AM389x Sitara™ ARM® Microprocessors (MPUs)

1 Device Overview

1.1 Features

- High-Performance Sitara ARM® Microprocessors (MPUs)
  - ARM Cortex™-A8 RISC Processor
    - Up to 1.20 GHz
- ARM Cortex-A8 Core
  - ARMv7 Architecture
    - In-Order, Dual-Issue, Superscalar Processor Core
    - NEON™ Multimedia Architecture
  - Supports Integer and Floating Point (VFPv3-IEEE754 Compliant)
    - Jazelle® RCT Execution Environment
- ARM Cortex-A8 Memory Architecture
  - 32-KB Instruction and Data Caches
  - 256-KB L2 Cache
  - 64-KB RAM, 48-KB of Boot ROM
- 512KB of On-Chip Memory Controller (OCMC) RAM
- SGX530 3D Graphics Engine (Available Only on the AM3894 Device)
  - Delivers up to 30 MTriangles per Second
  - Universal Scalable Shader Engine
  - Direct3D® Mobile, OpenGL® ES 1.1 and 2.0, OpenVG™ 1.1, OpenMax™ API Support
  - Advanced Geometry DMA Driven Operation
  - Programmable HQ Image Anti-Aliasing
- Endianness
  - ARM Instructions and Data – Little Endian
- HD Video Processing Subsystem (HDVPSS)
  - Two 165-MHz HD Video Capture Channels
    - One 16-Bit or 24-Bit and One 16-Bit Channel
    - Each Channel Splittable Into Dual 8-Bit Capture Channels
  - Two 165-MHz HD Video Display Channels
    - One 16-Bit, 24-Bit, 30-Bit Channel and One 16-Bit Channel
  - Simultaneous SD and HD Analog Output
  - Digital HDMI 1.3 Transmitter with PHY with HDCP up to 165-MHz Pixel Clock
  - Three Graphics Layers
- Dual 32-Bit DDR2 and DDR3 SDRAM Interfaces
  - Supports up to DDR2-800 and DDR3-1600
  - Up to Eight x8 Devices Total
  - 2GB of Total Address Space
  - Dynamic Memory Manager (DMM)
    - Programmable Multi-Zone Memory Mapping and Interleaving
    - Enables Efficient 2D Block Accesses
    - Supports Tiled Objects in 0°, 90°, 180°, or 270° Orientation and Mirroring
    - Optimizes Interlaced Accesses
- One PCI Express® (PCIe) 2.0 Port with Integrated PHY
  - Single Port with 1 or 2 Lanes at 5.0 GT per Second
  - Configurable as Root Complex or Endpoint
- Serial ATA (SATA) 3.0 Gbps Controller with Integrated PHYs
  - Direct Interface for Two Hard Disk Drives
  - Hardware-Assisted Native Command Queuing (NCQ) from up to 32 Entries
  - Supports Port Multiplier and Command-Based Switching
- Two 10 Mbps, 100 Mbps, and 1000 Mbps Ethernet MACs (EMAC)
  - IEEE 802.3 Compliant (3.3-V I/O Only)
  - MII and GMII Media Independent Interfaces
  - Management Data I/O (MDIO) Module
- Dual USB 2.0 Ports with Integrated PHYs
  - USB 2.0 High-Speed and Full-Speed Client
  - USB 2.0 High-Speed, Full-Speed, and Low-Speed Host
  - Supports Endpoints 0-15
- General-Purpose Memory Controller (GPMC)
  - 8-Bit and 16-Bit Multiplexed Address and Data Bus
  - Up to 6 Chip Selects with up to 256-MB Address Space per Chip Select Pin
  - Glueless Interface to NOR Flash, NAND Flash (with BCH and Hamming Error Code Detection), SRAM and Pseudo-SRAM
  - Error Locator Module (ELM) Outside of GPMC to Provide up to 16-Bit and 512-Byte Hardware ECC for NAND
  - Flexible Asynchronous Protocol Control for Interface to FPGA, CPLD, ASICs
- Enhanced Direct-Memory-Access (EDMA) Controller
  - Four Transfer Controllers

An IMPORTANT NOTICE at the end of this data sheet addresses availability, warranty, changes, use in safety-critical applications, intellectual property matters and other important disclaimers. PRODUCTION DATA.

  - 64 Independent DMA Channels and 8 Quick DMA (QDMA) Channels
- Seven 32-Bit General-Purpose Timers
- One System Watchdog Timer
- Three Configurable UART, IrDA, and CIR Modules
  - UART0 with Modem Control Signals
  - Supports up to 3.6864 Mbps UART
  - SIR, MIR, FIR (4.0 MBAUD), and CIR
- One 40-MHz Serial Peripheral Interface (SPI) with Four Chip Selects
- SD and SDIO Serial Interface (1-Bit and 4-Bit)
- Dual Inter-Integrated Circuit (I^2C bus®) Ports
- Three Multichannel Audio Serial Ports (McASPs)
  - One Six-Serializer Transmit and Receive Port
  - Two Dual-Serializer Transmit and Receive Ports
  - DIT-Capable For SDIF and PDIF (All Ports)
- Multichannel Buffered Serial Port (McBSP)
  - Transmit and Receive Clocks up to 48 MHz
  - Two Clock Zones and Two Serial Data Pins
  - Supports TDM, I2S, and Similar Formats
- Real-Time Clock (RTC)
  - One-Time or Periodic Interrupt Generation
- Up to 64 General-Purpose I/O (GPIO) Pins
- On-Chip ARM ROM Bootloader (RBL)
- Power, Reset, and Clock Management
  - SmartReflex™ Technology (Level 2)
  - Seven Independent Core Power Domains
  - Clock Enable and Disable Control For Subsystems and Peripherals
- IEEE 1149.1 (JTAG) and IEEE 1149.7 (cJTAG) Compatible
- Via Channel™ Technology Enables use of 0.8-mm Design Rules
- 40-nm CMOS Technology
- 3.3-V Single-Ended LVCMOS I/Os (Except for DDR3 at 1.5 V, DDR2 at 1.8 V, and DEV_CLKIN at 1.8 V)

Copyright © 2010–2015, Texas Instruments Incorporated

1.2 Applications

- Single-Board Computing
- Network and Communications Processing
- Industrial Automation
- Human Machine Interface
- Interactive Point-of-Service Kiosks

1.3 Description

The AM389x Sitara ARM processors are a highly integrated, programmable platform that leverages TI's Sitara technology to meet the processing needs of the following applications: single-board computing, network and communications processing, industrial automation, human machine interface, and interactive point-of-service kiosks.

The device enables original-equipment manufacturers (OEMs) and original-design manufacturers (ODMs) to quickly bring to market devices featuring robust operating systems support, rich user interfaces, and high processing performance through the maximum flexibility of a fully integrated mixed processor solution. The device combines high-performance ARM processing with a highly integrated peripheral set.

The ARM Cortex-A8 32-bit RISC processor with NEON floating-point extension includes: 32KB of instruction cache; 32KB of data cache; 256KB of L2 cache; and 64KB of RAM.

The rich peripheral set provides the ability to control external peripheral devices and communicate with external processors. For details on each peripheral, see the related sections in this document and the associated peripheral reference guides. The peripheral set includes: HD video processing subsystem (HDVPSS), which provides output of simultaneous HD and SD analog video and dual HD video inputs; up to two Gigabit Ethernet MACs (10 Mbps,100, Mbps, 1000 Mbps) with GMII and MDIO interface; two USB ports with integrated 2.0 PHY; PCIe port x2 lanes GEN2 compliant interface, which allows the device to act as a PCIe root complex or device endpoint; one 6-channel McASP audio serial port (with DIT mode); two dual-channel McASP audio serial ports (with DIT mode); one McBSP multichannel buffered serial port; three UARTs with IrDA and CIR support; SPI serial interface; SD and SDIO serial interface; two I^2C master and slave interfaces; up to 64 GPIO pins; seven 32-bit timers; system watchdog timer; dual DDR2 and DDR3 SDRAM interface; flexible 8-bit and 16-bit asynchronous memory interface; and up to two SATA interfaces for external storage on two disk drives or more with the use of a port multiplier.

The device also includes an SGX530 3D graphics engine (available only on the AM3894 device) to off-load many video and imaging processing tasks from the core. Additionally, the device has a complete set of development tools for the ARM, including C compilers and a Microsoft® Windows® debugger interface for visibility into source code execution.

The device package has been specially engineered with Via Channel technology. This technology allows use of 0.8-mm pitch PCB feature sizes in this 0.65-mm pitch package, and substantially reduces PCB costs. Via Channel technology also allows PCB routing in only two signal layers due to the increased layer efficiency of the Via Channel BGA technology.

Device Information

PART NUMBER	PACKAGE	BODY SIZE
AM3894CYG	FCBGA (1031)	25.0 mm x 25.0 mm
AM3892CYG	FCBGA (1031)	25.0 mm x 25.0 mm

Copyright © 2010–2015, Texas Instruments Incorporated

1.4 Functional Block Diagram

Figure 1-1 shows the functional block diagram of the device.

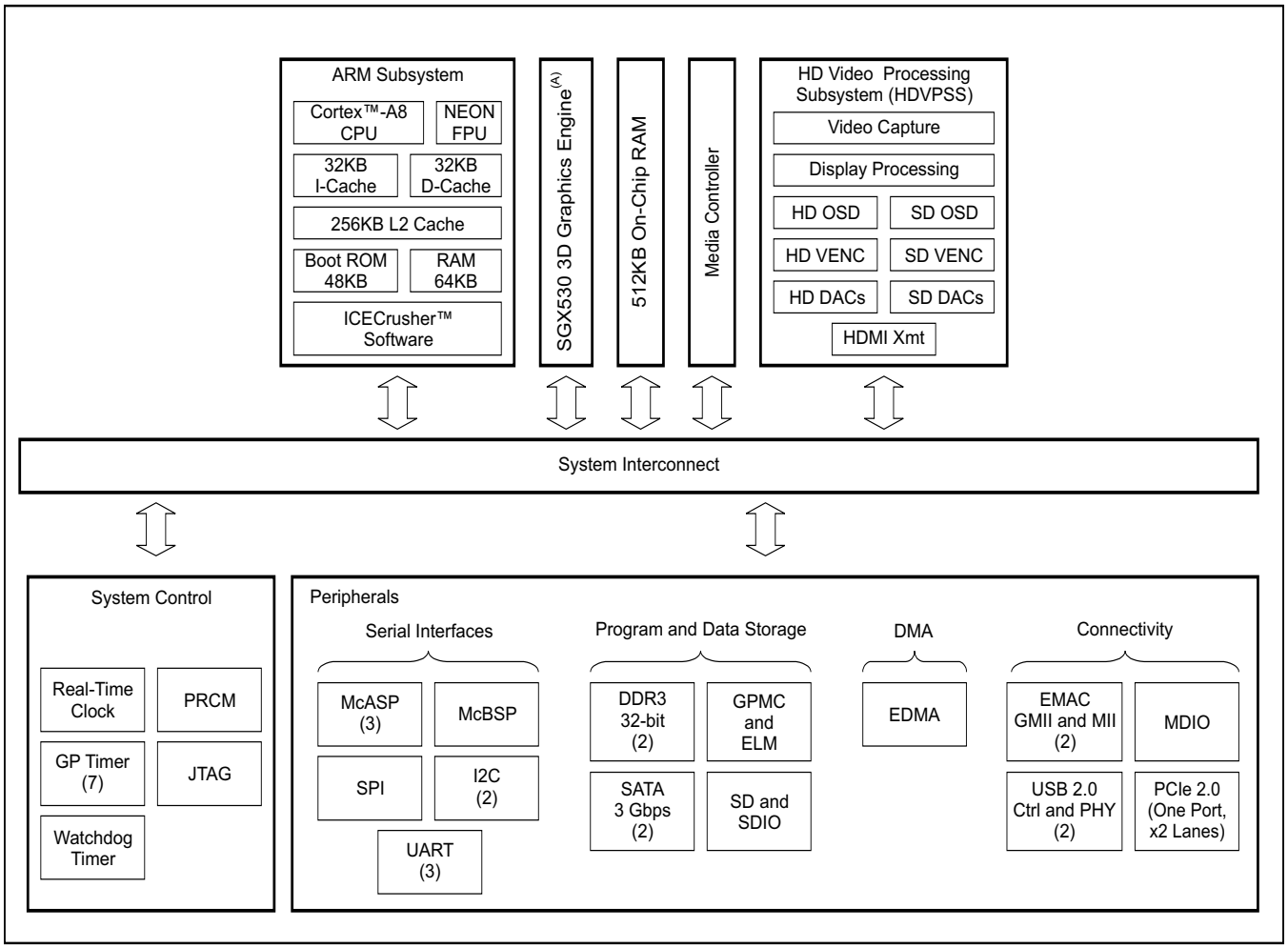

A. SGX530 is available only on the AM3894 device.

Figure 1-1. AM389x Device Functional Block Diagram

Copyright © 2010–2015, Texas Instruments Incorporated

Table of Contents

1 Device Overview **1**
1.1 Features 1
1.2 Applications 3
1.3 Description 3
1.4 Functional Block Diagram 4
2 Revision History **6**
3 Device Comparison **7**
3.1 Device Characteristics 8
3.2 ARM Subsystem 9
3.3 Media Controller 11
3.4 Inter-Processor Communication 11
3.5 Power, Reset and Clock Management (PRCM) Module 12
3.6 SGX530 (AM3894 only) 17
3.7 Memory Map Summary 18
4 Terminal Configuration and Functions **28**
4.1 Pin Assignments 28
4.2 Terminal Functions 46
5 Specifications **106**
5.1 Absolute Maximum Ratings (Unless Otherwise Noted) 106
5.2 ESD Ratings 106
5.3 Recommended Operating Conditions 107
Electrical Characteristics Over Recommended Ranges of Supply Voltage and Operating Temperature (Unless Otherwise Noted) 109
5.4 Thermal Resistance Characteristics 110
6 Device Configurations **111**
6.1 Control Module 111
6.2 Revision Identification 114
6.3 Debugging Considerations 114
6.4 Boot Sequence 115
6.5 Pin Multiplexing Control 117
6.6 How to Handle Unused Pins 124
7 System Interconnect **125**
7.1 L3 Interconnect 125
7.2 L4 Interconnect 128
8 Power, Reset, Clocking, and Interrupts **130**
8.1 Power Supplies 130
8.2 Reset 133
8.3 Clocking 138
8.4 Interrupts 151
9 Peripheral Information and Timings **159**
9.1 Parameter Information 159
9.2 Recommended Clock and Control Signal Transition Behavior 160
9.3 DDR2 and DDR3 Memory Controller 161
9.4 Emulation Features and Capability 197
9.5 Enhanced Direct Memory Access (EDMA) Controller 201
9.6 Ethernet Media Access Controller (EMAC) 207
9.7 General-Purpose Input and Output (GPIO) 216
9.8 General-Purpose Memory Controller (GPMC) and Error Locator Module (ELM) 219
9.9 High-Definition Multimedia Interface (HDMI) 240
9.10 High-Definition Video Processing Subsystem (HDVPSS) 249
9.11 Inter-Integrated Circuit (I2C) 256
9.12 Multichannel Audio Serial Port (McASP) 260
9.13 Multichannel Buffered Serial Port (McBSP) 268
9.14 Peripheral Component Interconnect Express (PCIe) 271
9.15 Real-Time Clock (RTC) 276
9.16 Secure Digital and Secure Digital Input Output (SD and SDIO) 278
9.17 Serial ATA Controller (SATA) 281
9.18 Serial Peripheral Interface (SPI) 285
9.19 Timers 292
9.20 Universal Asynchronous Receiver and Transmitter (UART) 295
9.21 Universal Serial Bus (USB2.0) 299
10 Device and Documentation Support **306**
10.1 Device Support 306
10.2 Documentation Support 307
10.3 Related Links 308
10.4 Community Resources 308
10.5 Trademarks 308
10.6 Electrostatic Discharge Caution 308
10.7 Glossary 308
11 Mechanical Packaging and Orderable Information **309**
11.1 Packaging Information 309

Copyright © 2010–2015, Texas Instruments Incorporated

2 Revision History

NOTE: Page numbers for previous revisions may differ from page numbers in the current version.

Changes from February 1, 2014 to March 17, 2015 (from F Revision (February 2014) to G Revision)	Page
• Updated/Changed title from "*...Sitara ARM Processors...*" to "*...Sitara ARM Microprocessors (MPUs)...*"	1
• Updated/Changed ARM® Cortex™-A8 RISC Processor in Features from "*Up to 1.35 GHz*" to "*Up to 1.20 GHz*"	1
• Removed Cycle Time row	9
• Updated/Changed Handling Ratings to ESD Ratings	106
• Updated/Changed CVDD Initial Startup NOM from "1.00 or 1.10" to "1.00 or **1.05**"	107
• Updated footnote from "1.10V nominal (for CYG..." to "**1.05** nominal (for CYG..."	108
• Removed FSYSCLK row	108
• Updated/Changed the System Clocking Overview Figure from "*432 MHz*" to "*audio reference clock*"	139
• Updated/Changed body of text in PLL Programming Limits	144
• Completely updated PLL Clock Frequencies table	145
• Completely updated SYSCLK Frequencies table	146
• Completely updated SYSCLK Frequencies table	147
• Updated/Changed $t_{su(CMDV-CLKH)}$ and $t_{h(CLKH-DATV)}$ MIN from "6.0" to "**4.1**"	279
• Updated/Changed $t_{h(CLKH-CMDIV)}$ and $t_{h(CLKH-DATV)}$ MIN from "19.2" to "**1.9**"	279
• Added footnote to $t_{d(CLKL-CMD)}$ and $t_{d(CLKL-DAT)}$ MIN values	280
• Updated/Changed the example from "*1.0-GHz ARM*" to "*930-MHz ARM*"	307
• Updated DEVICE SPEED RANGE in Figure 10-1	307

Copyright © 2010–2015, Texas Instruments Incorporated

3 Device Comparison

There are variations in the availability of some functions of the AM389x devices. A comparison of the devices, highlighting the differences, is shown in Table 3-1. For more detailed information on the significant device features, see Section 3.1, *Device Characteristics*.

Table 3-1. Device Comparison

FEATURES	DEVICES	
	AM3894	AM3892
SGX530	Y	N

3.1 Device Characteristics

Table 3-2 provides an overview of the significant features of the AM389x devices, including the capacity of on-chip RAM, peripherals, and the package type with pin count.

Table 3-2. Characteristics of the Processor

HARDWARE FEATURES		AM3894 and AM3892
Peripherals Not all peripherals pins are available at the same time (for more detail, see Section 6, *Device Configurations*).	HD Video Processing Subsystem (HDVPSS)	1 16-bit and 24-bit HD Capture Channel ***or*** 2 8-bit SD Capture Channels ***and*** 1 16-bit HD Capture Channel ***or*** 2 8-bit SD Capture Channels ***and*** 1 16-bit, 24-bit, and 32-bit HD Display Channel ***and*** 1 16-bit HD Display Channel ***and*** 3 HD and 4 SD Video DACs ***and*** 1 HDMI 1.3 Transmitter
	DDR2 and DDR3 Memory Controller	2 (32-bit Bus Widths)
	GPMC and ELM	Asynchronous (8-bit and 16-bit bus width) RAM, NOR, NAND
	EDMA	64 Independent Channels 8 QDMA Channels
	10 Mbps, 100 Mbps, and 1000 Mbps Ethernet MAC with Management Data Input and Output (MDIO)	2 (with MII and GMII Interface)
	USB 2.0	2 (Supports High-Speed and Full-Speed as a Device and High-Speed, Full-Speed, and Low-Speed as a Host)
	PCI Express 2.0	1 Port (2 5.0GT per second lanes)
	Timers	7 (32-bit General Purpose) ***and*** 1 (Watchdog)
	UART	3 (with SIR, MIR, CIR support and RTS and CTS flow control) (UART0 Supports Modem Interface)
	SPI	1 (Supports 4 slave devices)
	SD and SDIO	1 (1-bit or 4-bit)
	I2C	2 (Master or Slave)
	McASP	3 (1 Six-Serializer and 2 Dual Serializers, Each with Transmit and Receive and DIT Capability)
	McBSP	1 (2 Data Pins, Transmit and Receive)
	Serial ATA (SATA)	Supports 2 Interfaces
	RTC	1
	GPIO	Up to 64 pins
On-Chip Memory	Organization	**ARM** 32KB I-cache 32KB D-cache 256KB L2 Cache 64KB RAM 48KB Boot ROM
		MEDIA CONTROLLER 32KB Shared L1 Cache 256KB L2 RAM
		ADDITIONAL SHARED MEMORY 512KB On-chip RAM
CPU ID + CPU Rev ID	Control Status Register (CSR.[31:16])	0x1003
JTAG BSDL_ID	JTAGID Register	0x2B81 E02F

Copyright © 2010–2015, Texas Instruments Incorporated

Table 3-2. Characteristics of the Processor (continued)

HARDWARE FEATURES		AM3894 and AM3892
CPU Frequency	MHz	Up to 1350 MHz
Voltage	Core Logic (V)	1.0 V with Required AVS Capability
	USB Logic (V)	0.9 V
	RAM (V)	1.0 V
	IO (V)	1.5 V, 1.8 V, 3.3 V
Package	25 x 25 mm	1031-Pin BGA (CYG)
Process Technology	µm	0.04 µm
Product Status (1)	Product Preview (PP), Advance Information (AI), or Production Data (PD)	PD

(1) PRODUCTION DATA information is current as of publication date. Products conform to specifications per the terms of Texas Instruments standard warranty. Production processing does not necessarily include testing of all parameters.

3.2 ARM Subsystem

The ARM subsystem is designed to give the ARM Cortex-A8 master control of the device. In general, the ARM Cortex-A8 is responsible for configuration and control of the various subsystem, peripherals, and external memories.

The ARM subsystem includes the following features:

- ARM Cortex-A8 RISC processor:
  - ARMv7 ISA plus Thumb®-2, Jazelle-X, and media extensions
  - NEON floating-point unit
  - Enhanced memory management unit (MMU)
  - Little Endian
  - 32KB L1 instruction cache
  - 32KB L1 data cache
  - 256KB L2 cache
- Foresight embedded trace module (ETM)
- ARM Cortex-A8 interrupt controller (AINTC)
- 64KB internal RAM
- 48KB internal public ROM.

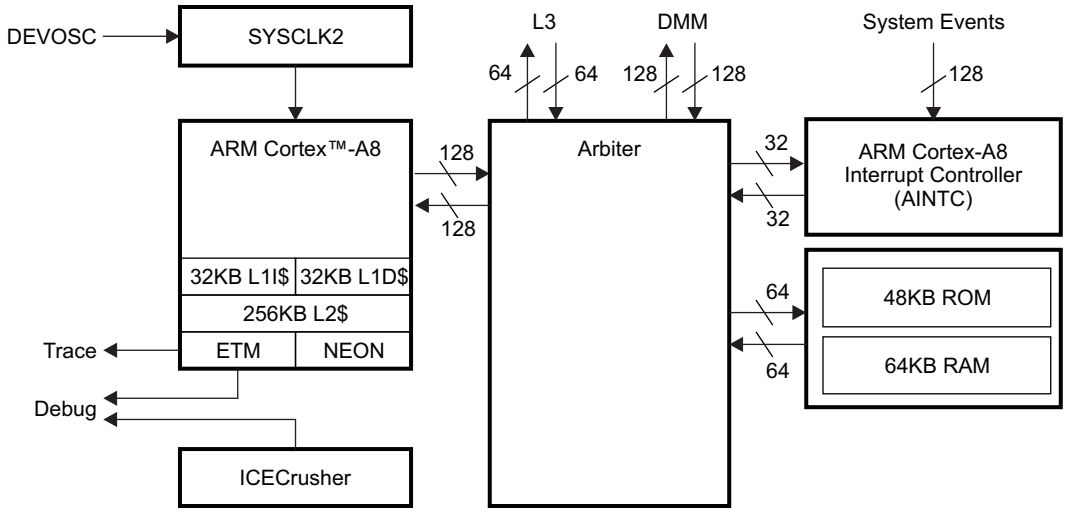

Figure 3-1. ARM Cortex-A8 Subsystem Block Diagram

3.2.1 ARM Cortex-A8 RISC Processor

The ARM Cortex-A8 subsystem integrates the ARM Cortex-A8 processor. The ARM Cortex-A8 processor is a member of ARM Cortex family of general-purpose processors. This processor is targeted at multi-tasking applications where full memory management, high performance, low die size, and low power are all important. The ARM Cortex-A8 processor supports the ARM debug architecture and includes logic to assist in both hardware and software debug. The ARM Cortex-A8 processor has a Harvard architecture and provides a complete high-performance subsystem, including:

- ARM Cortex-A8 integer core
- Superscalar ARMv7 instruction set
- Thumb-2 instruction set
- Jazelle RCT acceleration
- CP14 debug coprocessor
- CP15 system control coprocessor
- NEON 64-bit and 128-bit hybrid SIMD engine for multimedia
- Enhanced memory management unit (MMU)
- Separate level-1 instruction and data caches
- Integrated level-2 cache
- 128-bit interconnect to system memories and peripherals
- Embedded trace module (ETM).

3.2.2 Embedded Trace Module (ETM)

To support real-time trace, the ARM Cortex-A8 processor provides an interface to enable connection of an embedded trace module (ETM). The ETM consists of two parts:

- The Trace port provides real-time trace capability for the ARM Cortex-A8.
- Triggering facilities provide trigger resources, which include address and data comparators, counter, and sequencers.

The ARM Cortex-A8 trace port is connected to the system-level embedded trace buffer (ETB). The ETB has a 32KB buffer memory. ETB enabled debug tools are required to read and interpret the captured trace data.

For more details on the ETB, see Section 9.4.2.

3.2.3 ARM Cortex-A8 Interrupt Controller (AINTC)

The ARM Cortex-A8 subsystem contains an interrupt controller (AINTC) that prioritizes all service requests from the system peripherals and generates either IRQ or FIQ to the ARM Cortex-A8 processor. For more details on the AINTC, see Section 8.4.

3.2.4 System Interconnect

The ARM Cortex-A8 processor in connected through the arbiter to both an L3 interconnect port and a DMM port. The DMM port is 128-bits wide and provides the ARM Cortex-A8 direct access to the DDR memories, while the L3 interconnect port is 64-bits wide and provides access to the remaining device modules.

Copyright © 2010–2015, Texas Instruments Incorporated

3.3 Media Controller

The Media Controller has the responsibility of managing the HDVPSS module.

3.4 Inter-Processor Communication

This device is a multi-core device that requires software to efficiently manage and communicate between the cores. The following are the main features that need to be implemented by such software:

1. Device management of the slave processors from the host processor.
2. Inter-processor communication between the cores for transfer and exchange of information between them.

For implementing efficient inter-processor communication between the multiple cores on the device, the following hardware features are provided:

- Mailbox interrupts
- Hardware spinlocks

Mailboxes provide a mechanism for one processor to write a value to a register and send an interrupt to another processor. Spinlocks facilitate access to shared resources in the system.

3.4.1 Mailbox Module

The device Mailbox module facilitates communication between the ARM Cortex-A8 and the Media Controller. It consists of twelve mailboxes, each supporting communication between two of the above processors. The sender sends information to the receiver by writing a message to the mailbox registers. Interrupt signaling is used to notify the receiver that a message has been queued or to notify the sender about an overflow situation.

The Mailbox module supports the following features (see Figure 3-2):

- 12 mailboxes
- Four-message FIFO depth for each message queue
- 32-bit message width
- Message reception and queue-not-full notification using interrupts
- Three interrupts (one to ARM Cortex-A8, two to Media Controller).

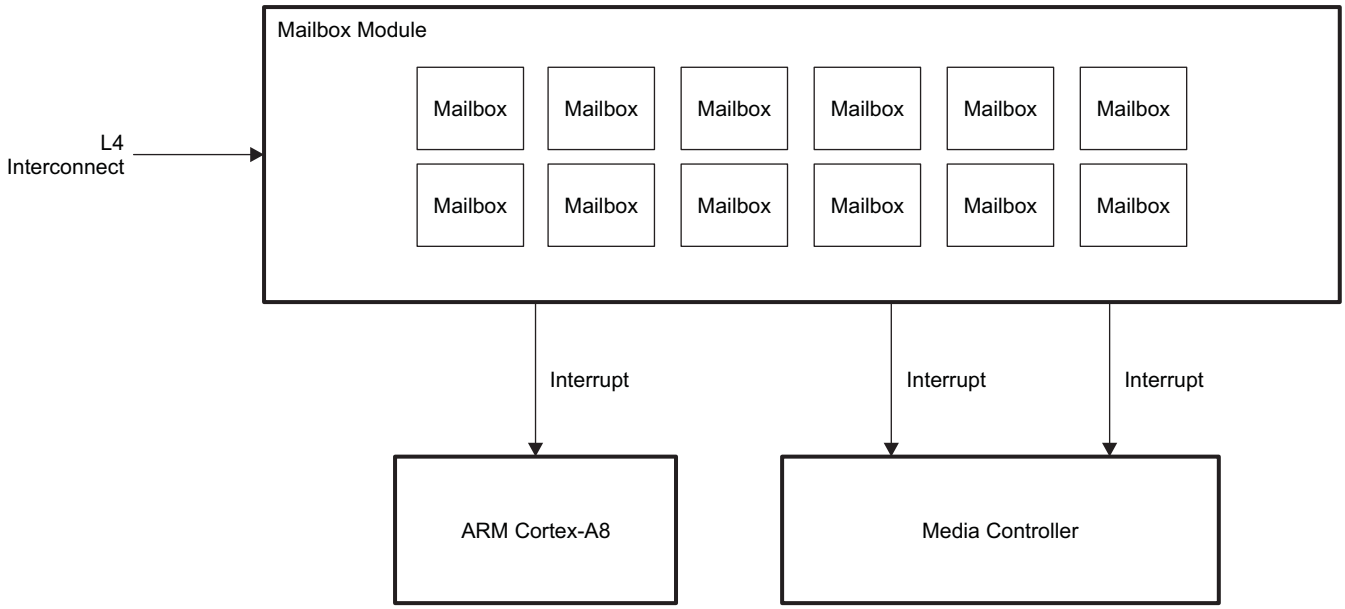

Figure 3-2. Mailbox Module Block Diagram

3.4.1.1 Mailbox Registers

Table 3-3 lists the Mailboxes available on this device. The register set below is applicable to these mailboxes. Table 3-4 lists the Mailbox registers.

Table 3-3. Mailboxes

MAILBOX TYPE	USER NUMBER (u)	MAILBOX NUMBER (m)	MESSAGES PER MAILBOX
System Mailbox	0 to 3	0 to 11	4

Table 3-4. Mailbox Registers Summary(1)

HEX ADDRESS	ACRONYM	REGISTER NAME
0x480C 8000	MAILBOX_REVISION	Mailbox Revision
0x480C 8010	MAILBOX_SYSCONFIG	Mailbox System Configuration
0x480C 8040 + (0x4 * m)	MAILBOX_MESSAGE_m	Mailbox Message
0x480C 8080 + (0x4 * m)	MAILBOX_FIFOSTATUS_m	Mailbox FIFO Status
0x480C 80C0 + (0x4 * m)	MAILBOX_MSGSTATUS_m	Mailbox Message Status
0x480C 8100 + (0x10 * u)	MAILBOX_IRQSTATUS_RAW_u	Mailbox IRQ RAW Status
0x480C 8104 + (0x10 * u)	MAILBOX_IRQSTATUS_CLR_u	Mailbox IRQ Clear Status
0x480C 8108 + (0x10 * u)	MAILBOX_IRQENABLE_SET_u	Mailbox IRQ Enable Set
0x480C 810C + (0x10 * u)	MAILBOX_IRQENABLE_CLR_u	Mailbox IRQ Enable Clear
0x480C 8140	-	Reserved

(1) For the range of m and u, see Table 3-3.

3.4.2 Spinlock Module

The Spinlock module provides hardware assistance for synchronizing the processes running on multiple processors in the device:

- ARM Cortex-A8 processor
- Media Controller processors.

The Spinlock module implements 64 spinlocks (or hardware semaphores) that provide an efficient way to perform a lock operation of a device resource using a single read-access, avoiding the need for a read-modify-write bus transfer of which the programmable cores are not capable.

3.4.2.1 Spinlock Registers

Table 3-5. Spinlock Registers Summary(1)

HEX ADDRESS	ACRONYM	REGISTER NAME
0x480C A000	SPINLOCK_REV	Revision
0x480C A010h	SPINLOCK_SYSCFG	System Configuration
0x480C A014h	SPINLOCK_SYSSTAT	System Status
0x480C A800 + (0x4*i)	SPINLOCK_LOCK_REG_i	Lock

(1) i = 0 to 63

3.5 Power, Reset and Clock Management (PRCM) Module

The PRCM module is the centralized management module for the power, reset, and clock control signals of the device. It interfaces with all the components on the device for power, clock, and reset management through power-control signals. It integrates enhanced features to allow the device to adapt energy consumption dynamically, according to changing application and performance requirements. The innovative hardware architecture allows a substantial reduction in leakage current.

The PRCM module is composed of two main entities:

Copyright © 2010–2015, Texas Instruments Incorporated

- Power reset manager (PRM): Handles the power, reset, wake-up management, and system clock source control (oscillator)
- Clock manager (CM): Handles the clock generation, distribution, and management.

Table 3-6 lists the physical addresses of the PRM and CM modules. Table 3-7 through Table 3-18 provide register mapping summaries of the PRM and CM registers.

For more details on the PRCM, see Section 8 of this data sheet, *Power, Reset, Clocking and Interrupts*, and the PRCM chapter of the *AM389x Sitara ARM Processors Technical Reference Manual* (literature number SPRUGX7).

Table 3-6. PRCM Register Address Summary

ADDRESS OFFSET	MODULE NAME	SIZE	SEE
0x0000	PRM_DEVICE	256 Bytes	Table 3-7
0x0100	CM_DEVICE	256 Bytes	Table 3-8
0x0300	CM_DPLL	256 Bytes	Table 3-10
0x0400	CM_ACTIVE	256 Bytes	Table 3-11
0x0500	CM_DEFAULT	256 Bytes	Table 3-12
0x0900	CM_SGX	256 Bytes	Table 3-13
0x0A00	PRM_ACTIVE	256 Bytes	Table 3-14
0x0B00	PRM_DEFAULT	256 Bytes	Table 3-15
0x0F00	PRM_SGX	256 Bytes	Table 3-16
0x1400	CM_ALWON	1 KBytes	Table 3-17
0x1800	PRM_ALWON	1 KBytes	Table 3-18

Table 3-7. PRM_DEVICE Register Summary

HEX ADDRESS	ACRONYM	REGISTER NAME
0x4818 00A0	PRM_RSTCTRL	Global software cold and warm reset control
0x4818 00A4	PRM_RSTTIME	Reset duration control
0x4818 00A8	PRM_RSTST	Global reset sources log

Table 3-8. CM_DEVICE Register Summary

HEX ADDRESS	ACRONYM	REGISTER NAME
0x4818 0100	CM_CLKOUT_CTRL	SYS_CCCLKOUT output control

Table 3-9. OCP_SOCKET_PRM Register Summary

HEX ADDRESS	ACRONYM	REGISTER NAME
0x4818 0200	REVISION_PRM	PRCM IP revision code

Table 3-10. CM_DPLL Register Summary

HEX ADDRESS	ACRONYM	REGISTER NAME
0x4818 0300	CM_SYSCLK1_CLKSEL	SYSCLK1 clock divider value select
0x4818 0304	CM_SYSCLK2_CLKSEL	SYSCLK2 clock divider value select
0x4818 0308	CM_SYSCLK3_CLKSEL	SYSCLK3 clock divider value select
0x4818 030C	CM_SYSCLK4_CLKSEL	SYSCLK4 clock divider value select
0x4818 0310	CM_SYSCLK5_CLKSEL	SYSCLK5 clock divider value select
0x4818 0314	CM_SYSCLK6_CLKSEL	SYSCLK6 clock divider value select
0x4818 0318	CM_SYSCLK7_CLKSEL	SYSCLK7 clock divider value select
0x4818 0324	CM_SYSCLK10_CLKSEL	SYSCLK10 clock divider value select
0x4818 032C	CM_SYSCLK11_CLKSEL	SYSCLK11 clock divider value select

Copyright © 2010–2015, Texas Instruments Incorporated

Table 3-10. CM_DPLL Register Summary (continued)

HEX ADDRESS	ACRONYM	REGISTER NAME
0x4818 0334	CM_SYSCLK13_CLKSEL	SYSCLK13 clock divider value select
0x4818 0338	CM_SYSCLK15_CLKSEL	SYSCLK15 clock divider value select
0x4818 0340	CM_VPB3_CLKSEL	Video PLL B3 clock divider value select
0x4818 0344	CM_VPC1_CLKSEL	Video PLL C1 clock divider value select
0x4818 0348	CM_VPD1_CLKSEL	Video PLL D1 clock divider value select
0x4818 034C	CM_SYSCLK19_CLKSEL	SYSCLK19 clock divider value select
0x4818 0350	CM_SYSCLK20_CLKSEL	SYSCLK20 clock divider value select
0x4818 0354	CM_SYSCLK21_CLKSEL	SYSCLK21 clock divider value select
0x4818 0358	CM_SYSCLK22_CLKSEL	SYSCLK22 clock divider value select
0x4818 035C	CM_APA_CLKSEL	Audio PLL A clock divider value select
0x4818 0370	CM_SYSCLK14_CLKSEL	SYSCLK14 clock mux select line
0x4818 0374	CM_SYSCLK16_CLKSEL	SYSCLK16 clock mux select line
0x4818 0378	CM_SYSCLK18_CLKSEL	SYSCLK18 clock mux select line
0x4818 037C	CM_AUDIOCLK_MCASP0_CLKSEL	McASP0 audio clock mux select line
0x4818 0380	CM_AUDIOCLK_MCASP1_CLKSEL	McASP1 audio clock mux select line
0x4818 0384	CM_AUDIOCLK_MCASP2_CLKSEL	McASP2 audio clock mux select line
0x4818 0388	CM_AUDIOCLK_MCBSP_CLKSEL	McBSP audio clock mux select line
0x4818 0390	CM_TIMER1_CLKSEL	Timer1 clock mux select line
0x4818 0394	CM_TIMER2_CLKSEL	Timer2 clock mux select line
0x4818 0398	CM_TIMER3_CLKSEL	Timer3 clock mux select line
0x4818 039C	CM_TIMER4_CLKSEL	Timer4 clock mux select line
0x4818 03A0	CM_TIMER5_CLKSEL	Timer5 clock mux select line
0x4818 03A4	CM_TIMER6_CLKSEL	Timer6 clock mux select line
0x4818 03A8	CM_TIMER7_CLKSEL	Timer7 clock mux select line
0x4818 03B0	CM_SYSCLK23_CLKSEL	SYSCLK23 clock divider value select
0x4818 03B4	CM_SYSCLK24_CLKSEL	SYSCLK24 clock divider value select

Table 3-11. CM_ACTIVE Register Summary

HEX ADDRESS	ACRONYM	REGISTER NAME
0x4818 0404	CM_HDDSS_CLKSTCTRL	HDVPSS clock domain power state transition
0x4818 0408	CM_HDMI_CLKSTCTRL	HDMI clock domain power state transition
0x4818 0424	CM_ACTIVE_HDDSS_CLKCTRL	HDVPSS clock management control
0x4818 0428	CM_ACTIVE_HDMI_CLKCTRL	HDMI clock management control

Table 3-12. CM_DEFAULT Register Summary

HEX ADDRESS	ACRONYM	REGISTER NAME
0x4818 0504	CM_DEFAULT_L3_MED_CLKSTCTRL	L3 clock domain power state transition
0x4818 0508	CM_DEFAULT_L3_FAST_CLKSTCTRL	L3 clock domain power state transition
0x4818 0510	CM_DEFAULT_PCI_CLKSTCTRL	PCI clock domain power state transition
0x4818 0514	CM_DEFAULT_L3_SLOW_CLKSTCTRL	L3 clock domain power state transition
0x4818 0520	CM_DEFAULT_EMIF_0_CLKCTRL	EMIF0 clock management control
0x4818 0524	CM_DEFAULT_EMIF_1_CLKCTRL	EMIF1 clock management control
0x4818 0528	CM_DEFAULT_DMM_CLKCTRL	DMM clock management control
0x4818 052C	CM_DEFAULT_FW_CLKCTRL	EMIF FW clock management control
0x4818 0558	CM_DEFAULT_USB_CLKCTRL	USB clock management control
0x4818 0560	CM_DEFAULT_SATA_CLKCTRL	SATA clock management control
0x4818 0578	CM_DEFAULT_PCI_CLKCTRL	PCI clock management control

Copyright © 2010–2015, Texas Instruments Incorporated

Table 3-13. CM_SGX Register Summary

HEX ADDRESS	ACRONYM	REGISTER NAME
0x4818 0900	CM_SGX_CLKSTCTRL	SGX530 clock domain power state transition
0x4818 0920	CM_SGX_SGX_CLKCTRL	SGX530 clock management control

Table 3-14. PRM_ACTIVE Register Summary

HEX ADDRESS	ACRONYM	REGISTER NAME
0x4818 0A00	PM_ACTIVE_PWRSTCTRL	Active power state control
0x4818 0A04	PM_ACTIVE_PWRSTST	Active power domain state status
0x4818 0A10	RM_ACTIVE_RSTCTRL	Active domain reset control release
0x4818 0A14	RM_ACTIVE_RSTST	Active domain reset source log

Table 3-15. PRM_DEFAULT Register Summary

HEX ADDRESS	ACRONYM	REGISTER NAME
0x4818 0B00	PM_DEFAULT_PWRSTCTRL	Default power state
0x4818 0B04	PM_DEFAULT_PWRSTST	Default power domain state 0 status
0x4818 0B10	RM_DEFAULT_RSTCTRL	Default subsystem reset control release
0x4818 0B14	RM_DEFAULT_RSTST	Default domain reset source log

Table 3-16. PRM_SGX Register Summary

HEX ADDRESS	ACRONYM	REGISTER NAME
0x4818 0F00	PM_SGX_PWRSTCTRL	SGX530 power state control
0x4818 0F04	RM_SGX_RSTCTRL	SGX530 domain reset control release
0x4818 0F10	PM_SGX_PWRSTST	SGX530 power domain state status
0x4818 0F14	RM_SGX_RSTST	SGX530 domain reset source log

Table 3-17. CM_ALWON Register Summary

HEX ADDRESS	ACRONYM	REGISTER NAME
0x4818 1400	CM_ALWON_L3_SLOW_CLKSTCTRL	L3 clock domain power state transition
0x4818 1404	CM_ETHERNET_CLKSTCTRL	EMAC clock domain power state transition
0x4818 1408	CM_ALWON_L3_MED_CLKSTCTRL	L3 clock domain power state transition
0x4818 1414	CM_ALWON_OCMC_0_CLKSTCTRL	OCMC 0 clock domain power state transition
0x4818 1418	CM_ALWON_OCMC_1_CLKSTCTRL	OCMC 1 clock domain power state transition
0x4818 141C	CM_ALWON_MPU_CLKSTCTRL	Processor clock domain power state transition
0x4818 1420	CM_ALWON_SYSCLK4_CLKSTCTRL	SYSCLK4 clock domain power state transition
0x4818 1424	CM_ALWON_SYSCLK5_CLKSTCTRL	SYSCLK5 clock domain power state transition
0x4818 1428	CM_ALWON_SYSCLK6_CLKSTCTRL	SYSCLK6 clock domain power state transition
0x4818 142C	CM_ALWON_RTC_CLKSTCTRL	RTC clock domain power state transition
0x4818 1430	CM_ALWON_L3_FAST_CLKSTCTRL	L3 clock domain power state transition
0x4818 1540	CM_ALWON_MCASP0_CLKCTRL	McASP 0 clock management control
0x4818 1544	CM_ALWON_MCASP1_CLKCTRL	McASP 1 clock management control
0x4818 1548	CM_ALWON_MCASP2_CLKCTRL	McASP 2 clock management control
0x4818 154C	CM_ALWON_MCBSP_CLKCTRL	McBSP clock management control
0x4818 1550	CM_ALWON_UART_0_CLKCTRL	UART 0 clock management control
0x4818 1554	CM_ALWON_UART_1_CLKCTRL	UART 1 clock management control
0x4818 1558	CM_ALWON_UART_2_CLKCTRL	UART 2 clock management control
0x4818 155C	CM_ALWON_GPIO_0_CLKCTRL	GPIO 0 clock management control
0x4818 1560	CM_ALWON_GPIO_1_CLKCTRL	GPIO 1 clock management control

Copyright © 2010–2015, Texas Instruments Incorporated

Table 3-17. CM_ALWON Register Summary (continued)

HEX ADDRESS	ACRONYM	REGISTER NAME
0x4818 1564	CM_ALWON_I2C_0_CLKCTRL	I2C 0 clock management control
0x4818 1568	CM_ALWON_I2C_1_CLKCTRL	I2C 1 clock management control
0x4818 1570	CM_ALWON_TIMER_1_CLKCTRL	Timer1 clock management control
0x4818 1574	CM_ALWON_TIMER_2_CLKCTRL	Timer2 clock management control
0x4818 1578	CM_ALWON_TIMER_3_CLKCTRL	Timer3 clock management control
0x4818 157C	CM_ALWON_TIMER_4_CLKCTRL	Timer4 clock management control
0x4818 1580	CM_ALWON_TIMER_5_CLKCTRL	Timer5 clock management control
0x4818 1584	CM_ALWON_TIMER_6_CLKCTRL	Timer6 clock management control
0x4818 1588	CM_ALWON_TIMER_7_CLKCTRL	Timer7 clock management control
0x4818 158C	CM_ALWON_WDTIMER_CLKCTRL	WDTIMER clock management control
0x4818 1590	CM_ALWON_SPI_CLKCTRL	SPI clock management control
0x4818 1594	CM_ALWON_MAILBOX_CLKCTRL	MAILBOX clock management control
0x4818 1598	CM_ALWON_SPINBOX_CLKCTRL	SPINBOX clock management control
0x4818 15B0	CM_ALWON_SDIO_CLKCTRL	SDIO clock management control
0x4818 15B4	CM_ALWON_OCMC_0_CLKCTRL	OCMC 0 clock management control
0x4818 15B8	CM_ALWON_OCMC_1_CLKCTRL	OCMC 1 clock management control
0x4818 15C4	CM_ALWON_CONTROL_CLKCTRL	Control clock management control
0x4818 15D0	CM_ALWON_GPMC_CLKCTRL	GPMC clock management control
0x4818 15D4	CM_ALWON_ETHERNET_0_CLKCTRL	Ethernet 0 clock management control
0x4818 15D8	CM_ALWON_ETHERNET_1_CLKCTRL	Ethernet 1 clock management control
0x4818 15DC	CM_ALWON_MPU_CLKCTRL	Processor clock management control
0x4818 15E0	CM_ALWON_DEBUGSS_CLKCTRL	Debug clock management control
0x4818 15E4	CM_ALWON_L3_CLKCTRL	L3 clock management control
0x4818 15E8	CM_ALWON_L4HS_CLKCTRL	L4 high-speed clock management control
0x4818 15EC	CM_ALWON_L4LS_CLKCTRL	L4 standard-speed clock management control
0x4818 15F0	CM_ALWON_RTC_CLKCTRL	RTC clock management control
0x4818 15F4	CM_ALWON_TPCC_CLKCTRL	TPCC clock management control
0x4818 15F8	CM_ALWON_TPTC0_CLKCTRL	TPTC0 clock management control
0x4818 15FC	CM_ALWON_TPTC1_CLKCTRL	TPTC1 clock management control
0x4818 1600	CM_ALWON_TPTC2_CLKCTRL	TPTC2 clock management control
0x4818 1604	CM_ALWON_TPTC3_CLKCTRL	TPTC3 clock management control
0x4818 1608	CM_ALWON_SR_0_CLKCTRL	SmartReflex 0 clock management control
0x4818 160C	CM_ALWON_SR_1_CLKCTRL	SmartReflex 1 clock management control
0x4818 1628	CM_ALWON_CUST_EFUSE_CLKCTRL	Customer e-Fuse clock management control

Table 3-18. PRM_ALWON Register Summary

HEX ADDRESS	ACRONYM	REGISTER NAME
0x4818 1810	RM_ALWON_RSTCTRL	ALWAYS ON domain resets control
0x4818 1814	RM_ALWON_RSTST	ALWAYS ON reset sources

Copyright © 2010–2015, Texas Instruments Incorporated

3.6 SGX530 (AM3894 only)

The SGX530 is a vector and 3D graphics accelerator for vector and 3-dimensional (3D) graphics applications. The SGX530 graphics accelerator efficiently processes a number of various multimedia data types concurrently:

- Pixel data
- Vertex data
- Video data.

This is achieved using a multi-threaded architecture using two levels of scheduling and data partitioning enabling zero overhead task switching.

The SGX530 has the following major features:

- Vector graphics and 3D graphics.
- Tile-based architecture.
- Universal Scalable Shader Engine (USSE) - multi-threaded engine incorporating pixel and vertex shader functionality.
- Advanced shader feature set - in excess of Microsoft VS3.0, PS3.0, and OpenGL 2.0.
- Industry standard API support - OpenGL ES 1.1 and 2.0, OpenVG v1.1.
- Fine-grained task switching, load balancing, and power management.
- Advanced geometry direct memory access (DMA) driven operation for minimum CPU interaction.
- Programmable high-quality image anti-aliasing.
- PowerVR® SGX core MMU for address translation from the core virtual address to the external physical address (up to 4GB address range).
- Fully-virtualized memory addressing for OS operation in a unified memory architecture.
- Advanced and standard 2D operations [for example, vector graphics, block level transfers (BLTs), raster operations (ROPs)].

Copyright © 2010–2015, Texas Instruments Incorporated

3.7 Memory Map Summary

The device has multiple on-chip memories associated with its processors and various subsystems. To help simplify software development a unified memory map is used where possible to maintain a consistent view of device resources across all bus masters.

The device system memory mapping is broken into four 1-GB quadrants for target address spaces allocation. The four quadrants are labeled Q0, Q1, Q2 and Q3 for a total of 4-GB 32-bit address space. (HDVPSS includes a thirty-third address bit for an additional 4GB of address range; this is for virtual addressing and not physical memory addressing.) Inside each quadrant, system targets are mapped on 4-MB boundary (except EDMA targets which are decreased to 1-MB regions).

3.7.1 L3 Memory Map

The L3 high-performance interconnect is based on a Network-on-Chip (NoC) interconnect infrastructure. The NoC uses an internal packet-based protocol for forward (read command, write command with data payload) and backward (read response with data payload, write response) transactions. All exposed interfaces of this NoC interconnect, both for targets and initiators, comply with the OCPIP2.2 reference standard.

Table 3-19 shows the general device level-3 (L3) memory map. The table represents the physical addresses used by the L3 infrastructure. Some processors within the device (such as Cortex™-A8 ARM) may re-map these targets to different virtual addresses through an internal or external MMU. Processors without MMUs and other bus masters use these physical addresses to access L3 regions. Note that not all masters have access to all L3 regions, but only those with defined connectivity, as shown in Table 7-1. For a list of the specific peripherals attached to each of the Level-4 (L4) peripheral ports see Section 7.2. The L3 interconnect returns an address-hole error if any initiator attempts to access a target to which it has no connection.

Table 3-19. L3 Memory Map

QUAD	BLOCK NAME	START ADDRESS (HEX)	END ADDRESS (HEX)	SIZE	DESCRIPTION
Q0	GPMC	0x0100 0000	0x1FFF FFFF	496MB	GPMC[(1)]
Q0	PCIe Gen2	0x2000 0000	0x2FFF FFFF	256MB	PCIe Gen2 Targets
Q0	Reserved	0x3000 0000	0x3FFF FFFF	256MB	Reserved
Q1	Reserved	0x4000 0000	0x402F FFFF	3MB	Reserved
Q1	L3 OCMC0	0x4030 0000	0x4033 FFFF	256KB	OCMC SRAM
Q1	Reserved	0x4034 0000	0x403F FFFF	768KB	Reserved (OCMC RAM0)
Q1	L3 OCMC1	0x4040 0000	0x4043 FFFF	256KB	OCMC SRAM
Q1	Reserved	0x4044 0000	0x404F FFFF	768KB	Reserved (OCMC RAM1)
Q1	Reserved	0x4050 0000	0x407F FFFF	3MB	Reserved
Q1	Reserved	0x4080 0000	0x4083 FFFF	256KB	Reserved
Q1	Reserved	0x4084 0000	0x40DF FFFF	5888KB	Reserved
Q1	Reserved	0x40E0 0000	0x40E0 7FFF	32KB	Reserved
Q1	Reserved	0x40E0 8000	0x40EF FFFF	992KB	Reserved
Q1	Reserved	0x40F0 0000	0x40F0 7FFF	32KB	Reserved
Q1	Reserved	0x40F0 8000	0x40FF FFFF	992KB	Reserved
Q1	Reserved	0x4100 0000	0x41FF FFFF	16MB	Reserved
Q1	Reserved	0x4200 0000	0x43FF FFFF	32MB	Reserved
Q1	L3 CFG Regs	0x4400 0000	0x44BF FFFF	12MB	L3 configuration registers
Q1	Reserved	0x44C0 0000	0x45FF FFFF	20MB	Reserved

Copyright © 2010–2015, Texas Instruments Incorporated

Table 3-19. L3 Memory Map (continued)

QUAD	BLOCK NAME	START ADDRESS (HEX)	END ADDRESS (HEX)	SIZE	DESCRIPTION
Q1	McASP0	0x4600 0000	0x463F FFFF	4MB	McASP0 DAT Port Access[(2)]
Q1	McASP1	0x4640 0000	0x467F FFFF	4MB	McASP1 DAT Port Access[(2)]
Q1	McASP2	0x4680 0000	0x46BF FFFF	4MB	McASP2 DAT Port Access[(2)]
Q1	HDMI 1.3 Tx	0x46C0 0000	0x46FF FFFF	4MB	HDMI 1.3 Tx
Q1	McBSP	0x4700 0000	0x473F FFFF	4MB	McBSP
Q1	USB2.0	0x4740 0000	0x477F FFFF	4MB	USB2.0 Registers and CPPI
Q1	Reserved	0x4780 0000	0x47BF FFFF	4MB	Reserved
Q1	Reserved	0x47C0 0000	0x47FF FFFF	4MB	Reserved
Q1	L4 Standard domain	0x4800 0000	0x48FF FFFF	16MB	Standard Peripheral domain (see Table 3-20)
Q1	EDMA TPCC	0x4900 0000	0x490F FFFF	1MB	EDMA TPCC Registers
Q1	Reserved	0x4910 0000	0x497F FFFF	7MB	Reserved
Q1	EDMA TPTC0	0x4980 0000	0x498F FFFF	1MB	EDMA TPTC0 Registers
Q1	EDMA TPTC1	0x4990 0000	0x499F FFFF	1MB	EDMA TPTC1 Registers
Q1	EDMA TPTC2	0x49A0 0000	0x49AF FFFF	1MB	EDMA TPTC2 Registers
Q1	EDMA TPTC3	0x49B0 0000	0x49BF FFFF	1MB	EDMA TPTC3 Registers
Q1	Reserved	0x49C0 0000	0x49FF FFFF	4MB	Reserved
Q1	L4 High-Speed Domain	0x4A00 0000	0x4AFF FFFF	16MB	High-Speed Peripheral domain (see Table 3-21)
Q1	Instrumentation	0x4B00 0000	0x4BFF FFFF	16MB	EMU Subsystem region
Q1	DDR EMIF0 registers[(3)]	0x4C00 0000	0x4CFF FFFF	16MB	Configuration registers
Q1	DDR EMIF1 registers[(3)]	0x4D00 0000	0x4DFF FFFF	16MB	Configuration registers
Q1	DDR DMM Registers[(3)]	0x4E00 0000	0x4FFF FFFF	32MB	Configuration registers
Q1	GPMC Registers	0x5000 0000	0x50FF FFFF	16MB	Configuration registers
Q1	PCIe Gen2 Registers	0x5100 0000	0x51FF FFFF	16MB	Configuration registers
Q1	Reserved	0x5200 0000	0x54FF FFFF	48MB	Reserved
Q1	Reserved	0x5500 0000	0x55FF FFFF	16MB	Reserved
Q1	SGX530 AM3894 only)	0x5600 0000	0x56FF FFFF	16MB	SGX530 Slave Port
Q1	Reserved (AM3892 only)	0x5600 0000	0x56FF FFFF	16MB	Reserved
Q1	Reserved	0x5700 0000	0x57FF FFFF	16MB	Reserved
Q1	Reserved	0x5800 0000	0x5BFF FFFF	64MB	Reserved
Q1	Reserved	0x5C00 0000	0x5DFF FFFF	32MB	Reserved
Q1	Reserved	0x5E00 0000	0x5FFF FFFF	32MB	Reserved
Q1	Tiler	0x6000 0000	0x7FFF FFFF	512MB	Virtual Tiled Address Space

Copyright © 2010–2015, Texas Instruments Incorporated

Table 3-19. L3 Memory Map (continued)

QUAD	BLOCK NAME	START ADDRESS (HEX)	END ADDRESS (HEX)	SIZE	DESCRIPTION
Q2	DDR EMIF0 and EMIF1 SDRAM(4)	0x8000 0000	0xBFFF FFFF	1GB	DDR
Q3	DDR EMIF0 and EMIF1 SDRAM(4)	0xC000 0000	0xFFFF FFFF	1GB	DDR
Q4-7	DDR DMM	0x1 0000 0000	0x1 FFFF FFFF	4GB	DDR DMM Tiler Extended address map – Virtual Views (HDVPSS only)

(1) The first section of GPMC memory (0x0 - 0x00FF_FFFF) is reserved for BOOTROM. Accessible memory starts at location 0x0100_0000.

(2) For more information about McASP registers accessed through the DAT port, see Table 9-78.

(3) These accesses occur through the DDR DMM Tiler Ports. The DMM will split address ranges internally to address DDR EMIF and DDR DMM control registers.

(4) DDR EMIF0 and DDR EMIF1 addresses may be contiguous or bank interleaved depending on configuration of the DDR DMM; for more details, see the DDR DMM documentation.

Copyright © 2010–2015, Texas Instruments Incorporated

3.7.2 L4 Memory Map

3.7.2.1 L4 Standard Peripheral

The L4 standard peripheral bus accesses standard peripherals and IP configuration registers. The memory map is shown in Table 3-20.

Table 3-20. L4 Standard Peripheral Memory Map

DEVICE NAME	START ADDRESS (HEX)	END ADDRESS (HEX)	SIZE	DESCRIPTION
L4 Standard Configuration	0x4800 0000	0x4800 07FF	2KB	Address and Protection (AP)
	0x4800 0800	0x4800 0FFF	2KB	Link Agent (LA)
	0x4800 1000	0x4800 13FF	1KB	Initiator Port (IP0)
	0x4800 1400	0x4800 17FF	1KB	Initiator Port (IP1)
	0x4800 1800	0x4800 1FFF	2KB	Reserved (IP2 – IP3)
Reserved	0x4800 2000	0x4800 7FFF	24KB	Reserved
e-Fuse Controller	0x4800 8000	0x4800 8FFF	4KB	Peripheral Registers
	0x4800 9000	0x4800 9FFF	4KB	Support Registers
Reserved	0x4800 A000	0x4800 FFFF	24KB	Reserved
Reserved	0x4801 2000	0x4801 FFFF	56KB	Reserved
UART0	0x4802 0000	0x4802 0FFF	4KB	Peripheral Registers
	0x4802 1000	0x4802 1FFF	4KB	Support Registers
UART1	0x4802 2000	0x4802 2FFF	4KB	Peripheral Registers
	0x4802 3000	0x4802 3FFF	4KB	Support Registers
UART2	0x4802 4000	0x4802 4FFF	4KB	Peripheral Registers
	0x4802 5000	0x4802 5FFF	4KB	Support Registers
Reserved	0x4802 6000	0x4802 7FFF	8KB	Reserved
I2C0	0x4802 8000	0x4802 8FFF	4KB	Peripheral Registers
	0x4802 9000	0x4802 9FFF	4KB	Support Registers
I2C1	0x4802 A000	0x4802 AFFF	4KB	Peripheral Registers
	0x4802 B000	0x4802 BFFF	4KB	Support Registers
Reserved	0x4802 C000	0x4802 DFFF	8KB	Reserved
TIMER1	0x4802 E000	0x4802 EFFF	4KB	Peripheral Registers
	0x4802 F000	0x4802 FFFF	4KB	Support Registers
SPIOCP	0x4803 0000	0x4803 0FFF	4KB	Peripheral Registers
	0x4803 1000	0x4803 1FFF	4KB	Support Registers
GPIO0	0x4803 2000	0x4803 2FFF	4KB	Peripheral Registers
	0x4803 3000	0x4803 3FFF	4KB	Support Registers
Reserved	0x4803 4000	0x4803 7FFF	16KB	Reserved
McASP0 CFG	0x4803 8000	0x4803 9FFF	8KB	Peripheral Registers
	0x4803 A000	0x4803 AFFF	4KB	Support Registers
Reserved	0x4803 B000	0x4803 BFFF	4KB	Reserved
McASP1 CFG	0x4803 C000	0x4803 DFFF	8KB	Peripheral Registers
	0x4803 E000	0x4803 EFFF	4KB	Support Registers
Reserved	0x4803 F000	0x4803 FFFF	4KB	Reserved
TIMER2	0x4804 0000	0x4804 0FFF	4KB	Peripheral Registers
	0x4804 1000	0x4804 1FFF	4KB	Support Registers
TIMER3	0x4804 2000	0x4804 2FFF	4KB	Peripheral Registers
	0x4804 3000	0x4804 3FFF	4KB	Support Registers
TIMER4	0x4804 4000	0x4804 4FFF	4KB	Peripheral Registers
	0x4804 5000	0x4804 5FFF	4KB	Support Registers

Copyright © 2010–2015, Texas Instruments Incorporated

Table 3-20. L4 Standard Peripheral Memory Map (continued)

DEVICE NAME	START ADDRESS (HEX)	END ADDRESS (HEX)	SIZE	DESCRIPTION
TIMER5	0x4804 6000	0x4804 6FFF	4KB	Peripheral Registers
	0x4804 7000	0x4804 7FFF	4KB	Support Registers
TIMER6	0x4804 8000	0x4804 8FFF	4KB	Peripheral Registers
	0x4804 9000	0x4804 9FFF	4KB	Support Registers
TIMER7	0x4804 A000	0x4804 AFFF	4KB	Peripheral Registers
	0x4804 B000	0x4804 BFFF	4KB	Support Registers
GPIO1	0x4804 C000	0x4804 CFFF	4KB	Peripheral Registers
	0x4804 D000	0x4804 DFFF	4KB	Support Registers
Reserved	0x4804 E000	0x4804 FFFF	8KB	Reserved
McASP2 CFG	0x4805 0000	0x4805 1FFF	8KB	Peripheral Registers
	0x4805 2000	0x4805 2FFF	4KB	Support Registers
Reserved	0x4805 3000	0x4805 FFFF	52KB	Reserved
SD and SDIO	0x4806 0000	0x4806 FFFF	64KB	Registers
	0x4807 0000	0x4807 0FFF	4KB	Support Registers
Reserved	0x4807 1000	0x4807 FFFF	60KB	Reserved
ELM	0x4808 0000	0x4808 FFFF	64KB	Error Location Module
	0x4809 0000	0x4809 0FFF	4KB	Support Registers
Reserved	0x4809 1000	0x480B FFFF	188KB	Reserved
RTC	0x480C 0000	0x480C 0FFF	4KB	Peripheral Registers
	0x480C 1000	0x480C 1FFF	4KB	Support Registers
WDT1	0x480C 2000	0x480C 2FFF	4KB	Peripheral Registers
	0x480C 3000	0x480C 3FFF	4KB	Support Registers
Reserved	0x480C 4000	0x480C 7FFF	16KB	Reserved
Mailbox	0x480C 8000	0x480C 8FFF	4KB	Peripheral Registers
	0x480C 9000	0x480C 9FFF	4KB	Support Registers
Spinlock	0x480C A000	0x480C AFFF	4KB	Peripheral Registers
	0x480C B000	0x480C BFFF	4KB	Support Registers
Reserved	0x480C C000	0x480F FFFF	208KB	Reserved
HDVPSS	0x4810 0000	0x4811 FFFF	128KB	Peripheral Registers
	0x4812 0000	0x4812 0FFF	4KB	Support Registers
Reserved	0x4812 1000	0x4812 1FFF	4KB	Reserved
HDMI 1.3 Tx	0x4812 2000	0x4812 2FFF	4KB	Peripheral Registers
	0x4812 3000	0x4812 3FFF	4KB	Support Registers
Reserved	0x4812 4000	0x4813 FFFF	112KB	Reserved
Control Module	0x4814 0000	0x4815 FFFF	128KB	Peripheral Registers
	0x4816 0000	0x4816 0FFF	4KB	Support Registers
Reserved	0x4816 1000	0x4817 FFFF	124KB	Reserved
PRCM	0x4818 0000	0x4818 2FFF	12KB	Peripheral Registers
	0x4818 3000	0x4818 3FFF	4KB	Support Registers
Reserved	0x4818 4000	0x4818 7FFF	16KB	Reserved
SmartReflex0	0x4818 8000	0x4818 8FFF	4KB	Peripheral Registers
	0x4818 9000	0x4818 9FFF	4KB	Support Registers
SmartReflex1	0x4818 A000	0x4818 AFFF	4KB	Peripheral Registers
	0x4818 B000	0x4818 BFFF	4KB	Support Registers
OCP Watchpoint	0x4818 C000	0x4818 CFFF	4KB	Peripheral Registers
	0x4818 D000	0x4818 DFFF	4KB	Support Registers

Copyright © 2010–2015, Texas Instruments Incorporated

Table 3-20. L4 Standard Peripheral Memory Map (continued)

DEVICE NAME	START ADDRESS (HEX)	END ADDRESS (HEX)	SIZE	DESCRIPTION
Reserved	0x4818 E000	0x4818 EFFF	4KB	Reserved
	0x4818 F000	0x4818 FFFF	4KB	Reserved
Reserved	0x4819 0000	0x4819 0FFF	4KB	Reserved
	0x4819 1000	0x4819 1FFF	4KB	Reserved
Reserved	0x4819 2000	0x4819 2FFF	4KB	Reserved
	0x4819 3000	0x4819 3FFF	4KB	Reserved
Reserved	0x4819 4000	0x4819 4FFF	4KB	Reserved
	0x4819 5000	0x4819 5FFF	4KB	Reserved
Reserved	0x4819 6000	0x4819 6FFF	4KB	Reserved
	0x4819 7000	0x4819 7FFF	4KB	Reserved
DDR0 Phy Ctrl Regs	0x4819 8000	0x4819 8FFF	4KB	Peripheral Registers
	0x4819 9000	0x4819 9FFF	4KB	Support Registers
DDR1 Phy Ctrl Regs	0x4819 A000	0x4819 AFFF	4KB	Peripheral Registers
	0x4819 B000	0x4819 BFFF	4KB	Support Registers
Reserved	0x4819 C000	0x481F FFFF	400KB	Reserved
Interrupt controller (1)	0x4820 0000	0x4820 0FFF	4KB	Cortex™-A8 Accessible Only
Reserved (1)	0x4820 1000	0x4823 FFFF	252KB	Cortex™-A8 Accessible Only
MPUSS config register (1)	0x4824 0000	0x4824 0FFF	4KB	Cortex™-A8 Accessible Only
Reserved (1)	0x4824 1000	0x4827 FFFF	252KB	Cortex™-A8 Accessible Only
Reserved (1)	0x4828 1000	0x482F FFFF	508KB	Cortex™-A8 Accessible Only
Reserved	0x4830 0000	0x48FF FFFF	13MB	Reserved

(1) These regions are decoded internally by the Cortex™-A8 Subsystem and are not physically part of the L4 standard. They are included here only for reference when considering the Cortex™-A8 memory map. For masters other than the Cortex™-A8, these regions are reserved.

Copyright © 2010–2015, Texas Instruments Incorporated

3.7.2.2 L4 High-Speed Peripheral

The L4 high-speed peripheral bus accesses the IP configuration registers of high-speed peripherals in L3. The memory map is shown in Table 3-21.

Table 3-21. L4 High-Speed Peripheral Memory Map

DEVICE NAME	START ADDRESS (HEX)	END ADDRESS (HEX)	SIZE	DESCRIPTION
L4 High Speed configuration	0x4A00 0000	0x4A00 07FF	2KB	Address and Protection (AP)
	0x4A00 0800	0x4A00 0FFF	2KB	Link Agent (LA)
	0x4A00 1000	0x4A00 13FF	1KB	Initiator Port (IP0)
	0x4A00 1400	0x4A00 17FF	1KB	Initiator Port (IP1)
	0x4A00 1800	0x4A00 1FFF	2KB	Reserved (IP2 – IP3)
Reserved	0x4A00 2000	0x4A07 FFFF	504KB	Reserved
Reserved	0x4A08 0000	0x4A0A 0FFF	132KB	Reserved
Reserved	0x4A0A 1000	0x4A0F FFFF	380KB	Reserved
EMAC0	0x4A10 0000	0x4A10 3FFF	16KB	Peripheral Registers
	0x4A10 4000	0x4A10 4FFF	4KB	Support Registers
Reserved	0x4A10 5000	0x4A11 FFFF	108KB	Reserved
EMAC1	0x4A12 0000	0x4A12 3FFF	16KB	Peripheral Registers
	0x4A12 4000	0x4A12 4FFF	4KB	Support Registers
Reserved	0x4A12 5000	0x4A13 FFFF	108KB	Reserved
SATA	0x4A14 0000	0x4A14 FFFF	64KB	Peripheral Registers
	0x4A15 0000	0x4A15 0FFF	4KB	Support Registers
Reserved	0x4A15 1000	0x4A17 FFFF	188KB	Reserved
Reserved	0x4A18 0000	0x4A19 FFFF	128KB	Reserved
	0x4A1A 0000	0x4A1A 0FFF	4KB	Reserved
Reserved	0x4A1A 1000	0x4AFF FFFF	14716KB	Reserved

Copyright © 2010–2015, Texas Instruments Incorporated

3.7.3 TILER Extended Addressing Map

The Tiling and Isometric Lightweight Engines for Rotation (TILER) ports are mainly used for optimized 2-D block accesses. The TILER also supports rotation of the image buffer at 0º, 90º, 180º, and 270º, with vertical and horizontal mirroring.

The TILER includes an additional 4-GB addressing range to access the frame buffer in these rotated and mirrored views. This range requires a thirty-third bit of address and is only accessible to peripherals that require access to the multiple views. On the device, this is limited to the HD Video Processing Subsystem (HDVPSS). (Other peripherals, based on ConnID, may access any one single view through the 512-MB TILER window region located in the base 4-GB range.)

The HDVPSS may use the virtual address space of 4GB (0x1:0000:0000 – 0x1:FFFF:FFFF) since various VPDMA clients of the HDVPSS may need to simultaneously access multiple 2-D images with different orientations of the image buffers.

The top 4-GB address space is divided into eight sections of 512MB each. These eight sections correspond to the eight different orientations as shown in Table 3-22.

Table 3-22. TILER Extended Address Memory Map

BLOCK NAME	START ADDRESS (HEX)	END ADDRESS (HEX)	SIZE	DESCRIPTION
Tiler View 0	0x1 0000 0000	0x1 1FFF FFFF	512MB	Natural 0° View
Tiler View 1	0x1 2000 0000	0x1 3FFF FFFF	512MB	0° with Vertical Mirror View
Tiler View 2	0x1 4000 0000	0x1 5FFF FFFF	512MB	0° with Horizontal Mirror View
Tiler View 3	0x1 6000 0000	0x1 7FFF FFFF	512MB	180° View
Tiler View 4	0x1 8000 0000	0x1 9FFF FFFF	512MB	90° with Vertical Mirror View
Tiler View 5	0x1 A000 0000	0x1 BFFF FFFF	512MB	270° View
Tiler View 6	0x1 C000 0000	0x1 DFFF FFFF	512MB	90° View
Tiler View 7	0x1 E000 0000	0x1 FFFF FFFF	512MB	90° with Horizontal Mirror View

Copyright © 2010–2015, Texas Instruments Incorporated

3.7.4 Cortex™-A8 Memory Map

The Cortex™-A8 includes an memory management unit (MMU) to translate virtual addresses to physical addresses which are then decoded within the Host ARM Subsystem. The subsystem includes its own ROM and RAM, as well as configuration registers for its interrupt controller. These addresses are hard-coded within the subsystem. In addition, the upper 2GB of address space is routed to a special port (Master 0) intended for low-latency access to DDR memory. All other physical addresses are routed to the L3 port (Master 1) where they are decoded by the device infrastructure. The Cortex™-A8 memory map is shown in Table 3-23.

Table 3-23. Cortex™-A8 Memory Map

REGION NAME	START ADDRESS (HEX)	END ADDRESS (HEX)	SIZE	DESCRIPTION
Boot Space	0x0000 0000	0x000F FFFF	1MB	Boot Space
L3 Target Space	0x0000 0000	0x1FFF FFFF	512MB	GPMC
	0x2000 0000	0x2FFF FFFF	256MB	PCIe Gen2 Targets
	0x3000 0000	0x3FFF FFFF	256MB	Reserved
ROM internal(1)	0x4000 0000	0x4001 FFFF	128KB	Reserved
	0x4002 0000	0x4002 BFFF	48KB	Public
	0x4002 C000	0x400F FFFF	848KB	Reserved
Reserved(1)	0x4010 0000	0x401F FFFF	1MB	Reserved
Reserved(1)	0x4020 0000	0x402E FFFF	960KB	Reserved
Reserved	0x402F 0000	0x402F FFFF	64KB	Reserved
L3 Target Space	0x4030 0000	0x4033 FFFF	256KB	OCMC SRAM
	0x4034 0000	0x403F FFFF	768KB	Reserved
	0x4040 0000	0x4043 FFFF	256KB	OCMC SRAM
	0x4044 0000	0x404F FFFF	768KB	Reserved
	0x4050 0000	0x407F FFFF	3MB	Reserved
	0x4080 0000	0x4083 FFFF	256KB	Reserved
	0x4084 0000	0x40DF FFFF	5888KB	Reserved
	0x40E0 0000	0x40E0 7FFF	32KB	Reserved
	0x40E0 8000	0x40EF FFFF	992KB	Reserved
	0x40F0 0000	0x40F0 7FFF	32KB	Reserved
	0x40F0 8000	0x40FF FFFF	992KB	Reserved
	0x4100 0000	0x41FF FFFF	16MB	Reserved
	0x4200 0000	0x43FF FFFF	32MB	Reserved
	0x4400 0000	0x44BF FFFF	12MB	L3 configuration registers
	0x44C0 0000	0x45FF FFFF	20MB	Reserved
	0x4600 0000	0x463F FFFF	4MB	McASP0
	0x4640 0000	0x467F FFFF	4MB	McASP1
	0x4680 0000	0x46BF FFFF	4MB	McASP2
	0x46C0 0000	0x46FF FFFF	4MB	HDMI 1.3 Tx
	0x4700 0000	0x473F FFFF	4MB	McBSP
	0x4740 0000	0x477F FFFF	4MB	USB2.0 Registers and CPPI
	0x4780 0000	0x47BF FFFF	4MB	Reserved
	0x47C0 0000	0x47FF FFFF	4MB	Reserved
	0x4800 0000	0x481F FFFF	2MB	Standard Peripheral domain (see Table 3-20)
ARM Subsystem INTC(1)	0x4820 0000	0x4820 0FFF	4KB	Cortex™-A8 Interrupt Controller
Reserved(1)	0x4820 1000	0x4823 FFFF	252KB	Reserved
Reserved(1)	0x4824 1000	0x4827 FFFF	252KB	Reserved

Copyright © 2010–2015, Texas Instruments Incorporated

Table 3-23. Cortex™-A8 Memory Map (continued)

REGION NAME	START ADDRESS (HEX)	END ADDRESS (HEX)	SIZE	DESCRIPTION
L3 Target Space	0x4830 0000	0x48FF FFFF	13MB	Standard Peripheral domain (see Table 3-20)
	0x4900 0000	0x490F FFFF	1MB	EDMA TPCC Registers
	0x4910 0000	0x497F FFFF	7MB	Reserved
	0x4980 0000	0x498F FFFF	1MB	EDMA TPTC0 Registers
	0x4990 0000	0x499F FFFF	1MB	EDMA TPTC1 Registers
	0x49A0 0000	0x49AF FFFF	1MB	EDMA TPTC2 Registers
	0x49B0 0000	0x49BF FFFF	1MB	EDMA TPTC3 Registers
	0x49C0 0000	0x49FF FFFF	4MB	Reserved
	0x4A00 0000	0x4AFF FFFF	16MB	High Speed Peripheral domain (see Table 3-21)
	0x4B00 0000	0x4BFF FFFF	16MB	EMU Subsystem region
	0x4C00 0000	0x4CFF FFFF	16MB	DDR EMIF0(2) Configuration registers
	0x4D00 0000	0x4DFF FFFF	16MB	DDR EMIF1(2) Configuration registers
	0x4E00 0000	0x4FFF FFFF	32MB	DDR DMM(2) Configuration registers
	0x5000 0000	0x50FF FFFF	16MB	GPMC Configuration registers
	0x5100 0000	0x51FF FFFF	16MB	PCIE Configuration registers
	0x5200 0000	0x55FF FFFF	64MB	Reserved
	0x5600 0000	0x56FF FFFF	16MB	SGX530 Slave Port (AM3894 only)
	0x5600 0000	0x56FF FFFF	16MB	Reserved (AM3892 only)
	0x5700 0000	0x57FF FFFF	16MB	Reserved
	0x5800 0000	0x5FFF FFFF	128MB	Reserved
	0x6000 0000	0x7FFF FFFF	512MB	TILER Window
DDR EMIF0 and EMIF1 SDRAM(3)(4)	0x8000 0000	0xBFFF FFFF	1GB	DDR
DDR EMIF0 and EMIF1 SDRAM(3)(4)	0xC000 0000	0xFFFF FFFF	1GB	DDR

(1) These addresses are decoded within the Cortex™-A8 subsystem.

(2) These accesses occur through the DDR DMM TILER ports. The DDR DMM splits address ranges internally to address DDR EMIF and DDR DMM control registers based on DDR DMM tie-offs.

(3) These addresses are routed to the Master 0 port for direct connection to the DDR DMM ELLA port.

(4) DDR EMIF0 and DDR EMIF1 addresses may be contiguous or bank interleaved, depending on configuration of the DDR DMM.

Copyright © 2010–2015, Texas Instruments Incorporated

4 Terminal Configuration and Functions

4.1 Pin Assignments

Extensive use of pin multiplexing is used to accommodate the largest number of peripheral functions in the smallest possible package. Pin multiplexing is controlled using a combination of hardware configuration at device reset and software programmable register settings. For more information on pin muxing, see Section 6.5, *Pin Multiplexing Control*.

4.1.1 Pin Map (Bottom View)

Figure 4-1 through Figure 4-19 show the bottom view of the package pin assignments in 15 sections (A, B, C, D, E, F, G, H, I, J, K, L, M, N, and O).

NOTE

Pin map sections D, E, K, and L show the different pin names for silicon revision 1.x devices and silicon revision 2.x devices.

Copyright © 2010–2015, Texas Instruments Incorporated

K	L	M	N	O				
F	G	H	I	J				
A	B	C	D	E				

	1	2	3	4	5	6	7	8
R	SPI_SCS[0]	SPI_SCLK	VSS	VSS	SD_SDWP/ GPMC_A[15]/ GP1[8]	VSS	VSS	VSS
P	SPI_SCS[3]/ GPMC_A[21]/ GP1[22]	SPI_SCS[1]/ GPMC_A[23]	SPI_SCS[2]/ GPMC_A[22]	VSS	VSS	VSS	VSS	DVDD_3P3
N	UART1_RXD/ GPMC_A[26]/ GPMC_A[20]	UART1_TXD/ GPMC_A[25]/ GPMC_A[19]	UART0_RIN/ GPMC_A[17]/ GPMC_A[22]/ GP1[19]	UART0_DSR/ GPMC_A[19]/ GPMC_A[24]/ GP1[17]	UART0_DCD/ GPMC_A[18]/ GPMC_A[23]/ GP1[18]	UART0_DTR/ GPMC_A[20]/ GPMC_A[12]/ GP1[16]	UART0_CTS GP1[28]	UART0_TXD
M	UART2_RXD	UART1_RTS/ GPMC_A[14]/ GPMC_A[18]/ GP1[25]						
L	DVDD_3P3	UART2_TXD	UART1_CTS/ GPMC_A[13]/ GPMC_A[17]/ GP1[26]		DVDD_3P3			VSS
K	VSS	GPMC_A[22]/ GP1[10]					UART2_CTS/ GPMC_A[16]/ GPMC_A[25]/ GP1[24]	GPMC_A[27]/ GP1[9]
J	GPMC_A[15]/ GP0[22]	GPMC_A[16]/ GP0[21]	GPMC_A[24]/ GP1[15]	GPMC_A[23]/ GP1[14]	GP1[13]	GPMC_A[26]/ GP1[11]	GPMC_A[25]/ GP1[12]	
H	TIM6_OUT/ GPMC_A[24]/ GP0[30]	GPMC_A[12]/ GP0[27]	GPMC_A[21]/ GP0[26]	GP0[25]	GPMC_A[14]/ GP0[23]	GPMC_A[13]/ GP0[24]		
G	TIM7_OUT/ GPMC_A[12]/ GP0[31]	GP0[5]/ MCA[2]_AMUTEIN/ GPMC_A[24]		DDR[0]_D[3]	GP0[6]/ MCA[1]_AMUTEIN/ GPMC_A[23]	VSS	VSS	
F	CLKOUT	DDR[0]_D[1]	DDR[0]_D[6]	DDR[0]_DQS[0]			VSS	DDR[0]_D[20]
E	DVDD_DDR[0]	DDR[0]_D[2]	DDR[0]_DQS[0]				DDR[0]_D[23]	DDR[0]_D[27]
D	VSS	DDR[0]_D[4]				DDR[0]_D[11]	DDR[0]_D[9]	DDR[0]_D[21]
C	DDR[0]_D[7]	DDR[0]_DQM[0]			DDR[0]_D[8]	DDR[0]_D[10]		DDR[0]_D[16]
B	DDR[0]_D[0]	DDR[0]_D[5]	DDR[0]_D[15]	DDR[0]_DQS[1]	DDR[0]_DQM[1]	DDR[0]_D[13]	DDR[0]_D[19]	DDR[0]_DQS[2]
A	VSS	DVDD_DDR[0]	DDR[0]_D[14]	DDR[0]_DQS[1]	DDR[0]_D[12]	DDR[0]_VTP	DDR[0]_D[17]	DDR[0]_DQS[2]

Figure 4-1. Pin Map [Section A]

K	L	M	N	O
F	G	H	I	J
A	B	C	D	E

	9	10	11	12	13	14	15	16
R	DVDD_3P3	DVDD_3P3	DVDD_3P3		SD_SDCD/ GPMC_A[16]/ GP1[7]	CVDDC	CVDDC	CVDD
P	DVDD_3P3	DVDD_3P3	DVDD_3P3		SPI_D[1]	CVDDC	CVDDC	CVDD
N	$\overline{\text{UART0_RTS}}$/ GP1[27]	UART0_RXD	SPI_D[0]		CVDDC	DDR[0]_A[8]	DDR[0]_BA[2]	DDR[0]_A[12]
M			VSS					
L	$\overline{\text{UART2_RTS}}$/ GPMC_A[15]/ GPMC_A[26]/ GP1[23]			VSS	DDR[0]_A[6]	DVDD_DDR[0]	DVDD_DDR[0]	DVDD_DDR[0]
K					DDR[0]_A[9]	DVDD_DDR[0]	DVDD_DDR[0]	DVDD_DDR[0]
J			DDR[0]_D[30]		DDR[0]_A[5]	DVDD_DDR[0]	DVDD_DDR[0]	DVDD_DDR[0]
H		DDR0_D[18]	VSS		DDR0_A[4]	VSS	VSS	VSS
G	DDR[0]_DQM[2]	DDR[0]_D[28]			DDR[0]_A[3]	VSS	VSS	VSS
F	DDR0_D[22]				DDR[0]_BA[0]	VSS	VSS	VSS
E	DDR[0]_D[24]		DVDD_DDR[0]		$\overline{\text{DDR[0]_WE}}$	VSS		
D	DDR[0]_DQM[3]				$\overline{\text{DDR[0]_RAS}}$	RSV20	DDR[0]_A[2]	
C	DDR[0]_D[31]		DDR[0]_D[29]		$\overline{\text{DDR[0]_CAS}}$	DDR[0]_A[10]	VSS	
B	DDR[0]_DQS[3]	DDR[0]_D[26]	DDR[0]_D[25]	DDR[0]_CLK[0]	DDR[0]_A[11]	DDR[0]_BA[1]	$\overline{\text{DDR[0]_CLK[1]}}$	DDR[0]_A[13]
A	$\overline{\text{DDR[0]_DQS[3]}}$	VSS	DVDD_DDR[0]	$\overline{\text{DDR[0]_CLK[0]}}$	DDR[0]_A[0]	DDR[0]_A[7]	DDR[0]_CLK[1]	DDR[0]_ODT[1]

Figure 4-2. Pin Map [Section B]

Copyright © 2010–2015, Texas Instruments Incorporated

K	L	M	N	O
F	G	H	I	J
A	B	C	D	E

	17	18	19	20	21	22	23	24
R	CVDD	CVDD	CVDD	CVDD	CVDD	CVDD	CVDDC	CVDDC
P	CVDD	CVDD	CVDD	CVDD	CVDD	CVDD	CVDDC	CVDDC
N	DDR[0]_A[1]	VSS	RSV3	RSV4	DDR[1]_A[1]	DDR[1]_A[12]	DDR[1]_BA[2]	DDR[1]_A[8]
M								
L	DVDD_DDR[0]	DVDD_DDR[0]	DVDD_DDR[0]	DVDD_DDR[1]	DVDD_DDR[1]	DVDD_DDR[1]	DVDD_DDR[1]	DVDD_DDR[1]
K	DVDD_DDR[0]	DVDD_DDR[0]	DVDD_DDR[0]	DVDD_DDR[1]	DVDD_DDR[1]	DVDD_DDR[1]	DVDD_DDR[1]	DVDD_DDR[1]
J	DVDD_DDR[0]	DVDD_DDR[0]	DVDD_DDR[1]	DVDD_DDR[1]	DVDD_DDR[1]	DVDD_DDR[1]	DVDD_DDR[1]	DVDD_DDR[1]
H	VSS	VSS	VSS	VSS	VSS	VSS	VSS	VSS
G	VSS	VSS		VSS	VSS	VSS	VSS	VSS
F	VSS	$\overline{\text{DDR[0]_CS[1]}}$		$\overline{\text{DDR[1]_CS[1]}}$	VSS	VSS	VSS	VSS
E		DDR[0]_ODT[0]	DEVOSC_DVDD18	DDR[1]_ODT[0]				VSS
D	DDR[0]_A[14]	$\overline{\text{DDR[0]_RST}}$		$\overline{\text{DDR[1]_RST}}$	DDR[1]_A[14]		DDR[1]_A[2]	RSV8
C	VSS	DDR[0]_CKE	DEV_MXO	DDR[1]_CKE	VSS		VSS	DDR[1]_A[10]
B	$\overline{\text{DDR[0]_CS[0]}}$	VDDA_PLL	DEVOSC_VSS	VSSA_PLL	$\overline{\text{DDR[1]_CS[0]}}$	DDR[1]_A[13]	$\overline{\text{DDR[1]_CLK[1]}}$	DDR[1]_BA[1]
A	VREFSSTL_DDR[0]	VDDA_PLL	DEV_MXI/ DEV_CLKIN	VSSA_PLL	VREFSSTL_DDR[1]	DDR[1]_ODT[1]	DDR[1]_CLK[1]	DDR[1]_A[7]

Figure 4-3. Pin Map [Section C]

K	L	M	N	O				
F	G	H	I	J				
A	B	C	D	E				

R	VDD_USB0_1P8		DVDD_3P3	DVDD_3P3	VDD_USB0_3P3	VDD_USB1_3P3	VSS	VSS
P	RSV2		DVDD_3P3	DVDD_3P3	DVDD_3P3	DVDD_3P3	VSS	RSV19
N	CVDDC		VDD_USB_0P9	RSV10	RSV11	TDO	TMS	I2C[0]_SCL
M			VSS					
L	DDR[1]_A[6]	VSS			GP0[1]	DVDD_3P3		
K	DDR[1]_A[9]					GP0[2]	GP0[0]	
J	DDR[1]_A[5]		DDR[1]_D[30]				GP0[3]/ TCLKIN	GP1[30]/ SATA_ACT0_LED
H	DDR[1]_A[4]		VSS	DDR[1]_D[18]				GP0[4]
G	DDR[1]_A[3]			DDR[1]_D[28]	DDR[1]_DQM[2]		VSS	VSS
F	DDR[1]_BA[0]				DDR[1]_D[22]	DDR[1]_D[20]	VSS	
E	$\overline{\text{DDR[1]_WE}}$		DVDD_DDR[1]		DDR[1]_D[24]	DDR[1]_D[27]	DDR[1]_D[23]	
D	$\overline{\text{DDR[1]_RAS}}$				DDR[1]_DQM[3]	DDR[1]_D[21]	DDR[1]_D[9]	DDR[1]_D[11]
C	$\overline{\text{DDR[1]_CAS}}$		DDR[1]_D[29]		DDR[1]_D[31]	DDR[1]_D[16]		DDR[1]_D[10]
B	DDR[1]_A[11]	DDR[1]_CLK[0]	DDR[1]_D[25]	DDR[1]_D[26]	DDR[1]_DQS[3]	DDR[1]_DQS[2]	DDR[1]_D[19]	DDR[1]_D[13]
A	DDR[1]_A[0]	$\overline{\text{DDR[1]_CLK[0]}}$	DVDD_DDR[1]	VSS	$\overline{\text{DDR[1]_DQS[3]}}$	$\overline{\text{DDR[1]_DQS[2]}}$	DDR[1]_D[17]	DDR[1]_VTP
	25	26	27	28	29	30	31	32

Figure 4-4. Pin Map [Section D] - Silicon Revision 1.x

Copyright © 2010–2015, Texas Instruments Incorporated

K	L	M	N	O				
F	G	H	I	J				
A	B	C	D	E				

	25	26	27	28	29	30	31	32
R	VDD_USB0_1P8		DVDD_3P3	DVDD_3P3	VDD_USB0_3P3	VDD_USB1_3P3	VSS	VSS
P	RSV2		DVDD_3P3	DVDD_3P3	DVDD_3P3	DVDD_3P3	VSS	RSV19
N	CVDDC		VDD_USB_0P9	RSV10	RSV11	TDO	TMS	I2C[0]_SCL
M			VSS					
L	DDR[1]_A[6]	VSS			GP0[1]	DVDD_3P3		
K	DDR[1]_A[9]					GP0[2]	GP0[0]	
J	DDR[1]_A[5]		DDR[1]_D[30]				GP0[3]/ TCLKIN	GP1[30]/ SATA_ACT1_LED
H	DDR[1]_A[4]		VSS	DDR[1]_D[18]				GP0[4]
G	DDR[1]_A[3]			DDR[1]_D[28]	DDR[1]_DQM[2]		VSS	VSS
F	DDR[1]_BA[0]				DDR[1]_D[22]	DDR[1]_D[20]	VSS	
E	$\overline{\text{DDR[1]_WE}}$		DVDD_DDR[1]		DDR[1]_D[24]	DDR[1]_D[27]	DDR[1]_D[23]	
D	$\overline{\text{DDR[1]_RAS}}$				DDR[1]_DQM[3]	DDR[1]_D[21]	DDR[1]_D[9]	DDR[1]_D[11]
C	$\overline{\text{DDR[1]_CAS}}$		DDR[1]_D[29]		DDR[1]_D[31]	DDR[1]_D[16]		DDR[1]_D[10]
B	DDR[1]_A[11]	DDR[1]_CLK[0]	DDR[1]_D[25]	DDR[1]_D[26]	DDR[1]_DQS[3]	DDR[1]_DQS[2]	DDR[1]_D[19]	DDR[1]_D[13]
A	DDR[1]_A[0]	$\overline{\text{DDR[1]_CLK[0]}}$	DVDD_DDR[1]	VSS	$\overline{\text{DDR[1]_DQS[3]}}$	$\overline{\text{DDR[1]_DQS[2]}}$	DDR[1]_D[17]	DDR[1]_VTP

Figure 4-5. Pin Map [Section D] - Silicon Revision 2.x

	K	L	M	N	O
	F	G	H	I	J
	A	B	C	D	E

	33	34	35	36	37
R	VSS	RSV16	USB1_DRVVBUS	USB1_DN	USB1_DP
P	RSV18	RSV17	USB0_DRVVBUS	USB0_DN	USB0_DP
N	I2C[0]_SDA	I2C[1]_SCL	I2C[1]_SDA	VDD_USB0_VBUS	USB0_R1
M				EMU3	EMU4
L	VSS		DVDD_3P3	EMU1	EMU2
K				$\overline{\text{TRST}}$	VSS
J	GP1[31]/ SATA_ACT1_LED	TDI	EMU0	RTCK	TCLK
H	TIM4_OUT/ GP0[28]	TIM5_OUT/ GP0[29]	GP0[7]/ MCA[0]_AMUTEIN	WD_OUT	CLKIN32
G	$\overline{\text{RESET}}$	DDR[1]_D[3]		$\overline{\text{NMI}}$	$\overline{\text{RSTOUT}}$
F		DDR[1]_DQS[0]	DDR[1]_D[6]	DDR[1]_D[1]	$\overline{\text{POR}}$
E			$\overline{\text{DDR[1]_DQS[0]}}$	DDR[1]_D[2]	VSS
D				DDR[1]_D[4]	DVDD_DDR[1]
C	DDR[1]_D[8]			DDR[1]_DQM[0]	DDR[1]_D[7]
B	DDR[1]_DQM[1]	DDR[1]_DQS[1]	DDR[1]_D[15]	DDR[1]_D[5]	DDR[1]_D[0]
A	DDR[1]_D[12]	$\overline{\text{DDR[1]_DQS[1]}}$	DDR[1]_D[14]	DVDD_DDR[1]	VSS

Figure 4-6. Pin Map [Section E] - Silicon Revision 1.x

Copyright © 2010–2015, Texas Instruments Incorporated

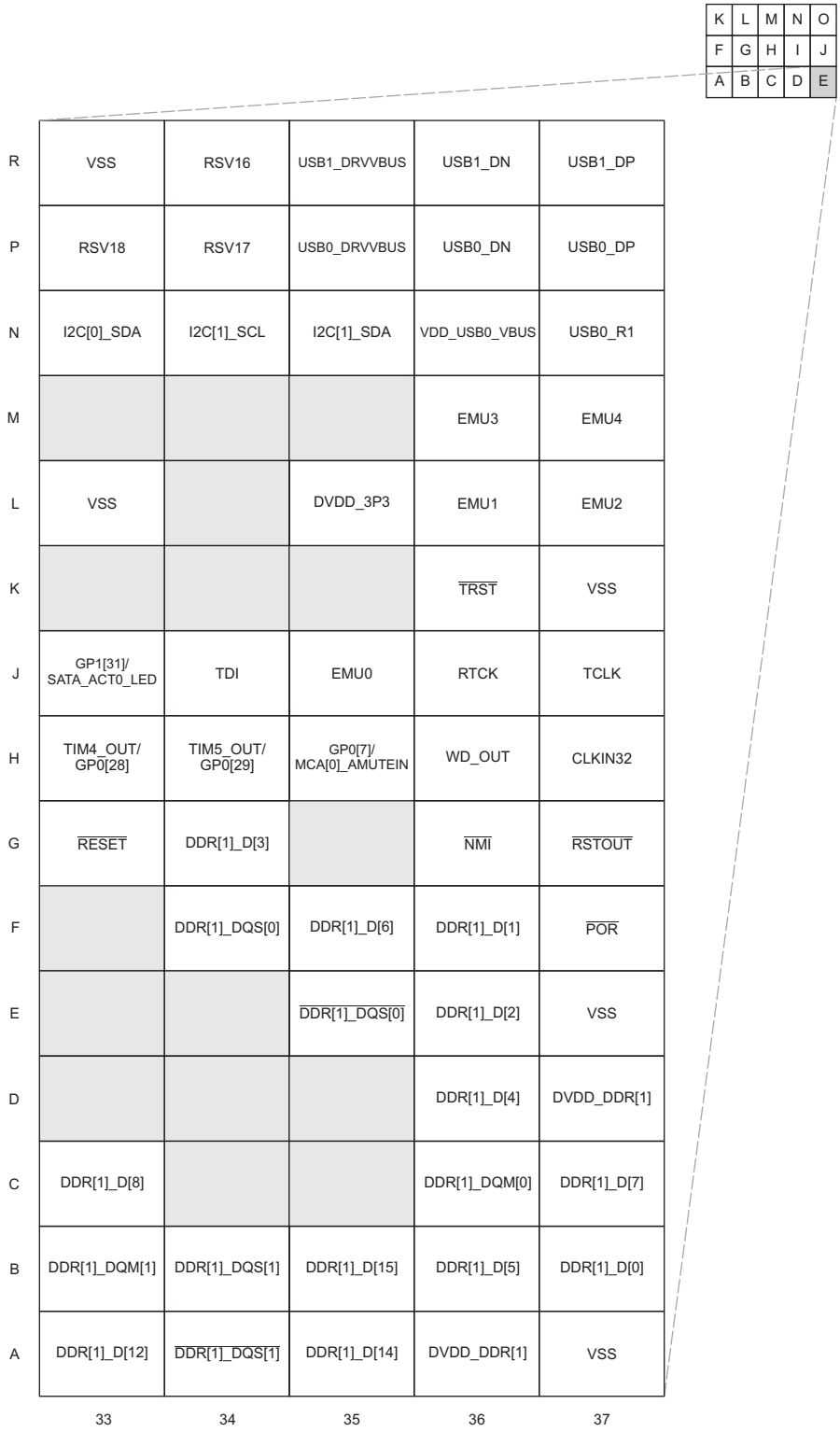

Figure 4-7. Pin Map [Section E] - Silicon Revision 2.x

K	L	M	N	O
F	G	H	I	J
A	B	C	D	E

	1	2	3	4	5	6	7	8
AK	RSV31	RSV43	RSV46	VIN[0]A_D[19]/ VIN[1]A_DE/ VOUT[1]_C[9]	VIN[0]A_D[18]/ VIN[1]A_FLD/ VOUT[1]_C[8]	VOUT[1]_C[2]/ VIN[1]A_D[8]		
AJ	RSV42	RSV45	RSV47	RSV48	RSV49	RSV50	VOUT[1]_Y_YC[5]/ VIN[1]A_D[3]	
AH	$\overline{\text{GPMC_CS[1]}}$	$\overline{\text{GPMC_CS[2]}}$					$\overline{\text{GPMC_CS[0]}}$	RSV44
AG	$\overline{\text{GPMC_CS[5]}}$/ GPMC_A[12]	$\overline{\text{GPMC_WE}}$	$\overline{\text{GPMC_CS[4]}}$/ GP1[21]		VSS			VSS
AF	$\overline{\text{GPMC_BE1}}$	$\overline{\text{GPMC_OE_RE}}$						
AE	GPMC_A[4]/ GP0[12]/ BTMODE[3]	GPMC_A[5]/ GP0[13]/ BTMODE[4]	GPMC_A[3]/ GP0[11]/ BTMODE[2]	GPMC_A[2]/ GP0[10]/ BTMODE[1]	GPMC_A[1]/ GP0[9]/ BTMODE[0]	GPMC_A[0]/ GP0[8]	GPMC_DIR/ GP1[20]	GPMC_WAIT
AD	GPMC_A[10]/ GP0[18]	GPMC_A[9]/ GP0[17]/ CS0WAIT	GPMC_A[7]/ GP0[15]/ CS0MUX[1]	GPMC_A[8]/ GP0[16]/ CS0BW	VSS	VSS	VSS	GPMC_A[6]/ GP0[14]/ CS0MUX[0]
AC	GPMC_D[0]	GPMC_A[11]/ GP0[19]	VSS	VSS	GPMC_A[27]/ GP0[20]	VSS	VSS	VSS
AB	VSS	GPMC_D[2]				VSS	VSS	VSS
AA	DVDD_3P3	GPMC_D[5]	GPMC_D[3]	GPMC_D[1]	VSS	VSS	VSS	VSS
Y	GPMC_D[9]	GPMC_D[7]	GPMC_D[4]	VSS	VSS	VSS	VSS	VSS
W	GPMC_D[11]	GPMC_D[12]	GPMC_D[10]	GPMC_D[8]		VSS	VSS	VSS
V	GPMC_CLK/ GP1[29]	GPMC_D[15]	GPMC_D[14]	VSS	VSS	VSS	VSS	VSS
U	SD_DAT[0]/ GPMC_A[20]/ GP1[3]	SD_CLK/ GPMC_A[13]/ GP1[1]	SD_CMD/ GPMC_A[21]/ GP1_[2]	SD_POW/ GPMC_A[14]/ GP1[0]	VSS	VSS	VSS	VSS
T	SD_DAT[1]_SDIRQ/ GPMC_A[19]/ GP1[4]	SD_DAT[2]_SDRW/ GPMC_A[18]/ GP1[5]				VSS	VSS	VSS

Figure 4-8. Pin Map [Section F]

Copyright © 2010–2015, Texas Instruments Incorporated

K	L	M	N	O
F	G	H	I	J
A	B	C	D	E

	9	10	11	12	13	14	15	16
AK		VOUT[0]_R_CR[8]/ VOUT[0]_B_CB_C[0]/ VOUT[1]_Y_YC[8]	VSS		VOUT[0]_B_CB_C[5]		VSS	VSS
AJ			VOUT[0]_R_CR[0]/ VOUT[1]_C[8]/ VOUT[1]_CLK		VOUT[0]_B_CB_C[6]	DVDD_3P3	DVDD_3P3	DVDD_3P3
AH					VOUT[0]_B_CB_C[8]	DVDD_3P3	DVDD_3P3	DVDD_3P3
AG	$\overline{\text{GPMC_CS[3]}}$			VSS	VOUT[0]_R_CR[4]/ VOUT[0]_FLD/ VOUT[1]_Y_YC[4]	DVDD_3P3	DVDD_3P3	DVDD_3P3
AF			VSS					
AE	$\overline{\text{GPMC_WP}}$	GPMC_$\overline{\text{ADV}}$_ALE	GPMC_$\overline{\text{BE0}}$_CLE		CVDDC	VOUT[0]_G_Y_YC[6]	VOUT[0]_G_Y_YC[2]	VIN[0]A_D[9]
AD	DVDD_3P3	DVDD_3P3	DVDD_3P3		VOUT[1]_C[7]/ VIN[1]A_D[13]	CVDDC	CVDDC	CVDD
AC	DVDD_3P3	DVDD_3P3	DVDD_3P3		VOUT[1]_Y_YC[6]/ VIN[1]A_D[4]	CVDDC	CVDDC	CVDD
AB	DVDD_3P3	DVDD_3P3	DVDD_3P3		RSV51	CVDD	CVDD	CVDD
AA	DVDD_3P3	DVDD_3P3	DVDD_3P3		VSS	VSS	VSS	VSS
Y	DVDD_3P3	GPMC_D[6]			VSS	VSS	VSS	VSS
W	VSS				VSS	VSS	VSS	VSS
V	VSS	GPMC_D[13]			VSS	VSS	VSS	VSS
U	DVDD_3P3	DVDD_3P3	DVDD_3P3		VSS	VSS	VSS	VSS
T	DVDD_3P3	DVDD_3P3	DVDD_3P3		SD_DAT[3]/ GPMC_A[17]/ GP1[6]	CVDD	CVDD	CVDD

Figure 4-9. Pin Map [Section G]

	K	L	M	N	O			
	F	G	H	I	J			
	A	B	C	D	E			
AK	VSS	VSS	VSS	VSSA_HD	VSSA_HD	RSV57	VSS	VSS
AJ	DVDD_3P3	VSS	VIN[0]A_D[0]	DVDD1P8	VDDA_SD_1P8	VDDA_HD_1P8	RSV56	DVDD1P8
AH	DVDD_3P3	VIN[0]A_D[2]	VDAC_VREF	VDDA_SD_1P8	VDDA_SD_1P8	VDDA_HD_1P8	RSV55	RSV15
AG	DVDD_3P3			VDDA_SD_1P0	VDDA_HD_1P0	RSV53	RSV54	RSV13
AF								
AE	VSS	VSS	VSS	VSS	RSV52	VDAC_RBIAS_HD	RSV7	HDMI_HPDET
AD	CVDD	CVDD	CVDD	CVDD	CVDD	CVDD	CVDDC	CVDDC
AC	CVDD	CVDD	CVDD	CVDD	CVDD	CVDD	CVDDC	CVDDC
AB	CVDD	CVDD	CVDD	CVDD	CVDD	CVDD	CVDD	CVDD
AA	VSS	VSS	VSS	VSS	VSS	VSS	VSS	VSS
Y	VSS	VSS	VSS	VSS	VSS	VSS	VSS	VSS
W	VSS	VSS	VSS	VSS	VSS	VSS	VSS	VSS
V	VSS	VSS	VSS	VSS	VSS	VSS	VSS	VSS
U	VSS	VSS	VSSA_PLL	VSS	VSS	VSS	VSS	VSS
T	CVDD	CVDD	CVDD	CVDD	CVDD	CVDD	CVDD	CVDD
	17	18	19	20	21	22	23	24

Figure 4-10. Pin Map [Section H]

Copyright © 2010–2015, Texas Instruments Incorporated

AK	HDMI_SDA		VSS	MCA[0]_ACLKR				MCA[1]_AXR[1]
AJ	VSS		MCA[0]_AHCLKR				MCA[0]_AFSX	MCA[0]_AXR[1]
AH	RSV14					MCA[0]_ACLKX	MCA[0]_AHCLKX	
AG	RSV12	VSS		EMAC[0]_TXD[4]	MCA[0]_AFSR	VSS		
AF			VSS					
AE	CVDDC		DVDD_3P3	DVDD_3P3	DVDD_3P3	EMAC[0]_TXD[3]	EMAC[0]_TXD[2]	EMAC[0]_TXD[1]
AD	EMAC[0]_RXD[5]		DVDD_3P3	DVDD_3P3	DVDD_3P3	VSS	VSS	VSS
AC	EMAC[0]_RXD[6]		DVDD_3P3	DVDD_3P3	DVDD_3P3	VSS	VSS	VSS
AB	EMAC[0]_COL		VDDT_PCIE	PCIE_TXN1	VDDT_PCIE	PCIE_TXN0	PCIE_TXP0	VDDT_PCIE
AA	EMAC[0]_CRS							
Y	VDDR_PCIE		PCIE_TXP1	VDDT_PCIE	PCIE_RXP0	VDDT_PCIE	VSS	VSS
W	VDDR_PCIE							
V	VDDR_SATA		VSS	VSS	PCIE_RXN0	PCIE_RXN1	PCIE_RXP1	VDDT_SATA
U	VDDR_SATA							
T	VDD_USB1_1P8		RSV6	RSV5	VDD_USB0_3P3	VDD_USB1_3P3	SATA_TXN0	SATA_TXP0
	25	26	27	28	29	30	31	32

K	L	M	N	O
F	G	H	I	J
A	B	C	D	E

Figure 4-11. Pin Map [Section I]

K	L	M	N	O	
F	G	H	I	J	
A	B	C	D	E	

	33	34	35	36	37
AK	MCA[1]_AMUTE	MCA[1]_AFSX	MCA[1]_AFSR	MCA[1]_ACLKR	MCA[0]_AXR[0]
AJ	MCA[0]_AXR[2]/ MCB_FSX	MCA[0]_AXR[3]/ MCB_FSR	MCA[0]_AMUTE	MCA[0]_AXR[4]/ MCB_DX	MCA[0]_AXR[5]/ MCB_DR
AH				MDIO_MDIO	MDIO_MCLK
AG	DVDD_3P3		EMAC[0]_TXD[7]	EMAC[0]_TXD[6]	EMAC[0]_TXEN
AF				EMAC[0]_TXD[5]	EMAC[0]_TXCLK
AE	EMAC[0]_TXD[0]	EMAC[0]_RXER	EMAC[0]_RXDV	EMAC[0]_RXD[7]	EMAC[0]_RXCLK
AD	VSS	VSS	EMAC[0]_RXD[3]	EMAC[0]_RXD[1]	EMAC[0]_RXD[0]
AC	VSS	VSS	EMAC[0]_RXD[4]	EMAC[0]_RXD[2]	EMAC[0]_GMTCLK
AB	SERDES_CLKN	SERDES_CLKP	VSS	RSV1	VSS
AA					
Y	VDDT_SATA	VDDT_SATA		VSS	VSS
W			SATA_RXP1		
V	SATA_TXP1	VDDT_SATA	SATA_RXN1	SATA_RXP0	SATA_RXN0
U	SATA_TXN1				
T	VSS	VSS	VSS	VDD_USB1_VBUS	USB1_R1

Figure 4-12. Pin Map [Section J]

Copyright © 2010–2015, Texas Instruments Incorporated

	K	L	M	N	O			
	F	G	H	I	J			
	A	B	C	D	E			
AU	VSS	DVDD_3P3	RSV24	VIN[0]A_D[21]/ VIN[0]B_FLD	VIN[0]A_HSYNC	VOUT[1]_Y_YC[4]/ VIN[1]A_D[2]	VOUT[1]_Y_YC[2]/ VIN[1]A_D[0]	VOUT[0]_G_Y_YC[1]/ VOUT[1]_FLD/ VIN[1]B_FLD
AT	RSV26	VIN[0]A_D[23]/ VIN[0]B_HSYNC	VIN[0]A_DE	VOUT[1]_AVID/ VIN[1]B_CLK	VIN[0]A_D[16]/ VIN[1]A_HSYNC/ VOUT[1]_FLD	VOUT[1]_Y_YC[8]/ VIN[1]A_D[6]	VOUT[1]_CLK/ VIN[1]A_CLK	VOUT[0]_R_CR[1]
AR	RSV27	VIN[0]A_D[22]/ VIN[0]B_VSYNC			VOUT[1]_HSYNC/ VIN[1]A_D[15]	VOUT[1]_Y_YC[7]/ VIN[1]A_D[5]		VOUT[0]_AVID
AP	RSV28	RSV23				VOUT[1]_Y_YC[9]/ VIN[1]A_D[7]	VOUT[1]_Y_YC[3]/ VIN[1]A_D[1]	VOUT[1]_C[5]/ VIN[1]A_D[11]
AN	DVDD_3P3	RSV25	VIN[0]A_D[20]/ VIN[0]B_DE				VOUT[1]_C[4]/ VIN[1]A_D[10]	VOUT[1]_C[6]/ VIN[1]A_D[12]
AM	VSS	RSV29	VIN[1]A_D[14]	VIN[0]A_VSYNC			VSS	VOUT[1]_C[3]/ VIN[1]A_D[9]
AL	RSV32	RSV30		VIN[0]A_FLD	VIN[0]A_D[17]/ VIN[1]A_VSYNC/ VOUT[1]_VSYNC	VSS	VSS	
	1	2	3	4	5	6	7	8

Figure 4-13. Pin Map [Section K] - Silicon Revision 1.x

	K	L	M	N	O			
	F	G	H	I	J			
	A	B	C	D	E			
AU	VSS	DVDD_3P3	RSV24	VIN[0]A_D[21]/ VIN[0]B_FLD	VIN[0]A_HSYNC	VOUT[1]_Y_YC[4]/ VIN[1]A_D[2]	VOUT[1]_Y_YC[2]/ VIN[1]A_D[0]	VOUT[0]_G_Y_YC[1]/ VOUT[1]_FLD/ VIN[1]B_FLD
AT	RSV26	VIN[0]A_D[23]/ VIN[0]B_HSYNC	VIN[0]A_DE	VOUT[1]_AVID/ VIN[1]B_CLK	VIN[0]A_D[16]/ VIN[1]A_HSYNC/ VOUT[1]_FLD	VOUT[1]_Y_YC[8]/ VIN[1]A_D[6]	VOUT[1]_CLK/ VIN[1]A_CLK	VOUT[0]_R_CR[1]
AR	RSV27	VIN[0]A_D[22]/ VIN[0]B_VSYNC			DAC_VOUT[1]_ HSYNC/ VIN[1]A_D[15]	VOUT[1]_Y_YC[7]/ VIN[1]A_D[5]		DAC_HSYNC_ VOUT[0]_AVID
AP	RSV28	RSV23				VOUT[1]_Y_YC[9]/ VIN[1]A_D[7]	VOUT[1]_Y_YC[3]/ VIN[1]A_D[1]	VOUT[1]_C[5]/ VIN[1]A_D[11]
AN	DVDD_3P3	RSV25	VIN[0]A_D[20]/ VIN[0]B_DE				VOUT[1]_C[4]/ VIN[1]A_D[10]	VOUT[1]_C[6]/ VIN[1]A_D[12]
AM	VSS	RSV29	VIN[1]A_D[14]	VIN[0]A_VSYNC			VSS	VOUT[1]_C[3]/ VIN[1]A_D[9]
AL	RSV32	RSV30		VIN[0]A_FLD	VIN[0]A_D[17]/ VIN[1]A_VSYNC/ DAC_VOUT[1]_ VSYNC	VSS	VSS	
	1	2	3	4	5	6	7	8

Figure 4-14. Pin Map [Section K] - Silicon Revision 2.x

Copyright © 2010–2015, Texas Instruments Incorporated

K	L	M	N	O
F	G	H	I	J
A	B	C	D	E

	9	10	11	12	13	14	15	16
AU	VOUT[0]_R_CR[9]/ VOUT[0]_B_CB_C[1]/ VOUT[1]_Y_YC[9]	VOUT[0]_R_CR[6]/ VOUT[0]_G_Y_YC[0]/ VOUT[1]_Y_YC[6]	DVDD_3P3	VSS	VOUT[0]_G_Y_YC[8]	VIN[0]A_D[15]	VIN[0]A_D[14]	VIN[0]A_D[12]
AT	VOUT[0]_B_CB_C[1]/ VOUT[1]_HSYNC/ VOUT[1]_AVID	VOUT[0]_R_CR[5]/ VOUT[0]_AVID/ VOUT[1]_Y_YC[5]	VOUT[0]_R_CR[2]/ VOUT[0]_HSYNC/ VOUT[1]_Y_YC[2]	VOUT[0]_B_CB_C[9]	VOUT[0]_G_Y_YC[7]	VOUT[0]_CLK	VIN[0]A_D[13]	VIN[0]A_D[10]
AR	VOUT[0]_B_CB_C[0]/ VOUT[1]_C[9]/ VIN[1]B_HSYNC_DE		VOUT[0]_R_CR[3]/ VOUT[0]_VSYNC/ VOUT[1]_Y_YC[3]		VOUT[0]_G_Y_YC[9]	VIN[0]A_CLK	VSS	
AP	VOUT[0]_G_Y_YC[0]/ VOUT[1]_VSYNC/ VIN[1]B_VSYNC				VOUT[0]_B_CB_C[2]	VOUT[0]_G_Y_YC[3]	VSS	
AN	VOUT[0]_VSYNC		DVDD_3P3		VOUT[0]_B_CB_C[4]	VSS	VSS	
AM	VOUT[0]_HSYNC				VOUT[0]_B_CB_C[7]	VOUT[0]_G_Y_YC[5]	VSS	VSS
AL	VOUT[0]_FLD	VOUT[0]_R_CR[7]/ VOUT[0]_G_Y_YC[1]/ VOUT[1]_Y_YC[7]			VOUT[0]_B_CB_C[3]	VOUT[0]_G_Y_YC[4]	VSS	VSS

Figure 4-15. Pin Map [Section L] - Silicon Revision 1.x

K	L	M	N	O
F	G	H	I	J
A	B	C	D	E

	9	10	11	12	13	14	15	16
AU	VOUT[0]_R_CR[9]/ VOUT[0]_B_CB_C[1]/ VOUT[1]_Y_YC[9]	VOUT[0]_R_CR[6]/ VOUT[0]_G_Y_YC[0]/ VOUT[1]_Y_YC[6]	DVDD_3P3	VSS	VOUT[0]_G_Y_YC[8]	VIN[0]A_D[15]	VIN[0]A_D[14]	VIN[0]A_D[12]
AT	VOUT[0]_B_CB_C[1]/ DAC_VOUT[1]_ HSYNC/ VOUT[1]_AVID	VOUT[0]_R_CR[5]/ VOUT[0]_AVID/ VOUT[1]_Y_YC[5]	VOUT[0]_R_CR[2]/ VOUT[0]_HSYNC/ VOUT[1]_Y_YC[2]	VOUT[0]_B_CB_C[9]	VOUT[0]_G_Y_YC[7]	VOUT[0]_CLK	VIN[0]A_D[13]	VIN[0]A_D[10]
AR	VOUT[0]_B_CB_C[0]/ VOUT[1]_C[9]/ VIN[1]B_HSYNC_DE		VOUT[0]_R_CR[3]/ VOUT[0]_VSYNC/ VOUT[1]_Y_YC[3]		VOUT[0]_G_Y_YC[9]	VIN[0]A_CLK	VSS	
AP	VOUT[0]_G_Y_YC[0]/ DAC_VOUT[1]_ VSYNC/ VIN[1]B_VSYNC				VOUT[0]_B_CB_C[2]	VOUT[0]_G_Y_YC[3]	VSS	
AN	VOUT[0]_VSYNC		DVDD_3P3		VOUT[0]_B_CB_C[4]	VSS	VSS	
AM	VOUT[0]_HSYNC				VOUT[0]_B_CB_C[7]	VOUT[0]_G_Y_YC[5]	VSS	VSS
AL	DAC_VSYNC_ VOUT[0]_FLD	VOUT[0]_R_CR[7]/ VOUT[0]_G_Y_YC[1]/ VOUT[1]_Y_YC[7]			VOUT[0]_B_CB_C[3]	VOUT[0]_G_Y_YC[4]	VSS	VSS

Figure 4-16. Pin Map [Section L] - Silicon Revision 2.x

Copyright © 2010–2015, Texas Instruments Incorporated

	K	L	M	N	O			
	F	G	H	I	J			
	A	B	C	D	E			
AU	VIN[0]A_D[11]	VIN[0]A_D[1]	VSSA_SD	IOUTG	RSV41	VSSA_REF_1P8	VSS	HDMI_TMDSCLKN
AT	VIN[0]A_D[5]	VIN[0]A_D[4]	IOUTE	IOUTF	IOUTA	VDDA_REF_1P8	VSS	HDMI_TMDSCLKP
AR	VIN[0]A_D[7]	VIN[0]A_D[3]	VIN[0]B_CLK	IOUTD	IOUTB		VSS	VSS
AP	VIN[0]A_D[8]	VIN[0]A_D[6]	VDAC_RBIAS_SD		IOUTC		VDDA_HDMI	VDDA_HDMI
AN		RSV21	RSV22	VSSA_SD	RSV61		VDDA_HDMI	VDDA_HDMI
AM	VSS	VSS	VSS	VSSA_SD	RSV60	RSV59	VSS	VSS
AL	VSS	VSS	VSS	VSSA_SD	VSSA_HD	RSV58	VSS	VSS
	17	18	19	20	21	22	23	24

Figure 4-17. Pin Map [Section M]

K	L	M	N
F	G	H	I
A	B	C	D

	25	26	27	28	29	30	31	32
AU	HDMI_TMDSDN0	HDMI_TMDSDN1	HDMI_TMDSDN2	VSS	DVDD_3P3	EMAC[1]_TXEN	EMAC[1]_TXD[4]	EMAC[1]_TXD[3]
AT	HDMI_TMDSDP0	HDMI_TMDSDP1	HDMI_TMDSDP2	RSV40	RSV39	EMAC[1]_TXCLK	EMAC[1]_TXD[5]	EMAC[1]_TXD[2]
AR	VSS		VDDA_HDMI		RSV38	EMAC[1]_COL		EMAC[1]_TXD[1]
AP	HDMI_CEC				RSV37	EMAC[1]_TXD[6]	EMAC[1]_TXD[0]	EMAC1_RXD[7]
AN	HDMI_EXTSWING		DVDD_3P3		RSV36	EMAC[1]_RXER	EMAC[1]_CRS	
AM	VSS				RSV33	EMAC[1]_TXD[7]	VSS	
AL	HDMI_SCL			RSV34	RSV35		VSS	VSS

Figure 4-18. Pin Map [Section N]

Copyright © 2010–2015, Texas Instruments Incorporated

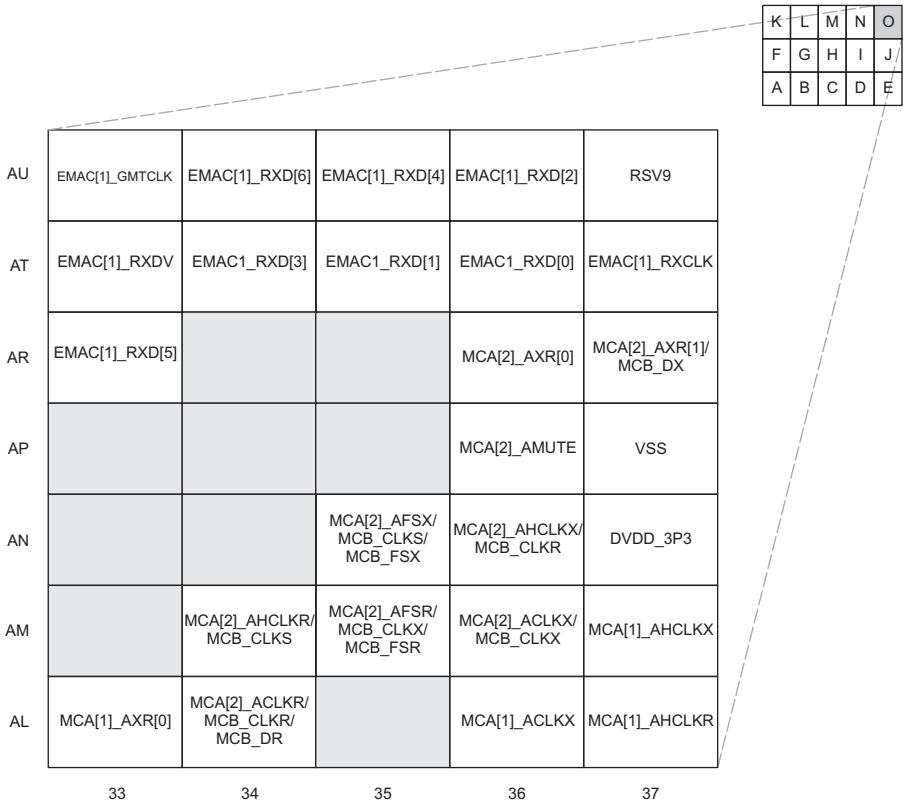

Figure 4-19. Pin Map [Section O]

4.2 Terminal Functions

The terminal functions tables identify the external signal names, the associated pin (ball) numbers along with the mechanical package designator, the pin type, whether the pin has any internal pullup or pulldown resistors, and a functional pin description. Bolded pin names denote the muxed pin function being described in each table. For more detailed information on device configurations, peripheral selection, multiplexed pin, and shared pin see Section 6, *Device Configurations*.

4.2.1 Boot Configuration

Table 4-1. Boot Terminal Functions

SIGNAL NAME	SIGNAL NO.	TYPE(1)	OTHER(2) (3)	MUXED	DESCRIPTION
BOOT					
Boot Mode inputs. Select the peripheral over which the Host ARM Cortex™-A8 will boot.					
GPMC_A[5]/GP0[13]/ **BTMODE[4]**	AE2	I	PULL: IPU / DIS DRIVE: Z / Z DVDD_3P3	GPMC, GP0 PINCTRL226	Boot Mode Selection pins. For boot mode information, see Table 6-6.
GPMC_A[4]/GP0[12]/ **BTMODE[3]**	AE1			GPMC, GP0 PINCTRL225	
GPMC_A[3]/GP0[11]/ **BTMODE[2]**	AE3			GPMC, GP0 PINCTRL224	
GPMC_A[2]/GP0[10]/ **BTMODE[1]**	AE4			GPMC, GP0 PINCTRL223	
GPMC_A[1]/GP0[9]/ **BTMODE[0]**	AE5			GPMC, GP0 PINCTRL222	
DEVICE CONTROL					
GPMC_A[8]/GP0[16]/ **CS0BW**	AD4	I	PULL: IPU / DIS DRIVE: Z / Z DVDD_3P3	GPMC, GP0 PINCTRL229	GPMC CS0 default Data Bus Width input 0 = 8-bit data bus 1 = 16-bit data bus The CS0BW pin is also used by the ROM bootloader to set up the size of BAR ranges in PCIe boot mode.(4)
GPMC_A[7]/GP0[15]/ **CS0MUX[1]**	AD3	I	PULL: IPU / DIS DRIVE: Z / Z DVDD_3P3	GPMC, GP0 PINCTRL228	GPMC CS0 default Address/Data multiplexing mode input 00 = Not multiplexed 01 = A/A/D muxed 10 = A/D muxed 11 = Reserved The CS0MUX[1:0] pins are also used by the ROM bootloader to set up the size of BAR ranges in PCIe boot mode.(4)
GPMC_A[6]/GP0[14]/ **CS0MUX[0]**	AD8			GPMC, GP0 PINCTRL227	
GPMC_A[9]/GP0[17]/ **CS0WAIT**	AD2	I	PULL: IPU / DIS DRIVE: Z / Z DVDD_3P3	GPMC, GP0 PINCTRL230	GPMC CS0 default GPMC_Wait enable input 0 = Wait disabled 1 = Wait enabled The CS0WAIT pin is also used by the ROM bootloader to set up the size of BAR ranges in PCIe boot mode.(4)

(1) I = Input, O = Output, Z = High impedance, S = Supply voltage, GND = Ground, A = Analog signal.
(2) PULL: A / B, where:
A is the state of the internal pull resistor during $\overline{\text{POR}}$ reset
B is the state of the internal pull resistor after $\overline{\text{POR}}$ and Warm reset are de-asserted **and** during Warm reset
IPD = Internal Pulldown Enabled, IPU = Internal Pullup Enabled, DIS = Internal Pull Disabled
DRIVE: A / B, where;
A is the driving state of the pin during $\overline{\text{POR}}$ reset
B is the driving state of the pin after $\overline{\text{POR}}$ and Warm reset are de-asserted **and** during Warm reset
H = Driving High, L = Driving Low, Z = 3-State
For more detailed information on pullup and pulldown resistors and situations where external pullup and pulldown resistors are required, see Section 6.3.1, *Pullup and Pulldown Resistors*.
(3) Specifies the operating IO supply voltage for each signal.
(4) For details on the BAR ranges setup, see the ROM Code Memory and Peripheral Booting chapter of the *AM389x Sitara ARM Processors Technical Reference Manual* (literature number SPRUGX7).

Copyright © 2010–2015, Texas Instruments Incorporated

4.2.2 DDR2 and DDR3 Memory Controller Signals

Table 4-2. DDR2 and DDR3 Memory Controller 0 Terminal Functions

SIGNAL NAME	SIGNAL NO.	TYPE(1)	OTHER(2)	DESCRIPTION
DDR[0]_CLK[0]	B12	O	DVDD_DDR[0]	DDR[0] Clock 0
$\overline{\text{DDR[0]_CLK[0]}}$	A12	O	DVDD_DDR[0]	DDR[0] Negative Clock 0
DDR[0]_CLK[1]	A15	O	DVDD_DDR[0]	DDR[0] Clock 1
$\overline{\text{DDR[0]_CLK[1]}}$	B15	O	DVDD_DDR[0]	DDR[0] Negative Clock 1
DDR[0]_CKE	C18	O	DVDD_DDR[0]	DDR[0] Clock Enable
$\overline{\text{DDR[0]_WE}}$	E13	O	DVDD_DDR[0]	DDR[0] Write Enable
$\overline{\text{DDR[0]_CS[0]}}$	B17	O	DVDD_DDR[0]	DDR[0] Chip Select 0
$\overline{\text{DDR[0]_CS[1]}}$	F18	O	DVDD_DDR[0]	DDR[0] Chip Select 1
$\overline{\text{DDR[0]_RAS}}$	D13	O	DVDD_DDR[0]	DDR[0] Row Address Strobe output
$\overline{\text{DDR[0]_CAS}}$	C13	O	DVDD_DDR[0]	DDR[0] Column Address Strobe output
DDR[0]_DQM[3]	D9	O	DVDD_DDR[0]	DDR[0] Data Mask outputs DDR[0]_DQM[3]: For upper byte data bus DDR[0]_D[31:24] DDR[0]_DQM[2]: For DDR[0]_D[23:16] DDR[0]_DQM[1]: For DDR[0]_D[15:8] DDR[0]_DQM[0]: For lower byte data bus DDR[0]_D[7:0]
DDR[0]_DQM[2]	G9	O	DVDD_DDR[0]	
DDR[0]_DQM[1]	B5	O	DVDD_DDR[0]	
DDR[0]_DQM[0]	C2	O	DVDD_DDR[0]	
DDR[0]_DQS[3]	B9	IO	DVDD_DDR[0]	Data strobe input/outputs for each byte of the 32-bit data bus. They are outputs to the DDR[0] memory when writing and inputs when reading. They are used to synchronize the data transfers. DDR[0]_DQS[3]: For upper byte data bus DDR[0]_D[31:24] DDR[0]_DQS[2]: For DDR[0]_D[23:16] DDR[0]_DQS[1]: For DDR[0]_D[15:8] DDR[0]_DQS[0]: For lower byte data bus DDR[0]_D[7:0]
DDR[0]_DQS[2]	B8	IO	DVDD_DDR[0]	
DDR[0]_DQS[1]	B4	IO	DVDD_DDR[0]	
DDR[0]_DQS[0]	F4	IO	DVDD_DDR[0]	
$\overline{\text{DDR[0]_DQS[3]}}$	A9	IO	DVDD_DDR[0]	Complementary data strobe input/outputs for each byte of the 32-bit data bus. They are outputs to the DDR[0] memory when writing and inputs when reading. They are used to synchronize the data transfers. $\overline{\text{DDR[0]_DQS[3]}}$: For upper byte data bus DDR[0]_D[31:24] $\overline{\text{DDR[0]_DQS[2]}}$: For DDR[0]_D[23:16] $\overline{\text{DDR[0]_DQS[1]}}$: For DDR[0]_D[15:8] $\overline{\text{DDR[0]_DQS[0]}}$: For lower byte data bus DDR[0]_D[7:0]
$\overline{\text{DDR[0]_DQS[2]}}$	A8	IO	DVDD_DDR[0]	
$\overline{\text{DDR[0]_DQS[1]}}$	A4	IO	DVDD_DDR[0]	
$\overline{\text{DDR[0]_DQS[0]}}$	E3	IO	DVDD_DDR[0]	
DDR[0]_ODT[0]	E18	O	DVDD_DDR[0]	DDR[0] On-Die Termination for Chip Select 0.
DDR[0]_ODT[1]	A16	O	DVDD_DDR[0]	DDR[0] On-Die Termination for Chip Select 1.
$\overline{\text{DDR[0]_RST}}$	D18	O	DVDD_DDR[0]	DDR[0] Reset output
DDR[0]_BA[2]	N15	O	DVDD_DDR[0]	DDR[0] Bank Address outputs
DDR[0]_BA[1]	B14	O	DVDD_DDR[0]	
DDR[0]_BA[0]	F13	O	DVDD_DDR[0]	

(1) I = Input, O = Output, Z = High impedance, S = Supply voltage, GND = Ground, A = Analog signal.
(2) Specifies the operating IO supply voltage for each signal.

Copyright © 2010–2015, Texas Instruments Incorporated

Table 4-2. DDR2 and DDR3 Memory Controller 0 Terminal Functions (continued)

SIGNAL NAME	SIGNAL NO.	TYPE(1)	OTHER(2)	DESCRIPTION
DDR[0]_A[14]	D17	O	DVDD_DDR[0]	DDR[0] Address Bus
DDR[0]_A[13]	B16	O	DVDD_DDR[0]	
DDR[0]_A[12]	N16	O	DVDD_DDR[0]	
DDR[0]_A[11]	B13	O	DVDD_DDR[0]	
DDR[0]_A[10]	C14	O	DVDD_DDR[0]	
DDR[0]_A[9]	K13	O	DVDD_DDR[0]	
DDR[0]_A[8]	N14	O	DVDD_DDR[0]	
DDR[0]_A[7]	A14	O	DVDD_DDR[0]	
DDR[0]_A[6]	L13	O	DVDD_DDR[0]	
DDR[0]_A[5]	J13	O	DVDD_DDR[0]	
DDR[0]_A[4]	H13	O	DVDD_DDR[0]	
DDR[0]_A[3]	G13	O	DVDD_DDR[0]	
DDR[0]_A[2]	D15	O	DVDD_DDR[0]	
DDR[0]_A[1]	N17	O	DVDD_DDR[0]	
DDR[0]_A[0]	A13	O	DVDD_DDR[0]	
DDR[0]_D[31]	C9	IO	DVDD_DDR[0]	DDR[0] Data Bus
DDR[0]_D[30]	J11	IO	DVDD_DDR[0]	
DDR[0]_D[29]	C11	IO	DVDD_DDR[0]	
DDR[0]_D[28]	G10	IO	DVDD_DDR[0]	
DDR[0]_D[27]	E8	IO	DVDD_DDR[0]	
DDR[0]_D[26]	B10	IO	DVDD_DDR[0]	
DDR[0]_D[25]	B11	IO	DVDD_DDR[0]	
DDR[0]_D[24]	E9	IO	DVDD_DDR[0]	
DDR[0]_D[23]	E7	IO	DVDD_DDR[0]	
DDR[0]_D[22]	F9	IO	DVDD_DDR[0]	
DDR[0]_D[21]	D8	IO	DVDD_DDR[0]	
DDR[0]_D[20]	F8	IO	DVDD_DDR[0]	
DDR[0]_D[19]	B7	IO	DVDD_DDR[0]	
DDR[0]_D[18]	H10	IO	DVDD_DDR[0]	
DDR[0]_D[17]	A7	IO	DVDD_DDR[0]	
DDR[0]_D[16]	C8	IO	DVDD_DDR[0]	

Copyright © 2010–2015, Texas Instruments Incorporated

Table 4-2. DDR2 and DDR3 Memory Controller 0 Terminal Functions (continued)

SIGNAL NAME	SIGNAL NO.	TYPE(1)	OTHER(2)	DESCRIPTION
DDR[0]_D[15]	B3	IO	DVDD_DDR[0]	DDR[0] Data Bus
DDR[0]_D[14]	A3	IO	DVDD_DDR[0]	
DDR[0]_D[13]	B6	IO	DVDD_DDR[0]	
DDR[0]_D[12]	A5	IO	DVDD_DDR[0]	
DDR[0]_D[11]	D6	IO	DVDD_DDR[0]	
DDR[0]_D[10]	C6	IO	DVDD_DDR[0]	
DDR[0]_D[9]	D7	IO	DVDD_DDR[0]	
DDR[0]_D[8]	C5	IO	DVDD_DDR[0]	
DDR[0]_D[7]	C1	IO	DVDD_DDR[0]	
DDR[0]_D[6]	F3	IO	DVDD_DDR[0]	
DDR[0]_D[5]	B2	IO	DVDD_DDR[0]	
DDR[0]_D[4]	D2	IO	DVDD_DDR[0]	
DDR[0]_D[3]	G4	IO	DVDD_DDR[0]	
DDR[0]_D[2]	E2	IO	DVDD_DDR[0]	
DDR[0]_D[1]	F2	IO	DVDD_DDR[0]	
DDR[0]_D[0]	B1	IO	DVDD_DDR[0]	
DDR[0]_VTP	A6	I	DVDD_DDR[0]	DDR VTP Compensation Resistor Connection

Table 4-3. DDR2 and DDR3 Memory Controller 1 Terminal Functions

SIGNAL NAME	NO.	TYPE(1)	OTHER(2)	DESCRIPTION
DDR[1]_CLK[0]	B26	O	DVDD_DDR[1]	DDR[1] Clock 0
$\overline{\text{DDR[1]_CLK[0]}}$	A26	O	DVDD_DDR[1]	DDR[1] Negative Clock 0
DDR[1]_CLK[1]	A23	O	DVDD_DDR[1]	DDR[1] Clock 1
$\overline{\text{DDR[1]_CLK[1]}}$	B23	O	DVDD_DDR[1]	DDR[1] Negative Clock 1
DDR[1]_CKE	C20	O	DVDD_DDR[1]	DDR[1] Clock Enable
$\overline{\text{DDR[1]_WE}}$	E25	O	DVDD_DDR[1]	DDR[1] Write Enable
$\overline{\text{DDR[1]_CS[0]}}$	B21	O	DVDD_DDR[1]	DDR[1] Chip Select 0
$\overline{\text{DDR[1]_CS[1]}}$	F20	O	DVDD_DDR[1]	DDR[1] Chip Select 1
$\overline{\text{DDR[1]_RAS}}$	D25	O	DVDD_DDR[1]	DDR[1] Row Address Strobe output
$\overline{\text{DDR[1]_CAS}}$	C25	O	DVDD_DDR[1]	DDR[1] Column Address Strobe output
DDR[1]_DQM[3]	D29	O	DVDD_DDR[1]	DDR[1] Data Mask outputs DDR[1]_DQM[3]: For upper byte data bus DDR[1]_D[31:24] DDR[1]_DQM[2]: For DDR[1]_D[23:16] DDR[1]_DQM[1]: For DDR[1]_D[15:8] DDR[1]_DQM[0]: For lower byte data bus DDR[1]_D[7:0]
DDR[1]_DQM[2]	G29	O	DVDD_DDR[1]	
DDR[1]_DQM[1]	B33	O	DVDD_DDR[1]	
DDR[1]_DQM[0]	C36	O	DVDD_DDR[1]	
DDR[1]_DQS[3]	B29	O	DVDD_DDR[1]	Data strobe input/outputs for each byte of the 32-bit data bus. They are outputs to the DDR[1] memory when writing and inputs when reading. They are used to synchronize the data transfers. DDR[1]_DQS[3]: For upper byte data bus DDR[1]_D[31:24] DDR[1]_DQS[2]: For DDR[1]_D[23:16] DDR[1]_DQS[1]: For DDR[1]_D[15:8] DDR[1]_DQS[0]: For lower byte data bus DDR[1]_D[7:0]
DDR[1]_DQS[2]	B30	IO	DVDD_DDR[1]	
DDR[1]_DQS[1]	B34	IO	DVDD_DDR[1]	
DDR[1]_DQS[0]	F34	IO	DVDD_DDR[1]	
$\overline{\text{DDR[1]_DQS[3]}}$	A29	IO	DVDD_DDR[1]	Complementary data strobe input/outputs for each byte of the 32-bit data bus. They are outputs to the DDR[1] memory when writing and inputs when reading. They are used to synchronize the data transfers. $\overline{\text{DDR[1]_DQS[3]}}$: For upper byte data bus DDR[1]_D[31:24] $\overline{\text{DDR[1]_DQS[2]}}$: For DDR[1]_D[23:16] $\overline{\text{DDR[1]_DQS[1]}}$: For DDR[1]_D[15:8] $\overline{\text{DDR[1]_DQS[0]}}$: For lower byte data bus DDR[1]_D[7:0]
$\overline{\text{DDR[1]_DQS[2]}}$	A30	IO	DVDD_DDR[1]	
$\overline{\text{DDR[1]_DQS[1]}}$	A34	IO	DVDD_DDR[1]	
$\overline{\text{DDR[1]_DQS[0]}}$	E35	IO	DVDD_DDR[1]	
DDR[1]_ODT[0]	E20	O	DVDD_DDR[1]	DDR[1] On-Die Termination for Chip Select 0.
DDR[1]_ODT[1]	A22	O	DVDD_DDR[1]	DDR[1] On-Die Termination for Chip Select 1.
$\overline{\text{DDR[1]_RST}}$	D20	O	DVDD_DDR[1]	DDR[1] Reset output
DDR[1]_BA[2]	N23	O	DVDD_DDR[1]	DDR[1] Bank Address outputs
DDR[1]_BA[1]	B24	O	DVDD_DDR[1]	
DDR[1]_BA[0]	F25	O	DVDD_DDR[1]	
DDR[1]_A[14]	D21	O	DVDD_DDR[1]	DDR[1] Address Bus
DDR[1]_A[13]	B22	O	DVDD_DDR[1]	
DDR[1]_A[12]	N22	O	DVDD_DDR[1]	
DDR[1]_A[11]	B25	O	DVDD_DDR[1]	
DDR[1]_A[10]	C24	O	DVDD_DDR[1]	
DDR[1]_A[9]	K25	O	DVDD_DDR[1]	
DDR[1]_A[8]	N24	O	DVDD_DDR[1]	
DDR[1]_A[7]	A24	O	DVDD_DDR[1]	
DDR[1]_A[6]	L25	O	DVDD_DDR[1]	
DDR[1]_A[5]	J25	O	DVDD_DDR[1]	
DDR[1]_A[4]	H25	O	DVDD_DDR[1]	
DDR[1]_A[3]	G25	O	DVDD_DDR[1]	
DDR[1]_A[2]	D23	O	DVDD_DDR[1]	
DDR[1]_A[1]	N21	O	DVDD_DDR[1]	
DDR[1]_A[0]	A25	O	DVDD_DDR[1]	

(1) I = Input, O = Output, Z = High impedance, S = Supply voltage, GND = Ground, A = Analog signal.
(2) Specifies the operating IO supply voltage for each signal.

Copyright © 2010–2015, Texas Instruments Incorporated

Table 4-3. DDR2 and DDR3 Memory Controller 1 Terminal Functions (continued)

SIGNAL NAME	SIGNAL NO.	TYPE(1)	OTHER(2)	DESCRIPTION
DDR[1]_D[31]	C29	IO	DVDD_DDR[1]	DDR[1] Data Bus
DDR[1]_D[30]	J27	IO	DVDD_DDR[1]	
DDR[1]_D[29]	C27	IO	DVDD_DDR[1]	
DDR[1]_D[28]	G28	IO	DVDD_DDR[1]	
DDR[1]_D[27]	E30	IO	DVDD_DDR[1]	
DDR[1]_D[26]	B28	IO	DVDD_DDR[1]	
DDR[1]_D[25]	B27	IO	DVDD_DDR[1]	
DDR[1]_D[24]	E29	IO	DVDD_DDR[1]	
DDR[1]_D[23]	E31	IO	DVDD_DDR[1]	
DDR[1]_D[22]	F29	IO	DVDD_DDR[1]	
DDR[1]_D[21]	D30	IO	DVDD_DDR[1]	
DDR[1]_D[20]	F30	IO	DVDD_DDR[1]	
DDR[1]_D[19]	B31	IO	DVDD_DDR[1]	
DDR[1]_D[18]	H28	IO	DVDD_DDR[1]	
DDR[1]_D[17]	A31	IO	DVDD_DDR[1]	
DDR[1]_D[16]	C30	IO	DVDD_DDR[1]	
DDR[1]_D[15]	B35	IO	DVDD_DDR[1]	DDR[1] Data Bus
DDR[1]_D[14]	A35	IO	DVDD_DDR[1]	
DDR[1]_D[13]	B32	IO	DVDD_DDR[1]	
DDR[1]_D[12]	A33	IO	DVDD_DDR[1]	
DDR[1]_D[11]	D32	IO	DVDD_DDR[1]	
DDR[1]_D[10]	C32	IO	DVDD_DDR[1]	
DDR[1]_D[9]	D31	IO	DVDD_DDR[1]	
DDR[1]_D[8]	C33	IO	DVDD_DDR[1]	
DDR[1]_D[7]	C37	IO	DVDD_DDR[1]	
DDR[1]_D[6]	F35	IO	DVDD_DDR[1]	
DDR[1]_D[5]	B36	IO	DVDD_DDR[1]	
DDR[1]_D[4]	D36	IO	DVDD_DDR[1]	
DDR[1]_D[3]	G34	IO	DVDD_DDR[1]	
DDR[1]_D[2]	E36	IO	DVDD_DDR[1]	
DDR[1]_D[1]	F36	IO	DVDD_DDR[1]	
DDR[1]_D[0]	B37	IO	DVDD_DDR[1]	
DDR[1]_VTP	A32	I	DVDD_DDR[1]	DDR VTP Compensation Resistor Connection

4.2.3 Ethernet Media Access Controller (EMAC) Signals

Table 4-4. EMAC Terminal Functions

SIGNAL NAME	SIGNAL NO.	TYPE(1)	OTHER(2) (3)	MUXED	DESCRIPTION
MDIO_MCLK	AH37	O	PULL: IPU / IPU DRIVE: H / H DVDD_3P3	- PINCTRL275	Management Data Serial Clock output
MDIO_MDIO	AH36	IO	PULL: IPU / IPU DRIVE: Z / Z DVDD_3P3	- PINCTRL276	Management Data IO
EMAC0					
EMAC[0]_COL	AB25	I	PULL: IPD / IPD DRIVE: Z / Z DVDD_3P3	- PINCTRL251	[G]MII Collision Detect (Sense) input
EMAC[0]_CRS	AA25	I	PULL: IPD / IPD DRIVE: Z / Z DVDD_3P3	- PINCTRL252	[G]MII Carrier Sense input
EMAC[0]_GMTCLK	AC37	O	PULL: IPD / DIS DRIVE: L / L DVDD_3P3	- PINCTRL253	GMII Source Asynchronous Transmit Clock
EMAC[0]_RXCLK	AE37	I	PULL: IPU / IPU DRIVE: Z / Z DVDD_3P3	- PINCTRL254	[G]MII Receive Clock
EMAC[0]_RXD[7]	AE36	I	PULL: IPU / IPU DRIVE: Z / Z DVDD_3P3	- PINCTRL262	[G]MII Receive Data [7:0]. For 1000 EMAC GMII operation, EMAC[0]_RXD[7:0] are used. For 10/100 EMAC MII operation, *only* EMAC[0]_RXD[3:0] are used.
EMAC[0]_RXD[6]	AC25			- PINCTRL261	
EMAC[0]_RXD[5]	AD25			- PINCTRL260	
EMAC[0]_RXD[4]	AC35			- PINCTRL259	
EMAC[0]_RXD[3]	AD35			- PINCTRL258	
EMAC[0]_RXD[2]	AC36			- PINCTRL257	
EMAC[0]_RXD[1]	AD36			- PINCTRL256	
EMAC[0]_RXD[0]	AD37			- PINCTRL255	
EMAC[0]_RXDV	AE35	I	PULL: IPU / IPU DRIVE: Z / Z DVDD_3P3	- PINCTRL263	[G]MII Receive Data Valid input
EMAC[0]_RXER	AE34	I	PULL: IPU / IPU DRIVE: Z / Z DVDD_3P3	- PINCTRL264	[G]MII Receive Data Error input
EMAC[0]_TXCLK	AF37	I	PULL: IPD / DIS DRIVE: Z / Z DVDD_3P3	- PINCTRL265	[G]MII Transmit Clock input

(1) I = Input, O = Output, Z = High impedance, S = Supply voltage, GND = Ground, A = Analog signal.
(2) PULL: A / B, where:
A is the state of the internal pull resistor during $\overline{\text{POR}}$ reset
B is the state of the internal pull resistor after $\overline{\text{POR}}$ and Warm reset are de-asserted **and** during Warm reset
IPD = Internal Pulldown Enabled, IPU = Internal Pullup Enabled, DIS = Internal Pull Disabled
DRIVE: A / B, where;
A is the driving state of the pin during $\overline{\text{POR}}$ reset
B is the driving state of the pin after $\overline{\text{POR}}$ and Warm reset are de-asserted **and** during Warm reset
H = Driving High, L = Driving Low, Z = 3-State
For more detailed information on pullup and pulldown resistors and situations where external pullup and pulldown resistors are required, see Section 6.3.1, *Pullup and Pulldown Resistors*.
(3) Specifies the operating IO supply voltage for each signal.

Copyright © 2010–2015, Texas Instruments Incorporated

Table 4-4. EMAC Terminal Functions (continued)

SIGNAL NAME	SIGNAL NO.	TYPE(1)	OTHER(2) (3)	MUXED	DESCRIPTION
EMAC[0]_TXD[7]	AG35	O	PULL: IPD / DIS DRIVE: L / L DVDD_3P3	- PINCTRL273	[G]MII Transmit Data [7:0]. For 1000 EMAC GMII operation, EMAC[0]_TXD[7:0] are used. For 10/100 EMAC MII operation, *only* EMAC[0]_TXD[3:0] are used.
EMAC[0]_TXD[6]	AG36			- PINCTRL272	
EMAC[0]_TXD[5]	AF36			- PINCTRL271	
EMAC[0]_TXD[4]	AG28			- PINCTRL270	
EMAC[0]_TXD[3]	AE30			- PINCTRL269	
EMAC[0]_TXD[2]	AE31			- PINCTRL268	
EMAC[0]_TXD[1]	AE32			- PINCTRL267	
EMAC[0]_TXD[0]	AE33			- PINCTRL266	
EMAC[0]_TXEN	AG37	O	PULL: IPD / DIS DRIVE: L / L DVDD_3P3	- PINCTRL274	[G]MII Transmit Data Enable output
EMAC1					
EMAC[1]_COL	AR30	I	PULL: IPD / DIS DRIVE: L / L DVDD_3P3	- PINCTRL72	[G]MII Collision Detect (Sense) input
EMAC[1]_CRS	AN31	I	PULL: IPD / IPD DRIVE: Z / Z DVDD_3P3	- PINCTRL73	[G]MII Carrier Sense input
EMAC[1]_GMTCLK	AU33	O	PULL: IPD / DIS DRIVE: Z / Z DVDD_3P3	- PINCTRL61	GMII Source Asynchronous Transmit Clock
EMAC[1]_RXCLK	AT37	I	PULL: IPD / IPD DRIVE: Z / Z DVDD_3P3	- PINCTRL51	[G]MII Receive Clock
EMAC[1]_RXD[7]	AP32	I	PULL: IPD / IPD DRIVE: Z / Z DVDD_3P3	- PINCTRL59	[G]MII Receive Data [7:0]. For 1000 EMAC GMII operation, EMAC[1]_RXD[7:0] are used. For 10/100 EMAC MII operation, *only* EMAC[1]_RXD[3:0] are used.
EMAC[1]_RXD[6]	AU34			- PINCTRL58	
EMAC[1]_RXD[5]	AR33			- PINCTRL57	
EMAC[1]_RXD[4]	AU35			- PINCTRL56	
EMAC[1]_RXD[3]	AT34			- PINCTRL55	
EMAC[1]_RXD[2]	AU36			- PINCTRL54	
EMAC[1]_RXD[1]	AT35			- PINCTRL53	
EMAC[1]_RXD[0]	AT36			- PINCTRL52	
EMAC[1]_RXDV	AT33	I	PULL: IPD / IPD DRIVE: Z / Z DVDD_3P3	- PINCTRL60	[G]MII Receive Data Valid input
EMAC[1]_RXER	AN30	I	PULL: IPD / DIS DRIVE: L / L DVDD_3P3	- PINCTRL74	[G]MII Receive Data Error input

Copyright © 2010–2015, Texas Instruments Incorporated

Table 4-4. EMAC Terminal Functions (continued)

SIGNAL NAME	SIGNAL NO.	TYPE(1)	OTHER(2) (3)	MUXED	DESCRIPTION
EMAC[1]_TXCLK	AT30	I	PULL: IPD / DIS DRIVE: L / L DVDD_3P3	- PINCTRL71	[G]MII Transmit Clock input
EMAC[1]_TXD[7]	AM30	O	PULL: IPD / DIS DRIVE: Z / Z DVDD_3P3	- PINCTRL69	[G]MII Transmit Data [7:0]. For 1000 EMAC GMII operation, EMAC[1]_TXD[7:0] are used. For 10/100 EMAC MII operation, *only* EMAC[1]_TXD[3:0] are used.
EMAC[1]_TXD[6]	AP30			- PINCTRL68	
EMAC[1]_TXD[5]	AT31			- PINCTRL67	
EMAC[1]_TXD[4]	AU31			- PINCTRL66	
EMAC[1]_TXD[3]	AU32			- PINCTRL65	
EMAC[1]_TXD[2]	AT32			- PINCTRL64	
EMAC[1]_TXD[1]	AR32			- PINCTRL63	
EMAC[1]_TXD[0]	AP31			- PINCTRL62	
EMAC[1]_TXEN	AU30	O	PULL: IPD / DIS DRIVE: Z / Z DVDD_3P3	- PINCTRL70	[G]MII Transmit Data Enable output

Copyright © 2010–2015, Texas Instruments Incorporated

4.2.4 General-Purpose Input/Output (GPIO) Signals

Table 4-5. GPIO Terminal Functions

SIGNAL NAME	SIGNAL NO.	TYPE(1)	OTHER(2) (3)	MUXED	DESCRIPTION
GPIO0					
Note: General-Purpose Input/Output (IO) pins can also serve as external interrupt inputs.					
TIM7_OUT/ GPMC_A[12]/ **GP0[31]**	G1	IO	PULL: IPD / IPD DRIVE: L / L DVDD_3P3	TIM7, GPMC PINCTRL206	General-Purpose Input/Output (IO) 0 [GP0] pin 31.
TIM6_OUT/ GPMC_A[24]/ **GP0[30]**	H1	IO	PULL: IPD / IPD DRIVE: L / L DVDD_3P3	TIM6, GPMC PINCTRL205	General-Purpose Input/Output (IO) 0 [GP0] pin 30.
TIM5_OUT/ **GP0[29]**	H34	IO	PULL: IPD / IPD DRIVE: L / L DVDD_3P3	TIM5 PINCTRL204	General-Purpose Input/Output (IO) 0 [GP0] pin 29.
TIM4_OUT/ **GP0[28]**	H33	IO	PULL: IPD / IPD DRIVE: L / L DVDD_3P3	TIM4 PINCTRL203	General-Purpose Input/Output (IO) 0 [GP0] pin 28.
GPMC_A[12]/ **GP0[27]**	H2	IO	PULL: IPD / DIS DRIVE: L / H DVDD_3P3	GPMC PINCTRL202	General-Purpose Input/Output (IO) 0 [GP0] pin 27.
GPMC_A[21]/ **GP0[26]**	H3	IO	PULL: IPD / DIS DRIVE: L / H DVDD_3P3	GPMC PINCTRL201	General-Purpose Input/Output (IO) 0 [GP0] pin 26.
GP0[25]	H4	IO	PULL: IPU / DIS DRIVE: H / L DVDD_3P3	- PINCTRL200	General-Purpose Input/Output (IO) 0 [GP0] pin 25.
GPMC_A[13]/ **GP0[24]**	H6	IO	PULL: IPU / IPD DRIVE: H / L DVDD_3P3	GPMC PINCTRL199	General-Purpose Input/Output (IO) 0 [GP0] pin 24.
GPMC_A[14]/ **GP0[23]**	H5	IO	PULL: IPD / DIS DRIVE: L / L DVDD_3P3	GPMC PINCTRL198	General-Purpose Input/Output (IO) 0 [GP0] pin 23.
GPMC_A[15]/ **GP0[22]**	J1	IO	PULL: IPU / DIS DRIVE: H / L DVDD_3P3	GPMC PINCTRL197	General-Purpose Input/Output (IO) 0 [GP0] pin 22.
GPMC_A[16]/ **GP0[21]**	J2	IO	PULL: DIS / IPD DRIVE: Z / Z DVDD_3P3	GPMC PINCTRL196	General-Purpose Input/Output (IO) 0 [GP0] pin 21.
GPMC_A[27]/ **GP0[20]**	AC5	IO	PULL: IPD / DIS DRIVE: Z / Z DVDD_3P3	GPMC PINCTRL233	General-Purpose Input/Output (IO) 0 [GP0] pin 20.
GPMC_A[11]/ **GP0[19]**	AC2	IO	PULL: IPD / DIS DRIVE: Z / Z DVDD_3P3	GPMC PINCTRL232	General-Purpose Input/Output (IO) 0 [GP0] pin 19.
GPMC_A[10]/ **GP0[18]**	AD1	IO	PULL: IPD / DIS DRIVE: Z / Z DVDD_3P3	GPMC PINCTRL231	General-Purpose Input/Output (IO) 0 [GP0] pin 18.

(1) I = Input, O = Output, Z = High impedance, S = Supply voltage, GND = Ground, A = Analog signal.
(2) PULL: A / B, where:
A is the state of the internal pull resistor during $\overline{\text{POR}}$ reset
B is the state of the internal pull resistor after $\overline{\text{POR}}$ and Warm reset are de-asserted **and** during Warm reset
IPD = Internal Pulldown Enabled, IPU = Internal Pullup Enabled, DIS = Internal Pull Disabled
DRIVE: A / B, where;
A is the driving state of the pin during $\overline{\text{POR}}$ reset
B is the driving state of the pin after $\overline{\text{POR}}$ and Warm reset are de-asserted **and** during Warm reset
H = Driving High, L = Driving Low, Z = 3-State
For more detailed information on pullup and pulldown resistors and situations where external pullup and pulldown resistors are required, see Section 6.3.1, *Pullup and Pulldown Resistors*.
(3) Specifies the operating IO supply voltage for each signal.

Copyright © 2010–2015, Texas Instruments Incorporated

Table 4-5. GPIO Terminal Functions (continued)

SIGNAL NAME	SIGNAL NO.	TYPE(1)	OTHER(2) (3)	MUXED	DESCRIPTION
GPMC_A[9]/ **GP0[17]**/ CS0WAIT	AD2	IO	PULL: IPU / DIS DRIVE: Z / Z DVDD_3P3	GPMC, BOOT PINCTRL230	General-Purpose Input/Output (IO) 0 [GP0] pin 17.
GPMC_A[8]/ **GP0[16]**/ CS0BW	AD4	IO	PULL: IPU / DIS DRIVE: Z / Z DVDD_3P3	GPMC, BOOT PINCTRL229	General-Purpose Input/Output (IO) 0 [GP0] pin 16.
GPMC_A[7]/ **GP0[15]**/ CS0MUX[1]	AD3	IO	PULL: IPU / DIS DRIVE: Z / Z DVDD_3P3	GPMC, BOOT PINCTRL228	General-Purpose Input/Output (IO) 0 [GP0] pin 15.
GPMC_A[6]/ **GP0[14]**/ CS0MUX[0]	AD8	IO	PULL: IPU / DIS DRIVE: Z / Z DVDD_3P3	GPMC, BOOT PINCTRL227	General-Purpose Input/Output (IO) 0 [GP0] pin 14.
GPMC_A[5]/ **GP0[13]**/ BTMODE[4]	AE2	IO	PULL: IPU / DIS DRIVE: Z / Z DVDD_3P3	GPMC, BOOT PINCTRL226	General-Purpose Input/Output (IO) 0 [GP0] pin 13.
GPMC_A[4]/ **GP0[12]**/ BTMODE[3]	AE1	IO	PULL: IPU / DIS DRIVE: Z / Z DVDD_3P3	GPMC, BOOT PINCTRL225	General-Purpose Input/Output (IO) 0 [GP0] pin 12.
GPMC_A[3]/ **GP0[11]**/ BTMODE[2]	AE3	IO	PULL: IPU / DIS DRIVE: Z / Z DVDD_3P3	GPMC, BOOT PINCTRL224	General-Purpose Input/Output (IO) 0 [GP0] pin 11.
GPMC_A[2]/ **GP0[10]**/ BTMODE[1]	AE4	IO	PULL: IPU / DIS DRIVE: Z / Z DVDD_3P3	GPMC, BOOT PINCTRL223	General-Purpose Input/Output (IO) 0 [GP0] pin 10.
GPMC_A[1]/ **GP0[9]**/ BTMODE[0]	AE5	IO	PULL: IPU / DIS DRIVE: Z / Z DVDD_3P3	GPMC, BOOT PINCTRL222	General-Purpose Input/Output (IO) 0 [GP0] pin 9.
GPMC_A[0]/ **GP0[8]**	AE6	IO	PULL: IPD / DIS DRIVE: Z / Z DVDD_3P3	GPMC PINCTRL221	General-Purpose Input/Output (IO) 0 [GP0] pin 8.
GP0[7]/ MCA[0]_AMUTEIN	H35	IO	PULL: IPD / IPD DRIVE: Z / Z DVDD_3P3	MCA[0] PINCTRL298	General-Purpose Input/Output (IO) 0 [GP0] pin 7.
GP0[6]/ MCA[1]_AMUTEIN/ GPMC_A[23]	G5	IO	PULL: IPD / IPD DRIVE: Z / Z DVDD_3P3	MCA[1], GPMC PINCTRL297	General-Purpose Input/Output (IO) 0 [GP0] pin 6.
GP0[5]/ MCA[2]_AMUTEIN/ GPMC_A[24]	G2	IO	PULL: IPD / IPD DRIVE: Z / Z DVDD_3P3	MCA[2], GPMC PINCTRL296	General-Purpose Input/Output (IO) 0 [GP0] pin 5.
GP0[4]	H32	IO	PULL: IPD / IPD DRIVE: Z / Z DVDD_3P3	- PINCTRL295	General-Purpose Input/Output (IO) 0 [GP0] pin 4.
GP0[3]/ TCLKIN	J31	IO	PULL: IPD / IPD DRIVE: Z / Z DVDD_3P3	Timer CLKIN PINCTRL294	General-Purpose Input/Output (IO) 0 [GP0] pin 3.
GP0[2]	K30	IO	PULL: IPD / IPD DRIVE: Z / Z DVDD_3P3	- PINCTRL293	General-Purpose Input/Output (IO) 0 [GP0] pin 2.
GP0[1]	L29	IO	PULL: IPD / IPD DRIVE: Z / Z DVDD_3P3	- PINCTRL292	General-Purpose Input/Output (IO) 0 [GP0] pin 1.
GP0[0]	K31	IO	PULL: IPD / IPD DRIVE: Z / Z DVDD_3P3	- PINCTRL291	General-Purpose Input/Output (IO) 0 [GP0] pin 0.

Copyright © 2010–2015, Texas Instruments Incorporated

Table 4-5. GPIO Terminal Functions (continued)

SIGNAL NAME	NO.	TYPE(1)	OTHER(2) (3)	MUXED	DESCRIPTION
GPIO1					
Note: General-Purpose Input/Output (IO) pins can also serve as external interrupt inputs.					
GP1[31]/ SATA_ACT1_LED (silicon revision 1.x) SATA_ACT0_LED (silicon revision 2.x)	J33	IO	PULL: IPD / IPD DRIVE: Z / Z DVDD_3P3	SATA PINCTRL300	General-Purpose Input/Output (IO) 1 [GP1] pin 31.
GP1[30]/ SATA_ACT0_LED (silicon revision 1.x) SATA_ACT1_LED (silicon revision 2.x)	J32	IO	PULL: IPD / IPD DRIVE: Z / Z DVDD_3P3	SATA PINCTRL299	General-Purpose Input/Output (IO) 1 [GP1] pin 30.
GPMC_CLK/ **GP1[29]**	V1	IO	PULL: IPD / DIS DRIVE: L / L DVDD_3P3	GPMC PINCTRL250	General-Purpose Input/Output (IO) 1 [GP1] pin 29.
$\overline{\text{UART0_CTS}}$/ **GP1[28]**	N7	IO	PULL: IPU / IPU DRIVE: Z / Z DVDD_3P3	UART0 PINCTRL176	General-Purpose Input/Output (IO) 1 [GP1] pin 28.
$\overline{\text{UART0_RTS}}$/ **GP1[27]**	N9	IO	PULL: IPU / DIS DRIVE: H / H DVDD_3P3	UART0 PINCTRL175	General-Purpose Input/Output (IO) 1 [GP1] pin 27.
$\overline{\text{UART1_CTS}}$/ GPMC_A[13]/ GPMC_A[17]/ **GP1[26]**	L3	IO	PULL: IPU / IPU DRIVE: Z / Z DVDD_3P3	UART1, GPMC PINCTRL184	General-Purpose Input/Output (IO) 1 [GP1] pin 26.
$\overline{\text{UART1_RTS}}$/ GPMC_A[14]/ GPMC_A[18]/ **GP1[25]**	M2	IO	PULL: IPU / DIS DRIVE: H / H DVDD_3P3	UART1, GPMC PINCTRL183	General-Purpose Input/Output (IO) 1 [GP1] pin 25.
$\overline{\text{UART2_CTS}}$/ GPMC_A[16]/ GPMC_A[25]/ **GP1[24]**	K7	IO	PULL: IPU / IPU DRIVE: Z / Z DVDD_3P3	UART2, GPMC PINCTRL188	General-Purpose Input/Output (IO) 1 [GP1] pin 24.
$\overline{\text{UART2_RTS}}$/ GPMC_A[15]/ GPMC_A[26]/ **GP1[23]**	L9	IO	PULL: IPU / DIS DRIVE: H / H DVDD_3P3	UART2, GPMC PINCTRL187	General-Purpose Input/Output (IO) 1 [GP1] pin 23.
$\overline{\text{SPI_SCS[3]}}$/ **GPMC_A[21]**/ GP1[22]	P1	IO	PULL: DIS / IPU DRIVE: Z / Z DVDD_3P3	SPI, GPMC PINCTRL170	General-Purpose Input/Output (IO) 1 [GP1] pin 22.
$\overline{\text{GPMC_CS[4]}}$/ **GP1[21]**	AG3	IO	PULL: IPU / IPU DRIVE: H / H DVDD_3P3	GPMC PINCTRL211	General-Purpose Input/Output (IO) 1 [GP1] pin 21.
GPMC_DIR/ **GP1[20]**	AE7	IO	PULL: IPD / DIS DRIVE: L / H DVDD_3P3	GPMC PINCTRL218	General-Purpose Input/Output (IO) 1 [GP1] pin 20.
UART0_RIN/ GPMC_A[17]/ GPMC_A[22]/ **GP1[19]**	N3	IO	PULL: IPU / IPU DRIVE: Z / Z DVDD_3P3	UART0, GPMC PINCTRL180	General-Purpose Input/Output (IO) 1 [GP1] pin 19.
$\overline{\text{UART0_DCD}}$/ GPMC_A[18]/ GPMC_A[23]/ **GP1[18]**	N5	IO	PULL: IPU / IPU DRIVE: Z / Z DVDD_3P3	UART0, GPMC PINCTRL179	General-Purpose Input/Output (IO) 1 [GP1] pin 18.
$\overline{\text{UART0_DSR}}$/ GPMC_A[19]/ GPMC_A[24]/ **GP1[17]**	N4	IO	PULL: IPU / IPU DRIVE: Z / Z DVDD_3P3	UART0, GPMC PINCTRL178	General-Purpose Input/Output (IO) 1 [GP1] pin 17.

Copyright © 2010–2015, Texas Instruments Incorporated

Table 4-5. GPIO Terminal Functions (continued)

SIGNAL NAME	SIGNAL NO.	TYPE(1)	OTHER(2) (3)	MUXED	DESCRIPTION
UART0_DTR/ GPMC_A[20]/ GPMC_A[12]/ **GP1[16]**	N6	IO	PULL: IPU / DIS DRIVE: H / H DVDD_3P3	UART0, GPMC PINCTRL177	General-Purpose Input/Output (IO) 1 [GP1] pin 16.
GPMC_A[24]/ GP1[15]	J3	IO	PULL: IPD / DIS DRIVE: L / H DVDD_3P3	GPMC PINCTRL195	General-Purpose Input/Output (IO) 1 [GP1] pin 15.
GPMC_A[23]/ **GP1[14]**	J4	IO	PULL: IPD / DIS DRIVE: L / H DVDD_3P3	GPMC PINCTRL194	General-Purpose Input/Output (IO) 1 [GP1] pin 14.
GP1[13]	J5	IO	PULL: IPU / DIS DRIVE: H / L DVDD_3P3	- PINCTRL193	General-Purpose Input/Output (IO) 1 [GP1] pin 13.
GPMC_A[25]/ **GP1[12]**	J7	IO	PULL: IPU / IPD DRIVE: H / L DVDD_3P3	GPMC PINCTRL192	General-Purpose Input/Output (IO) 1 [GP1] pin 12.
GPMC_A[26]/ **GP1[11]**	J6	IO	PULL: IPD / DIS DRIVE: L / L DVDD_3P3	GPMC PINCTRL191	General-Purpose Input/Output (IO) 1 [GP1] pin 11.
GPMC_A[22]/ **GP1[10]**	K2	IO	PULL: IPU / DIS DRIVE: H / L DVDD_3P3	GPMC PINCTRL190	General-Purpose Input/Output (IO) 1 [GP1] pin 10.
GPMC_A[27]/ **GP1[9]**	K8	IO	PULL: DIS / IPD DRIVE: Z / Z DVDD_3P3	GPMC PINCTRL189	General-Purpose Input/Output (IO) 1 [GP1] pin 9.
SD_SDWP/ GPMC_A[15]/ **GP1[8]**	R5	IO	PULL: IPD / IPD DRIVE: Z / Z DVDD_3P3	SD, GPMC PINCTRL165	General-Purpose Input/Output (IO) 1 [GP1] pin 8.
SD_SDCD/ GPMC_A[16]/ **GP1[7]**	R13	IO	PULL: IPD / IPD DRIVE: Z / Z DVDD_3P3	SD, GPMC PINCTRL164	General-Purpose Input/Output (IO) 1 [GP1] pin 7.
SD_DAT[3]/ GPMC_A[17]/ **GP1[6]**	T13	IO	PULL: IPD / IPD DRIVE: Z / Z DVDD_3P3	SD, GPMC PINCTRL163	General-Purpose Input/Output (IO) 1 [GP1] pin 6.
SD_DAT[2]_SDRW/ GPMC_A[18]/ **GP1[5]**	T2	IO	PULL: IPD / IPD DRIVE: Z / Z DVDD_3P3	SD, GPMC PINCTRL162	General-Purpose Input/Output (IO) 1 [GP1] pin 5.
SD_DAT[1]_SDIRQ/ GPMC_A[19]/ **GP1[4]**	T1	IO	PULL: IPD / IPD DRIVE: Z / Z DVDD_3P3	SD, GPMC PINCTRL161	General-Purpose Input/Output (IO) 1 [GP1] pin 4.
SD_DAT[0]/ GPMC_A[20]/ **GP1[3]**	U1	IO	PULL: IPD / IPD DRIVE: Z / Z DVDD_3P3	SD, GPMC PINCTRL160	General-Purpose Input/Output (IO) 1 [GP1] pin 3.
SD_CMD/ GPMC_A[21]/ **GP1[2]**	U3	IO	PULL: IPD / DIS DRIVE: Z / Z DVDD_3P3	SD, GPMC PINCTRL159	General-Purpose Input/Output (IO) 1 [GP1] pin 2.
SD_CLK/ GPMC_A[13]/ **GP1[1]**	U2	IO	PULL: IPD / DIS DRIVE: L / L DVDD_3P3	SD, GPMC PINCTRL158	General-Purpose Input/Output (IO) 1 [GP1] pin 1.
SD_POW/ GPMC_A[14]/ **GP1[0]**	U4	IO	PULL: IPD / DIS DRIVE: L / L DVDD_3P3	SD, GPMC PINCTRL157	General-Purpose Input/Output (IO) 1 [GP1] pin 0.

Copyright © 2010–2015, Texas Instruments Incorporated

4.2.5 General-Purpose Memory Controller (GPMC) Signals

Table 4-6. GPMC Terminal Functions

SIGNAL NAME	SIGNAL NO.	TYPE(1)	OTHER(2) (3)	MUXED	DESCRIPTION
GPMC_CLK/ GP1[29]	V1	O	PULL: IPD / DIS DRIVE: L / L DVDD_3P3	GP1	GPMC Clock output
$\overline{\text{GPMC_CS[5]}}$ / GPMC_A[12]	AG1	O	PULL: IPU / IPU DRIVE: H / H DVDD_3P3	GPMC PINCTRL212	GPMC Chip Select 5
$\overline{\text{GPMC_CS[4]}}$ / GP1[21]	AG3	O	PULL: IPU / IPU DRIVE: H / H DVDD_3P3	GP1 PINCTRL211	GPMC Chip Select 4
$\overline{\text{GPMC_CS[3]}}$	AG9	O	PULL: IPU / IPU DRIVE: H / H DVDD_3P3	- PINCTRL210	GPMC Chip Select 3
$\overline{\text{GPMC_CS[2]}}$	AH2	O	PULL: IPU / IPU DRIVE: H / H DVDD_3P3	- PINCTRL209	GPMC Chip Select 2
$\overline{\text{GPMC_CS[1]}}$	AH1	O	PULL: IPU / IPU DRIVE: H / H DVDD_3P3	- PINCTRL208	GPMC Chip Select 1
$\overline{\text{GPMC_CS[0]}}$	AH7	O	PULL: IPU / IPU DRIVE: H / H DVDD_3P3	- PINCTRL207	GPMC Chip Select 0
$\overline{\text{GPMC_WE}}$	AG2	O	PULL: IPU / IPU DRIVE: H / H DVDD_3P3	- PINCTRL213	GPMC Write Enable output
$\overline{\text{GPMC_OE_RE}}$	AF2	O	PULL: IPU / DIS DRIVE: H / H DVDD_3P3	- PINCTRL214	GPMC Output Enable output
$\overline{\text{GPMC_BE1}}$	AF1	O	PULL: IPU / DIS DRIVE: H / H DVDD_3P3	- PINCTRL216	GPMC Upper Byte Enable output
GPMC_$\overline{\text{BE0}}$_CLE	AE11	O	PULL: IPU / DIS DRIVE: H / L DVDD_3P3	- PINCTRL215	GPMC Lower Byte Enable output or Command Latch Enable output
GPMC_$\overline{\text{ADV}}$_ALE	AE10	O	PULL: IPU / DIS DRIVE: H / L DVDD_3P3	- PINCTRL217	GPMC Address Valid output or Address Latch Enable output
GPMC_DIR/ GP1[20]	AE7	O	PULL: IPD / DIS DRIVE: L / H DVDD_3P3	GP1 PINCTRL218	GPMC Direction Control for External Transceivers
$\overline{\text{GPMC_WP}}$	AE9	O	PULL: IPU / IPD DRIVE: H / L DVDD_3P3	- PINCTRL219	GPMC Write Protect output
GPMC_WAIT	AE8	I	PULL: IPD / IPD DRIVE: Z / Z DVDD_3P3	- PINCTRL220	GPMC Wait input

(1) I = Input, O = Output, Z = High impedance, S = Supply voltage, GND = Ground, A = Analog signal.
(2) PULL: A / B, where:
A is the state of the internal pull resistor during $\overline{\text{POR}}$ reset
B is the state of the internal pull resistor after $\overline{\text{POR}}$ and Warm reset are de-asserted **and** during Warm reset
IPD = Internal Pulldown Enabled, IPU = Internal Pullup Enabled, DIS = Internal Pull Disabled
DRIVE: A / B, where;
A is the driving state of the pin during $\overline{\text{POR}}$ reset
B is the driving state of the pin after $\overline{\text{POR}}$ and Warm reset are de-asserted **and** during Warm reset
H = Driving High, L = Driving Low, Z = 3-State
For more detailed information on pullup and pulldown resistors and situations where external pullup and pulldown resistors are required, see Section 6.3.1, *Pullup and Pulldown Resistors*.
(3) Specifies the operating IO supply voltage for each signal.

Copyright © 2010–2015, Texas Instruments Incorporated

Table 4-6. GPMC Terminal Functions (continued)

SIGNAL NAME	SIGNAL NO.	TYPE(1)	OTHER(2) (3)	MUXED	DESCRIPTION
GPMC_A[27]/ GP0[20]	AC5	O	PULL: IPD / DIS DRIVE: Z / Z DVDD_3P3	GP0 PINCTRL233	GPMC Address 27
GPMC_A[27]/ GP1[9]	K8	O	PULL: DIS / IPD DRIVE: Z / Z DVDD_3P3	GP1 PINCTRL189	
UART1_RXD/ **GPMC_A[26]**/ GPMC_A[20]	N1	O	PULL: IPD / IPD DRIVE: Z / Z DVDD_3P3	UART1, GPMC PINCTRL181	GPMC Address 26
$\overline{\text{UART2_RTS}}$/ GPMC_A[15]/ **GPMC_A[26]**/ GP1[23]	L9	O	PULL: IPU / DIS DRIVE: H / H DVDD_3P3	UART2, GPMC, GP1 PINCTRL187	
GPMC_A[26]/ GP1[11]	J6	O	PULL: IPD / DIS DRIVE: L / L DVDD_3P3	GP1 PINCTRL191	
UART1_TXD/ **GPMC_A[25]**/ GPMC_A[19]	N2	O	PULL: IPD / DIS DRIVE: L / H DVDD_3P3	UART1, GPMC PINCTRL182	GPMC Address 25
$\overline{\text{UART2_CTS}}$/ GPMC_A[16]/ **GPMC_A[25]**/ GP1[24]	K7	O	PULL: IPU / IPU DRIVE: Z / Z DVDD_3P3	UART2, GPMC, GP1 PINCTRL188	
GPMC_A[25]/ GP1[12]	J7	O	PULL: IPU / IPD DRIVE: H / L DVDD_3P3	GP1 PINCTRL192	
GP0[5]/ MCA[2]_AMUTEIN/ **GPMC_A[24]**	G2	O	PULL: IPD / IPD DRIVE: Z / Z DVDD_3P3	GP0, MCA[2] PINCTRL296	GPMC Address 24
GPMC_A[24]/ GP1[15]	J3	O	PULL: IPD / DIS DRIVE: L / H DVDD_3P3	GP1 PINCTRL195	
TIM6_OUT/ **GPMC_A[24]**/ GP0[30]	H1	O	PULL: IPD / IPD DRIVE: L / L DVDD_3P3	TIM6, GP0 PINCTRL205	
$\overline{\text{UART0_DSR}}$/ GPMC_A[19]/ **GPMC_A[24]**/ GP1[17]	N4	O	PULL: IPU / IPU DRIVE: Z / Z DVDD_3P3	UART0, GPMC, GP1 PINCTRL178	
GP0[6]/ MCA[1]_AMUTEIN/ **GPMC_A[23]**	G5	O	PULL: IPD / IPD DRIVE: Z / Z DVDD_3P3	GP0, MCA[1] PINCTRL297	GPMC Address 23
$\overline{\text{SPI_SCS[1]}}$/ **GPMC_A[23]**	P2	O	PULL: DIS / IPU DRIVE: Z / Z DVDD_3P3	SPI PINCTRL168	
$\overline{\text{UART0_DCD}}$/ GPMC_A[18]/ **GPMC_A[23]**/ GP1[18]	N5	O	PULL: IPU / IPU DRIVE: Z / Z DVDD_3P3	UART0, GPMC, GP1 PINCTRL179	
GPMC_A[23]/ GP1[14]	J4	O	PULL: IPD / DIS DRIVE: L / H DVDD_3P3	GP1 PINCTRL194	

Copyright © 2010–2015, Texas Instruments Incorporated

Table 4-6. GPMC Terminal Functions (continued)

SIGNAL NAME	SIGNAL NO.	TYPE(1)	OTHER(2) (3)	MUXED	DESCRIPTION
SPI_SCS[2]/ **GPMC_A[22]**	P3	O	PULL: DIS / IPU DRIVE: Z / Z DVDD_3P3	SPI PINCTRL169	GPMC Address 22
GPMC_A[22]/ GP1[10]	K2	O	PULL: IPU / DIS DRIVE: H / L DVDD_3P3	GP1 PINCTRL190	
UART0_RIN/ GPMC_A[17]/ **GPMC_A[22]**/ GP1[19]	N3	O	PULL: IPU / IPU DRIVE: Z / Z DVDD_3P3	UART0, GPMC, GP1 PINCTRL180	
SPI_SCS[3]/ **GPMC_A[21]**/ GP1[22]	P1	O	PULL: DIS / IPU DRIVE: Z / Z DVDD_3P3	SPI, GP1 PINCTRL170	GPMC Address 21
SD_CMD/ **GPMC_A[21]**/ GP1[2]	U3	O	PULL: IPD / DIS DRIVE: Z / Z DVDD_3P3	SD, GP1 PINCTRL159	
GPMC_A[21]/ GP0[26]	H3	O	PULL: IPD / DIS DRIVE: L / H DVDD_3P3	GP0 PINCTRL201	
SD_DAT[0]/ **GPMC_A[20]**/ GP1[3]	U1	O	PULL: IPD / IPD DRIVE: Z / Z DVDD_3P3	SD, GP1 PINCTRL160	GPMC Address 20
UART0_DTR/ **GPMC_A[20]**/ GPMC_A[12]/ GP1[16]	N6	O	PULL: IPU / DIS DRIVE: H / H DVDD_3P3	UART0, GPMC, GP1 PINCTRL177	
UART1_RXD/ GPMC_A[26]/ **GPMC_A[20]**	N1	O	PULL: IPD / IPD DRIVE: Z / Z DVDD_3P3	UART12, GPMC PINCTRL181	
UART0_DSR/ **GPMC_A[19]**/ GPMC_A[24]/ GP1[17]	N4	O	PULL: IPU / IPU DRIVE: Z / Z DVDD_3P3	UART0, GPMC, GP1 PINCTRL178	GPMC Address 19
SD_DAT[1]_SDIRQ/ **GPMC_A[19]**/ GP1[4]	T1	O	PULL: IPD / IPD DRIVE: Z / Z DVDD_3P3	SD, GP1 PINCTRL161	
UART1_TXD/ GPMC_A[25]/ **GPMC_A[19]**	N2	O	PULL: IPD / DIS DRIVE: L / H DVDD_3P3	UART1, GPMC PINCTRL182	
SD_DAT[2]_SDRW/ **GPMC_A[18]**/ GP1[5]	T2	O	PULL: IPD / IPD DRIVE: Z / Z DVDD_3P3	SD, GP1 PINCTRL162	GPMC Address 18
UART0_DCD/ **GPMC_A[18]**/ GPMC_A[23]/ GP1[18]	N5	O	PULL: IPU / IPU DRIVE: Z / Z DVDD_3P3	UART0, GPMC, GP1 PINCTRL179	
UART1_RTS/ GPMC_A[14]/ **GPMC_A[18]**/ GP1[25]	M2	O	PULL: IPU / DIS DRIVE: H / H DVDD_3P3	UART1, GPMC, GP1 PINCTRL183	

Copyright © 2010–2015, Texas Instruments Incorporated

Table 4-6. GPMC Terminal Functions (continued)

SIGNAL NAME	SIGNAL NO.	TYPE(1)	OTHER(2) (3)	MUXED	DESCRIPTION
SD_DAT[3]/ **GPMC_A[17]**/ GP1[6]	T13	O	PULL: IPD / IPD DRIVE: Z / Z DVDD_3P3	SD, GP1 PINCTRL163	GPMC Address 17
UART0_RIN/ **GPMC_A[17]**/ GPMC_A[22]/ GP1[19]	N3	O	PULL: IPU / IPU DRIVE: Z / Z DVDD_3P3	UART0, GPMC, GP1 PINCTRL180	
$\overline{\text{UART1_CTS}}$/ GPMC_A[13]/ **GPMC_A[17]**/ GP1[26]	L3	O	PULL: IPU / IPU DRIVE: Z / Z DVDD_3P3	UART1, GPMC, GP1 PINCTRL184	
SD_SDCD/ **GPMC_A[16]**/ GP1[7]	R13	O	PULL: IPD / IPD DRIVE: Z / Z DVDD_3P3	SD, GP1 PINCTRL164	GPMC Address 16
$\overline{\text{UART2_CTS}}$/ **GPMC_A[16]**/ GPMC_A[25]/ GP1[24]	K7	O	PULL: IPU / IPU DRIVE: Z / Z DVDD_3P3	UART2, GPMC, GP1 PINCTRL188	
GPMC_A[16]/ GP0[21]	J2	O	PULL: DIS / IPD DRIVE: Z / Z DVDD_3P3	GPMC, GP0 PINCTRL196	
SD_SDWP/ **GPMC_A[15]**/ GP1[8]	R5	O	PULL: IPD / IPD DRIVE: Z / Z DVDD_3P3	SD, GP1 PINCTRL165	GPMC Address 15
$\overline{\text{UART2_RTS}}$/ **GPMC_A[15]**/ GPMC_A[26]/ GP1[23]	L9	O	PULL: IPU / DIS DRIVE: H / H DVDD_3P3	UART2, GPMC, GP1 PINCTRL187	
GPMC_A[15]/ GP0[22]	J1	O	PULL: IPU / DIS DRIVE: H / L DVDD_3P3	GP0 PINCTRL197	
SD_POW/ **GPMC_A[14]**/ GP1[0]	U4	O	PULL: IPD / DIS DRIVE: L / L DVDD_3P3	SD, GPMC, GP1 PINCTRL157	GPMC Address 14
$\overline{\text{UART1_RTS}}$/ **GPMC_A[14]**/ GPMC_A[18]/ GP1[25]	M2	O	PULL: IPU / DIS DRIVE: H / H DVDD_3P3	UART1, GPMC, GP1 PINCTRL183	
GPMC_A[14]/ GP0[23]	H5	O	PULL: IPD / DIS DRIVE: L / L DVDD_3P3	GP0 PINCTRL198	
SD_CLK/ **GPMC_A[13]** / GP1[1]	U2	O	PULL: IPD / DIS DRIVE: L / L DVDD_3P3	SD, GP1 PINCTRL158	GPMC Address 13
$\overline{\text{UART1_CTS}}$/ **GPMC_A[13]**/ GPMC_A[17]/ GP1[26]	L3	O	PULL: IPU / IPU DRIVE: Z / Z DVDD_3P3	UART1, GPMC, GP1 PINCTRL184	
GPMC_A[13]/ GP0[24]	H6	O	PULL: IPU / IPD DRIVE: H / L DVDD_3P3	GP0 PINCTRL199	

Copyright © 2010–2015, Texas Instruments Incorporated

Table 4-6. GPMC Terminal Functions (continued)

SIGNAL NAME	SIGNAL NO.	TYPE(1)	OTHER(2) (3)	MUXED	DESCRIPTION
UART0_DTR/ GPMC_A[20]/ **GPMC_A[12]**/ GP1[16]	N6	O	PULL: IPU / DIS DRIVE: H / H DVDD_3P3	UART0, GPMC, GP1 PINCTRL177	GPMC Address 12
GPMC_A[12]/ GP0[27]	H2	O	PULL: IPD / DIS DRIVE: L / H DVDD_3P3	GP0 PINCTRL202	
TIM7_OUT/ **GPMC_A[12]**/ GP0[31]	G1	O	PULL: IPD / IPD DRIVE: L / L DVDD_3P3	TIM7, GP0 PINCTRL206	
GPMC_CS[5]/ **GPMC_A[12]**	AG1	O	PULL: IPU / IPU DRIVE: H / H DVDD_3P3	GPMC PINCTRL212	
GPMC_A[11]/ GP0[19]	AC2	O	PULL: IPD / DIS DRIVE: Z / Z DVDD_3P3	GP0 PINCTRL232	GPMC Address 11
GPMC_A[10]/ GP0[18]	AD1	O	PULL: IPD / DIS DRIVE: Z / Z DVDD_3P3	GP0 PINCTRL231	GPMC Address 10
GPMC_A[9]/ GP0[17]/ CS0WAIT	AD2	O	PULL: IPU / DIS DRIVE: Z / Z DVDD_3P3	GP0, BOOT PINCTRL230	GPMC Address 9
GPMC_A[8]/ GP0[16]/ CS0BW	AD4	O	PULL: IPU / DIS DRIVE: Z / Z DVDD_3P3	GP0, BOOT PINCTRL229	GPMC Address 8
GPMC_A[7]/ GP0[15]/ CS0MUX[1]	AD3	O	PULL: IPU / DIS DRIVE: Z / Z DVDD_3P3	GP0, BOOT PINCTRL228	GPMC Address 7
GPMC_A[6]/ GP0[14]/ CS0MUX[0]	AD8	O	PULL: IPU / DIS DRIVE: Z / Z DVDD_3P3	GP0, BOOT PINCTRL227	GPMC Address 6
GPMC_A[5]/ GP0[13]/ BTMODE[4]	AE2	O	PULL: IPU / DIS DRIVE: Z / Z DVDD_3P3	GP0, BOOT PINCTRL226	GPMC Address 5
GPMC_A[4]/ GP0[12]/ BTMODE[3]	AE1	O	PULL: IPU / DIS DRIVE: Z / Z DVDD_3P3	GP0, BOOT PINCTRL225	GPMC Address 4
GPMC_A[3]/ GP0[11]/ BTMODE[2]	AE3	O	PULL: IPU / DIS DRIVE: Z / Z DVDD_3P3	GP0, BOOT PINCTRL224	GPMC Address 3
GPMC_A[2]/ GP0[10]/ BTMODE[1]	AE4	O	PULL: IPU / DIS DRIVE: Z / Z DVDD_3P3	GP0, BOOT PINCTRL223	GPMC Address 2
GPMC_A[1]/ GP0[9]/ BTMODE[0]	AE5	O	PULL: IPU / DIS DRIVE: Z / Z DVDD_3P3	GP0, BOOT PINCTRL222	GPMC Address 1
GPMC_A[0]/ GP0[8]	AE6	O	PULL: IPD / DIS DRIVE: Z / Z DVDD_3P3	GP0 PINCTRL221	GPMC Address 0

Copyright © 2010–2015, Texas Instruments Incorporated

Table 4-6. GPMC Terminal Functions (continued)

SIGNAL NAME	SIGNAL NO.	TYPE(1)	OTHER(2) (3)	MUXED	DESCRIPTION
GPMC_D[15]	V2	IO	PULL: IPD / IPD DRIVE: Z / Z DVDD_3P3	- PINCTRL249	GPMC Data IOs. Only D[7:0] are used for 8-bit interfaces
GPMC_D[14]	V3	IO	PULL: IPD / IPD DRIVE: Z / Z DVDD_3P3	- PINCTRL248	
GPMC_D[13]	V10	IO	PULL: IPD / IPD DRIVE: Z / Z DVDD_3P3	- PINCTRL247	
GPMC_D[12]	W2	IO	PULL: IPD / IPD DRIVE: Z / Z DVDD_3P3	- PINCTRL246	
GPMC_D[11]	W1	IO	PULL: IPD / IPD DRIVE: Z / Z DVDD_3P3	- PINCTRL245	
GPMC_D[10]	W3	IO	PULL: IPD / IPD DRIVE: Z / Z DVDD_3P3	- PINCTRL244	
GPMC_D[9]	Y1	IO	PULL: IPD / IPD DRIVE: Z / Z DVDD_3P3	- PINCTRL243	
GPMC_D[8]	W4	IO	PULL: IPD / IPD DRIVE: Z / Z DVDD_3P3	- PINCTRL242	
GPMC_D[7]	Y2	IO	PULL: IPD / IPD DRIVE: Z / Z DVDD_3P3	- PINCTRL241	
GPMC_D[6]	Y10	IO	PULL: IPD / IPD DRIVE: Z / Z DVDD_3P3	- PINCTRL240	
GPMC_D[5]	AA2	IO	PULL: IPD / IPD DRIVE: Z / Z DVDD_3P3	- PINCTRL239	
GPMC_D[4]	Y3	IO	PULL: IPD / IPD DRIVE: Z / Z DVDD_3P3	- PINCTRL238	
GPMC_D[3]	AA3	IO	PULL: IPD / IPD DRIVE: Z / Z DVDD_3P3	- PINCTRL237	
GPMC_D[2]	AB2	IO	PULL: IPD / IPD DRIVE: Z / Z DVDD_3P3	- PINCTRL236	
GPMC_D[1]	AA4	IO	PULL: IPD / IPD DRIVE: Z / Z DVDD_3P3	- PINCTRL235	
GPMC_D[0]	AC1	IO	PULL: IPD / IPD DRIVE: Z / Z DVDD_3P3	- PINCTRL234	

Copyright © 2010–2015, Texas Instruments Incorporated

4.2.6 High-Definition Multimedia Interface (HDMI) Signals

Table 4-7. HDMI Terminal Functions

SIGNAL NAME	SIGNAL NO.	TYPE(1)	OTHER(2) (3)	MUXED	DESCRIPTION
HDMI_TMDSCLKP	AT24	O	- VDDA_HDMI	-	HDMI Clock Output. When the HDMI PHY is powered down, these pins should be left unconnected.
HDMI_TMDSCLKN	AU24	O	- VDDA_HDMI	-	
HDMI_TMDSDN2	AU27	O	- VDDA_HDMI	-	HDMI Data 2 output. When the HDMI PHY is powered down, these pins should be left unconnected.
HDMI_TMDSDP2	AT27	O	- VDDA_HDMI	-	
HDMI_TMDSDN1	AU26	O	- VDDA_HDMI	-	HDMI Data 1 output. When the HDMI PHY is powered down, these pins should be left unconnected.
HDMI_TMDSDP1	AT26	O	- VDDA_HDMI	-	
HDMI_TMDSDN0	AU25	O	- VDDA_HDMI	-	HDMI Data 0 output. When the HDMI PHY is powered down, these pins should be left unconnected.
HDMI_TMDSDP0	AT25	O	- VDDA_HDMI	-	
HDMI_SCL	AL25	O	PULL: DIS / DIS DRIVE: Z / Z DVDD_3P3	- PINCTRL301	HDMI I2C Serial Clock Output
HDMI_SDA	AK25	IO	PULL: DIS / DIS DRIVE: Z / Z DVDD_3P3	- PINCTRL302	HDMI I2C Serial Data IO
HDMI_CEC	AP25	IO	PULL: IPU / IPU DRIVE: H / H DVDD_3P3	- PINCTRL303	HDMI Consumer Electronics Control IO
HDMI_HPDET	AE24	I	PULL: IPD / IPD DRIVE: Z / Z DVDD_3P3	- PINCTRL304	HDMI Hot Plug Detect Input. Signals the connection / removal of an HDMI cable at the connector.
HDMI_EXTSWING	AN25	A	-	-	HDMI Voltage Reference. When HDMI is used, this pin must be connected via an external 6.8K-Ω (±1% tolerance) resistor to V_{SS}. When the HDMI PHY is powered down, this pin should be left unconnected.

(1) I = Input, O = Output, Z = High impedance, S = Supply voltage, GND = Ground, A = Analog signal.
(2) PULL: A / B, where:
A is the state of the internal pull resistor during $\overline{POR}$ reset
B is the state of the internal pull resistor after $\overline{POR}$ and Warm reset are de-asserted **and** during Warm reset
IPD = Internal Pulldown Enabled, IPU = Internal Pullup Enabled, DIS = Internal Pull Disabled
DRIVE: A / B, where;
A is the driving state of the pin during $\overline{POR}$ reset
B is the driving state of the pin after $\overline{POR}$ and Warm reset are de-asserted **and** during Warm reset
H = Driving High, L = Driving Low, Z = 3-State
For more detailed information on pullup and pulldown resistors and situations where external pullup and pulldown resistors are required, see Section 6.3.1, *Pullup and Pulldown Resistors*.
(3) Specifies the operating IO supply voltage for each signal.

4.2.7 Inter-Integrated Circuit (I2C) Signals

Table 4-8. I2C Terminal Functions

SIGNAL NAME	SIGNAL NO.	TYPE(1)	OTHER(2) (3)	MUXED	DESCRIPTION
I2C0					
I2C[0]_SCL	N32	IO	PULL: DIS / DIS DRIVE: Z / Z DVDD_3P3	- PINCTRL287	I2C0 Clock IO
I2C[0]_SDA	N33	IO	PULL: DIS / DIS DRIVE: Z / Z DVDD_3P3	- PINCTRL288	I2C0 Data IO
I2C1					
I2C[1]_SCL	N34	IO	PULL: DIS / DIS DRIVE: Z / Z DVDD_3P3	- PINCTRL289	I2C1 Clock IO
I2C[1]_SDA	N35	IO	PULL: DIS / DIS DRIVE: Z / Z DVDD_3P3	- PINCTRL290	I2C1 Data IO

(1) I = Input, O = Output, Z = High impedance, S = Supply voltage, GND = Ground, A = Analog signal.
(2) PULL: A / B, where:
A is the state of the internal pull resistor during $\overline{POR}$ reset
B is the state of the internal pull resistor after $\overline{POR}$ and Warm reset are de-asserted **and** during Warm reset
IPD = Internal Pulldown Enabled, IPU = Internal Pullup Enabled, DIS = Internal Pull Disabled
DRIVE: A / B, where;
A is the driving state of the pin during $\overline{POR}$ reset
B is the driving state of the pin after $\overline{POR}$ and Warm reset are de-asserted **and** during Warm reset
H = Driving High, L = Driving Low, Z = 3-State
For more detailed information on pullup and pulldown resistors and situations where external pullup and pulldown resistors are required, see Section 6.3.1, *Pullup and Pulldown Resistors*.
(3) Specifies the operating IO supply voltage for each signal.

Copyright © 2010–2015, Texas Instruments Incorporated

4.2.8 Multichannel Audio Serial Port Signals

Table 4-9. McASP0 Terminal Functions

SIGNAL NAME	SIGNAL NO.	TYPE(1)	OTHER(2) (3)	MUXED	DESCRIPTION
MCA[0]_ACLKR	AK28	IO	PULL: IPD / IPD DRIVE: Z / Z DVDD_3P3	- PINCTRL126	McASP0 Receive Bit Clock IO
MCA[0]_AHCLKR	AJ27	IO	PULL: IPD / IPD DRIVE: Z / Z DVDD_3P3	- PINCTRL127	McASP0 Receive High-Frequency Master Clock IO
MCA[0]_AFSR	AG29	IO	PULL: IPD / IPD DRIVE: Z / Z DVDD_3P3	- PINCTRL128	McASP0 Receive Frame Sync IO
GP0[7]/ **MCA[0]_AMUTEIN**	H35	IO	PULL: IPD / IPD DRIVE: Z / Z DVDD_3P3	GP0 PINCTRL298	McASP0 Mute Input
MCA[0]_ACLKX	AH30	IO	PULL: IPD / IPD DRIVE: Z / Z DVDD_3P3	- PINCTRL129	McASP0 Transmit Bit Clock IO
MCA[0]_AHCLKX	AH31	IO	PULL: IPD / IPD DRIVE: Z / Z DVDD_3P3	- PINCTRL130	McASP0 Transmit High-Frequency Master Clock IO
MCA[0]_AFSX	AJ31	IO	PULL: IPD / IPD DRIVE: Z / Z DVDD_3P3	- PINCTRL131	McASP0 Transmit Frame Sync IO
MCA[0]_AMUTE	AJ35	O	PULL: IPD / IPD DRIVE: Z / Z DVDD_3P3	- PINCTRL132	McASP0 Mute Output
MCA[0]_AXR[5]/ MCB_DR	AJ37	IO	PULL: IPD / IPD DRIVE: Z / Z DVDD_3P3	MCB PINCTRL138	McASP0 Transmit/Receive Data IOs
MCA[0]_AXR[4]/ MCB_DX	AJ36	IO	PULL: IPD / IPD DRIVE: Z / Z DVDD_3P3	MCB PINCTRL137	
MCA[0]_AXR[3]/ MCB_FSR	AJ34	IO	PULL: IPD / IPD DRIVE: Z / Z DVDD_3P3	MCB PINCTRL136	
MCA[0]_AXR[2]/ MCB_FSX	AJ33	IO	PULL: IPD / IPD DRIVE: Z / Z DVDD_3P3	MCB PINCTRL135	
MCA[0]_AXR[1]	AJ32	IO	PULL: IPD / IPD DRIVE: Z / Z DVDD_3P3	- PINCTRL134	
MCA[0]_AXR[0]	AK37	IO	PULL: IPD / IPD DRIVE: Z / Z DVDD_3P3	- PINCTRL133	

(1) I = Input, O = Output, Z = High impedance, S = Supply voltage, GND = Ground, A = Analog signal.
(2) PULL: A / B, where:
A is the state of the internal pull resistor during $\overline{\text{POR}}$ reset
B is the state of the internal pull resistor after $\overline{\text{POR}}$ and Warm reset are de-asserted **and** during Warm reset
IPD = Internal Pulldown Enabled, IPU = Internal Pullup Enabled, DIS = Internal Pull Disabled
DRIVE: A / B, where;
A is the driving state of the pin during $\overline{\text{POR}}$ reset
B is the driving state of the pin after $\overline{\text{POR}}$ and Warm reset are de-asserted **and** during Warm reset
H = Driving High, L = Driving Low, Z = 3-State
For more detailed information on pullup and pulldown resistors and situations where external pullup and pulldown resistors are required, see Section 6.3.1, *Pullup and Pulldown Resistors*.
(3) Specifies the operating IO supply voltage for each signal.

Table 4-10. McASP1 Terminal Functions

SIGNAL NAME	SIGNAL NO.	TYPE(1)	OTHER(2) (3)	MUXED	DESCRIPTION
MCA[1]_ACLKR	AK36	IO	PULL: IPD / IPD DRIVE: Z / Z DVDD_3P3	- PINCTRL139	McASP1 Receive Bit Clock IO
MCA[1]_AHCLKR	AL37	IO	PULL: IPD / IPD DRIVE: Z / Z DVDD_3P3	- PINCTRL140	McASP1 Receive High-Frequency Master Clock IO
MCA[1]_AFSR	AK35	IO	PULL: IPD / IPD DRIVE: Z / Z DVDD_3P3	- PINCTRL141	McASP1 Receive Frame Sync IO
GP0[6]/ **MCA[1]_AMUTEIN**/ GPMC_A[23]	G5	I	PULL: IPD / IPD DRIVE: Z / Z DVDD_3P3	GP0, GPMC PINCTRL297	McASP1 Mute Input
MCA[1]_ACLKX	AL36	IO	PULL: IPD / IPD DRIVE: Z / Z DVDD_3P3	- PINCTRL142	McASP1 Transmit Bit Clock IO
MCA[1]_AHCLKX	AM37	IO	PULL: IPD / IPD DRIVE: Z / Z DVDD_3P3	- PINCTRL143	McASP1 Transmit High-Frequency Master Clock IO
MCA[1]_AFSX	AK34	IO	PULL: IPD / IPD DRIVE: Z / Z DVDD_3P3	- PINCTRL144	McASP1 Transmit Frame Sync IO
MCA[1]_AMUTE	AK33	O	PULL: IPD / IPD DRIVE: Z / Z DVDD_3P3	- PINCTRL145	McASP1 Mute Output
MCA[1]_AXR[1]	AK32	IO	PULL: IPD / IPD DRIVE: Z / Z DVDD_3P3	- PINCTRL147	McASP1 Transmit/Receive Data IOs
MCA[1]_AXR[0]	AL33	IO	PULL: IPD / IPD DRIVE: Z / Z DVDD_3P3	- PINCTRL146	

(1) I = Input, O = Output, Z = High impedance, S = Supply voltage, GND = Ground, A = Analog signal.
(2) PULL: A / B, where:
A is the state of the internal pull resistor during $\overline{\text{POR}}$ reset
B is the state of the internal pull resistor after $\overline{\text{POR}}$ and Warm reset are de-asserted **and** during Warm reset
IPD = Internal Pulldown Enabled, IPU = Internal Pullup Enabled, DIS = Internal Pull Disabled
DRIVE: A / B, where;
A is the driving state of the pin during $\overline{\text{POR}}$ reset
B is the driving state of the pin after $\overline{\text{POR}}$ and Warm reset are de-asserted **and** during Warm reset
H = Driving High, L = Driving Low, Z = 3-State
For more detailed information on pullup and pulldown resistors and situations where external pullup and pulldown resistors are required, see Section 6.3.1, *Pullup and Pulldown Resistors*.
(3) Specifies the operating IO supply voltage for each signal.

Copyright © 2010–2015, Texas Instruments Incorporated

Table 4-11. McASP2 Terminal Functions

SIGNAL NAME	SIGNAL NO.	TYPE(1)	OTHER(2) (3)	MUXED	DESCRIPTION
MCA[2]_ACLKR/ MCB_CLKR/ MCB_DR	AL34	IO	PULL: IPD / IPD DRIVE: Z / Z DVDD_3P3	MCB PINCTRL148	McASP2 Receive Bit Clock IO
MCA[2]_AHCLKR/ MCB_CLKS	AM34	IO	PULL: IPD / IPD DRIVE: Z / Z DVDD_3P3	MCB PINCTRL149	McASP2 Receive High-Frequency Master Clock IO
MCA[2]_AFSR/ MCB_CLKX/ MCB_FSR	AM35	IO	PULL: IPD / IPD DRIVE: Z / Z DVDD_3P3	MCB PINCTRL150	McASP2 Receive Frame Sync IO
GP0[5]/ **MCA[2]_AMUTEIN**/ GPMC_A[24]	G2	I	PULL: IPD / IPD DRIVE: Z / Z DVDD_3P3	GP0, GPMC PINCTRL296	McASP2 Mute Input
MCA[2]_ACLKX/ MCB_CLKX	AM36	IO	PULL: IPD / IPD DRIVE: Z / Z DVDD_3P3	MCB PINCTRL151	McASP2 Transmit Bit Clock IO
MCA[2]_AHCLKX/ MCB_CLKR	AN36	IO	PULL: IPD / IPD DRIVE: Z / Z DVDD_3P3	MCB PINCTRL152	McASP2 Transmit High-Frequency Master Clock IO
MCA[2]_AFSX/ MCB_CLKS/ MCB_FSX	AN35	IO	PULL: IPD / IPD DRIVE: Z / Z DVDD_3P3	MCB PINCTRL153	McASP2 Transmit Frame Sync IO
MCA[2]_AMUTE	AP36	O	PULL: IPD / IPD DRIVE: Z / Z DVDD_3P3	- PINCTRL154	McASP2 Mute Output
MCA[2]_AXR[1]/ MCB_DX	AR37	IO	PULL: IPD / IPD DRIVE: Z / Z DVDD_3P3	MCB PINCTRL156	McASP2 Transmit/Receive Data IOs
MCA[2]_AXR[0]	AR36	IO	PULL: IPD / IPD DRIVE: Z / Z DVDD_3P3	- PINCTRL155	

(1) I = Input, O = Output, Z = High impedance, S = Supply voltage, GND = Ground, A = Analog signal.
(2) PULL: A / B, where:
A is the state of the internal pull resistor during $\overline{POR}$ reset
B is the state of the internal pull resistor after $\overline{POR}$ and Warm reset are de-asserted **and** during Warm reset
IPD = Internal Pulldown Enabled, IPU = Internal Pullup Enabled, DIS = Internal Pull Disabled
DRIVE: A / B, where;
A is the driving state of the pin during $\overline{POR}$ reset
B is the driving state of the pin after $\overline{POR}$ and Warm reset are de-asserted **and** during Warm reset
H = Driving High, L = Driving Low, Z = 3-State
For more detailed information on pullup and pulldown resistors and situations where external pullup and pulldown resistors are required, see Section 6.3.1, *Pullup and Pulldown Resistors*.
(3) Specifies the operating IO supply voltage for each signal.

4.2.9 Multichannel Buffered Serial Port Signals

Table 4-12. McBSP Terminal Functions

SIGNAL NAME	SIGNAL NO.	TYPE(1)	OTHER(2) (3)	MUXED	DESCRIPTION
MCA[2]_ACLKR/ **MCB_CLKR**/ MCB_DR	AL34	IO	PULL: IPD / IPD DRIVE: Z / Z DVDD_3P3	MCA[2], MCB PINCTRL148	McBSP Receive Clock IO
MCA[2]_AHCLKX/ **MCB_CLKR**	AN36	IO	PULL: IPD / IPD DRIVE: Z / Z DVDD_3P3	MCA[2] PINCTRL152	
MCA[0]_AXR[3]/ **MCB_FSR**	AJ34	IO	PULL: IPD / IPD DRIVE: Z / Z DVDD_3P3	MCA[0] PINCTRL136	McBSP Receive Frame Sync IO
MCA[2]_AFSR/ MCB_CLKX/ **MCB_FSR**	AM35	IO	PULL: IPD / IPD DRIVE: Z / Z DVDD_3P3	MCA[2], MCB PINCTRL150	
MCA[0]_AXR[5]/ **MCB_DR**	AJ37	I	PULL: IPD / IPD DRIVE: Z / Z DVDD_3P3	MCA[0] PINCTRL138	McBSP Receive Data Input
MCA[2]_ACLKR/ MCB_CLKR/ **MCB_DR**	AL34	I	PULL: IPD / IPD DRIVE: Z / Z DVDD_3P3	MCA[2], MCB PINCTRL148	
MCA[2]_AFSR/ **MCB_CLKX**/ MCB_FSR	AM35	IO	PULL: IPD / IPD DRIVE: Z / Z DVDD_3P3	MCA[2], MCB PINCTRL150	McBSP Transmit Clock IO
MCA[2]_ACLKX/ **MCB_CLKX**	AM36	IO	PULL: IPD / IPD DRIVE: Z / Z DVDD_3P3	MCA[2] PINCTRL151	
MCA[0]_AXR[2]/ **MCB_FSX**	AJ33	IO	PULL: IPD / IPD DRIVE: Z / Z DVDD_3P3	MCA[0] PINCTRL135	McBSP Transmit Frame Sync IO
MCA[2]_AFSX/ MCB_CLKS/ **MCB_FSX**	AN35	IO	PULL: IPD / IPD DRIVE: Z / Z DVDD_3P3	MCA[2], MCB PINCTRL153	
MCA[0]_AXR[4]/ **MCB_DX**	AJ36	O	PULL: IPD / IPD DRIVE: Z / Z DVDD_3P3	MCA[0] PINCTRL137	McBSP Transmit Data Output
MCA[2]_AXR[1]/ **MCB_DX**	AR37	O	PULL: IPD / IPD DRIVE: Z / Z DVDD_3P3	MCA[2] PINCTRL156	
MCA[2]_AHCLKR/ **MCB_CLKS**	AM34	I	PULL: IPD / IPD DRIVE: Z / Z DVDD_3P3	MCA[2] PINCTRL149	McBSP Source Clock Input
MCA[2]_AFSX/ **MCB_CLKS**/ MCB_FSX	AN35	I	PULL: IPD / IPD DRIVE: Z / Z DVDD_3P3	MCA[2], MCB PINCTRL153	

(1) I = Input, O = Output, Z = High impedance, S = Supply voltage, GND = Ground, A = Analog signal.
(2) PULL: A / B, where:
A is the state of the internal pull resistor during $\overline{\text{POR}}$ reset
B is the state of the internal pull resistor after $\overline{\text{POR}}$ and Warm reset are de-asserted **and** during Warm reset
IPD = Internal Pulldown Enabled, IPU = Internal Pullup Enabled, DIS = Internal Pull Disabled
DRIVE: A / B, where;
A is the driving state of the pin during $\overline{\text{POR}}$ reset
B is the driving state of the pin after $\overline{\text{POR}}$ and Warm reset are de-asserted **and** during Warm reset
H = Driving High, L = Driving Low, Z = 3-State
For more detailed information on pullup and pulldown resistors and situations where external pullup and pulldown resistors are required, see Section 6.3.1, *Pullup and Pulldown Resistors*.
(3) Specifies the operating IO supply voltage for each signal.

Copyright © 2010–2015, Texas Instruments Incorporated

4.2.10 Oscillator/Phase-Locked Loop (PLL) Signals

Table 4-13. Oscillator/PLL and Clock Generator Terminal Functions

SIGNAL NAME	SIGNAL NO.	TYPE(1)	OTHER(2) (3)	MUXED	DESCRIPTION
CLOCK GENERATOR					
CLKOUT	F1	O	PULL: IPU / DIS DRIVE: L / L DVDD_3P3	- PINCTRL320	Device Clock output. Can be used as a system clock for other devices
OSCILLATOR/PLL					
DEV_MXI/ DEV_CLKIN	A19	I	DIS DEV_DVDD18	-	Device Crystal input. Crystal connection to internal oscillator for system clock. Functions as CLKINDEV clock input when an ***external*** oscillator is used.
DEV_MXO	C19	O	DIS DEV_DVDD18	-	Device Crystal output. Crystal connection to internal oscillator for system clock. When device oscillator is BYPASSED, leave this pin unconnected.
DEVOSC_DVDD18	E19	S	-	-	1.8 V Power Supply for Device (DEV) Oscillator. If the internal oscillator is bypassed, DEVOSC_DVDD18 should still be connected to the 1.8-V power supply.
DEVOSC_VSS	B19	GND	-	-	Supply Ground for DEV Oscillator. If the internal oscillator is bypassed, DEVOSC_VSS should be connected to ground (VSS).
CLKIN32	H37	I	PULL: IPU / IPD DRIVE: Z / Z DVDD_3P3	- PINCTRL321	RTC Clock input. Optional 32.768 kHz clock for RTC reference. If this pin is not used, it should be held low.

(1) I = Input, O = Output, Z = High impedance, S = Supply voltage, GND = Ground, A = Analog signal.
(2) PULL: A / B, where:
A is the state of the internal pull resistor during $\overline{\text{POR}}$ reset
B is the state of the internal pull resistor after $\overline{\text{POR}}$ and Warm reset are de-asserted **and** during Warm reset
IPD = Internal Pulldown Enabled, IPU = Internal Pullup Enabled, DIS = Internal Pull Disabled
DRIVE: A / B, where;
A is the driving state of the pin during $\overline{\text{POR}}$ reset
B is the driving state of the pin after $\overline{\text{POR}}$ and Warm reset are de-asserted **and** during Warm reset
H = Driving High, L = Driving Low, Z = 3-State
For more detailed information on pullup and pulldown resistors and situations where external pullup and pulldown resistors are required, see Section 6.3.1, *Pullup and Pulldown Resistors*.
(3) Specifies the operating IO supply voltage for each signal.

4.2.11 Peripheral Component Interconnect Express (PCIe) Signals

Table 4-14. PCIe Terminal Functions

SIGNAL NAME	SIGNAL NO.	TYPE(1)	OTHER(2)	DESCRIPTION
PCIE_TXP0	AB31	O	VDDR_PCIE	PCIE Transmit Data Lane 0. When the PCIe SERDES are powered down, or if this lane is not used, these pins should be left unconnected.
PCIE_TXN0	AB30	O		
PCIE_RXP0	Y29	I	VDDR_PCIE	PCIE Receive Data Lane 0. When the PCIe SERDES are powered down, or if this lane is not used, these pins should be left unconnected.
PCIE_RXN0	V29	I		
PCIE_TXP1	Y27	O	VDDR_PCIE	PCIE Transmit Data Lane 1. When the PCIe SERDES are powered down, or if this lane is not used, these pins should be left unconnected.
PCIE_TXN1	AB28	O		
PCIE_RXP1	V31	I	VDDR_PCIE	PCIE Receive Data Lane 1. When the PCIe SERDES are powered down, or if this lane is not used, these pins should be left unconnected.
PCIE_RXN1	V30	I		
SERDES_CLKP	AB34	I	VDD_LJCB	PCIE Serdes Reference Clock Inputs. Shared between PCI Express and Serial ATA. When neither PCI Express nor Serial ATA are used, these pins should be left unconnected.
SERDES_CLKN	AB33	I	VDD_LJCB	

(1) I = Input, O = Output, Z = High impedance, S = Supply voltage, GND = Ground, A = Analog signal.
(2) Specifies the operating IO supply voltage for each signal.

Copyright © 2010–2015, Texas Instruments Incorporated

4.2.12 Reset, Interrupts, and JTAG Interface Signals

Table 4-15. RESET, Interrupts, and JTAG Terminal Functions

SIGNAL NAME	SIGNAL NO.	TYPE(1)	OTHER(2) (3)	MUXED	DESCRIPTION
RESET					
$\overline{\text{RESET}}$	G33	I	PULL: IPD / IPU DRIVE: Z / Z DVDD_3P3	- PINCTRL316	Device Reset input
$\overline{\text{POR}}$	F37	I	IPU DVDD_3P3	-	Power-On Reset input
$\overline{\text{RSTOUT}}$	G37	O	PULL: DIS / DIS DVDD_3P3	- PINCTRL318	Reset output For more detailed information on $\overline{\text{RSTOUT}}$ pin behavior, see Section 8.2.13
INTERRUPTS					
$\overline{\text{NMI}}$	G36	I	PULL: IPD / IPU DRIVE: Z / Z DVDD_3P3	- PINCTRL317	External active low maskable interrupt
GP0[31:3]	see Table 4-5	IO	see **NOTE**	-	Interrupt-capable general-purpose IOs **NOTE:** All pins are multiplexed with other pin functions. For muxing and internal pullup, pulldown, or disable details, see Table 4-5, *GPIO Terminal Functions*.
GP1[31:0]	see Table 4-5	IO	see **NOTE**	-	Interrupt-capable general-purpose IOs **NOTE:** All pins are multiplexed with other pin functions. For muxing and internal pullup, pulldown, or disable details, see Table 4-5, *GPIO Terminal Functions*.
JTAG					
TCLK	J37	I	PULL: IPU / IPU DRIVE: H / H DVDD_3P3	- PINCTRL305	JTAG test clock input
RTCK	J36	O	PULL: IPD / DIS DRIVE: L / H DVDD_3P3	- PINCTRL306	JTAG return clock output
TDI	J34	I	PULL: IPU / IPU DRIVE: H / H DVDD_3P3	- PINCTRL307	JTAG test data input
TDO	N30	O	PULL: IPD / DIS DRIVE: Z / Z DVDD_3P3	- PINCTRL308	JTAG test port data output
TMS	N31	I	PULL: IPU / IPU DRIVE: Z / Z DVDD_3P3	- PINCTRL309	JTAG test port mode select input. For proper operation, ***do not*** oppose the IPU on this pin.
$\overline{\text{TRST}}$	K36	I	PULL: IPD / IPD DRIVE: L / L DVDD_3P3	- PINCTRL310	JTAG test port reset input
EMU4	M37	IO	PULL: IPU / IPU DRIVE: Z / Z DVDD_3P3	- PINCTRL315	Emulator pin 4

(1) I = Input, O = Output, Z = High impedance, S = Supply voltage, GND = Ground, A = Analog signal.
(2) PULL: A / B, where:
A is the state of the internal pull resistor during $\overline{\text{POR}}$ reset
B is the state of the internal pull resistor after $\overline{\text{POR}}$ and Warm reset are de-asserted **and** during Warm reset
IPD = Internal Pulldown Enabled, IPU = Internal Pullup Enabled, DIS = Internal Pull Disabled
DRIVE: A / B, where;
A is the driving state of the pin during $\overline{\text{POR}}$ reset
B is the driving state of the pin after $\overline{\text{POR}}$ and Warm reset are de-asserted **and** during Warm reset
H = Driving High, L = Driving Low, Z = 3-State
For more detailed information on pullup and pulldown resistors and situations where external pullup and pulldown resistors are required, see Section 6.3.1, *Pullup and Pulldown Resistors*.
(3) Specifies the operating IO supply voltage for each signal.

Copyright © 2010–2015, Texas Instruments Incorporated

Table 4-15. RESET, Interrupts, and JTAG Terminal Functions (continued)

SIGNAL NAME	SIGNAL NO.	TYPE(1)	OTHER(2) (3)	MUXED	DESCRIPTION
EMU3	M36	IO	PULL: IPU / IPU DRIVE: Z / Z DVDD_3P3	- PINCTRL314	Emulator pin 3
EMU2	L37	IO	PULL: IPU / IPU DRIVE: Z / Z DVDD_3P3	- PINCTRL313	Emulator pin 2
EMU1	L36	IO	PULL: IPU / IPU DRIVE: Z / Z DVDD_3P3	- PINCTRL312	Emulator pin 1
EMU0	J35	IO	PULL: IPU / IPU DRIVE: Z / Z DVDD_3P3	- PINCTRL311	Emulator pin 0

Copyright © 2010–2015, Texas Instruments Incorporated

4.2.13 Secure Digital/Secure Digital Input Output (SD/SDIO) Signals

Table 4-16. SD/SDIO Terminal Functions

SIGNAL NAME	SIGNAL NO.	TYPE(1)	OTHER(2) (3)	MUXED	DESCRIPTION
SD_CLK/ GPMC_A[13]/ GP1[1]	U2	O	PULL: IPD / DIS DRIVE: L / L DVDD_3P3	GPMC, GP1 PINCTRL158	SD Clock output
SD_CMD/ GPMC_A[21]/ GP1_[2]	U3	O	PULL: IPD / DIS DRIVE: Z / Z DVDD_3P3	GPMC, GP1 PINCTRL159	SD Command output
SD_DAT[0]/ GPMC_A[20]/ GP1[3]	U1	IO	PULL: IPD / IPD DRIVE: Z / Z DVDD_3P3	GPMC, GP1 PINCTRL160	SD Data0 IO. Functions as data bit 0 for 4-bit SD mode and single data bit for 1-bit SD mode.
SD_DAT[1]_SDIRQ/ GPMC_A[19]/ GP1[4]	T1	IO	PULL: IPD / IPD DRIVE: Z / Z DVDD_3P3	GMPC, GP1 PINCTRL161	SD Data1 IO. Functions as data bit 1 for 4-bit SD mode and as an IRQ input for 1-bit SD mode
SD_DAT[2]_SDRW/ GPMC_A[18]/ GP1[5]	T2	IO	PULL: IPD / IPD DRIVE: Z / Z DVDD_3P3	GPMC, GP1 PINCTRL162	SD Data2 IO. Functions as data bit 2 for 4-bit SD mode and as a Read Wait input for 1-bit SD mode.
SD_DAT[3]/ GPMC_A[17]/ GP1[6]	T13	IO	PULL: IPD / IPD DRIVE: Z / Z DVDD_3P3	GPMC, GP1 PINCTRL163	SD Data3 IO. Functions as data bit 3 for 4-bit SD mode.
SD_POW/ GPMC_A[14]/ GP1[0]	U4	O	PULL: IPD / DIS DRIVE: L / L DVDD_3P3	GPMC, GP1 PINCTRL157	SD Card Power Enable output
SD_SDCD/ GPMC_A[16]/ GP1[7]	R13	I	PULL: IPD / IPD DRIVE: Z / Z DVDD_3P3	GPMC, GP1 PINCTRL164	SD Card Detect input
SD_SDWP/ GPMC_A[15]/ GP1[8]	R5	I	PULL: IPD / IPD DRIVE: Z / Z DVDD_3P3	GMC, GP1 PINCTRL165	SD Card Write Protect input

(1) I = Input, O = Output, Z = High impedance, S = Supply voltage, GND = Ground, A = Analog signal.
(2) PULL: A / B, where:
A is the state of the internal pull resistor during $\overline{\text{POR}}$ reset
B is the state of the internal pull resistor after $\overline{\text{POR}}$ and Warm reset are de-asserted **and** during Warm reset
IPD = Internal Pulldown Enabled, IPU = Internal Pullup Enabled, DIS = Internal Pull Disabled
DRIVE: A / B, where;
A is the driving state of the pin during $\overline{\text{POR}}$ reset
B is the driving state of the pin after $\overline{\text{POR}}$ and Warm reset are de-asserted **and** during Warm reset
H = Driving High, L = Driving Low, Z = 3-State
For more detailed information on pullup and pulldown resistors and situations where external pullup and pulldown resistors are required, see Section 6.3.1, *Pullup and Pulldown Resistors*.
(3) Specifies the operating IO supply voltage for each signal.

4.2.14 Serial ATA Signals

NOTE

Serial ATA pins J32 and J33 have a different naming convention and functionality for silicon revision 1.x devices and silicon revision 2.x devices. These pins are listed separately in Table 4-18.

Table 4-17. Serial ATA Terminal Functions

SIGNAL NAME	SIGNAL NO.	TYPE(1)	OTHER(2) (3)	MUXED	DESCRIPTION
SATA_TXN0	T31	O	- VDDR_SATA	-	Serial ATA Data Transmit for disk 0. When the SATA SERDES are powered down, these pins should be left unconnected.
SATA_TXP0	T32	O	- VDDR_SATA	-	
SATA_TXN1	U33	O	- VDDR_SATA	-	Serial ATA Data Transmit for disk 1. When the SATA SERDES are powered down, these pins should be left unconnected.
SATA_TXP1	V33	O	- VDDR_SATA	-	
SATA_RXN0	V37	I	- VDDR_SATA	-	Serial ATA Data Receive for disk 0. When the SATA SERDES are powered down, these pins should be left unconnected.
SATA_RXP0	V36	I	- VDDR_SATA	-	
SATA_RXN1	V35	I	- VDDR_SATA	-	Serial ATA Data Receive for disk 1. When the SATA SERDES are powered down, these pins should be left unconnected.
SATA_RXP1	W35	I	- VDDR_SATA	-	
SERDES_CLKP	AB34	I	- VDD_LJCB	-	PCIE Serdes Reference Clock Input. Shared between PCI Express and Serial ATA.
SERDES_CLKN	AB33	I	- VDD_LJCB	-	

(1) I = Input, O = Output, Z = High impedance, S = Supply voltage, GND = Ground, A = Analog signal.
(2) PULL: A / B, where:
A is the state of the internal pull resistor during $\overline{POR}$ reset
B is the state of the internal pull resistor after $\overline{POR}$ and Warm reset are de-asserted **and** during Warm reset
IPD = Internal Pulldown Enabled, IPU = Internal Pullup Enabled, DIS = Internal Pull Disabled
DRIVE: A / B, where;
A is the driving state of the pin during $\overline{POR}$ reset
B is the driving state of the pin after $\overline{POR}$ and Warm reset are de-asserted **and** during Warm reset
H = Driving High, L = Driving Low, Z = 3-State
For more detailed information on pullup and pulldown resistors and situations where external pullup and pulldown resistors are required, see Section 6.3.1, *Pullup and Pulldown Resistors*.
(3) Specifies the operating IO supply voltage for each signal.

Table 4-18. Serial ATA [Pins J32, J33] Terminal Functions

SIGNAL NAME	SIGNAL NO.	TYPE(1)	OTHER(2) (3)	MUXED	DESCRIPTION
Silicon Revision 1.x					

(1) I = Input, O = Output, Z = High impedance, S = Supply voltage, GND = Ground, A = Analog signal.
(2) PULL: A / B, where:
A is the state of the internal pull resistor during $\overline{POR}$ reset
B is the state of the internal pull resistor after $\overline{POR}$ and Warm reset are de-asserted **and** during Warm reset
IPD = Internal Pulldown Enabled, IPU = Internal Pullup Enabled, DIS = Internal Pull Disabled
DRIVE: A / B, where;
A is the driving state of the pin during $\overline{POR}$ reset
B is the driving state of the pin after $\overline{POR}$ and Warm reset are de-asserted **and** during Warm reset
H = Driving High, L = Driving Low, Z = 3-State
For more detailed information on pullup and pulldown resistors and situations where external pullup and pulldown resistors are required, see Section 6.3.1, *Pullup and Pulldown Resistors*.
(3) Specifies the operating IO supply voltage for each signal.

Copyright © 2010–2015, Texas Instruments Incorporated

Table 4-18. Serial ATA [Pins J32, J33] Terminal Functions (continued)

SIGNAL NAME	NO.	TYPE(1)	OTHER(2) (3)	MUXED	DESCRIPTION
GP1[30]/ **SATA_ACT0_LED**	J32	O	PULL: IPD / IPD DRIVE: Z / Z DVDD_3P3	GP1 PINCTRL299	Serial ATA disk 0 Activity LED output
GP1[31]/ **SATA_ACT1_LED**	J33	O	PULL: IPD / IPD DRIVE: Z / Z DVDD_3P3	GP1 PINCTRL300	Serial ATA disk 1 Activity LED output
Silicon Revision 2.x					
GP1[30]/ **SATA_ACT1_LED**	J32	O	PULL: IPD / IPD DRIVE: Z / Z DVDD_3P3	GP1 PINCTRL299	Serial ATA disk 1 Activity LED output
GP1[31]/ **SATA_ACT0_LED**	J33	O	PULL: IPD / IPD DRIVE: Z / Z DVDD_3P3	GP1 PINCTRL300	Serial ATA disk 0 Activity LED output

Copyright © 2010–2015, Texas Instruments Incorporated

4.2.15 Serial Peripheral Digital Interconnect Format (SPI) Signals

Table 4-19. SPI Terminal Functions

SIGNAL NAME	SIGNAL NO.	TYPE(1)	OTHER(2) (3)	MUXED	DESCRIPTION
SPI_SCLK	R2	IO	PULL: IPD / IPD DRIVE: Z / Z DVDD_3P3	- PINCTRL166	SPI Clock IO
SPI_SCS[3] / GPMC_A[21]/ GP1[22]	P1	IO	PULL: DIS / IPU DRIVE: Z / Z DVDD_3P3	GPMC, GP1 PINCTRL170	SPI Chip Select IO
SPI_SCS[2] / GPMC_A[22]	P3	IO	PULL: DIS / IPU DRIVE: Z / Z DVDD_3P3	GPMC PINCTRL169	
SPI_SCS[1] / GPMC_A[23]	P2	IO	PULL: DIS / IPU DRIVE: Z / Z DVDD_3P3	GPMC PINCTRL168	
SPI_SCS[0]	R1	IO	PULL: DIS / IPU DRIVE: Z / Z DVDD_3P3	- PINCTRL167	
SPI_D[1]	P13	IO	PULL: IPD / IPD DRIVE: Z / Z DVDD_3P3	- PINCTRL172	SPI Data IO. Can be configured as either MISO or MOSI
SPI_D[0]	N11	IO	PULL: IPD / IPD DRIVE: Z / Z DVDD_3P3	- PINCTRL171	

(1) I = Input, O = Output, Z = High impedance, S = Supply voltage, GND = Ground, A = Analog signal.
(2) PULL: A / B, where:
A is the state of the internal pull resistor during $\overline{\text{POR}}$ reset
B is the state of the internal pull resistor after $\overline{\text{POR}}$ and Warm reset are de-asserted **and** during Warm reset
IPD = Internal Pulldown Enabled, IPU = Internal Pullup Enabled, DIS = Internal Pull Disabled
DRIVE: A / B, where;
A is the driving state of the pin during $\overline{\text{POR}}$ reset
B is the driving state of the pin after $\overline{\text{POR}}$ and Warm reset are de-asserted **and** during Warm reset
H = Driving High, L = Driving Low, Z = 3-State
For more detailed information on pullup and pulldown resistors and situations where external pullup and pulldown resistors are required, see Section 6.3.1, *Pullup and Pulldown Resistors*.
(3) Specifies the operating IO supply voltage for each signal.

Copyright © 2010–2015, Texas Instruments Incorporated

4.2.16 Timer Signals

Table 4-20. Timer Terminal Functions

SIGNAL NAME	SIGNAL NO.	TYPE(1)	OTHER(2) (3)	MUXED	DESCRIPTION
General-Purpose Timers7-1 and Watchdog Timer					
GP0[3]/ **TCLKIN**	J31	I	PULL: IPD / IPD DRIVE: Z / Z DVDD_3P3	GP0 PINCTRL294	Timer external clock input
Timer7					
TIM7_OUT/ GPMC_A[12]/ GP0[31]	G1	IO	PULL: IPD / IPD DRIVE: L / L DVDD_3P3	GPMC, GP0 PINCTRL206	Timer7 capture event input or PWM output
Timer6					
TIM6_OUT/ GPMC_A[24]/ GP0[30]	H1	IO	PULL: IPD / IPD DRIVE: L / L DVDD_3P3	GPMC, GP0 PINCTRL205	Timer6 capture event input or PWM output
Timer5					
TIM5_OUT/ GP0[29]	H34	IO	PULL: IPD / IPD DRIVE: L / L DVDD_3P3	GP0 PINCTRL204	Timer5 capture event input or PWM output
Timer4					
TIM4_OUT/ GP0[28]	H33	IO	PULL: IPD / IPD DRIVE: L / L DVDD_3P3	GP0 PINCTRL203	Timer4 capture event input or PWM output
Timer3-1					
There are no external pins on these timers for this device.					
Watchdog Timer					
WD_OUT	H36	O	PULL: IPU / IPU DRIVE: H / L DVDD_3P3	- PINCTRL319	Watchdog timer event output

(1) I = Input, O = Output, Z = High impedance, S = Supply voltage, GND = Ground, A = Analog signal.
(2) PULL: A / B, where:
A is the state of the internal pull resistor during $\overline{POR}$ reset
B is the state of the internal pull resistor after $\overline{POR}$ and Warm reset are de-asserted **and** during Warm reset
IPD = Internal Pulldown Enabled, IPU = Internal Pullup Enabled, DIS = Internal Pull Disabled
DRIVE: A / B, where;
A is the driving state of the pin during $\overline{POR}$ reset
B is the driving state of the pin after $\overline{POR}$ and Warm reset are de-asserted **and** during Warm reset
H = Driving High, L = Driving Low, Z = 3-State
For more detailed information on pullup and pulldown resistors and situations where external pullup and pulldown resistors are required, see Section 6.3.1, *Pullup and Pulldown Resistors*.
(3) Specifies the operating IO supply voltage for each signal.

4.2.17 Universal Asynchronous Receiver/Transmitter (UART) Signals

Table 4-21. UART0 Terminal Functions

SIGNAL NAME	SIGNAL NO.	TYPE(1)	OTHER(2) (3)	MUXED	DESCRIPTION
UART0_RXD	N10	I	PULL: IPD / IPD DRIVE: Z / Z DVDD_3P3	- PINCTRL173	UART0 Receive Data Input. Functions as IrDA receive input in IrDA modes and CIR receive input in CIR mode.
UART0_TXD	N8	O	PULL: IPD / DIS DRIVE: L / H DVDD_3P3	- PINCTRL174	UART0 Transmit Data Output. Functions as transmit output in CIR and IrDA modes.
UART0_RTS / GP1[27]	N9	O	PULL: IPU / DIS DRIVE: H / H DVDD_3P3	GP1 PINCTRL175	UART0 Request to Send Output. Indicates module is ready to receive data. Functions as SD output in IrDA mode.
UART0_CTS / GP1[28]	N7	I	PULL: IPU / IPU DRIVE: Z / Z DVDD_3P3	GP1 PINCTRL176	UART0 Clear to Send Input. Has no function in IrDA and CIR modes.
UART0_DTR / GPMC_A[20]/ GPMC_A[12]/ GP1[16]	N6	O	PULL: IPU / DIS DRIVE: H / H DVDD_3P3	GPMC, GP1 PINCTRL177	UART0 Data Terminal Ready Output
UART0_DSR / GPMC_A[19]/ GPMC_A[24]/ GP1[17]	N4	I	PULL: IPU / IPU DRIVE: Z / Z DVDD_3P3	GPMC, GP1 PINCTRL178	UART0 Data Set Ready Input
UART0_DCD / GPMC_A[18]/ GPMC_A[23]/ GP1[18]	N5	I	PULL: IPU / IPU DRIVE: Z / Z DVDD_3P3	GPMC, GP1 PINCTRL179	UART0 Data Carrier Detect Input
UART0_RIN/ GPMC_A[17]/ GPMC_A[22]/ GP1[19]	N3	I	PULL: IPU / IPU DRIVE: Z / Z DVDD_3P3	GPMC, GP1 PINCTRL180	UART0 Ring Indicator Input

(1) I = Input, O = Output, Z = High impedance, S = Supply voltage, GND = Ground, A = Analog signal.
(2) PULL: A / B, where:
A is the state of the internal pull resistor during $\overline{\text{POR}}$ reset
B is the state of the internal pull resistor after $\overline{\text{POR}}$ and Warm reset are de-asserted **and** during Warm reset
IPD = Internal Pulldown Enabled, IPU = Internal Pullup Enabled, DIS = Internal Pull Disabled
DRIVE: A / B, where;
A is the driving state of the pin during $\overline{\text{POR}}$ reset
B is the driving state of the pin after $\overline{\text{POR}}$ and Warm reset are de-asserted **and** during Warm reset
H = Driving High, L = Driving Low, Z = 3-State
For more detailed information on pullup and pulldown resistors and situations where external pullup and pulldown resistors are required, see Section 6.3.1, *Pullup and Pulldown Resistors*.
(3) Specifies the operating IO supply voltage for each signal.

Copyright © 2010–2015, Texas Instruments Incorporated

Table 4-22. UART1 Terminal Functions

SIGNAL NAME	SIGNAL NO.	TYPE(1)	OTHER(2) (3)	MUXED	DESCRIPTION
UART1_RXD/ GPMC_A[26]/ GPMC_A[20]	N1	I	PULL: IPD / IPD DRIVE: Z / Z DVDD_3P3	GPMC PINCTRL181	UART1 Receive Data Input. Functions as IrDA receive input in IrDA modes and CIR receive input in CIR mode.
UART1_TXD/ GPMC_A[25]/ GPMC_A[19]	N2	O	PULL: IPD / DIS DRIVE: L / H DVDD_3P3	GPMC PINCTRL182	UART1 Transmit Data Output. Functions as transmit output in CIR and IrDA modes.
$\overline{\text{UART1_RTS}}$ / GPMC_A[14]/ GPMC_A[18]/ GP1[25]	M2	O	PULL: IPU / DIS DRIVE: H / H DVDD_3P3	GPMC, GP1 PINCTRL183	UART1 Request to Send Output. Indicates module is ready to receive data. Functions as SD output in IrDA mode.
$\overline{\text{UART1_CTS}}$ / GPMC_A[13]/ GPMC_A[17]/ GP1[26]	L3	IO	PULL: IPU / IPU DRIVE: Z / Z DVDD_3P3	GPMC, GP1 PINCTRL184	UART1 Clear to Send Input. Has no function in IrDA and CIR modes.

(1) I = Input, O = Output, Z = High impedance, S = Supply voltage, GND = Ground, A = Analog signal.
(2) PULL: A / B, where:
A is the state of the internal pull resistor during $\overline{\text{POR}}$ reset
B is the state of the internal pull resistor after $\overline{\text{POR}}$ and Warm reset are de-asserted **and** during Warm reset
IPD = Internal Pulldown Enabled, IPU = Internal Pullup Enabled, DIS = Internal Pull Disabled
DRIVE: A / B, where;
A is the driving state of the pin during $\overline{\text{POR}}$ reset
B is the driving state of the pin after $\overline{\text{POR}}$ and Warm reset are de-asserted **and** during Warm reset
H = Driving High, L = Driving Low, Z = 3-State
For more detailed information on pullup and pulldown resistors and situations where external pullup and pulldown resistors are required, see Section 6.3.1, *Pullup and Pulldown Resistors*.
(3) Specifies the operating IO supply voltage for each signal.

Table 4-23. UART2 Terminal Functions

SIGNAL NAME	SIGNAL NO.	TYPE(1)	OTHER(2) (3)	MUXED	DESCRIPTION
UART2_RXD	M1	I	PULL: IPD / IPD DRIVE: Z / Z DVDD_3P3	- PINCTRL185	UART2 Receive Data Input. Functions as IrDA receive input in IrDA modes and CIR receive input in CIR mode.
UART2_TXD	L2	O	PULL: IPD / IPD DRIVE: L / H DVDD_3P3	- PINCTRL186	UART2 Transmit Data Output. Functions as transmit output in CIR and IrDA modes.
$\overline{\text{UART2_RTS}}$ / GPMC_A[15]/ GPMC_A[26]/ GP1[23]	L9	O	PULL: IPU / DIS DRIVE: H / H DVDD_3P3	GPMC, GP1 PINCTRL187	UART2 Request to Send Output. Indicates module is ready to receive data. Functions as SD output in IrDA mode.
$\overline{\text{UART2_CTS}}$ / GPMC_A[16]/ GPMC_A[25]/ GP1[24]	K7	IO	PULL: IPU / IPU DRIVE: Z / Z DVDD_3P3	GPMC, GP1 PINCTRL188	UART2 Clear to Send Input. Has no function in IrDA and CIR modes.

(1) I = Input, O = Output, Z = High impedance, S = Supply voltage, GND = Ground, A = Analog signal.
(2) PULL: A / B, where:
A is the state of the internal pull resistor during $\overline{\text{POR}}$ reset
B is the state of the internal pull resistor after $\overline{\text{POR}}$ and Warm reset are de-asserted **and** during Warm reset
IPD = Internal Pulldown Enabled, IPU = Internal Pullup Enabled, DIS = Internal Pull Disabled
DRIVE: A / B, where;
A is the driving state of the pin during $\overline{\text{POR}}$ reset
B is the driving state of the pin after $\overline{\text{POR}}$ and Warm reset are de-asserted **and** during Warm reset
H = Driving High, L = Driving Low, Z = 3-State
For more detailed information on pullup and pulldown resistors and situations where external pullup and pulldown resistors are required, see Section 6.3.1, *Pullup and Pulldown Resistors*.
(3) Specifies the operating IO supply voltage for each signal.

Copyright © 2010–2015, Texas Instruments Incorporated

4.2.18 Universal Serial Bus (USB) Signals

Table 4-24. USB Terminal Functions

SIGNAL NAME	SIGNAL NO.	TYPE(1)	OTHER(2) (3)	MUXED	DESCRIPTION
USB0					
USB0_DP	P37	A IO	-	-	USB0 bidirectional Data Differential signal pair [positive/negative]. When the USB0 PHY is powered down, these pins should be left unconnected.
USB0_DN	P36	A IO	-	-	
USB0_R1	N37	A O	-	-	USB0 current reference output. When the USB0 peripheral is used, this pin must be connected via a 44.2-Ω ±1% resistor to VSS. When the USB0 PHY is powered down, this pin should be left unconnected.
USB0_DRVVBUS	P35	O	PULL: IPD / IPD DRIVE: L / L DVDD_3P3	- PINCTRL322	When this pin is used as USB0_DRVVBUS and the USB0 Controller is operating as a Host, this signal is used by the USB0 Controller to enable the external VBUS charge pump. When the USB0 PHY is powered down, this pin should be left unconnected.
VDD_USB0_VBUS	N36	I	-	-	USB0 VBUS input (5 V). The voltage level on this pin is sampled to determine session status. When the USB0 PHY is powered down, this pin should be left unconnected.
USB1					
USB1_DP	R37	A IO	-	-	USB1 bidirectional Data Differential signal pair [positive/negative]. When the USB1 PHY is powered down, these pins should be left unconnected.
USB1_DN	R36	A IO	-	-	
USB1_R1	T37	A O	-	-	USB1 current reference output. When the USB1 peripheral is used, this pin must be connected via a 44.2-Ω ±1% resistor to VSS. When the USB1 PHY is powered down, this pin should be left unconnected.
USB1_DRVVBUS	R35	O	PULL: IPD / IPD DRIVE: L / L DVDD_3P3	- PINCTRL323	When this pin is used as USB1_DRVVBUS and the USB1 Controller is operating as a Host, this signal is used by the USB1 Controller to enable the external VBUS charge pump. When the USB1 PHY is powered down, this pin should be left unconnected.
VDD_USB1_VBUS	T36	I	-	-	USB1 VBUS input (5 V). The voltage level on this pin is sampled to determine session status. When the USB1 PHY is powered down, this pin should be left unconnected.

(1) I = Input, O = Output, Z = High impedance, S = Supply voltage, GND = Ground, A = Analog signal.
(2) PULL: A / B, where:
A is the state of the internal pull resistor during $\overline{POR}$ reset
B is the state of the internal pull resistor after $\overline{POR}$ and Warm reset are de-asserted **and** during Warm reset
IPD = Internal Pulldown Enabled, IPU = Internal Pullup Enabled, DIS = Internal Pull Disabled
DRIVE: A / B, where;
A is the driving state of the pin during $\overline{POR}$ reset
B is the driving state of the pin after $\overline{POR}$ and Warm reset are de-asserted **and** during Warm reset
H = Driving High, L = Driving Low, Z = 3-State
For more detailed information on pullup and pulldown resistors and situations where external pullup and pulldown resistors are required, see Section 6.3.1, *Pullup and Pulldown Resistors*.
(3) Specifies the operating IO supply voltage for each signal.

4.2.19 Video Input Signals

Table 4-25. Video Input 0 Terminal Functions

SIGNAL NAME	SIGNAL NO.	TYPE(1)	OTHER(2) (3)	MUXED	DESCRIPTION
VIN[0]A_CLK	AR14	I	PULL: IPD / IPD DRIVE: Z / Z DVDD_3P3	- PINCTRL83	Video Input 0 Port A Clock input. Input clock for 8-bit, 16-bit, or 24-bit Port A video capture.
VIN[0]B_CLK	AR19	I	PULL: IPD / IPD DRIVE: Z / Z DVDD_3P3	- PINCTRL84	Video Input 0 Port B Clock input. Input clock for 8-bit Port B video capture. This signal is not used in 16-bit and 24-bit capture modes.
VIN[0]A_D[23]/ VIN[0]B_HSYNC	AT2	I	PULL: IPD / IPD DRIVE: Z / Z DVDD_3P3	VIN[0]B PINCTRL15	Video Input 0 Port A Data inputs. For 16-bit capture, D[7:0] are Cb/Cr and [15:8] are Y Port A inputs. For 8-bit capture, D[7:0] are Port A YCbCr data inputs and D[15:8] are Port B YCbCr data inputs. For RGB capture, D[23:16] are R, D[15:8] are G, and D[7:0] are B data inputs.
VIN[0]A_D[22]/ VIN[0]B_VSYNC	AR2	I	PULL: IPD / IPD DRIVE: Z / Z DVDD_3P3	VIN[0]B PINCTRL14	
VIN[0]A_D[21]/ VIN[0]B_FLD	AU4	I	PULL: IPD / IPD DRIVE: Z / Z DVDD_3P3	VIN[0]B PINCTRL13	
VIN[0]A_D[20]/ VIN[0]B_DE	AN3	I	PULL: IPD / IPD DRIVE: Z / Z DVDD_3P3	VIN[0]B PINCTRL12	
VIN[0]A_D[19]/ VIN[1]A_DE[0]/ VOUT[1]_C[9]	AK4	I	PULL: IPD / IPD DRIVE: Z / Z DVDD_3P3	VIN[1]A, VOUT[1] PINCTRL25	
VIN[0]A_D[18]/ VIN[1]A_FLD/ VOUT[1]_C[8]	AK5	I	PULL: IPD / IPD DRIVE: Z / Z DVDD_3P3	VIN[1]A, VOUT[1] PINCTRL24	
VIN[0]A_D[17]/ VIN[1]A_VSYNC/ VOUT[1]_VSYNC (silicon revision 1.x) DAC_VOUT[1]_VSYNC (silicon revision 2.x)	AL5	I	PULL: IPD / IPD DRIVE: Z / Z DVDD_3P3	VIN[1]A, VOUT[1] PINCTRL23	
VIN[0]A_D[16]/ VIN[1]A_HSYNC/ VOUT[1]_FLD	AT5	I	PULL: IPD / IPD DRIVE: Z / Z DVDD_3P3	VIN[1]A, VOUT[1] PINCTRL22	

(1) I = Input, O = Output, Z = High impedance, S = Supply voltage, GND = Ground, A = Analog signal.
(2) PULL: A / B, where:
A is the state of the internal pull resistor during $\overline{\text{POR}}$ reset
B is the state of the internal pull resistor after $\overline{\text{POR}}$ and Warm reset are de-asserted **and** during Warm reset
IPD = Internal Pulldown Enabled, IPU = Internal Pullup Enabled, DIS = Internal Pull Disabled
DRIVE: A / B, where;
A is the driving state of the pin during $\overline{\text{POR}}$ reset
B is the driving state of the pin after $\overline{\text{POR}}$ and Warm reset are de-asserted **and** during Warm reset
H = Driving High, L = Driving Low, Z = 3-State
For more detailed information on pullup and pulldown resistors and situations where external pullup and pulldown resistors are required, see Section 6.3.1, *Pullup and Pulldown Resistors*.
(3) Specifies the operating IO supply voltage for each signal.

Copyright © 2010–2015, Texas Instruments Incorporated

Table 4-25. Video Input 0 Terminal Functions (continued)

SIGNAL NAME	SIGNAL NO.	TYPE(1)	OTHER(2) (3)	MUXED	DESCRIPTION
VIN[0]A_D[15]	AU14	I	PULL: IPD / IPD DRIVE: Z / Z DVDD_3P3	- PINCTRL100	Video Input 0 Port A Data inputs. For 16-bit capture, D[7:0] are Cb/Cr and [15:8] are Y Port A inputs. For 8-bit capture, D[7:0] are Port A YCbCr data inputs and D[15:8] are Port B YCbCr data inputs. For RGB capture, D[23:16] are R, D[15:8] are G, and D[7:0] are B data inputs.
VIN[0]A_D[14]	AU15	I	PULL: IPD / IPD DRIVE: Z / Z DVDD_3P3	- PINCTRL99	
VIN[0]A_D[13]	AT15	I	PULL: IPD / IPD DRIVE: Z / Z DVDD_3P3	- PINCTRL98	
VIN[0]A_D[12]	AU16	I	PULL: IPD / IPD DRIVE: Z / Z DVDD_3P3	- PINCTRL97	
VIN[0]A_D[11]	AU17	I	PULL: IPD / IPD DRIVE: Z / Z DVDD_3P3	- PINCTRL96	
VIN[0]A_D[10]	AT16	I	PULL: IPD / IPD DRIVE: Z / Z DVDD_3P3	- PINCTRL95	
VIN[0]A_D[9]	AE16	I	PULL: IPD / IPD DRIVE: Z / Z DVDD_3P3	- PINCTRL94	
VIN[0]A_D[8]	AP17	I	PULL: IPD / IPD DRIVE: Z / Z DVDD_3P3	- PINCTRL93	
VIN[0]A_D[7]	AR17	I	PULL: IPD / IPD DRIVE: Z / Z DVDD_3P3	- PINCTRL92	
VIN[0]A_D[6]	AP18	I	PULL: IPD / IPD DRIVE: Z / Z DVDD_3P3	- PINCTRL91	
VIN[0]A_D[5]	AT17	I	PULL: IPD / IPD DRIVE: Z / Z DVDD_3P3	- PINCTRL90	
VIN[0]A_D[4]	AT18	I	PULL: IPD / IPD DRIVE: Z / Z DVDD_3P3	- PINCTRL89	
VIN[0]A_D[3]	AR18	I	PULL: IPD / IPD DRIVE: Z / Z DVDD_3P3	- PINCTRL88	
VIN[0]A_D[2]	AH18	I	PULL: IPD / IPD DRIVE: Z / Z DVDD_3P3	- PINCTRL87	
VIN[0]A_D[1]	AU18	I	PULL: IPD / IPD DRIVE: Z / Z DVDD_3P3	- PINCTRL86	
VIN[0]A_D[0]	AJ19	I	IPD DVDD_3P3	- PINCTRL85	
VIN[0]A_D[23]/ **VIN[0]B_HSYNC**	AT2	I	PULL: IPD / IPD DRIVE: Z / Z DVDD_3P3	VIN[0]A PINCTRL15	Video Input 0 Port B Horizontal Sync input. Discrete horizontal synchronization signal for Port B 8-bit YCbCr capture without embedded syncs ("BT.601" modes). Not used in RGB or 16-bit YCbCr capture modes
VIN[0]A_HSYNC	AU5	I	PULL: IPD / IPD DRIVE: Z / Z DVDD_3P3	- PINCTRL32	Video Input 0 Port A Horizontal Sync input. Discrete horizontal synchronization signal for Port A RGB capture mode or YCbCr capture without embedded syncs ("BT.601" modes).

Copyright © 2010–2015, Texas Instruments Incorporated

Table 4-25. Video Input 0 Terminal Functions (continued)

SIGNAL NAME	SIGNAL NO.	TYPE(1)	OTHER(2) (3)	MUXED	DESCRIPTION
VIN[0]A_D[22]/ **VIN[0]B_VSYNC**	AR2	I	PULL: IPD / IPD DRIVE: Z / Z DVDD_3P3	VIN[0]A PINCTRL14	Video Input 0 Port B Vertical Sync input. Discrete vertical synchronization signal for Port B 8-bit YCbCr capture without embedded syncs ("BT.601" modes). Not used in RGB or 16-bit YCbCr capture modes.
VIN[0]A_VSYNC	AM4	I	PULL: IPD / IPD DRIVE: Z / Z DVDD_3P3	- PINCTRL33	Video Input 0 Port A Vertical Sync input. Discrete vertical synchronization signal for Port A RGB capture mode or YCbCr capture without embedded syncs ("BT.601" modes).
VIN[0]A_D[21]/ **VIN[0]B_FLD**	AU4	I	PULL: IPD / IPD DRIVE: Z / Z DVDD_3P3	VIN[0]A PINCTRL13	Video Input 0 Port B Field ID input. Discrete field identification signal for Port B 8-bit YCbCr capture without embedded syncs ("BT.601" modes). Not used in RGB or 16-bit YCbCr capture modes
VIN[0]A_FLD	AL4	I	PULL: IPD / IPD DRIVE: Z / Z DVDD_3P3	- PINCTRL34	Video Input 0 Port A Field ID input. Discrete field identification signal for Port A RGB capture mode or YCbCr capture without embedded syncs ("BT.601" modes).
VIN[0]A_D[20]/ **VIN[0]B_DE**	AN3	I	PULL: IPD / IPD DRIVE: Z / Z DVDD_3P3	VIN[0]A PINCTRL12	Video Input 0 Port B Data Enable input. Discrete data valid signal for Port B RGB capture mode or YCbCr capture without embedded syncs ("BT.601" modes).
VIN[0]A_DE	AT3	I	PULL: IPD / IPD DRIVE: Z / Z DVDD_3P3	- PINCTRL35	Video Input 0 Port A Data Enable input. Discrete data valid signal for Port A RGB capture mode or YCbCr capture without embedded syncs ("BT.601" modes).

Copyright © 2010–2015, Texas Instruments Incorporated

Table 4-26. Video Input 1 Terminal Functions

SIGNAL NAME	SIGNAL NO.	TYPE (1)	OTHER (2) (3)	MUXED	DESCRIPTION
VOUT[1]_CLK/ **VIN[1]A_CLK**	AT7	I	PULL: IPD / DIS DRIVE: Z / Z DVDD_3P3	VOUT[1] PINCTRL46	Video Input 1 Port A Clock input. Input clock for 8-bit or 16-bit Port A video capture. Input data is sampled on the CLK0 edge.
VOUT[1]_AVID/ **VIN[1]B_CLK**	AT4	I	PULL: IPD / IPD DRIVE: Z / Z DVDD_3P3	VOUT[1] PINCTRL31	Video Input 1 Port B Clock input. Input clock for 8-bit Port B video capture. Input data is sampled on the CLK1 edge. This signal is not used in 16-bit capture modes.
VOUT[1]_HSYNC (silicon revision 1.x) DAC_VOUT[1]_HSYNC (silicon revision 2.x)/ **VIN[1]A_D[15]**	AR5	I	PULL: IPD / IPD DRIVE: Z / Z DVDD_3P3	VOUT[1] PINCTRL21	Video Input 1 Port A Data inputs. For 16-bit capture, D[7:0] are Cb/Cr and [15:8] are Y Port A inputs. For 8-bit capture, D[7:0] are Port A YCbCr data inputs and D[15:8] are Port B YCbCr data inputs. For VIN[1], only D[15:0] are available.
VIN[1]A_D[14]	AM3	I	PULL: IPD / IPD DRIVE: Z / Z DVDD_3P3	- PINCTRL11	
VOUT[1]_C[7]/ **VIN[1]A_D[13]**	AD13	I	PULL: IPD / IPD DRIVE: Z / Z DVDD_3P3	VOUT[1] PINCTRL10	
VOUT[1]_C[6] **VIN[1]A_D[12]**	AN8	I	PULL: IPD / IPD DRIVE: Z / Z DVDD_3P3	VOUT[1] PINCTRL9	
VOUT[1]_C[5]/ **VIN[1]A_D[11]**	AP8	I	PULL: IPD / IPD DRIVE: Z / Z DVDD_3P3	VOUT[1] PINCTRL8	
VOUT[1]_C[4]/ **VIN[1]A_D[10]**	AN7	I	PULL: IPD / IPD DRIVE: Z / Z DVDD_3P3	VOUT[1] PINCTRL7	
VOUT[1]_C[3]/ **VIN[1]A_D[9]**	AM8	I	PULL: IPD / IPD DRIVE: Z / Z DVDD_3P3	VOUT[1] PINCTRL6	
VOUT[1]_C[2]/ **VIN[1]A_D[8]**	AK6	I	PULL: IPD / IPD DRIVE: Z / Z DVDD_3P3	VOUT[1] PINCTRL20	

(1) I = Input, O = Output, Z = High impedance, S = Supply voltage, GND = Ground, A = Analog signal.
(2) PULL: A / B, where:
A is the state of the internal pull resistor during $\overline{\text{POR}}$ reset
B is the state of the internal pull resistor after $\overline{\text{POR}}$ and Warm reset are de-asserted **and** during Warm reset
IPD = Internal Pulldown Enabled, IPU = Internal Pullup Enabled, DIS = Internal Pull Disabled
DRIVE: A / B, where;
A is the driving state of the pin during $\overline{\text{POR}}$ reset
B is the driving state of the pin after $\overline{\text{POR}}$ and Warm reset are de-asserted **and** during Warm reset
H = Driving High, L = Driving Low, Z = 3-State
For more detailed information on pullup and pulldown resistors and situations where external pullup and pulldown resistors are required, see Section 6.3.1, *Pullup and Pulldown Resistors*.
(3) Specifies the operating IO supply voltage for each signal.

Copyright © 2010–2015, Texas Instruments Incorporated

Table 4-26. Video Input 1 Terminal Functions (continued)

SIGNAL NAME	NO.	TYPE(1)	OTHER(2) (3)	MUXED	DESCRIPTION
VOUT[1]_Y_YC[9]/ **VIN[1]A_D[7]**	AP6	I	PULL: IPD / IPD DRIVE: Z / Z DVDD_3P3	VOUT[1] PINCTRL19	Video Input 1 Port A Data inputs. For 16-bit capture, D[7:0] are Cb/Cr and [15:8] are Y Port A inputs. For 8-bit capture, D[7:0] are Port A YCbCr data inputs and D[15:8] are Port B YCbCr data inputs. For VIN[1], only D[15:0] are available.
VOUT[1]_Y_YC[8]/ **VIN[1]A_D[6]**	AT6	I	PULL: IPD / IPD DRIVE: Z / Z DVDD_3P3	VOUT[1] PINCTRL18	
VOUT[1]_Y_YC[7]/ **VIN[1]A_D[5]**	AR6	I	PULL: IPD / IPD DRIVE: Z / Z DVDD_3P3	VOUT[1] PINCTRL17	
VOUT[1]_Y_YC[6]/ **VIN[1]A_D[4]**	AC13	I	PULL: IPD / IPD DRIVE: Z / Z DVDD_3P3	VOUT[1] PINCTRL16	
VOUT[1]_Y_YC[5]/ **VIN[1]A_D[3]**	AJ7	I	PULL: IPD / DIS DRIVE: Z / Z DVDD_3P3	VOUT[1] PINCTRL50	
VOUT[1]_Y_YC[4]/ **VIN[1]A_D[2]**	AU6	I	PULL: IPD / DIS DRIVE: Z / Z DVDD_3P3	VOUT[1] PINCTRL49	
VOUT[1]_Y_YC[3]/ **VIN[1]A_D[1]**	AP7	I	PULL: IPD / DIS DRIVE: Z / Z DVDD_3P3	VOUT[1] PINCTRL48	
VOUT[1]_Y_YC[2]/ **VIN[1]A_D[0]**	AU7	I	PULL: IPD / DIS DRIVE: Z / Z DVDD_3P3	VOUT[1] PINCTRL47	
VOUT[0]_B_CB_C[0]/ VOUT[1]_C[9]/ **VIN[1]B_HSYNC_DE**	AR9	I	PULL: IPD / IPD DRIVE: Z / Z DVDD_3P3	VOUT[0], VOUT[1] PINCTRL27	Video Input 1 Port B Horizontal Sync or Data Valid signal input. Discrete horizontal synchronization signal for Port B 8-bit YCbCr capture without embedded syncs ("BT.601" modes). Not used in 16-bit YCbCr capture mode.
VIN[0]A_D[16]/ **VIN[1]A_HSYNC/** VOUT[1]_FLD	AT5	I	PULL: IPD / IPD DRIVE: Z / Z DVDD_3P3	VIN[0]A, VOUT[1] PINCTRL22	Video Input 1 Port A Horizontal Sync input. Discrete horizontal synchronization signal for Port A YCbCr capture modes without embedded syncs ("BT.601" modes).
VOUT[0]_G_Y_YC[0]/ VOUT[1]_VSYNC (silicon revision 1.x) DAC_VOUT[1]_VSYNC (silicon revision 2.x)/ **VIN[1]B_VSYNC**	AP9	I	PULL: IPD / IPD DRIVE: Z / Z DVDD_3P3	VOUT[0], VOUT[1] PINCTRL29	Video Input 1 Port B Vertical Sync input. Discrete vertical synchronization signal for Port B 8-bit YCbCr capture without embedded syncs ("BT.601" modes). Not used in 16-bit YCbCr capture mode.
VIN[0]A_D[17]/ **VIN[1]A_VSYNC/** VOUT[1]_VSYNC (silicon revision 1.x) DAC_VOUT[1]_VSYNC (silicon revision 2.x)	AL5	I	PULL: IPD / IPD DRIVE: Z / Z DVDD_3P3	VIN[0]A, VOUT[1] PINCTRL23	Video Input 1 Port A Vertical Sync input. Discrete vertical synchronization signal for Port A YCbCr capture modes without embedded syncs ("BT.601" modes).
VIN[0]A_D[19]/ **VIN[1]A_DE/** VOUT[1]_C[9]	AK4	I	PULL: IPD / IPD DRIVE: Z / Z DVDD_3P3	VIN[0]A, VOUT[1] PINCTRL25	Video Input 1 Port A Data Enable input. Discrete data valid signal for Port A YCbCr capture modes without embedded syncs ("BT.601" modes).
VIN[0]A_D[18]/ **VIN[1]A_FLD/** VOUT[1]_C[8]	AK5	I	PULL: IPD / IPD DRIVE: Z / Z DVDD_3P3	VIN[0]A, VOUT[1] PINCTRL24	Video Input 1Port A Field ID input. Discrete field identification signal for Port A YCbCr capture modes without embedded syncs ("BT.601" modes).
VOUT[0]_G_Y_YC[1]/ VOUT[1]_FLD/ **VIN[1]B_FLD**	AU8	I	PULL: IPD / IPD DRIVE: Z / Z DVDD_3P3	VOUT[0], VOUT[1] PINCTRL30	Video Input 1 Port B Field ID input. Discrete field identification signal for Port B 8-bit YCbCr capture without embedded syncs ("BT.601" modes). Not used in 16-bit YCbCr capture mode.

Copyright © 2010–2015, Texas Instruments Incorporated

4.2.20 Digital Video Output Signals

NOTE

Video output 0 pins AR8 and AL9 and video output 1 pins AT9, AR5, AP9, and AL5 have a different naming convention and functionality for silicon revision 1.x devices and silicon revision 2.x devices. These pins are listed separately in Table 4-28 and Table 4-30.

Table 4-27. Video Output 0 Terminal Functions

SIGNAL NAME	NO.	TYPE (1)	OTHER (2) (3)	MUXED	DESCRIPTION
VOUT[0]_CLK	AT14	O	PULL: IPD / DIS DRIVE: L / H DVDD_3P3	- PINCTRL101	Video Output 0 Clock output.
VOUT[0]_G_Y_YC[9]	AR13	O	PULL: IPD / DIS DRIVE: L / L DVDD_3P3	- PINCTRL109	Video Output 0 Data. These signals represent the 8 MSBs of G/Y/YC video data. For RGB mode they are green data bits, for YUV444 mode they are Y data bits, for Y/C mode they are Y (Luma) data bits and for BT.656 mode they are multiplexed Y/Cb/Cr (Luma and Chroma) data bits.
VOUT[0]_G_Y_YC[8]	AU13	O	PULL: IPD / DIS DRIVE: L / L DVDD_3P3	- PINCTRL108	
VOUT[0]_G_Y_YC[7]	AT13	O	PULL: IPD / DIS DRIVE: L / L DVDD_3P3	- PINCTRL107	
VOUT[0]_G_Y_YC[6]	AE14	O	PULL: IPD / DIS DRIVE: L / L DVDD_3P3	- PINCTRL106	
VOUT[0]_G_Y_YC[5]	AM14	O	PULL: IPD / DIS DRIVE: L / L DVDD_3P3	- PINCTRL105	
VOUT[0]_G_Y_YC[4]	AL14	O	PULL: IPD / DIS DRIVE: L / L DVDD_3P3	- PINCTRL104	
VOUT[0]_G_Y_YC[3]	AP14	O	PULL: IPD / DIS DRIVE: L / L DVDD_3P3	- PINCTRL103	
VOUT[0]_G_Y_YC[2]	AE15	O	PULL: IPD / DIS DRIVE: L / L DVDD_3P3	- PINCTRL102	
VOUT[0]_G_Y_YC[1]/ VOUT[1]_FLD/ VIN[1]B_FLD	AU8	O	PULL: IPD / IPD DRIVE: Z / Z DVDD_3P3	VOUT,[1] VIN[1]B PINCTRL30	Video Output 0 Data. These signals represent the 2 LSBs of G/Y/YC video data for 10-bit, 20-bit and 30-bit video modes (VOUT0 only). For RGB mode they are green data bits, for YUV444 mode they are Y data bits, for Y/C mode they are Y (Luma) data bits and for BT.656 mode they are multiplexed Y/Cb/Cr (Luma and Chroma) data bits. These signals are not used in 8/16/24-bit modes
VOUT[0]_G_Y_YC[0]/ VOUT[1]_VSYNC (silicon revision 1.x) DAC_VOUT[1]_VSYNC (silicon revision 2.x)/ VIN[1]B_VSYNC	AP9	O	PULL: IPD / IPD DRIVE: Z / Z DVDD_3P3	VOUT[1], VIN[1]B PINCTRL29	

(1) I = Input, O = Output, Z = High impedance, S = Supply voltage, GND = Ground, A = Analog signal.
(2) PULL: A / B, where:
A is the state of the internal pull resistor during $\overline{\text{POR}}$ reset
B is the state of the internal pull resistor after $\overline{\text{POR}}$ and Warm reset are de-asserted **and** during Warm reset
IPD = Internal Pulldown Enabled, IPU = Internal Pullup Enabled, DIS = Internal Pull Disabled
DRIVE: A / B, where;
A is the driving state of the pin during $\overline{\text{POR}}$ reset
B is the driving state of the pin after $\overline{\text{POR}}$ and Warm reset are de-asserted **and** during Warm reset
H = Driving High, L = Driving Low, Z = 3-State
For more detailed information on pullup and pulldown resistors and situations where external pullup and pulldown resistors are required, see Section 6.3.1, *Pullup and Pulldown Resistors*.
(3) Specifies the operating IO supply voltage for each signal.

Copyright © 2010–2015, Texas Instruments Incorporated

Table 4-27. Video Output 0 Terminal Functions (continued)

SIGNAL NAME	SIGNAL NO.	TYPE(1)	OTHER(2) (3)	MUXED	DESCRIPTION
VOUT[0]_B_CB_C[9]	AT12	O	PULL: IPD / DIS DRIVE: L / L DVDD_3P3	- PINCTRL117	Video Output 0 Data. These signals represent the 8 MSBs of B/CB/C video data. For RGB mode they are blue data bits, for YUV444 mode they are Cb (Chroma) data bits, for Y/C mode they are multiplexed Cb/Cr (Chroma) data bits and for BT.656 mode they are unused
VOUT[0]_B_CB_C[8]	AH13	O	PULL: IPD / DIS DRIVE: L / L DVDD_3P3	- PINCTRL116	
VOUT[0]_B_CB_C[7]	AM13	O	PULL: IPD / DIS DRIVE: L / L DVDD_3P3	- PINCTRL115	
VOUT[0]_B_CB_C[6]	AJ13	O	PULL: IPD / DIS DRIVE: L / L DVDD_3P3	- PINCTRL114	
VOUT[0]_B_CB_C[5]	AK13	O	PULL: IPD / DIS DRIVE: L / L DVDD_3P3	- PINCTRL113	
VOUT[0]_B_CB_C[4]	AN13	O	PULL: IPD / DIS DRIVE: L / L DVDD_3P3	- PINCTRL112	
VOUT[0]_B_CB_C[3]	AL13	O	PULL: IPD / DIS DRIVE: L / L DVDD_3P3	- PINCTRL111	
VOUT[0]_B_CB_C[2]	AP13	O	PULL: IPD / DIS DRIVE: L / L DVDD_3P3	- PINCTRL110	
VOUT[0]_B_CB_C[1]/ VOUT[1]_HSYNC (silicon revision 1.x) DAC_VOUT[1]_HSYNC (silicon revision 2.x)/ VOUT[1]_AVID	AT9	O	PULL: IPD / IPD DRIVE: Z / Z DVDD_3P3	VOUT[1] PINCTRL28	Video Output 0 Data. These signals represent the 2 LSBs of B/CB/C video data for 20-bit and 30-bit video modes (VOUT[0] only). For RGB mode they are blue data bits, for YUV444 mode they are Cb (Chroma) data bits, for Y/C mode they are multiplexed Cb/Cr (Chroma) data bits and for BT.656 mode they are unused. These signals are not used in 16/24-bit modes.
VOUT[0]_R_CR[9]/ **VOUT[0]_B_CB_C[1]**/ VOUT[1]_Y_YC[9]	AU9	O	PULL: IPD / DIS DRIVE: L / L DVDD_3P3	VOUT[0], VOUT[1] PINCTRL125	
VOUT[0]_B_CB_C[0]/ VOUT[1]_C[9]/ VIN[1]B_HSYNC_DE	AR9	O	PULL: IPD / IPD DRIVE: Z / Z DVDD_3P3	VOUT[1], VIN[1]B PINCTRL27	
VOUT[0]_R_CR[8]/ **VOUT[0]_B_CB_C[0]**/ VOUT[1]_Y_YC[8]	AK10	O	PULL: IPD / DIS DRIVE: L / L DVDD_3P3	VOUT[0], VOUT[1] PINCTRL124	

Copyright © 2010–2015, Texas Instruments Incorporated

Table 4-27. Video Output 0 Terminal Functions (continued)

SIGNAL NAME	NO.	TYPE(1)	OTHER(2) (3)	MUXED	DESCRIPTION
VOUT[0]_R_CR[9]/ VOUT[0]_B_CB_C[1]/ VOUT[1]_Y_YC[9]	AU9	O	PULL: IPD / DIS DRIVE: L / L DVDD_3P3	VOUT[0], VOUT[1] PINCTRL125	Video Output 0 Data. These signals represent the 8 MSBs of R/CR video data. For RGB mode they are red data bits, for YUV444 mode they are Cr (Chroma) data bits, for Y/C mode and BT.656 modes they are unused.
VOUT[0]_R_CR[8]/ VOUT[0]_B_CB_C[0]/ VOUT[1]_Y_YC[8]	AK10	O	PULL: IPD / DIS DRIVE: L / L DVDD_3P3	VOUT[0], VOUT[1] PINCTRL124	
VOUT[0]_R_CR[7]/ VOUT[0]_G_Y_YC[1]/ VOUT[1]_Y_YC[7]	AL10	O	PULL: IPD / DIS DRIVE: L / L DVDD_3P3	VOUT[0], VOUT[1] PINCTRL123	
VOUT[0]_R_CR[6]/ VOUT[0]_G_Y_YC[0]/ VOUT[1]_Y_YC[6]	AU10	O	PULL: IPD / DIS DRIVE: L / L DVDD_3P3	VOUT[0], VOUT[1] PINCTRL122	
VOUT[0]_R_CR[5]/ VOUT[0]_AVID/ VOUT[1]_Y_YC[5]	AT10	O	PULL: IPD / DIS DRIVE: L / L DVDD_3P3	VOUT[0], VOUT[1] PINCTRL121	
VOUT[0]_R_CR[4]/ VOUT[0]_FLD/ VOUT[1]_Y_YC[4]	AG13	O	PULL: IPD / DIS DRIVE: L / L DVDD_3P3	VOUT[0], VOUT[1] PINCTRL120	
VOUT[0]_R_CR[3]/ VOUT[0]_VSYNC/ VOUT[1]_Y_YC[3]	AR11	O	PULL: IPD / DIS DRIVE: L / L DVDD_3P3	VOUT[0], VOUT[1] PINCTRL119	
VOUT[0]_R_CR[2]/ VOUT[0]_HSYNC/ VOUT[1]_Y_YC[2]	AT11	O	PULL: IPD / DIS DRIVE: L / L DVDD_3P3	VOUT[0], VOUT[1] PINCTRL118	
VOUT[0]_R_CR[1]	AT8	O	PULL: IPD / IPD DRIVE: Z / Z DVDD_3P3	- PINCTRL40	Video Output 0 Data. These signals represent the 2 LSBs of R/CR video data for 30-bit video modes (VOUT[0] only). For RGB mode they are red data bits, for YUV444 mode they are Cr (Chroma) data bits, for Y/C mode and BT.656 modes they are unused. These signals are not used in 24-bit mode.
VOUT[0]_R_CR[0]/ VOUT[1]_C[8]/ VOUT[1]_CLK	AJ11	O	PULL: IPD / IPD DRIVE: Z / Z DVDD_3P3	VOUT[1] PINCTRL26	
VOUT[0]_VSYNC	AN9	O	PULL: IPD / IPD DRIVE: Z / Z DVDD_3P3	- PINCTRL37	Video Output 0 Vertical Sync output. This is the discrete vertical synchronization output. This signal is not used for embedded sync modes.
VOUT[0]_R_CR[3]/ **VOUT[0]_VSYNC**/ VOUT[1]_Y_YC[3]	AR11	O	PULL: IPD / DIS DRIVE: L / L DVDD_3P3	VOUT[0], VOUT[1] PINCTRL119	
VOUT[0]_HSYNC	AM9	O	PULL: IPD / IPD DRIVE: Z / Z DVDD_3P3	- PINCTRL36	Video Output 0 Horizontal Sync output. This is the discrete horizontal synchronization output. This signal is not used for embedded sync modes.
VOUT[0]_R_CR[2]/ **VOUT[0]_HSYNC**/ VOUT[1]_Y_YC[2]	AT11	O	PULL: IPD / DIS DRIVE: L / L DVDD_3P3	VOUT[0], VOUT[1] PINCTRL118	
VOUT[0]_R_CR[4]/ **VOUT[0]_FLD**/ VOUT[1]_Y_YC[4]	AG13	O	PULL: IPD / DIS DRIVE: L / L DVDD_3P3	VOUT[0], VOUT[1] PINCTRL120	Video Output 0 Field ID output. This is the discrete field identification output. This signal is not used for embedded sync modes.
VOUT[0]_R_CR[5]/ **VOUT[0]_AVID**/ VOUT[1]_Y_YC[5]	AT10	O	PULL: IPD / DIS DRIVE: L / L DVDD_3P3	VOUT[0], VOUT[1] PINCTRL121	Video Output 0 Active Video output. This is the discrete active video indicator output. This signal is not used for embedded sync modes.

Table 4-28. Video Output 0 [Pins AR8, AL9] Terminal Functions

SIGNAL NAME	NO.	TYPE (1)	OTHER (2) (3)	MUXED	DESCRIPTION
Silicon Revision 1.x Devices					
HSYNC_VOUT[0]_AVID	AR8	O	PULL: IPD / IPD DRIVE: Z / Z DVDD_3P3	- PINCTRL39	Video Output 0 Active Video output. This is the discrete active video indicator output. This signal is not used for embedded sync modes.
VSYNC_VOUT[0]_FLD	AL9	O	PULL: IPD / IPD DRIVE: Z / Z DVDD_3P3	- PINCTRL38	Video Output 0 Field ID output. This is the discrete field identification output. This signal is not used for embedded sync modes.
Silicon Revision 2.x Devices					
DAC_HSYNC_ VOUT[0]_AVID	AR8	O	PULL: IPD / IPD DRIVE: Z / Z DVDD_3P3	- PINCTRL39	Pin supports two functions in silicon revision 2.x devices: 1. Video Output 0 Active Video output. This is the discrete active video indicator output. This signal is not used for embedded sync modes. 2. Discrete Horizontal Sync for HD-DACs. Functionality is set in SPARE_CTRL0 register as defined in Section 9.10.
DAC_VSYNC_ VOUT[0]_FLD	AL9	O	PULL: IPD / IPD DRIVE: Z / Z DVDD_3P3	- PINCTRL38	Pin supports two functions in silicon revision 2.x devices: 1. Video Output 0 Field ID output. This is the discrete field identification output. This signal is not used for embedded sync modes. 2. Discrete Vertical Sync for HD-DACs. Functionality is set in SPARE_CTRL0 register as defined in Section 9.10.

(1) I = Input, O = Output, Z = High impedance, S = Supply voltage, GND = Ground, A = Analog signal.
(2) PULL: A / B, where:
A is the state of the internal pull resistor during $\overline{POR}$ reset
B is the state of the internal pull resistor after $\overline{POR}$ and Warm reset are de-asserted **and** during Warm reset
IPD = Internal Pulldown Enabled, IPU = Internal Pullup Enabled, DIS = Internal Pull Disabled
DRIVE: A / B, where;
A is the driving state of the pin during $\overline{POR}$ reset
B is the driving state of the pin after $\overline{POR}$ and Warm reset are de-asserted **and** during Warm reset
H = Driving High, L = Driving Low, Z = 3-State
For more detailed information on pullup and pulldown resistors and situations where external pullup and pulldown resistors are required, see Section 6.3.1, *Pullup and Pulldown Resistors*.
(3) Specifies the operating IO supply voltage for each signal.

Copyright © 2010–2015, Texas Instruments Incorporated

Table 4-29. Video Output 1 Terminal Functions

SIGNAL NAME	NO.	TYPE (1)	OTHER (2) (3)	MUXED	DESCRIPTION
VOUT[0]_R_CR[0]/ VOUT[1]_C[8]/ **VOUT[1]_CLK**	AJ11	O	PULL: IPD / IPD DRIVE: Z / Z DVDD_3P3	VOUT[0], VOUT[1] PINCTRL26	Video Output 1 Clock output
VOUT[1]_CLK/ VIN[1]A_CLK	AT7	O	PULL: IPD / DIS DRIVE: Z / Z DVDD_3P3	VIN[1]A PINCTRL46	
VOUT[0]_R_CR[9]/ VOUT[0]_B_CB_C[1]/ **VOUT[1]_Y_YC[9]**	AU9	O	PULL: IPD / DIS DRIVE: L / L DVDD_3P3	VOUT[0] PINCTRL125	Video Output 1 Data. These signals represent the 8 bits of Y/YC video data. For Y/C mode they are Y (Luma) data bits and for BT.656 mode they are multiplexed Y/Cb/Cr (Luma and Chroma) data bits.
VOUT[1]_Y_YC[9]/ VIN[1]A_D[7]	AP6	O	PULL: IPD / IPD DRIVE: Z / Z DVDD_3P3	VIN[1]A PINCTRL19	
VOUT[0]_R_CR[8]/ VOUT[0]_B_CB_C[0]/ **VOUT[1]_Y_YC[8]**	AK10	O	PULL: IPD / DIS DRIVE: L / L DVDD_3P3	VOUT[0] PINCTRL124	
VOUT[1]_Y_YC[8]/ VIN[1]A_D[6]	AT6	O	PULL: IPD / IPD DRIVE: Z / Z DVDD_3P3	VIN[1]A PINCTRL18	
VOUT[0]_R_CR[7]/ VOUT[0]_G_Y_YC[1]/ **VOUT[1]_Y_YC[7]**	AL10	O	PULL: IPD / DIS DRIVE: L / L DVDD_3P3	VOUT[0] PINCTRL123	
VOUT[1]_Y_YC[7]/ VIN[1]A_D[5]	AR6	O	PULL: IPD / IPD DRIVE: Z / Z DVDD_3P3	VIN[1]A PINCTRL17	
VOUT[0]_R_CR[6]/ VOUT[0]_G_Y_YC[0]/ **VOUT[1]_Y_YC[6]**	AU10	O	PULL: IPD / DIS DRIVE: L / L DVDD_3P3	VOUT[0] PINCTRL122	
VOUT[1]_Y_YC[6]/ VIN[1]A_D[4]	AC13	O	PULL: IPD / IPD DRIVE: Z / Z DVDD_3P3	VIN[1]A PINCTRL16	

(1) I = Input, O = Output, Z = High impedance, S = Supply voltage, GND = Ground, A = Analog signal.
(2) PULL: A / B, where:
A is the state of the internal pull resistor during $\overline{\text{POR}}$ reset
B is the state of the internal pull resistor after $\overline{\text{POR}}$ and Warm reset are de-asserted **and** during Warm reset
IPD = Internal Pulldown Enabled, IPU = Internal Pullup Enabled, DIS = Internal Pull Disabled
DRIVE: A / B, where;
A is the driving state of the pin during $\overline{\text{POR}}$ reset
B is the driving state of the pin after $\overline{\text{POR}}$ and Warm reset are de-asserted **and** during Warm reset
H = Driving High, L = Driving Low, Z = 3-State
For more detailed information on pullup and pulldown resistors and situations where external pullup and pulldown resistors are required, see Section 6.3.1, *Pullup and Pulldown Resistors*.
(3) Specifies the operating IO supply voltage for each signal.

Copyright © 2010–2015, Texas Instruments Incorporated

Table 4-29. Video Output 1 Terminal Functions (continued)

SIGNAL NAME	NO.	TYPE(1)	OTHER(2) (3)	MUXED	DESCRIPTION
VOUT[0]_R_CR[5]/ VOUT[0]_AVID/ **VOUT[1]_Y_YC[5]**	AT10	O	PULL: IPD / DIS DRIVE: L / L DVDD_3P3	VOUT[0] PINCTRL121	Video Output 1 Data. These signals represent the 8 bits of Y/YC video data. For Y/C mode they are Y (Luma) data bits and for BT.656 mode they are multiplexed Y/Cb/Cr (Luma and Chroma) data bits.
VOUT[1]_Y_YC[5]/ VIN[1]A_D[3]	AJ7	O	PULL: IPD / DIS DRIVE: Z / Z DVDD_3P3	VIN[1]A PINCTRL50	
VOUT[0]_R_CR[4]/ VOUT[0]_FLD/ **VOUT[1]_Y_YC[4]**	AG13	O	PULL: IPD / DIS DRIVE: L / L DVDD_3P3	VOUT[0] PINCTRL120	
VOUT[1]_Y_YC[4]/ VIN[1]A_D[2]	AU6	O	PULL: IPD / DIS DRIVE: Z / Z DVDD_3P3	VIN[1]A PINCTRL49	
VOUT[0]_R_CR[3]/ VOUT[0]_VSYNC / **VOUT[1]_Y_YC[3]**	AR11	O	PULL: IPD / DIS DRIVE: L / L DVDD_3P3	VOUT[0] PINCTRL119	
VOUT[1]_Y_YC[3] VIN[1]A_D[1]	AP7	O	PULL: IPD / DIS DRIVE: Z / Z DVDD_3P3	VIN[1]A PINCTRL48	
VOUT[0]_R_CR[2]/ VOUT[0]_HSYNC/ **VOUT[1]_Y_YC[2]**	AT11	O	PULL: IPD / DIS DRIVE: L / L DVDD_3P3	VOUT[0] PINCTRL118	
VOUT[1]_Y_YC[2]/ VIN[1]A_D[0]	AU7	O	PULL: IPD / DIS DRIVE: Z / Z DVDD_3P3	VIN[1]A PINCTRL47	
VOUT[0]_B_CB_C[0]/ **VOUT[1]_C[9]/** VIN[1]B_HSYNC_DE	AR9	O	PULL: IPD / IPD DRIVE: Z / Z DVDD_3P3	VOUT[0], VIN[1]B PINCTRL27	Video Output 1 Data. These signals represent the 8 bits of C video data. For Y/C mode they are multiplexed Cb/Cr (Chroma) data bits, and for BT.656 mode they are unused.
VIN[0]A_D[19]/ VIN[1]A_DE/ **VOUT[1]_C[9]**	AK4	O	PULL: IPD / IPD DRIVE: Z / Z DVDD_3P3	VIN[0]A, VIN[1]A	
VIN[0]A_D[18]/ VIN[1]A_FLD/ **VOUT[1]_C[8]**	AK5	O	PULL: IPD / IPD DRIVE: Z / Z DVDD_3P3	VIN[0]A, VIN[1]A PINCTRL24	
VOUT[0]_R_CR[0]/ **VOUT[1]_C[8]/** VOUT[1]_CLK	AJ11	O	PULL: IPD / IPD DRIVE: Z / Z DVDD_3P3	VOUT[0], VOUT[1] PINCTRL26	
VOUT[1]_C[7]/ VIN[1]A_D[13]	AD13	O	PULL: IPD / IPD DRIVE: Z / Z DVDD_3P3	VIN[1]A PINCTRL10	
VOUT[1]_C[6]/ VIN[1]A_D[12]	AN8	O	PULL: IPD / IPD DRIVE: Z / Z DVDD_3P3	VIN[1]A PINCTRL9	
VOUT[1]_C[5]/ VIN[1]A_D[11]	AP8	O	PULL: IPD / IPD DRIVE: Z / Z DVDD_3P3	VIN[1]A PINCTRL8	
VOUT[1]_C[4]/ VIN[1]A_D[10]	AN7	O	PULL: IPD / IPD DRIVE: Z / Z DVDD_3P3	VIN[1]A PINCTRL7	
VOUT[1]_C[3]/ VIN[1]A_D[9]/	AM8	O	PULL: IPD / IPD DRIVE: Z / Z DVDD_3P3	VIN[1]A PINCTRL6	
VOUT[1]_C[2]/ VIN[1]A_D[8]	AK6	O	PULL: IPD / IPD DRIVE: Z / Z DVDD_3P3	VIN[1]A PINCTRL20	

Copyright © 2010–2015, Texas Instruments Incorporated

Table 4-29. Video Output 1 Terminal Functions (continued)

SIGNAL NAME	NO.	TYPE(1)	OTHER(2) (3)	MUXED	DESCRIPTION
VIN[0]A_D[16]/ VIN[1]A_HSYNC/ **VOUT[1]_FLD**	AT5	O	PULL: IPD / IPD DRIVE: Z / Z DVDD_3P3	VIN[0]A, VIN[1]A PINCTRL22	Video Output 1 Field ID output. This is the discrete field identification output. This signal is not used for embedded sync modes.
VOUT[0]_G_Y_YC[1]/ **VOUT[1]_FLD**/ VIN[1]B_FLD	AU8	O	PULL: IPD / IPD DRIVE: Z / Z DVDD_3P3	VOUT[0], VIN[1]B PINCTRL30	
VOUT[0]_B_CB_C[1]/ VOUT[1]_HSYNC (silicon revision 1.x) DAC_VOUT[1]_HSYNC (silicon revision 2.x)/ **VOUT[1]_AVID**	AT9	O	PULL: IPD / IPD DRIVE: Z / Z DVDD_3P3	VOUT[0], VOUT[1] PINCTRL28	Video Output 1 Active Video output. This is the discrete active video indicator output. This signal is not used for embedded sync modes.
VOUT[1]_AVID/ VIN[1]B_CLK	AT4	O	PULL: IPD / IPD DRIVE: Z / Z DVDD_3P3	VIN[1]B PINCTRL31	

Table 4-30. Video Output 1 [Pins AT9, AR5, AP9, AL5] Terminal Functions

SIGNAL NAME	NO.	TYPE(1)	OTHER(2) (3)	MUXED	DESCRIPTION
Silicon Revision 1.x Devices					
VOUT[0]_B_CB_C[1]/ **VOUT[1]_HSYNC**/ VOUT[1]_AVID	AT9	O	PULL: IPD / IPD DRIVE: Z / Z DVDD_3P3	VOUT[0], VOUT[1] PINCTRL28	Video Output 1 Horizontal Sync output. This is the discrete horizontal synchronization output. This signal is not used for embedded sync modes.
VOUT[1]_HSYNC/ VIN[1]A_D[15]	AR5	O	PULL: IPD / IPD DRIVE: Z / Z DVDD_3P3	VIN[1]A PINCTRL21	
VOUT[0]_G_Y_YC[0]/ **VOUT[1]_VSYNC**/ VIN[1]B_VSYNC	AP9	O	PULL: IPD / IPD DRIVE: Z / Z DVDD_3P3	VOUT[0], VIN[1]B PINCTRL29	Video Output 1 Vertical Sync output. This is the discrete vertical synchronization output. This signal is not used for embedded sync modes.
VIN[0]A_D[17]/ VIN[1]A_VSYNC/ **VOUT[1]_VSYNC**	AL5	O	PULL: IPD / IPD DRIVE: Z / Z DVDD_3P3	VIN[0]A, VIN[1]A PINCTRL23	
Silicon Revision 2.x Devices					
VOUT[0]_B_CB_C[1]/ **DAC_VOUT[1]_HSYNC**/ VOUT[1]_AVID	AT9	O	PULL: IPD / IPD DRIVE: Z / Z DVDD_3P3	VOUT[0], VOUT[1] PINCTRL28	Pin supports two functions in silicon revision 2.x devices: 1. Video Output 1 Horizontal Sync output. This is the discrete horizontal synchronization output. This signal is not used for embedded sync modes. 2. Discrete Horizontal Sync for HD-DACs. Functionality is set in SPARE_CTRL0 register as defined in Section 9.10.
DAC_VOUT[1]_HSYNC/ VIN[1]A_D[15]	AR5	O	PULL: IPD / IPD DRIVE: Z / Z DVDD_3P3	VIN[1]A PINCTRL21	

(1) I = Input, O = Output, Z = High impedance, S = Supply voltage, GND = Ground, A = Analog signal.
(2) PULL: A / B, where:
A is the state of the internal pull resistor during $\overline{\text{POR}}$ reset
B is the state of the internal pull resistor after $\overline{\text{POR}}$ and Warm reset are de-asserted **and** during Warm reset
IPD = Internal Pulldown Enabled, IPU = Internal Pullup Enabled, DIS = Internal Pull Disabled
DRIVE: A / B, where;
A is the driving state of the pin during $\overline{\text{POR}}$ reset
B is the driving state of the pin after $\overline{\text{POR}}$ and Warm reset are de-asserted **and** during Warm reset
H = Driving High, L = Driving Low, Z = 3-State
For more detailed information on pullup and pulldown resistors and situations where external pullup and pulldown resistors are required, see Section 6.3.1, *Pullup and Pulldown Resistors*.
(3) Specifies the operating IO supply voltage for each signal.

Copyright © 2010–2015, Texas Instruments Incorporated

Table 4-30. Video Output 1 [Pins AT9, AR5, AP9, AL5] Terminal Functions (continued)

SIGNAL NAME	NO.	TYPE(1)	OTHER(2) (3)	MUXED	DESCRIPTION
VOUT[0]_G_Y_YC[0]/ **DAC_VOUT[1]_VSYNC**/ VIN[1]B_VSYNC	AP9	O	PULL: IPD / IPD DRIVE: Z / Z DVDD_3P3	VOUT[0], VIN[1]B PINCTRL29	Pin supports two functions in silicon revision 2.x devices: 1. Video Output 1 Vertical Sync output. This is the discrete vertical synchronization output. This signal is not used for embedded sync modes. 2. Discrete Vertical Sync for HD-DACs. Functionality is set in SPARE_CTRL0 register as defined in Section 9.10.
VIN[0]A_D[17]/ VIN[1]A_VSYNC/ **DAC_VOUT[1]_VSYNC**	AL5	O	PULL: IPD / IPD DRIVE: Z / Z DVDD_3P3	VIN[0]A, VIN[1]A PINCTRL23	

Copyright © 2010–2015, Texas Instruments Incorporated

4.2.21 Analog Video Output Signals

Table 4-31. Analog Video Output Terminal Functions

SIGNAL NAME	SIGNAL NO.	TYPE (1)	OTHER	DESCRIPTION
When a specific Video DAC output [IOUTA - IOUTG] is powered down, the corresponding Analog Video Output terminal functions should be left unconnected.				
IOUTA	AT21	O	-	Video DAC A output. Analog HD Video DAC (G/Y)
IOUTB	AR21	O	-	Video DAC B output. Analog HD Video DAC (B/Pb)
IOUTC	AP21	O	-	Video DAC C output. Analog HD Video DAC (R/Pr)
IOUTD	AR20	O	-	Video DAC D output. Analog SD Video DAC
IOUTE	AT19	O	-	Video DAC E output. Analog SD Video DAC
IOUTF	AT20	O	-	Video DAC F output. Analog SD Video DAC
IOUTG	AU20	O	-	Video DAC G output. Analog SD Video DAC
DAC_VOUT[1]_HSYNC, DAC_HSYNC_ VOUT[0]_AVID	AR5, AT9, AR8	O	-	Analog HD Video DAC Discrete HSYNC Output
DAC_VOUT[1]_VSYNC, DAC_VSYNC_ VOUT[0]_FLD	AL5, AP9, AL9	O	-	Analog HD Video DAC Discrete VSYNC Output
VDAC_VREF	AH19	I	-	Video DAC reference voltage (0.5 V). When the video DACs are powered down, this pin should be left unconnected.
VDAC_RBIAS_HD	AE22	IO	-	Video DAC HD current bias connection. This pin must be connected via an external 1.2-kΩ resistor to VSSA_HD. When the HD DACs are powered down, this pin should be left unconnected.
VDAC_RBIAS_SD	AP19	IO	-	Video DAC SD current bias connection. This pin must be connected via an external 1.2-kΩ resistor to VSSA_SD. When the SD DACs are powered down, this pin should be left unconnected.

(1) I = Input, O = Output, Z = High impedance, S = Supply voltage, GND = Ground, A = Analog signal.

4.2.22 Reserved Pins

Table 4-32. Reserved Terminal Functions

SIGNAL NAME	SIGNAL NO.	TYPE(1)	OTHER(2) (3)	DESCRIPTION
RSV1	AB36	O	-	Reserved. (Leave unconnected, ***do not*** connect to power or ground.)
RSV2	P25	O	-	Reserved. (Leave unconnected, ***do not*** connect to power or ground.)
RSV3	N19	O	-	Reserved. (Leave unconnected, ***do not*** connect to power or ground.)
RSV4	N20	O	-	Reserved. (Leave unconnected, ***do not*** connect to power or ground.)
RSV5	T28	IO	-	Reserved. (Leave unconnected, ***do not*** connect to power or ground.)
RSV6	T27	IO	-	Reserved. (Leave unconnected, ***do not*** connect to power or ground.)
RSV7	AE23	O	-	Reserved. (Leave unconnected, ***do not*** connect to power or ground.)
RSV8	D24	O	-	Reserved. (Leave unconnected, ***do not*** connect to power or ground.)
RSV9	AU37	I	-	Reserved. (Leave unconnected, ***do not*** connect to power or ground.)
RSV10	N28	IO	-	Reserved. (Leave unconnected, ***do not*** connect to power or ground.)
RSV11	N29	IO	-	Reserved. (Leave unconnected, ***do not*** connect to power or ground.)
RSV12	AG25	S	-	Reserved. For proper device operation, this pin **must** be tied directly to the 1.8-V supply.
RSV13	AG24	S	-	Reserved. For proper device operation, this pin **must** be tied directly to the 1.8-V supply.
RSV14	AH25	S	-	Reserved. For proper device operation, this pin **must** be tied directly to the 1.8-V supply.
RSV15	AH24	S	-	Reserved. For proper device operation, this pin **must** be tied directly to the 1.8-V supply.
RSV16	R34	I	-	Reserved. For proper device operation, this pin **must** be tied directly to V_{SS}.
RSV17	P34	O	-	Reserved. (Leave unconnected, ***do not*** connect to power or ground.)
RSV18	P33	S	-	Reserved. For proper device operation, this pin **must** be tied directly to the 1.8-V supply.
RSV19	P32	GND	-	Reserved. For proper device operation, this pin **must** be tied directly to V_{SS}.
RSV20	D14	O	-	Reserved. (Leave unconnected, ***do not*** connect to power or ground.)
RSV21	AN18	O	-	Reserved. (Leave unconnected, ***do not*** connect to power or ground.)
RSV22	AN19	O	-	Reserved. (Leave unconnected, ***do not*** connect to power or ground.)
RSV23	AP2	I	IPD DVDD_3P3	Reserved. (Leave unconnected, ***do not*** connect to power or ground.)
RSV24	AU3	I	IPD DVDD_3P3	Reserved. (Leave unconnected, ***do not*** connect to power or ground.)
RSV25	AN2	I	IPD DVDD_3P3	Reserved. (Leave unconnected, ***do not*** connect to power or ground.)
RSV26	AT1	I	IPD DVDD_3P3	Reserved. (Leave unconnected, ***do not*** connect to power or ground.)
RSV27	AR1	I	IPD DVDD_3P3	Reserved. (Leave unconnected, ***do not*** connect to power or ground.)
RSV28	AP1	O	DIS DVDD_3P3	Reserved. (Leave unconnected, ***do not*** connect to power or ground.)
RSV29	AM2	O	DIS DVDD_3P3	Reserved. (Leave unconnected, ***do not*** connect to power or ground.)
RSV30	AL2	O	DIS DVDD_3P3	Reserved. (Leave unconnected, ***do not*** connect to power or ground.)

(1) I = Input, O = Output, Z = High impedance, S = Supply voltage, GND = Ground, A = Analog signal.
(2) IPD = Internal Pulldown Enabled, IPU = Internal Pullup Enabled, DIS = Internal Pull Disabled. This represents the default state of the internal pull after reset. For more detailed information on pullup and pulldown resistors and situations where external pullup and pulldown resistors are required, see Section 6.3.1, *Pullup and Pulldown Resistors*.
(3) Specifies the operating IO supply voltage for each signal.

Copyright © 2010–2015, Texas Instruments Incorporated

Table 4-32. Reserved Terminal Functions (continued)

SIGNAL NAME	SIGNAL NO.	TYPE(1)	OTHER(2) (3)	DESCRIPTION
RSV31	AK1	O	DIS DVDD_3P3	Reserved. (Leave unconnected, ***do not*** connect to power or ground.)
RSV32	AL1	O	DIS DVDD_3P3	Reserved. (Leave unconnected, ***do not*** connect to power or ground.)
RSV33	AM29	I	IPD DVDD_3P3	Reserved. (Leave unconnected, ***do not*** connect to power or ground.)
RSV34	AL28	I	IPD DVDD_3P3	Reserved. (Leave unconnected, ***do not*** connect to power or ground.)
RSV35	AL29	I	IPD DVDD_3P3	Reserved. (Leave unconnected, ***do not*** connect to power or ground.)
RSV36	AN29	I	IPD DVDD_3P3	Reserved. (Leave unconnected, ***do not*** connect to power or ground.)
RSV37	AP29	I	IPD DVDD_3P3	Reserved. (Leave unconnected, ***do not*** connect to power or ground.)
RSV38	AR29	O	DIS DVDD_3P3	Reserved. (Leave unconnected, ***do not*** connect to power or ground.)
RSV39	AT29	O	DIS DVDD_3P3	Reserved. (Leave unconnected, ***do not*** connect to power or ground.)
RSV40	AT28	O	DIS DVDD_3P3	Reserved. (Leave unconnected, ***do not*** connect to power or ground.)
RSV41	AU21	O	-	Reserved. (Leave unconnected, ***do not*** connect to power or ground.)
RSV42	AJ1	IO	IPU DVDD_3P3	Reserved. (Leave unconnected, ***do not*** connect to power or ground.)
RSV43	AK2	IO	IPU DVDD_3P3	Reserved. (Leave unconnected, ***do not*** connect to power or ground.)
RSV44	AH8	O	DIS DVDD_3P3	Reserved. (Leave unconnected, ***do not*** connect to power or ground.)
RSV45	AJ2	O	DIS DVDD_3P3	Reserved. (Leave unconnected, ***do not*** connect to power or ground.)
RSV46	AK3	O	DIS DVDD_3P3	Reserved. (Leave unconnected, ***do not*** connect to power or ground.)
RSV47	AJ3	O	DIS DVDD_3P3	Reserved. (Leave unconnected, ***do not*** connect to power or ground.)
RSV48	AJ4	I	IPD DVDD_3P3	Reserved. (Leave unconnected, ***do not*** connect to power or ground.)
RSV49	AJ5	I	IPD DVDD_3P3	Reserved. (Leave unconnected, ***do not*** connect to power or ground.)
RSV50	AJ6	I	IPD DVDD_3P3	Reserved. (Leave unconnected, ***do not*** connect to power or ground.)
RSV51	AB13	I	IPD DVDD_3P3	Reserved. (Leave unconnected, ***do not*** connect to power or ground.)
RSV52	AE21	S	-	Reserved. For proper device operation, this pin should be connected to a 1.0-V power supply.
RSV53	AG22	S	-	Reserved. For proper device operation, this pin should be connected to a 1.8-V power supply.
RSV54	AG23	S	-	Reserved. For proper device operation, this pin should be connected to a 1.8-V power supply.
RSV55	AH23	S	-	Reserved. For proper device operation, this pin should be connected to a 1.8-V power supply.
RSV56	AJ23	S	-	Reserved. For proper device operation, this pin should be connected to a 1.8-V power supply.
RSV57	AK22	GND	-	Reserved. For proper device operation, this pin **must** be tied directly to V_{SS}.
RSV58	AL22	GND	-	Reserved. For proper device operation, this pin **must** be tied directly to V_{SS}.

Copyright © 2010–2015, Texas Instruments Incorporated

Table 4-32. Reserved Terminal Functions (continued)

SIGNAL NAME	SIGNAL NO.	TYPE(1)	OTHER(2) (3)	DESCRIPTION
RSV59	AM22	GND	-	Reserved. For proper device operation, this pin **must** be tied directly to V_{SS}.
RSV60	AM21	GND	-	Reserved. For proper device operation, this pin **must** be tied directly to V_{SS}.
RSV61	AN21	GND	-	Reserved. For proper device operation, this pin **must** be tied directly to V_{SS}.

Copyright © 2010–2015, Texas Instruments Incorporated

4.2.23 Supply Voltages

Table 4-33. Supply Terminal Functions

SIGNAL NAME	SIGNAL NO.	TYPE(1)	OTHER	DESCRIPTION
VREFSSTL_DDR[0]	A17	S	-	Reference Power Supply DDR[0]: • 0.75-V for DDR3 memory type • 0.9-V for DDR2 memory type
VREFSSTL_DDR[1]	A21	S	-	Reference Power Supply DDR[1] • 0.75-V for DDR3 memory type • 0.9-V for DDR2 memory type
CVDD	AD22, AD21, AD20, AD19, AD18, AD17, AD16, AC22, AC21, AC20, AC19, AC18, AC17, AC16, AB24, AB23, AB22, AB21, AB20, AB19, AB18, AB17, AB16, AB15, AB14, T24, T23, T22, T21, T20, T19, T18, T17, T16, T15, T14, R22, R21, R20, R19, R18, R17, R16, P22, P21, P20, P19, P18, P17, P16	S	-	Variable Core Voltage Supply for the Always ON Domain
CVDDC	AE25, AE13, AD24, AD23, AD15, AD14, AC24, AC23, AC15, AC14, R24, R23, R15, R14, P24, P23, P15, P14, N25, N13	S	-	1.0-V Constant Power Supply for Memories and PLLs
VDD_USB_0P9	N27	S	-	0.9-V Power Supply for USB PHYs. **Note:** If the USB is not used, for proper device operation, this pin ***must*** be connected to a power supply (0.9 V or CVDDC).
VDDT_SATA	Y34, Y33, V34, V32	S	-	1.0-V Power Supply for SATA Termination and Analog Front End **Note:** If the SATA is not used, for proper device operation, these pins ***must*** be connected to a 1.0-V power supply.
VDDT_PCIE	Y30, Y28, AB32, AB29, AB27	S	-	1.0-V Power Supply for PCIe Termination and Analog Front End **Note:** If the PCIe is not used, these pins should be connected to a 1.0-V power supply.
VDDA_PLL	B18, A18	S	-	1.5-V Analog Power Supply for PLLs
VDDA_HDMI	AR27, AP24, AP23, AN24, AN23	S	-	1.0-V Analog Power Supply for HDMI **Note:** If the HDMI is not used, these pins should be connected to a 1.0-V power supply.
VDDA_HD_1P0	AG21	S	-	1.0-V Analog Power Supply for VDAC HD DAC **Note:** If the HD DAC is not used, this pin should be connected to a 1.0-V power supply.
VDDA_SD_1P0	AG20	S	-	1.0-V Analog Power Supply for VDAC SD DAC **Note:** If the SD DAC is not used, this pin should be connected to a 1.0-V power supply.
VDDR_SATA	V25, U25	S	-	1.5-V Regulator Power Supply for SATA **Note:** If the SATA is not used, for proper device operation, these pins ***must*** be connected to a 1.5-V power supply.

(1) I = Input, O = Output, Z = High impedance, S = Supply voltage, GND = Ground, A = Analog signal.

Copyright © 2010–2015, Texas Instruments Incorporated

Table 4-33. Supply Terminal Functions (continued)

SIGNAL NAME	SIGNAL NO.	TYPE[1]	OTHER	DESCRIPTION
VDDR_PCIE	Y25, W25	S	-	1.5-V Regulator Power Supply for PCIe **Note:** If the PCIe is not used, for proper device operation, these pins ***must*** be connected to a 1.5-V power supply.
DVDD_DDR[0]	L19, L18, L17, L16, L15, L14, K19, K18, K17, K16, K15, K14, J18, J17, J16, J15, J14, E11, A11, E1, A2	S	-	Power Supply for DDR[0] IOs: • 1.5-V for DDR3 memory type • 1.8-V for DDR2 memory type
DVDD_DDR[1]	L24, L23, L22, L21, L20, K24, K23, K22, K21, K20, J24, J23, J22, J21, J20, J19, E27, D37, A36, A27	S	-	1.5-V Power Supply for DDR[1] IOs: • 1.5-V for DDR3 memory type • 1.8-V for DDR2 memory type
DEVOSC_DVDD18	E19	S	-	1.8-V Power Supply for Device Oscillator **Note:** If the oscillator is not used, this pin should be connected to the 1.8-V power supply (DVDD1P8).
VDD_USB0_1P8	R25	S	-	1.8-V Power Supply for USB0 **Note:** If the USB is not used, for proper device operation, this pin ***must*** be connected to a 1.8-V power supply, or when the USB PHY is not used, this pin can be *optionally* connected to CVDDC.
VDD_USB1_1P8	T25	S	-	1.8-V Power Supply for USB1 **Note:** If the USB is not used, for proper device operation, this pin ***must*** be connected to a 1.8-V power supply, or when the USB PHY is not used, this pin can be *optionally* connected to CVDDC.
DVDD1P8	AJ20, AJ24	S	-	1.8-V Power Supply
VDDA_REF_1P8	AT22	S	-	1.8-V Reference Power Supply for VDAC **Note:** If the VDAC is not used, these pins should be connected to a 1.8-V power supply.
VDDA_HD_1P8	AJ22, AH22	S	-	1.8-V Analog Power Supply for VDAC HD DAC **Note:** If the HD DAC is not used, these pins should be connected to a 1.8-V power supply.
VDDA_SD_1P8	AJ21, AH21, AH20	S	-	1.8-V Analog Power Supply for VDAC SD DAC **Note:** If the SD DAC is not used, these pins should be connected to a 1.8-V power supply.

Copyright © 2010–2015, Texas Instruments Incorporated

Table 4-33. Supply Terminal Functions (continued)

SIGNAL NAME	SIGNAL NO.	TYPE[1]	OTHER	DESCRIPTION
DVDD_3P3	AU29, AU11, AU2, AN37, AN27, AN11, AN1, AJ17, AJ16, AJ15, AJ14, AH17, AH16, AH15, AH14, AG33, AG17, AG16, AG15, AG14, AE29, AE28, AE27, AD29, AD28, AD27, AD11, AD10, AD9, AC29, AC28, AC27, AC11, AC10, AC9, AB11, AB10, AB9, AA11, AA10, AA9, AA1, Y9, U11, U10, U9, T11, T10, T9, R28, R27, R11, R10, R9, P30, P29, P28, P27, P11, P10, P9, P8, L35, L30, L5, L1	S	-	3.3-V Power Supply
VDD_USB0_3P3	T29, R29	S	-	3.3-V Power Supply for USB0
VDD_USB1_3P3	T30, R30	S	-	3.3-V Power Supply for USB1

4.2.24 Ground Pins (V_{SS})

Table 4-34. Ground Terminal Functions

SIGNAL NAME	SIGNAL NO.	TYPE(1)	OTHER	DESCRIPTION
VSS	AU28, AU23, AU12, AU1, AT23, AR25, AR24, AR23, AR15, AP37, AP15, AN15, AN14, AM31, AM25, AM24, AM23, AM19, AM18, AM17, AM16, AM15, AM7, AM1, AL32, AL31, AL24, AL23, AL19, AL18, AL17, AL16, AL15, AL7, AL6, AK27, AK24, AK23, AK19, AK18, AK17, AK16, AK15, AK11, AJ25, AJ18, AG30, AG26, AG12, AG8, AG5, AF27, AF11, AE20, AE19, AE18, AE17, AD34, AD33, AD32, AD31, AD30, AD7, AD6, AD5, AC34, AC33, AC32, AC31, AC30, AC8, AC7, AC6, AC4, AC3, AB37, AB35, AB8, AB7, AB6, AB1, AA24, AA23, AA22, AA21, AA20, AA19, AA18, AA17, AA16, AA15, AA14, AA13, AA8, AA7, AA6, AA5, Y37, Y36, Y32, Y31, Y24, Y23, Y22, Y21, Y20, Y19, Y18, Y17, Y16, Y15, Y14, Y13, Y8, Y7, Y6, Y5, Y4, W24, W23, W22, W21, W20, W19, W18, W17, W16	GND	-	Ground (GND)

(1) I = Input, O = Output, Z = High impedance, S = Supply voltage, GND = Ground, A = Analog signal.

Copyright © 2010–2015, Texas Instruments Incorporated

Table 4-34. Ground Terminal Functions (continued)

SIGNAL NAME	SIGNAL NO.	TYPE[1]	OTHER	DESCRIPTION
VSS	W15, W14, W13, W9, W8, W7, W6, V28, V27, V24, V23, V22, V21, V20, V19, V18, V17, V16, V15, V14, V13, V9, V8, V7, V6, V5, V4, U24, U23, U22, U21, U20, U18, U17, U16, U15, U14, U13, U8, U7, U6, U5, T35, T34, T33, T8, T7, T6, R33, R32, R31, R8, R7, R6, R4, R3, P31, P7, P6, P5, P4, N18, M27, M11, L33, L26, L12, L8, K37, K1, H27, H24, H23, H22, H21, H20, H19, H18, H17, H16, H15, H14, H11, G32, G31, G24, G23, G22, G21, G20, G18, G17, G16, G15, G14, G7, G6, F31, F24, F23, F22, F21, F17, F16, F15, F14, F7, E37, E24, E14, D1, C23, C21, C17, C15, A37, A28, A10, A1	GND	-	Ground (GND)
VSSA_PLL	U19, B20, A20	GND	-	Analog GND for PLLs
VSSA_HD	AK21, AK20, AL21	GND	-	Analog GND for VDAC HD DAC
VSSA_SD	AU19, AM20, AN20, AL20	GND	-	Analog GND for VDAC SD DAC
VSSA_REF_1P8	AU22	GND	-	Reference GND for VDAC (1.8 V)
DEVOSC_VSS	B19	GND	-	Ground for Device Oscillator

5 Specifications

5.1 Absolute Maximum Ratings (Unless Otherwise Noted)(1)(2)

		MIN	MAX	UNIT
Steady State Supply voltage ranges:	USB PHYs, 0.9 V (VDD_USB_0P9)	-0.3	1.35	V
	Core (CVDD, CVDDC, VDDT_SATA, VDDT_PCIE, VDDA_HDMI, VDDA_HD_1P0, VDDA_SD_1P0)	-0.3	1.2	V
	IO, 1.5 V (VDDA_PLL, VDDR_SATA, VDDR_PCIE, DVDD_DDR0, DVDD_DDR1)(3)	-0.3	2.45	V
	IO, 1.8 V (DVDD1P8, DEVOSC_DVDD18, VDD_USB0_1P8, VDD_USB1_1P8, VDDA_REF_1P8, VDDA_HD_1P8, VDDA_SD_1P8, DVDD_DDR0, DVDD_DDR1)(3)	-0.3	2.45	V
	IO, 3.3 V (DVDD_3P3, VDD_USB0_3P3, VDD_USB1_3P3)	0	3.8	V
Input and Output voltage ranges:	V IO, 1.5-V pins	-0.3 -0.3	2.45 DVDD_DDRx + 0.3(3)	V
	V IO, 1.8-V pins	-0.3 -0.3 -0.3	2.45 DVDD1P8 + 0.3 DVDD_DDRx + 0.3(3)	V
	V IO, 3.3-V pins (Steady State)	-0.3 -0.3	3.8 DVDD_3P3 + 0.3	V
	V IO, 3.3-V pins (Transient Overshoot and Undershoot)	20% of DVDD_3P3 for up to 20% of the signal period		V
Operating junction temperature range, T_J:(4)	(default)	0	95	°C
	extended temperature	-40	105	
Storage temperature range, T_{stg}:	(Default)	-55	150	°C

(1) Stresses beyond those listed under "absolute maximum ratings" may cause permanent damage to the device. These are stress ratings only, and functional operation of the device at these or any other conditions beyond those indicated under "recommended operating conditions" is not implied. Exposure to absolute-maximum-rated conditions for extended periods may affect device reliability.
(2) All voltage values are with respect to VSS.
(3) For supply voltage pins, DVDD_DDRx:
- 1.5 V is used for DDR3 SDRAM.
- 1.8 V is used for DDR2 SDRAM.

(4) A heat dissipation solution is required for proper device operation. Thermal performance of the overall system must be carefully considered to ensure conformance with the recommended operating conditions. Heat generated by this device must be removed with the help of heat sinks, heat spreaders, or airflow. SmartReflex can significantly lower the power consumption of this device and its use is required for proper device operation. A thermal model can be provided for thermal simulation to estimate the system thermal environment. Contact your local TI representative for availability.

5.2 ESD Ratings

		VALUE	UNIT
ESD stress voltage, V_{ESD}:(1)	HBM (Human Body Model)(2)	±1000	V
	CDM (Charged-Device Model)(3)	±250	V

(1) Electrostatic discharge (ESD) to measure device sensitivity or immunity to damage caused by electrostatic discharges into the device.
(2) Level listed above is the passing level per ANSI, ESDA, and JEDEC JS-001-2010. JEDEC document JEP155 states that 500 V HBM allows safe manufacturing with a standard ESD control process, and manufacturing with less than 500 V HBM is possible if necessary precautions are taken. Pins listed as 1000 V may actually have higher performance.
(3) Level listed above is the passing level per EIA-JEDEC JESD22-C101E. JEDEC document JEP157 states that 250 V CDM allows safe manufacturing with a standard ESD control process. Pins listed as 250 V may actually have higher performance.

Copyright © 2010–2015, Texas Instruments Incorporated

5.3 Recommended Operating Conditions

			MIN	NOM	MAX	UNIT
CVDD	Supply voltage, Variable Core, Adaptive Voltage Scaling (CVDD)(1)	Initial Startup	VINITnom × 0.95	1.00 or 1.05(2)	VINITnom × 1.05	V
		CYGA120 & CYG135	SRnom(3) × 0.95	0.85 - 1.00	SRnom × 1.05	
		CYG120	SRnom × 0.95	0.85-1.10	SRnom × 1.05	
CVDDC	Supply voltage, Constant Core (CVDDC, VDDT_SATA, VDDT_PCIE, VDDA_HDMI, VDDA_HD_1P0, VDDA_SD_1P0)		0.95	1	1.05	V
DVDD	Supply voltage, IO, 3.3 V (DVDD_3P3, VDD_USB0_3P3, VDD_USB1_3P3) (except I2C pins)		3.13	3.3	3.47	V
	Supply voltage, IO, I2C (DVDD_3P3)		3.13	3.3	3.47	V
	Supply voltage, IO, 1.8 V (DVDD1P8, DEVOSC_DVDD18, VDD_USB0_1P8, VDD_USB1_1P8, VDDA_REF_1P8, VDDA_HD_1P8, VDDA_SD_1P8, DVDD_DDR0, DVDD_DDR1)(4)		1.71	1.8	1.89	V
	Supply voltage, IO, 1.5 V (VDDA_PLL, VDDR_SATA, VDDR_PCIE, DVDD_DDR0, DVDD_DDR1)(4)		1.43	1.5	1.58	V
	Supply voltage, IO, 0.9 V (VDD_USB_0P9)		0.85	0.9	0.95	V
VSS	Supply ground (VSS, VSSA_PLL, VSSA_HD, VSSA_SD, VSSA_REF_1P8, DEVOSC_VSS)(5)		0	0	0	V
DDR_VREF	DDR2 and DDR3 reference voltage(6)		0.48DVDD_DDRx	0.5DVDD_DDRx	0.52DVDD_DDRx	V
V_{IH}	High-level input voltage, 3.3 V (except I2C pins)		2			V
	High-level input voltage, I2C		0.7DVDD_3P3			
	High-level input voltage, 1.8 V		0.65DVDD1P8			
V_{IL}	Low-level input voltage, 3.3 V (except I2C pins)				0.8	V
	Low-level input voltage, I2C				0.3DVDD_3P3	
	Low-level input voltage, 1.8 V				0.35DVDD1P8	
I_{OH}	High-level output current	6-mA IO buffers			-6	mA
		DDR[0], DDR[1] buffers @ 50-Ω impedance setting			-8	
I_{OL}	Low-level output current	6-mA IO buffers			6	mA
		DDR[0], DDR[1] buffers @ 50-Ω impedance setting			8	
V_{ID}	Differential input voltage (SERDES_CLKN and SERDES_CLKP), [AC coupled]		0.25		2.0	V

(1) This device supports, and requires the use of, SmartReflex technology with Adaptive Voltage Scaling based on die temperature and performance. The SmartReflex codes output from the device correspond to up to 32 linear voltage steps within the specified voltage range (32 steps is the recommended software upper limit and is not constrained by the silicon design), with the option to use fewer steps if desired, with a minimum of eight steps. TI requires that users design a supply that can handle multiple voltage steps within this range with ± 5% tolerances. Not incorporating a flexible supply may limit the system's ability to use the power saving capabilities of the SmartReflex technology. TI recommends using a fault-tolerant power supply design to protect against over-current conditions. For more details about adaptive voltage scaling for this device, see the AVS FAQ. For AVS disable data to aid in design of robust power supplies that may withstand momentary AVS control failure, see the device Power Estimation Spreadsheet (literature number SPRABK3).
(2) The initial CVDD voltage at power on must be 1.00V nominal (for CYGA120 and CYG135 devices) or 1.05V nominal (for CYG120 devices) and it must transition to the AVS target value adjusted by a AVS driver. This is required to maintain full power functionality and reliability targets specified by TI.
(3) SRnom refers to the unique SmartReflex core supply voltage set from the factory for each individual device.
(4) For supply voltage pins, DVDD_DDRx:
- 1.5 V is used for DDR3 SDRAM.
- 1.8 V is used for DDR2 SDRAM.

(5) Oscillator ground (DEVOSC_VSS) must be kept separate from other grounds and connected directly to the crystal load capacitor ground.
(6) DDR_VREF is expected to equal 0.5DVDD_DDRx of the transmitting device and to track variations in the DVDD_DDRx.

Copyright © 2010–2015, Texas Instruments Incorporated

Recommended Operating Conditions *(continued)*

		MIN	NOM	MAX	UNIT
t_t	Transition time, 10%-90%, All Inputs (unless otherwise specified in the electrical data sections)			Lesser of 0.25P or 10 (7)	ns
T_J	Operating junction temperature range (8)	0		95	°C
	Extended operating junction temperature range	-40		105	

(7) P = the period of the applied signal. Maintaining transition times as fast as possible is recommended to improve noise immunity on input signals.
(8) A heat dissipation solution is required for proper device operation. Thermal performance of the overall system must be carefully considered to ensure conformance with the recommended operating conditions. Heat generated by this device must be removed with the help of heat sinks, heat spreaders, or airflow. SmartReflex can significantly lower the power consumption of this device and its use is required for proper device operation. A thermal model can be provided for thermal simulation to estimate the system thermal environment. Contact your local TI representative for availability.

Copyright © 2010–2015, Texas Instruments Incorporated

Electrical Characteristics Over Recommended Ranges of Supply Voltage and Operating Temperature (Unless Otherwise Noted)

PARAMETER		TEST CONDITIONS(1)	MIN	TYP	MAX	UNIT
V_{OH}	Low and full speed: USB_DN and USB_DP		2.8		VDD_USBx_3P3	V
	High speed: USB_DN and USB_DP		360		440	mV
	High-level output voltage (3.3-V IO)	DVDD_3P3 = MIN, I_{OH} = MAX	2.4			V
V_{OL}	Low and full speed: USB_DN and USB_DP		0.0		0.3	V
	High speed: USB_DN and USB_DP		-10		10	mV
	Low-level output voltage (3.3-V IO except I2C pins)	DVDD_3P3 = MIN, I_{OL} = MAX			0.4	V
	Low-level output voltage (3.3-V IO I2C pins)	IO = 3 mA			0.4	V
I_I(2)	Input current [DC] (except I2C pins)	VI = VSS to DVDD_3P3 without opposing internal resistor			±1	µA
		VI = VSS to DVDD_3P3 with opposing internal pullup resistor(3)		100		µA
		VI = VSS to DVDD_3P3 with opposing internal pulldown resistor(3)		-100		µA
	Input current [DC] (I2C)	VI = VSS to DVDD_3P3			±20	µA
I_{OZ}(4)	IO Off-state output current	VO = DVDD_3P3 or VSS; internal pull disabled			±5	µA
		VO = DVDD_3P3 or VSS; internal pull enabled		±100		µA
I_{CDD}	Constant Core (CVDDC) supply current(5)	• Case Temp = 60ºC • ARM at 1.2 GHz, 70% utilization • HDMI display • SGX530 at 150 MHz, 15 fps • EMIF0 and EMIF1 at 200 MHz, 1120 MBps • USB 1x, EMAC 1x • AVS Variable Core voltage = 0.8 V		1093		mA
	Variable Core (CVDD) supply current(5)			4099		
I_{DDD}	3.3-V IO (DVDD_3P3, USB_VDDA3P3) supply current(5)	• Case Temp = 60ºC • ARM at 1.2 GHz, 70% utilization • HDMI display • SGX530 at 150 MHz, 15 fps • EMIF0 and EMIF1 at 200 MHz, 1120 MBps • USB 1x, EMAC 1x • AVS Variable Core voltage = 0.8 V		19		mA
	1.8-V IO (DVDD1P8, DVDD_DDRx) supply current(5)(6)			11		
	1.5-V IO (DVDD_DDRx) supply current(5)(6)			235		

(1) For test conditions shown as MIN, MAX, or TYP, use the appropriate value specified in the recommended operating conditions table.
(2) I_I applies to input-only pins and bi-directional pins. For input-only pins, I_I indicates the input leakage current. For bi-directional pins, I_I indicates the input leakage current and off-state (Hi-Z) output leakage current.
(3) Applies only to pins with an internal pullup (IPU) or pulldown (IPD) resistor.
(4) I_{OZ} applies to output-only pins, indicating off-state (Hi-Z) output leakage current.
(5) The actual current draw varies across manufacturing processes and is highly application-dependent. For use-case specific power estimates, see the device Power Estimation Spreadsheet (literature number SPRABK3).
(6) For supply voltage pins, DVDD_DDRx:
- 1.5 V is used for DDR3 SDRAM.
- 1.8 V is used for DDR2 SDRAM.

Copyright © 2010–2015, Texas Instruments Incorporated

Electrical Characteristics Over Recommended Ranges of Supply Voltage and Operating Temperature (Unless Otherwise Noted) *(continued)*

PARAMETER		TEST CONDITIONS(1)	MIN	TYP	MAX	UNIT
C_I	Input capacitance				2.8	pF
C_o	Output capacitance				2.8	pF

5.4 Thermal Resistance Characteristics

Table 5-1. Thermal Resistance Characteristics (PBGA Package) [CYG]

NO.			°C/W(1)
1	$R\Theta_{JC}$	Junction-to-case	0.21
2	$R\Theta_{JB}$	Junction-to-board	3.93

(1) For proper device operation, a heatsink is required.

Copyright © 2010–2015, Texas Instruments Incorporated

6 Device Configurations

6.1 Control Module

The device control module includes status and control logic not addressed within the peripherals or the remainder of the device infrastructure. This module is the primary point of control for the following areas of the device:

- Functional IO multiplexing
- Device status
- Static device configuration
- Open-core protocol (OCP) interface for standard and customer programmable e-Fuse bit shift registers.

The control module primarily implements a bank of registers accessible (read and write) by the software along with some read-only registers carrying status information. Most register bits are exported as control signals for other logic blocks on the device. Certain control module registers have default values based upon the device type as decoded from e-Fuse.

The read and write registers can be divided into the following classes:

- Static device configuration registers
- Status and configuration registers
- Boot registers

Table 6-1 shows the general register groupings and Table 6-2 through Table 6-4 provide register summaries for each group.

Table 6-1. Control Module Register Map

ADDRESS OFFSET	REGISTER GROUP	SEE
0x0000 - 0x0020	OCP Configuration registers	Table 6-2
0x0024 - 0x003C	Reserved	
0x0040 – 0x00FC	Device Boot registers	Table 6-7
0x0300 - 0x03FC	Reserved	
0x0400 - 0x05FC	PLL Control registers	Table 6-3
0x0600 - 0x07FC	Device Configuration registers	Table 6-4
0x0800 - 0x0FFC	PAD Control registers	Section 6.5

Table 6-2. OCP Configuration Registers Summary

HEX ADDRESS	ACRONYM	REGISTER NAME
0x4814 0000	CONTROL_REVISION	Control module Revision number
0x4814 0004 - 0x4814 000C	-	Reserved
0x4814 0010	CONTROL_SYSCONFIG	Idle mode parameters
0x4814 0014 - 0x4814 003C	-	Reserved

Table 6-3. PLL Control Registers Summary

HEX ADDRESS	ACRONYM	REGISTER NAME
0x4814 0400	MAINPLL_CTRL	Main PLL base frequency control
0x4814 0404	MAINPLL_PWD	Main PLL clock output powerdown
0x4814 0408	MAINPLL_FREQ1	Main Clock 1 fractional divider
0x4814 040C	MAINPLL_DIV1	Main Clock 1 post divider
0x4814 0410	MAINPLL_FREQ2	Main Clock 2 fractional divider
0x4814 0414	MAINPLL_DIV2	Main Clock 2 post divider

Copyright © 2010–2015, Texas Instruments Incorporated

Table 6-3. PLL Control Registers Summary (continued)

HEX ADDRESS	ACRONYM	REGISTER NAME
0x4814 0418	MAINPLL_FREQ3	Main Clock 3 fractional divider
0x4814 041C	MAINPLL_DIV3	Main Clock 3 post divider
0x4814 0420	MAINPLL_FREQ4	Main Clock 4 fractional divider
0x4814 0424	MAINPLL_DIV4	Main Clock 4 post divider
0x4814 0428	MAINPLL_FREQ5	Main Clock 5 fractional divider
0x4814 042C	MAINPLL_DIV5	Main Clock 5 post divider
0x4814 0430	-	Reserved
0x4814 0434	MAINPLL_DIV6	Main Clock 6 post divider
0x4814 0438	-	Reserved
0x4814 043C	MAINPLL_DIV7	Main Clock 7 post divider
0x4814 0440	DDRPLL_CTRL	DDR PLL base frequency control
0x4814 0444	DDRPLL_PWD	DDR PLL clock output powerdown
0x4814 0448	-	Reserved
0x4814 044C	DDR_PLL_DIV1	DDR Clock 1 post divider
0x4814 0450	DDRPLL_FREQ2	DDR Clock 2 fractional divider
0x4814 0454	DDR_PLL_DIV2	DDR Clock 2 post divider
0x4814 0458	DDRPLL_FREQ3	DDR Clock 3 fractional divider
0x4814 045C	DDR_PLL_DIV3	DDR Clock 3 post divider
0x4814 0460	DDRPLL_FREQ4	DDR Clock 4 fractional divider
0x4814 0464	DDR_PLL_DIV4	DDR Clock 4 post divider
0x4814 0468	DDRPLL_FREQ5	DDR Clock 5 fractional divider
0x4814 046C	DDR_PLL_DIV5	DDR Clock 5 post divider
0x4814 0470	VIDEOPLL_CTRL	Video PLL base frequency control
0x4814 0474	VIDEOPLL_PWD	Video PLL clock output powerdown
0x4814 0478	VIDEOPLL_FREQ1	Video Clock 1 fractional divider
0x4814 047C	VIDEOPLL_DIV1	Video Clock 1 post divider
0x4814 0480	VIDEOPLL_FREQ2	Video Clock 2 fractional divider
0x4814 0484	VIDEOPLL_DIV2	Video Clock 2 post divider
0x4814 0488	VIDEOPLL_FREQ3	Video Clock 3 fractional divider
0x4814 048C	VIDEOPLL_DIV3	Video Clock 3 post divider
0x4814 0490 - 0x4814 049C	-	Reserved
0x4814 04A0	AUDIOPLL_CTRL	Audio PLL base frequency control
0x4814 04A4	AUDIOPLL_PWD	Audio PLL clock output powerdown
0x4814 04A8	-	Reserved
0x4814 04AC	-	Reserved
0x4814 04B0	AUDIOPLL_FREQ2	Audio Clock 2 fractional divider
0x4814 04B4	AUDIOPLL_DIV2	Audio Clock 2 post divider
0x4814 04B8	AUDIOPLL_FREQ3	Audio Clock 3 fractional divider
0x4814 04BC	AUDIOPLL_DIV3	Audio Clock 3 post divider
0x4814 04C0	AUDIOPLL_FREQ4	Audio Clock 4 fractional divider
0x4814 04C4	AUDIOPLL_DIV4	Audio Clock 4 post divider
0x4814 04C8	AUDIOPLL_FREQ5	Audio Clock 5 fractional divider
0x4814 04CC	AUDIOPLL_DIV5	Audio Clock 5 post divider
0x4814 04D0 - 0x4814 05FC	-	Reserved

Copyright © 2010–2015, Texas Instruments Incorporated

Table 6-4. Device Configuration Registers Summary

HEX ADDRESS	ACRONYM	REGISTER NAME
0x4814 0600	DEVICE_ID	Device Identification
0x4814 0604	-	Reserved
0x4814 0608	INIT_PRESSURE_0	L3 Initiator Pressure
0x4814 060C	INIT_PRESSURE_1	L3 Initiator Pressure
0x4814 0610	-	Reserved
0x4814 0614	TPTC_CFG	Transfer Controller Configuration
0x4814 0618	DDR_CTRL	DDR Interface Control
0x4814 061C	-	Reserved
0x4814 0620	USB_CTRL	USB Control
0x4814 0624	USBPHY_CTRL0	USB0 Phy Control
0x4814 0628	-	Reserved
0x4814 062C	USBPHY_CTRL1	USB1 Phy Control
0x4814 0630	MAC_ID0_LO	Ethernet MAC Address 0
0x4814 0634	MAC_ID0_HI	Ethernet MAC Address 0
0x4814 0638	MAC_ID1_LO	Ethernet MAC Address 1
0x4814 063C	MAC_ID1_HI	Ethernet MAC Address 1
0x4814 0640	PCIE_CFG	PCIe Module Configuration
0x4814 0644	-	Reserved
0x4814 0648	CLK_CTRL	Input Oscillator Control
0x4814 064C	AUDIO_CTRL	Audio Control
0x4814 0650	-	Reserved
0x4814 0654	OCMEM_SLEEP	On-Chip Memory Sleep Mode Configuration
0x4814 0658 - 0x4814 065C	-	Reserved
0x4814 0660	HD_DAC_CTRL	HD DAC Control
0x4814 0664	HD_DACA_CAL	HD DAC A Calibration
0x4814 0668	HD_DACB_CAL	HD DAC B Calibration
0x4814 066C	HD_DACC_CAL	HD DAC C Calibration
0x4814 0670	SD_DAC_CTRL	SD DAC Control
0x4814 0674	SD_DACA_CAL	SD DAC A Calibration
0x4814 0678	SD_DACB_CAL	SD DAC B Calibration
0x4814 067C	SD_DACC_CAL	SD DAC C Calibration
0x4814 0680	SD_DACD_CAL	SD DAC D Calibration
0x4814 068C	BANDGAP_CTRL	DAC Band-gap Control
0x4814 0690	HW_EVT_SEL_GRP1	System Trace Hardware Event Select Group 1
0x4814 0694	HW_EVT_SEL_GRP2	System Trace Hardware Event Select Group 2
0x4814 0698	HW_EVT_SEL_GRP3	System Trace Hardware Event Select Group 3
0x4814 069C	HW_EVT_SEL_GRP4	System Trace Hardware Event Select Group 4
0x4814 06A0 - 0x4814 06F4	-	Reserved
0x4814 06F8	HDMI_OBSCLK_CTRL	HDMI Observe Clock Control
0x4814 06FC	SERDES_CTRL	Serdes Control
0x4814 0700	UCB_CLK_CTL	USB Clock Control
0x4814 0704	PLL_OBSCLK_CTRL	PLL Observe Clock Control
0x4814 0708	-	Reserved
0x4814 070C	DDR_RCD	RCD Power Enable or Disable
0x4814 0710 - 0x4814 07FC	-	Reserved

Copyright © 2010–2015, Texas Instruments Incorporated

6.2 Revision Identification

The silicon revision can be read in the DEVREV bit field value of the device identification (DEVICE_ID) register (located at 0x4814 0600). The DEVREV field of the DEVICE_ID register changes between silicon revisions. Table 6-5 lists the contents of the device revision (DEVREV) field value for each revision of the device.

Table 6-5. Device Revision (DEVREV) Bit Field Value

SILICON REVISION	DEVICE REVISION FIELD VALUE DEVREV[31:28]
2.0	0010
1.1	0001
1.0	0000

More details on the DEVICE_ID register can be found in the *AM389x Sitara ARM Processors Technical Reference Manual* (literature number SPRUGX7).

6.3 Debugging Considerations

6.3.1 Pullup and Pulldown Resistors

Proper board design should ensure that input pins to the device always be at a valid logic level and not floating. This may be achieved via pullup and pulldown resistors. The device features internal pullup (IPU) and internal pulldown (IPD) resistors on most pins to eliminate the need, unless otherwise noted, for external pullup or pulldown resistors.

An external pullup or pulldown resistor needs to be used in the following situations:

- *Boot and Configuration Pins*: If the pin is both routed out and 3-stated (not driven), an external pullup or pulldown resistor is ***strongly recommended***, even if the IPU or IPD matches the desired value or state.
- *Other Input Pins*: If the IPU or IPD *does not* match the desired value or state, use an external pullup or pulldown resistor to pull the signal to the opposite rail.

For the boot and configuration pins (listed in Table 4-1, *Boot Terminal Functions*), if they are both routed out and 3-stated (not driven), it is ***strongly recommended*** that an external pullup or pulldown resistor be implemented. Although, internal pullup and pulldown resistors exist on these pins and they may match the desired configuration value, providing external connectivity can help ensure that valid logic levels are latched on these device boot and configuration pins. In addition, applying external pullup or pulldown resistors on the boot and configuration pins adds convenience to the user in debugging and flexibility in switching operating modes.

Tips for choosing an external pullup or pulldown resistor:

- Consider the total amount of current that may pass through the pullup or pulldown resistor. Make sure to include the leakage currents of all the devices connected to the net, as well as any internal pullup or pulldown resistors.
- Decide a target value for the net. For a pulldown resistor, this should be below the lowest V_{IL} level of all inputs connected to the net. For a pullup resistor, this should be above the highest V_{IH} level of all inputs on the net. A reasonable choice would be to target the V_{OL} or V_{OH} levels for the logic family of the limiting device; which, by definition, have margin to the V_{IL} and V_{IH} levels.
- Select a pullup or pulldown resistor with the largest possible value; but, which can still ensure that the net will reach the target pulled value when maximum current from all devices on the net is flowing through the resistor. The current to be considered includes leakage current plus, any other internal and external pullup and pulldown resistors on the net.

Copyright © 2010–2015, Texas Instruments Incorporated

- For bidirectional nets, there is an additional consideration which sets a lower limit on the resistance value of the external resistor. Verify that the resistance is small enough that the weakest output buffer can drive the net to the opposite logic level (including margin).
- Remember to include tolerances when selecting the resistor value.
- For pullup resistors, also remember to include tolerances on the DV_{DD} rail.

For most systems, a 1-kΩ resistor can be used to oppose the IPU or IPD while meeting the above criteria. Users should confirm this resistor value is correct for their specific application.

For most systems, a 20-kΩ resistor can be used to compliment the IPU or IPD on the boot and configuration pins while meeting the above criteria. Users should confirm this resistor value is correct for their specific application.

For most systems, a 20-kΩ resistor can also be used as an external pullup or pulldown on the pins that have IPUs or IPDs disabled and require an external pullup or pulldown resistor while still meeting the above criteria. Users should confirm this resistor value is correct for their specific application.

For more detailed information on input current (I_I), and the low-level or high-level input voltages (V_{IL} and V_{IH}), see , *Electrical Characteristics Over Recommended Ranges of Supply Voltage and Operating Temperature*.

For the internal pullup and pulldown resistors for all device pins, see the peripheral-specific or system-specific terminal functions tables in Section 4.2.

6.4 Boot Sequence

The boot sequence is a process by which the device's memory is loaded with program and data sections, and by which some of the device's internal registers are programmed with predetermined values. The boot sequence is started automatically after each device-level global reset. For more details on device-level global resets, see Section 8.2. There are several methods by which the memory and register initialization can take place. Each of these methods is referred to as a boot mode. The boot mode to be used is selected at reset. The device is booted through multiple means—primary bootloaders within internal ROM or EMIF4, and secondary user bootloaders from peripherals or external memories. The maximum size of the boot image is 255KB (ROM uses 1KB internally). Boot modes, pin configurations, and register configurations required for booting the device, are described in the following subsections.

The following boot modes are supported:

- NOR Flash boot (muxed and non-muxed, 8-bit or 16-bit)
- NAND Flash boot (SLC and MLC with BCH ECC, 8-bit or 16-bit)
- SPI boot (EEPROM or Flash, SPI mode 3, 24-bit)
- SD boot (SD cards)
- EMAC boot (TFTP client)
- UART boot (X-modem client)
- PCIe boot (client mode, PCIe 32 and PCIe 64).

The state of the device after boot is determined by sampling the input states of the BTMODE[4:0] pins when device reset ($\overline{POR}$ or $\overline{RESET}$) is deasserted. The sampled values are latched into the CONTROL_STATUS register, which is part of the system configuration (SYSCFG) module.

The BTMODE [4:0] values determine the boot mode order according to Table 6-6. The first boot mode listed for each BTMODE[4:0] configuration is executed as the primary boot mode. If the primary boot mode fails, the second, third, and fourth boot modes are executed, in that order, until a successful boot is completed.

Additional boot configuration pins determine the following system boot settings as shown in Table 4-1:

- GPMC CS0 Default Bus Width
- GPMC Wait Enable

- GPMC Address and Data Multiplexing.

The GPMC CS0 default operation is determined by the CS0BW, CS0WAIT, and CS0MUX[1:0] inputs.

For more detailed information on booting the device, see the *AM389x Sitara ARM Processors Technical Reference Manual* (literature number SPRUGX7).

Copyright © 2010–2015, Texas Instruments Incorporated

Table 6-6. Boot Mode Order

BTMODE[4] = 1 MEMORY BOOTING PREFERRED				BTMODE[4] = 0 PERIPHERAL BOOTING PREFERRED				BTMODE[3:0]
FIRST	SECOND	THIRD	FOURTH	FIRST	SECOND	THIRD	FOURTH	
XIP (1)	UART	EMAC	SD	RESERVED	RESERVED	RESERVED	RESERVED	0000
XIPWAIT (1)	UART	EMAC	SD	UART	XIPWAIT (1)	SD	SPI	0001
NAND	NANDI2C	SPI	UART	UART	SPI	NAND	NANDI2C	0010
NAND	NANDI2C	SD	UART	UART	SPI	XIP (1)	SD	0011
NAND	NANDI2C	SPI	EMAC	EMAC	SPI	NAND	NANDI2C	0100
NANDI2C	SD	EMAC	UART	RESERVED	RESERVED	RESERVED	RESERVED	0101
SPI	SD	UART	EMAC	RESERVED	RESERVED	RESERVED	RESERVED	0110
SD	SPI	UART	EMAC	EMAC	SD	SPI	XIP (1)	0111
SPI	SD	PCIE_32	RESERVED	PCIE_32	RESERVED	RESERVED	RESERVED	1000
SPI	SD	PCIE_64	RESERVED	PCIE_64	RESERVED	RESERVED	RESERVED	1001
RESERVED	RESERVED	RESERVED	RESERVED	RESERVED	RESERVED	RESERVED	RESERVED	1010
RESERVED	RESERVED	RESERVED	RESERVED	RESERVED	RESERVED	RESERVED	RESERVED	1011
RESERVED	RESERVED	RESERVED	RESERVED	RESERVED	RESERVED	RESERVED	RESERVED	1100
RESERVED	RESERVED	RESERVED	RESERVED	RESERVED	RESERVED	RESERVED	RESERVED	1101
RESERVED	RESERVED	RESERVED	RESERVED	RESERVED	RESERVED	RESERVED	RESERVED	1110
GP Fast External Boot	EMAC	UART	PCIE_32	GP Fast External Boot	UART	EMAC	PCIE_64	1111

(1) GPMC CS0 eXecute In Place (XIP) and eXecute In Place with Wait Monitoring (XIPWAIT) boot for NOR. OneNAND, and ROM. For details, see the *AM389x Sitara ARM Processors Technical Reference Manual* (literature number SPRUGX7).

6.4.1 Boot Mode Registers

For details on the boot mode registers, see the *AM389x Sitara ARM Processors Technical Reference Manual* (literature number SPRUGX7).

Table 6-7. Device Boot Registers Summary

HEX ADDRESS	ACRONYM	REGISTER NAME
0x4814 0040	CONTROL_STATUS	Device Status
0x4814 0044	BOOTSTAT	Device Boot Status
0x4814 0048 - 0x4814 007C	-	Reserved

6.5 Pin Multiplexing Control

Device-level pin multiplexing is controlled on a pin-by-pin basis by the MUXMODE bits of the PINCTRL1 - PINCTRL321 registers in the SYSCFG module. The default state for each multiplexed pin is MUXMODE = 0x000.

Pin multiplexing selects which of several peripheral pin functions control the pin's IO buffer output data values.

The input from each pin is routed to all of the peripherals that share the pin, regardless of the MUXMODE setting. For details, see the table below and the MUXED column in the each of the Terminal Functions tables in Section 4.2.

6.5.1 PINCTRLx Register Descriptions

Table 6-8. PINCTRLx Register Definition

Bit	Field	Value	Description
31:5	Reserved		Reserved; Read returns 0
4	PULLTYPESEL		Pad Pullup or Pulldown Type Selection
		0	Pulldown selected
		1	Pullup selected
3	PULLDIS		Pad Pullup or Pulldown Disable
		0	Pullup or Pulldown enabled
		1	Pullup or Pulldown disabled
2:0	MUXMODE		Pad Functional Signal Mux Select

Table 6-9. PINCTRLx Registers

HEX ADDRESS	REGISTER NAME	PULLTYPESEL	PULLDIS	MUXMODE[2:0]			
				000	001	010	011
0x4814 0800	PINCTRL1	0	0				
0x4814 0804	PINCTRL2	0	0				
0x4814 0808	PINCTRL3	0	0				
0x4814 080C	PINCTRL4	0	0				
0x4814 0810	PINCTRL5	0	0				
0x4814 0814	PINCTRL6	0	0		VOUT[1]_C[3]	VIN[1]A_D[9]	
0x4814 0818	PINCTRL7	0	0		VOUT[1]_C[4]	VIN[1]A_D[10]	
0x4814 081C	PINCTRL8	0	0		VOUT[1]_C[5]	VIN[1]A_D[11]	
0x4814 0820	PINCTRL9	0	0		VOUT[1]_C[6]	VIN[1]A_D[12]	
0x4814 0824	PINCTRL10	0	0		VOUT[1]_C[7]	VIN[1]A_D[13]	
0x4814 0828	PINCTRL11	0	0		VIN[1]A_D[14]		
0x4814 082C	PINCTRL12	0	0		VIN[0]A_D[20]	VIN[0]B_DE	
0x4814 0830	PINCTRL13	0	0		VIN[0]A_D[21]	VIN[0]B_FLD	
0x4814 0834	PINCTRL14	0	0		VIN[0]A_D[22]	VIN[0]B_VSYNC	
0x4814 0838	PINCTRL15	0	0		VIN[0]A_D[23]	VIN[0]B_HSYNC	
0x4814 083C	PINCTRL16	0	0		VOUT[1]_Y_YC[6]	VIN[1]A_D[4]	
0x4814 0840	PINCTRL17	0	0		VOUT[1]_Y_YC[7]	VIN[1]A_D[5]	
0x4814 0844	PINCTRL18	0	0		VOUT[1]_Y_YC[8]	VIN[1]A_D[6]	
0x4814 0848	PINCTRL19	0	0		VOUT[1]_Y_YC[9]	VIN[1]A_D[7]	
0x4814 084C	PINCTRL20	0	0		VOUT[1]_C[2]	VIN[1]A_D[8]	
0x4814 0850	PINCTRL21	0	0		VOUT[1]_HSYNC (silicon revision 1.x) DAC_VOUT[1]_HSYNC (silicon revision 2.x)	VIN[1]A_D[15]	
0x4814 0854	PINCTRL22	0	0		VIN[0]A_D[16]	VIN[1]A_HSYNC	VOUT[1]_FLD
0x4814 0858	PINCTRL23	0	0		VIN[0]A_D[17]	VIN[1]A_VSYNC	VOUT[1]_VSYNC (silicon revision 1.x) DAC_VOUT[1]_VSYNC (silicon revision 2.x)
0x4814 085C	PINCTRL24	0	0		VIN[0]A_D[18]	VIN[1]A_FLD	VOUT[1]_C[8]
0x4814 0860	PINCTRL25	0	0		VIN[0]A_D[19]	VIN[1]A_DE	VOUT[1]_C[9]
0x4814 0864	PINCTRL26	0	0		VOUT[0]_R_CR[0]	VOUT[1]_C[8]	VOUT[1]_CLK
0x4814 0868	PINCTRL27	0	0		VOUT[0]_B_CB_C[0]	VOUT[1]_C[9]	VIN[1]B_HSYNC_DE
0x4814 086C	PINCTRL28	0	0		VOUT[0]_B_CB_C[1]	VOUT[1]_HSYNC (silicon revision 1.x) DAC_VOUT[1]_HSYNC (silicon revision 2.x)	VOUT[1]_AVID
0x4814 0870	PINCTRL29	0	0		VOUT[0]_G_Y_YC[0]	VOUT[1]_VSYNC (silicon revision 1.x) DAC_VOUT[1]_VSYNC (silicon revision 2.x)	VIN[1]B_VSYNC
0x4814 0874	PINCTRL30	0	0		VOUT[0]_G_Y_YC[1]	VOUT[1]_FLD	VIN[1]B_FLD

Copyright © 2010–2015, Texas Instruments Incorporated

Table 6-9. PINCTRLx Registers (continued)

HEX ADDRESS	REGISTER NAME	PULLTYPESEL	PULLDIS	MUXMODE[2:0]			
				000	001	010	011
0x4814 0878	PINCTRL31	0	0		VOUT[1]_AVID	VIN[1]B_CLK	
0x4814 087C	PINCTRL32	0	0		VIN[0]A_HSYNC		
0x4814 0880	PINCTRL33	0	0		VIN[0]A_VSYNC		
0x4814 0884	PINCTRL34	0	0		VIN[0]A_FLD		
0x4814 0888	PINCTRL35	0	0		VIN[0]A_DE		
0x4814 088C	PINCTRL36	0	0		VOUT[0]_HSYNC		
0x4814 0890	PINCTRL37	0	0		VOUT[0]_VSYNC		
0x4814 0894	PINCTRL38	0	0		VOUT[0]_FLD (silicon revision 1.x)		
					DAC_VSYNC_VOUT[0]_FLD (silicon revision 2.x)		
0x4814 0898	PINCTRL39	0	0		VOUT[0]_AVID (silicon revision 1.x)		
					DAC_HSYNC_VOUT[0]_AVID (silicon revision 2.x)		
0x4814 089C	PINCTRL40	0	0		VOUT[0]_R_CR[1]		
0x4814 08A0	PINCTRL41	0	1				
0x4814 08A4	PINCTRL42	0	1				
0x4814 08A8	PINCTRL43	0	1				
0x4814 08AC	PINCTRL44	0	1				
0x4814 08B0	PINCTRL45	0	1				
0x4814 08B4	PINCTRL46	0	1		VOUT[1]_CLK	VIN[1]A_CLK	
0x4814 08B8	PINCTRL47	0	1		VOUT[1]_Y_YC[2]	VIN[1]A_D[0]	
0x4814 08BC	PINCTRL48	0	1		VOUT[1]_Y_YC[3]	VIN[1]A_D[1]	
0x4814 08C0	PINCTRL49	0	1		VOUT[1]_Y_YC[4]	VIN[1]A_D[2]	
0x4814 08C4	PINCTRL50	0	1		VOUT[1]_Y_YC[5]	VIN[1]A_D[3]	
0x4814 08C8	PINCTRL51	0	0		EMAC[1]_RXCLK		
0x4814 08CC	PINCTRL52	0	0		EMAC[1]_RXD[0]		
0x4814 08D0	PINCTRL53	0	0		EMAC[1]_RXD[1]		
0x4814 08D4	PINCTRL54	0	0		EMAC[1]_RXD[2]		
0x4814 08D8	PINCTRL55	0	0		EMAC[1]_RXD[3]		
0x4814 08DC	PINCTRL56	0	0		EMAC[1]_RXD[4]		
0x4814 08E0	PINCTRL57	0	0		EMAC[1]_RXD[5]		
0x4814 08E4	PINCTRL58	0	0		EMAC[1]_RXD[6]		
0x4814 08E8	PINCTRL59	0	0		EMAC[1]_RXD[7]		
0x4814 08EC	PINCTRL60	0	0		EMAC[1]_RXDV		
0x4814 08F0	PINCTRL61	0	1		EMAC[1]_GMTCLK		
0x4814 08F4	PINCTRL62	0	1		EMAC[1]_TXD[0]		
0x4814 08F8	PINCTRL63	0	1		EMAC[1]_TXD[1]		
0x4814 08FC	PINCTRL64	0	1		EMAC[1]_TXD[2]		
0x4814 0900	PINCTRL65	0	1		EMAC[1]_TXD[3]		
0x4814 0904	PINCTRL66	0	1		EMAC[1]_TXD[4]		
0x4814 0908	PINCTRL67	0	1		EMAC[1]_TXD[5]		
0x4814 090C	PINCTRL68	0	1		EMAC[1]_TXD[6]		
0x4814 0910	PINCTRL69	0	1		EMAC[1]_TXD[7]		
0x4814 0914	PINCTRL70	0	1		EMAC[1]_TXEN		
0x4814 0918	PINCTRL71	0	1		EMAC[1]_TXCLK		
0x4814 091C	PINCTRL72	0	1		EMAC[1]_COL		
0x4814 0920	PINCTRL73	0	0		EMAC[1]_CRS		
0x4814 0924	PINCTRL74	0	1		EMAC[1]_RXER		
0x4814 0928	PINCTRL75	0	0				
0x4814 092C	PINCTRL76	0	0				
0x4814 0930	PINCTRL77	0	0				
0x4814 0934	PINCTRL78	0	0				
0x4814 0938	PINCTRL79	0	0				

Copyright © 2010–2015, Texas Instruments Incorporated

Table 6-9. PINCTRLx Registers (continued)

HEX ADDRESS	REGISTER NAME	PULLTYPESEL	PULLDIS	MUXMODE[2:0]			
				000	001	010	011
0x4814 093C	PINCTRL80	0	1				
0x4814 0940	PINCTRL81	0	1				
0x4814 0944	PINCTRL82	0	1				
0x4814 0948	PINCTRL83	0	0	VIN[0]A_CLK			
0x4814 094C	PINCTRL84	0	0	VIN[0]B_CLK			
0x4814 0950	PINCTRL85	0	0	VIN[0]A_D[0]			
0x4814 0954	PINCTRL86	0	0	VIN[0]A_D[1]			
0x4814 0958	PINCTRL87	0	0	VIN[0]A_D[2]			
0x4814 095C	PINCTRL88	0	0	VIN[0]A_D[3]			
0x4814 0960	PINCTRL89	0	0	VIN[0]A_D[4]			
0x4814 0964	PINCTRL90	0	0	VIN[0]A_D[5]			
0x4814 0968	PINCTRL91	0	0	VIN[0]A_D[6]			
0x4814 096C	PINCTRL92	0	0	VIN[0]A_D[7]			
0x4814 0970	PINCTRL93	0	0	VIN[0]A_D[8]			
0x4814 0974	PINCTRL94	0	0	VIN[0]A_D[9]			
0x4814 0978	PINCTRL95	0	0	VIN[0]A_D[10]			
0x4814 097C	PINCTRL96	0	0	VIN[0]A_D[11]			
0x4814 0980	PINCTRL97	0	0	VIN[0]A_D[12]			
0x4814 0984	PINCTRL98	0	0	VIN[0]A_D[13]			
0x4814 0988	PINCTRL99	0	0	VIN[0]A_D[14]			
0x4814 098C	PINCTRL100	0	0	VIN[0]A_D[15]			
0x4814 0990	PINCTRL101	0	1	VOUT[0]_CLK			
0x4814 0994	PINCTRL102	0	1	VOUT[0]_G_Y_YC[2]			
0x4814 0998	PINCTRL103	0	1	VOUT[0]_G_Y_YC[3]			
0x4814 099C	PINCTRL104	0	1	VOUT[0]_G_Y_YC[4]			
0x4814 09A0	PINCTRL105	0	1	VOUT[0]_G_Y_YC[5]			
0x4814 09A4	PINCTRL106	0	1	VOUT[0]_G_Y_YC[6]			
0x4814 09A8	PINCTRL107	0	1	VOUT[0]_G_Y_YC[7]			
0x4814 09AC	PINCTRL108	0	1	VOUT[0]_G_Y_YC[8]			
0x4814 09B0	PINCTRL109	0	1	VOUT[0]_G_Y_YC[9]			
0x4814 09B4	PINCTRL110	0	1	VOUT[0]_B_CB_C[2]			
0x4814 09B8	PINCTRL111	0	1	VOUT[0]_B_CB_C[3]			
0x4814 09BC	PINCTRL112	0	1	VOUT[0]_B_CB_C[4]			
0x4814 09C0	PINCTRL113	0	1	VOUT[0]_B_CB_C[5]			
0x4814 09C4	PINCTRL114	0	1	VOUT[0]_B_CB_C[6]			
0x4814 09C8	PINCTRL115	0	1	VOUT[0]_B_CB_C[7]			
0x4814 09CC	PINCTRL116	0	1	VOUT[0]_B_CB_C[8]			
0x4814 09D0	PINCTRL117	0	1	VOUT[0]_B_CB_C[9]			
0x4814 09D4	PINCTRL118	0	1	VOUT[0]_R_CR[2]	VOUT[0]_HSYNC	VOUT[1]_Y_YC[2]	
0x4814 09D8	PINCTRL119	0	1	VOUT[0]_R_CR[3]	VOUT[0]_VSYNC	VOUT[1]_Y_YC[3]	
0x4814 09DC	PINCTRL120	0	1	VOUT[0]_R_CR[4]	VOUT[0]_FLD	VOUT[1]_Y_YC[4]	
0x4814 09E0	PINCTRL121	0	1	VOUT[0]_R_CR[5]	VOUT[0]_AVID	VOUT[1]_Y_YC[5]	
0x4814 09E4	PINCTRL122	0	1	VOUT[0]_R_CR[6]	VOUT[0]_G_Y_YC[0]	VOUT[1]_Y_YC[6]	
0x4814 09E8	PINCTRL123	0	1	VOUT[0]_R_CR[7]	VOUT[0]_G_Y_YC[1]	VOUT[1]_Y_YC[7]	
0x4814 09EC	PINCTRL124	0	1	VOUT[0]_R_CR[8]	VOUT[0]_B_CB_C[0]	VOUT[1]_Y_YC[8]	
0x4814 09F0	PINCTRL125	0	1	VOUT[0]_R_CR[9]	VOUT[0]_B_CB_C[1]	VOUT[1]_Y_YC[9]	
0x4814 09F4	PINCTRL126	0	0	MCA[0]_ACLKR			
0x4814 09F8	PINCTRL127	0	0	MCA[0]_AHCLKR			
0x4814 09FC	PINCTRL128	0	0	MCA[0]_AFSR			
0x4814 0A00	PINCTRL129	0	0	MCA[0]_ACLKX			
0x4814 0A04	PINCTRL130	0	0	MCA[0]_ACLKHX			
0x4814 0A08	PINCTRL131	0	0	MCA[0]_AFSX			
0x4814 0A0C	PINCTRL132	0	0	MCA[0]_AMUTE			
0x4814 0A10	PINCTRL133	0	0	MCA[0]_AXR[0]			
0x4814 0A14	PINCTRL134	0	0	MCA[0]_AXR[1]			

Copyright © 2010–2015, Texas Instruments Incorporated

Table 6-9. PINCTRLx Registers (continued)

HEX ADDRESS	REGISTER NAME	PULLTYPESEL	PULLDIS	MUXMODE[2:0]			
				000	001	010	011
0x4814 0A18	PINCTRL135	0	0	MCA[0]_AXR[2]	MCB_FSX		
0x4814 0A1C	PINCTRL136	0	0	MCA[0]_AXR[3]	MCB_FSR		
0x4814 0A20	PINCTRL137	0	0	MCA[0]_AXR[4]	MCB_DX		
0x4814 0A24	PINCTRL138	0	0	MCA[0]_AXR[5]	MCB_DR		
0x4814 0A28	PINCTRL139	0	0	MCA[1]_ACLKR			
0x4814 0A2C	PINCTRL140	0	0	MCA[1]_AHCLKR			
0x4814 0A30	PINCTRL141	0	0	MCA[1]_AFSR			
0x4814 0A34	PINCTRL142	0	0	MCA[1]_ACLKX			
0x4814 0A38	PINCTRL143	0	0	MCA[1]_ACLKHX			
0x4814 0A3C	PINCTRL144	0	0	MCA[1]_AFSX			
0x4814 0A40	PINCTRL145	0	0	MCA[1]_AMUTE			
0x4814 0A44	PINCTRL146	0	0	MCA[1]_AXR[0]			
0x4814 0A48	PINCTRL147	0	0	MCA[1]_AXR[1]			
0x4814 0A4C	PINCTRL148	0	0	MCA[2]_ACLKR	MCB_CLKR	MCB_DR	
0x4814 0A50	PINCTRL149	0	0	MCA[2]_AHCLKR	MCB_CLKS		
0x4814 0A54	PINCTRL150	0	0	MCA[2]_AFSR	MCB_CLKX	MCB_FSR	
0x4814 0A58	PINCTRL151	0	0	MCA[2]_ACLKX	MCB_CLKX		
0x4814 0A5C	PINCTRL152	0	0	MCA[2]_ACLKHX	MCB_CLKR		
0x4814 0A60	PINCTRL153	0	0	MCA[2]_AFSX	MCB_CLKS	MCB_FSX	
0x4814 0A64	PINCTRL154	0	0	MCA[2]_AMUTE			
0x4814 0A68	PINCTRL155	0	0	MCA[2]_AXR[0]			
0x4814 0A6C	PINCTRL156	0	0	MCA[2]_AXR[1]	MCB_DX		
0x4814 0A70	PINCTRL157	0	1	SD_POW	GPMC_A[14]	GP1[0]	
0x4814 0A74	PINCTRL158	0	1	SD_CLK	GPMC_A[13]	GP1[1]	
0x4814 0A78	PINCTRL159	0	1	SD_CMD	GPMC_A[21]	GP1[2]	
0x4814 0A7C	PINCTRL160	0	0	SD_DAT[0]	GPMC_A[20]	GP1[3]	
0x4814 0A80	PINCTRL161	0	0	SD_DAT[1]_SDIRQ	GPMC_A[19]	GP1[4]	
0x4814 0A84	PINCTRL162	0	0	SD_DAT[2]_SDRW	GPMC_A[18]	GP1[5]	
0x4814 0A88	PINCTRL163	0	0	SD_DAT[3]	GPMC_A[17]	GP1[6]	
0x4814 0A8C	PINCTRL164	0	0	SD_SDCD	GPMC_A[16]	GP1[7]	
0x4814 0A90	PINCTRL165	0	0	SD_SDWP	GPMC_A[15]	GP1[8]	
0x4814 0A94	PINCTRL166	0	0	SPI_SCLK			
0x4814 0A98	PINCTRL167	1	0	SPI_SCS[0]			
0x4814 0A9C	PINCTRL168	1	0	SPI_SCS[1]	GPMC_A[23]		
0x4814 0AA0	PINCTRL169	1	0	SPI_SCS[2]	GPMC_A[22]		
0x4814 0AA4	PINCTRL170	1	0	SPI_SCS[3]	GPMC_A[21]	GP1[22]	
0x4814 0AA8	PINCTRL171	0	0	SPI_D[0]			
0x4814 0AAC	PINCTRL172	0	0	SPI_D[1]			
0x4814 0AB0	PINCTRL173	0	0	UART0_RXD			
0x4814 0AB4	PINCTRL174	0	1	UART0_TXD			
0x4814 0AB8	PINCTRL175	1	1	$\overline{\text{UART0_RTS}}$	GP1[27]		
0x4814 0ABC	PINCTRL176	1	0	$\overline{\text{UART0_CTS}}$	GP1[28]		
0x4814 0AC0	PINCTRL177	1	1	$\overline{\text{UART0_DTR}}$	GPMC_A[20]	GPMC_A[12]	GP1[16]
0x4814 0AC4	PINCTRL178	1	0	$\overline{\text{UART0_DSR}}$	GPMC_A[19]	GPMC_A[24]	GP1[17]
0x4814 0AC8	PINCTRL179	1	0	$\overline{\text{UART0_DCD}}$	GPMC_A[18]	GPMC_A[23]	GP1[18]
0x4814 0ACC	PINCTRL180	1	0	UART0_RIN	GPMC_A[17]	GPMC_A[22]	GP1[19]
0x4814 0AD0	PINCTRL181	0	0	UART1_RXD	GPMC_A[26]	GPMC_A[20]	
0x4814 0AD4	PINCTRL182	0	1	UART1_TXD	GPMC_A[25]	GPMC_A[19]	
0x4814 0AD8	PINCTRL183	1	1	$\overline{\text{UART1_RTS}}$	GPMC_A[14]	GPMC_A[18]	GP1[25]
0x4814 0ADC	PINCTRL184	1	0	$\overline{\text{UART1_CTS}}$	GPMC_A[13]	GPMC_A[17]	GP1[26]
0x4814 0AE0	PINCTRL185	0	0	UART2_RXD			
0x4814 0AE4	PINCTRL186	0	0	UART2_TXD			
0x4814 0AE8	PINCTRL187	1	1	$\overline{\text{UART2_RTS}}$	GPMC_A[15]	GPMC_A[26]	GP1[23]
0x4814 0AEC	PINCTRL188	1	0	$\overline{\text{UART2_CTS}}$	GPMC_A[16]	GPMC_A[25]	GP1[24]
0x4814 0AF0	PINCTRL189	0	0		GPMC_A[27]	GP1[9]	

Copyright © 2010–2015, Texas Instruments Incorporated

Table 6-9. PINCTRLx Registers (continued)

HEX ADDRESS	REGISTER NAME	PULLTYPESEL	PULLDIS	MUXMODE[2:0]			
				000	001	010	011
0x4814 0AF4	PINCTRL190	0	1		GPMC_A[22]	GP1[10]	
0x4814 0AF8	PINCTRL191	0	1		GPMC_A[26]	GP1[11]	
0x4814 0AFC	PINCTRL192	0	0		GPMC_A[25]	GP1[12]	
0x4814 0B00	PINCTRL193	0	1		GP1[13]		
0x4814 0B04	PINCTRL194	0	1		GPMC_A[23]	GP1[14]	
0x4814 0B08	PINCTRL195	0	1		GPMC_A[24]	GP1[15]	
0x4814 0B0C	PINCTRL196	0	0		GPMC_A[16]	GP0[21]	
0x4814 0B10	PINCTRL197	0	1		GPMC_A[15]	GP0[22]	
0x4814 0B14	PINCTRL198	0	1		GPMC_A[14]	GP0[23]	
0x4814 0B18	PINCTRL199	0	0		GPMC_A[13]	GP0[24]	
0x4814 0B1C	PINCTRL200	0	1		GP0[25]		
0x4814 0B20	PINCTRL201	0	1		GPMC_A[21]	GP0[26]	
0x4814 0B24	PINCTRL202	0	1		GPMC_A[12]	GP0[27]	
0x4814 0B28	PINCTRL203	0	0	TIM4_OUT	GP0[28]		
0x4814 0B2C	PINCTRL204	0	0	TIM5_OUT	GP0[29]		
0x4814 0B30	PINCTRL205	0	0	TIM6_OUT	GPMC_A[24]	GP0[30]	
0x4814 0B34	PINCTRL206	0	0	TIM7_OUT	GPMC_A[12]	GP0[31]	
0x4814 0B38	PINCTRL207	1	0	$\overline{\text{GPMC_CS[0]}}$			
0x4814 0B3C	PINCTRL208	1	0	$\overline{\text{GPMC_CS[1]}}$			
0x4814 0B40	PINCTRL209	1	0	$\overline{\text{GPMC_CS[2]}}$			
0x4814 0B44	PINCTRL210	1	0	$\overline{\text{GPMC_CS[3]}}$			
0x4814 0B48	PINCTRL211	1	0	$\overline{\text{GPMC_CS[4]}}$	GP1[21]		
0x4814 0B4C	PINCTRL212	1	0	$\overline{\text{GPMC_CS[5]}}$	GPMC_A[12]		
0x4814 0B50	PINCTRL213	1	0	GPMC_$\overline{\text{WE}}$			
0x4814 0B54	PINCTRL214	1	1	$\overline{\text{GPMC_OE_RE}}$			
0x4814 0B58	PINCTRL215	0	1	GPMC_$\overline{\text{BE0}}$_CLE			
0x4814 0B5C	PINCTRL216	0	1	$\overline{\text{GPMC_BE1}}$			
0x4814 0B60	PINCTRL217	0	1	GPMC_$\overline{\text{ADV}}$_ALE			
0x4814 0B64	PINCTRL218	0	1	GPMC_DIR	GP1[20]		
0x4814 0B68	PINCTRL219	0	0	$\overline{\text{GPMC_WP}}$			
0x4814 0B6C	PINCTRL220	0	0	GPMC_WAIT			
0x4814 0B70	PINCTRL221	0	1	GPMC_A[0]	GP0[8]		
0x4814 0B74	PINCTRL222	0	1	GPMC_A[1]	GP0[9]		
0x4814 0B78	PINCTRL223	0	1	GPMC_A[2]	GP0[10]		
0x4814 0B7C	PINCTRL224	0	1	GPMC_A[3]	GP0[11]		
0x4814 0B80	PINCTRL225	0	1	GPMC_A[4]	GP0[12]		
0x4814 0B84	PINCTRL226	0	1	GPMC_A[5]	GP0[13]		
0x4814 0B88	PINCTRL227	0	1	GPMC_A[6]	GP0[14]		
0x4814 0B8C	PINCTRL228	0	1	GPMC_A[7]	GP0[15]		
0x4814 0B90	PINCTRL229	0	1	GPMC_A[8]	GP0[16]		
0x4814 0B94	PINCTRL230	0	1	GPMC_A[9]	GP0[17]		
0x4814 0B98	PINCTRL231	0	1	GPMC_A[10]	GP0[18]		
0x4814 0B9C	PINCTRL232	0	1	GPMC_A[11]	GP0[19]		
0x4814 0BA0	PINCTRL233	0	1	GPMC_A[27]	GP0[20]		
0x4814 0BA4	PINCTRL234	0	0	GPMC_D[0]			
0x4814 0BA8	PINCTRL235	0	0	GPMC_D[1]			
0x4814 0BAC	PINCTRL236	0	0	GPMC_D[2]			
0x4814 0BB0	PINCTRL237	0	0	GPMC_D[3]			
0x4814 0BB4	PINCTRL238	0	0	GPMC_D[4]			
0x4814 0BB8	PINCTRL239	0	0	GPMC_D[5]			
0x4814 0BBC	PINCTRL240	0	0	GPMC_D[6]			
0x4814 0BC0	PINCTRL241	0	0	GPMC_D[7]			
0x4814 0BC4	PINCTRL242	0	0	GPMC_D[8]			
0x4814 0BC8	PINCTRL243	0	0	GPMC_D[9]			
0x4814 0BCC	PINCTRL244	0	0	GPMC_D[10]			

Copyright © 2010–2015, Texas Instruments Incorporated

Table 6-9. PINCTRLx Registers (continued)

HEX ADDRESS	REGISTER NAME	PULLTYPESEL	PULLDIS	MUXMODE[2:0]			
				000	001	010	011
0x4814 0BD0	PINCTRL245	0	0	GPMC_D[11]			
0x4814 0BD4	PINCTRL246	0	0	GPMC_D[12]			
0x4814 0BD8	PINCTRL247	0	0	GPMC_D[13]			
0x4814 0BDC	PINCTRL248	0	0	GPMC_D[14]			
0x4814 0BE0	PINCTRL249	0	0	GPMC_D[15]			
0x4814 0BE4	PINCTRL250	0	1	GPMC_CLK	GP1[29]		
0x4814 0BE8	PINCTRL251	0	0	EMAC[0]_COL			
0x4814 0BEC	PINCTRL252	0	0	EMAC[0]_CRS			
0x4814 0BF0	PINCTRL253	0	1	EMAC[0]_GMTCLK			
0x4814 0BF4	PINCTRL254	1	0	EMAC[0]_RXCLK			
0x4814 0BF8	PINCTRL255	1	0	EMAC[0]_RXD[0]			
0x4814 0BFC	PINCTRL256	1	0	EMAC[0]_RXD[1]			
0x4814 0C00	PINCTRL257	1	0	EMAC[0]_RXD[2]			
0x4814 0C04	PINCTRL258	1	0	EMAC[0]_RXD[3]			
0x4814 0C08	PINCTRL259	1	0	EMAC[0]_RXD[4]			
0x4814 0C0C	PINCTRL260	1	0	EMAC[0]_RXD[5]			
0x4814 0C10	PINCTRL261	1	0	EMAC[0]_RXD[6]			
0x4814 0C14	PINCTRL262	1	0	EMAC[0]_RXD[7]			
0x4814 0C18	PINCTRL263	1	0	EMAC[0]_RXDV			
0x4814 0C1C	PINCTRL264	1	0	EMAC[0]_RXER			
0x4814 0C20	PINCTRL265	0	1	EMAC[0]_TXCLK			
0x4814 0C24	PINCTRL266	0	1	EMAC[0]_TXD[0]			
0x4814 0C28	PINCTRL267	0	1	EMAC[0]_TXD[1]			
0x4814 0C2C	PINCTRL268	0	1	EMAC[0]_TXD[2]			
0x4814 0C30	PINCTRL269	0	1	EMAC[0]_TXD[3]			
0x4814 0C34	PINCTRL270	0	1	EMAC[0]_TXD[4]			
0x4814 0C38	PINCTRL271	0	1	EMAC[0]_TXD[5]			
0x4814 0C3C	PINCTRL272	0	1	EMAC[0]_TXD[6]			
0x4814 0C40	PINCTRL273	0	1	EMAC[0]_TXD[7]			
0x4814 0C44	PINCTRL274	0	1	EMAC[0]_TXEN			
0x4814 0C48	PINCTRL275	1	0	MDIO_MCLK			
0x4814 0C4C	PINCTRL276	1	0	MDIO_MDIO			
0x4814 0C50	PINCTRL277	1	0				
0x4814 0C54	PINCTRL278	1	0				
0x4814 0C58	PINCTRL279	0	1				
0x4814 0C5C	PINCTRL280	0	1				
0x4814 0C60	PINCTRL281	0	1				
0x4814 0C64	PINCTRL282	0	1				
0x4814 0C68	PINCTRL283	0	0				
0x4814 0C6C	PINCTRL284	0	0				
0x4814 0C70	PINCTRL285	0	0				
0x4814 0C74	PINCTRL286	0	0				
0x4814 0C78	PINCTRL287	1	1	I2C[0]_SCL			
0x4814 0C7C	PINCTRL288	1	1	I2C[0]_SDA			
0x4814 0C80	PINCTRL289	1	1	I2C[1]_SCL			
0x4814 0C84	PINCTRL290	1	1	I2C[1]_SDA			
0x4814 0C88	PINCTRL291	0	0	GP0[0]			
0x4814 0C8C	PINCTRL292	0	0	GP0[1]			
0x4814 0C90	PINCTRL293	0	0	GP0[2]			
0x4814 0C94	PINCTRL294	0	0	GP0[3]	TCLKIN		
0x4814 0C98	PINCTRL295	0	0	GP0[4]			
0x4814 0C9C	PINCTRL296	0	0	GP0[5]	MCA[2]_AMUTEIN	GPMC_A[24]	
0x4814 0CA0	PINCTRL297	0	0	GP0[6]	MCA[1]_AMUTEIN	GPMC_A[23]	
0x4814 0CA4	PINCTRL298	0	0	GP0[7]	MCA[0]_AMUTEIN		

Copyright © 2010–2015, Texas Instruments Incorporated

Table 6-9. PINCTRLx Registers (continued)

HEX ADDRESS	REGISTER NAME	PULLTYPESEL	PULLDIS	MUXMODE[2:0]			
				000	001	010	011
0x4814 0CA8	PINCTRL299	0	0	GP1[30]	SATA_ACT0_LED (silicon revision 1.x) SATA_ACT1_LED (silicon revision 2.x)		
0x4814 0CAC	PINCTRL300	0	0	GP1[31]	SATA_ACT1_LED (silicon revision 1.x) SATA_ACT0_LED (silicon revision 2.x)		
0x4814 0CB0	PINCTRL301	0	1	HDMI_SCL			
0x4814 0CB4	PINCTRL302	0	1	HDMI_SDA			
0x4814 0CB8	PINCTRL303	1	0	HDMI_CEC			
0x4814 0CBC	PINCTRL304	0	0	HDMI_HPDET			
0x4814 0CC0	PINCTRL305	1	0	TCLK			
0x4814 0CC4	PINCTRL306	0	1	RTCK			
0x4814 0CC8	PINCTRL307	1	0	TDI			
0x4814 0CCC	PINCTRL308	0	1	TDO			
0x4814 0CD0	PINCTRL309	1	0	TMS			
0x4814 0CD4	PINCTRL310	0	0	$\overline{\text{TRST}}$			
0x4814 0CD8	PINCTRL311	1	0	EMU0			
0x4814 0CDC	PINCTRL312	1	0	EMU1			
0x4814 0CE0	PINCTRL313	1	0	EMU2			
0x4814 0CE4	PINCTRL314	1	0	EMU3			
0x4814 0CE8	PINCTRL315	1	0	EMU4			
0x4814 0CEC	PINCTRL316	1	0	$\overline{\text{RESET}}$			
0x4814 0CF0	PINCTRL317	1	0	$\overline{\text{NMI}}$			
0x4814 0CF4	PINCTRL318	1	0	$\overline{\text{RSTOUT}}$			
0x4814 0CF8	PINCTRL319	1	0	WD_OUT			
0x4814 0CFC	PINCTRL320	0	1	CLKOUT			
0x4814 0D00	PINCTRL321	0	0	CLKIN32			
0x4814 0D04	PINCTRL322	0	0	USB0_DRVVBUS			
0x4814 0D08	PINCTRL323	0	0	USB1_DRVVBUS			
0x4814 0D0C - 0x4814 0FFF	Reserved						

6.6 How to Handle Unused Pins

When device signal pins are unused in the system, they can be left unconnected unless otherwise instructed in the Terminal Functions tables. For unused input pins, the internal pull resistor should be enabled, or an external pull resistor should be used, to prevent floating inputs. All supply pins must always be connected to the correct voltage, even when their associated signal pins are unused, as instructed in the Terminal Functions tables in Section 4.2.

Copyright © 2010–2015, Texas Instruments Incorporated

7 System Interconnect

The L3 interconnect allows the sharing of resources, such as peripherals and external or on-chip memories, between all the initiators of the platform. The L4 interconnects control access to the peripherals.

Transfers between initiators and targets across the platform are physically conditioned by the chip interconnect.

7.1 L3 Interconnect

The L3 topology is driven by performance requirements, bus types, and clocking structure. Figure 7-1 shows the interconnect of the device and the main modules and subsystems in the platform. Arrows indicate the master-and-slave relationship, not data flow. Master-and-slave connectivity is shown in Table 7-1.

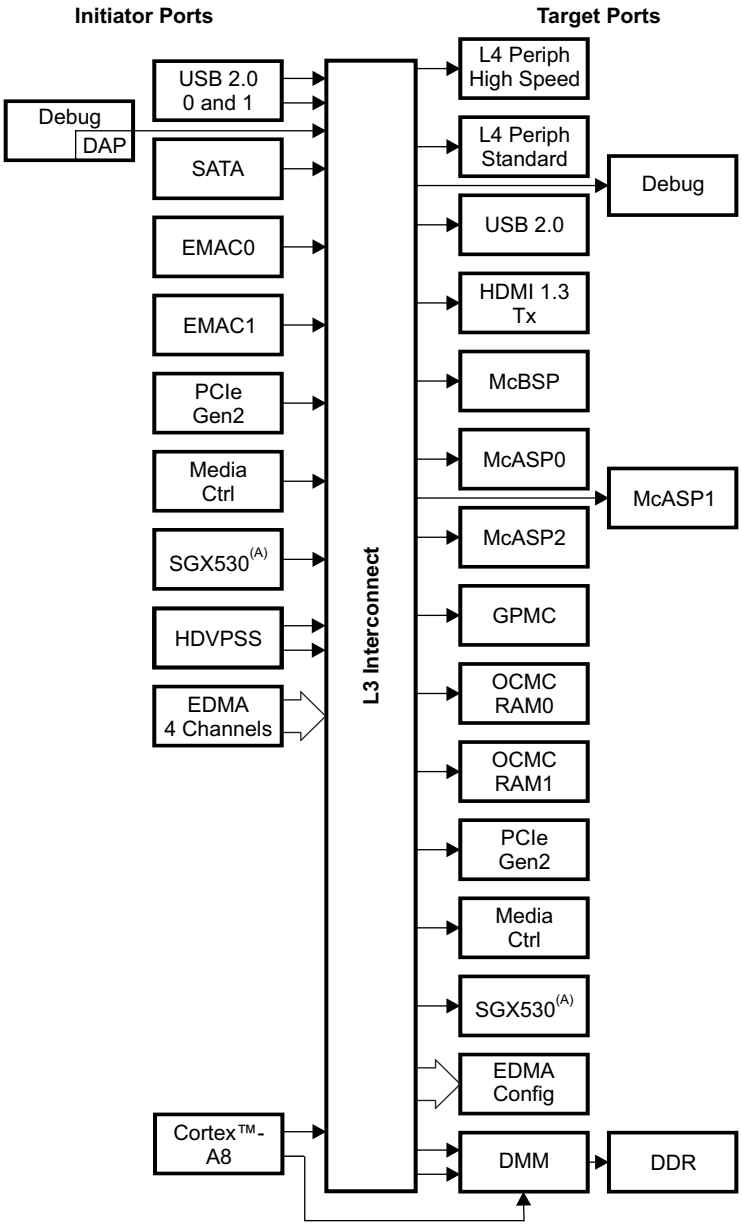

A. SGX530 is available only on the AM3894 device.

Figure 7-1. Interconnect Overview

Copyright © 2010–2015, Texas Instruments Incorporated

Table 7-1. L3 Master-and-Slave Connectivity(1)(2)

MASTERS	SLAVES																
	DMM TILER0	DMM TILER1	DMM ELLA	GPMC	SGX530	PCIe GEN2 SLAVE	McASPs	McBSP	HDMI 1.3 TX AUDIO	L4 HS PERIPH PORT 0	L4 HS PERIPH PORT 1	L4 STD PERIPH PORT 0	L4 STD PERIPH PORT 1	EDMA TPTC0 - 3 CFG	EDMA TPCC	OCMC RAM0 AND RAM1	USB2.0 CFG
ARM Cortex-A8 M1 (128-bit)			X														
ARM Cortex-A8 M2 (64-bit)		X		X	X	X	X	X	X	X		X		X	X	X	X
HDVPSS Mstr0	X															X	
HDVPSS Mstr1		X														X	
SGX530 BIF		X															
SATA	X															X	
EMAC0 Rx and Tx	X															X	
EMAC1 Rx and Tx	X															X	
USB2.0 DMA	X																
USB2.0 Queue Mgr	X															X	
PCIe Gen2	X			X												X	
EDMA TPTC0		X		X		X	X	X	X		X		X		X	X	
EDMA TPTC1	X			X		X	X	X	X	X		X			X	X	
EDMA TPTC2		X		X		X	X	X	X		X		X		X	X	
EDMA TPTC3	X			X		X	X	X	X	X		X			X	X	

(1) X = Connection exists.
(2) SGX530 is available only on the AM3894 device.

7.2 L4 Interconnect

The L4 interconnect is a non-blocking peripheral interconnect that provides low-latency access to a large number of low-bandwidth, physically-dispersed target cores. The L4 can handle incoming traffic from up to four initiators and can distribute those communication requests to and collect related responses from up to 63 targets.

The device provides three interfaces with L3 interconnect for high-speed peripheral and standard peripheral. Figure 7-2 and Table 7-2 show the L4 bus architecture and memory-mapped peripherals.

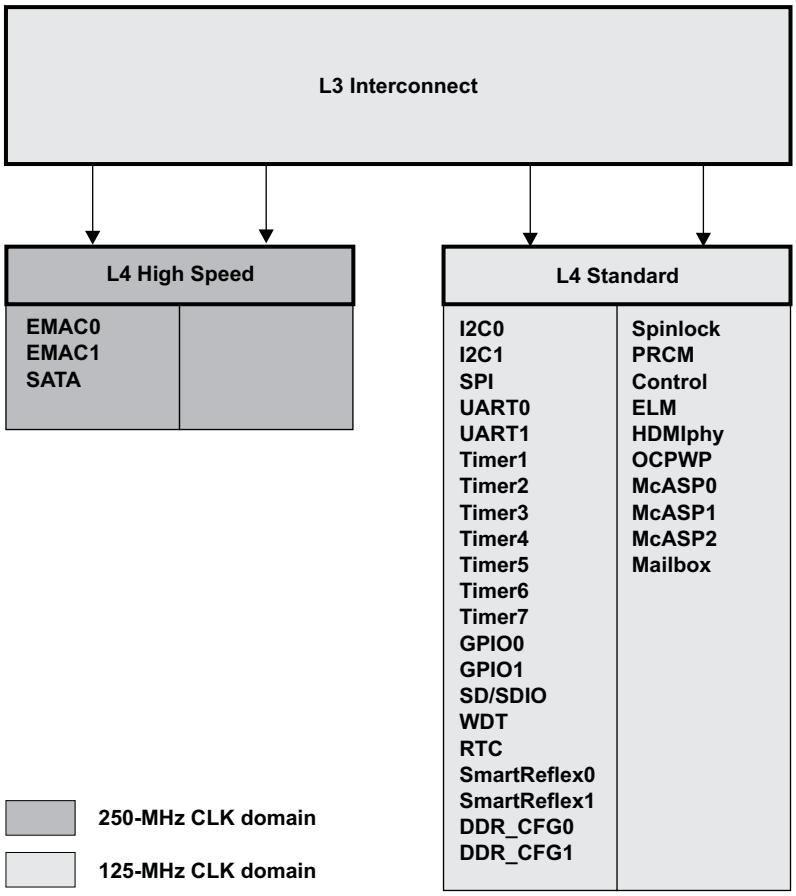

A. SGX530 is available only on the AM3894 device.

Figure 7-2. L4 Architecture

Copyright © 2010–2015, Texas Instruments Incorporated

Table 7-2. L4 Peripheral Connectivity[(1)]

L4 PERIPHERALS	MASTERS				
	Cortex-A8 M2 (64-bit)	EDMA TPTC0	EDMA TPTC1	EDMA TPTC2	EDMA TPTC3
L4 High-Speed Peripherals Port0 and Port1					
EMAC0	Port0	Port1	Port0	Port1	Port0
EMAC1	Port0	Port1	Port0	Port1	Port0
SATA	Port0	Port1	Port0	Port1	Port0
L4 Standard-Speed Peripherals Port0 and Port1					
I2C0	Port0	Port1	Port0	Port1	Port0
I2C1	Port0	Port1	Port0	Port1	Port0
SPI	Port0	Port1	Port0	Port1	Port0
UART0	Port0	Port1	Port0	Port1	Port0
UART1	Port0	Port1	Port0	Port1	Port0
Timer1	Port0	Port1	Port0	Port1	Port0
Timer2	Port0	Port1	Port0	Port1	Port0
Timer3	Port0	Port1	Port0	Port1	Port0
Timer4	Port0	Port1	Port0	Port1	Port0
Timer5	Port0	Port1	Port0	Port1	Port0
Timer6	Port0	Port1	Port0	Port1	Port0
Timer7	Port0	Port1	Port0	Port1	Port0
GPIO0	Port0	Port1	Port0	Port1	Port0
GPIO1	Port0	Port1	Port0	Port1	Port0
SD and SDIO	Port0	Port1	Port0	Port1	Port0
WDT	Port0	Port1	Port0	Port1	Port0
RTC	Port0	Port1	Port0	Port1	Port0
SmartReflex0	Port0				
SmartReflex1	Port0				
DDR_CFG0	Port0				
DDR_CFG1	Port0				
Spinlock	Port0				
PRCM	Port0				
Control and Top Regs	Port0				
ELM	Port0				
HDMIphy	Port0				
OCPWP	Port0				
McASP0	Port0	Port1	Port0	Port1	Port0
McASP1	Port0	Port1	Port0	Port1	Port0
McASP2	Port0	Port1	Port0	Port1	Port0
Mailbox	Port0	Port1	Port0	Port1	Port0

(1) X, Port0, Port1 = Connection exists.

8 Power, Reset, Clocking, and Interrupts

8.1 Power Supplies

8.1.1 Voltage and Power Domains

The device has the following voltage domains:

- 1-V adaptive voltage scaling (AVS) domain - Main voltage domain for all modules
- 1-V constant domain - Memories, PLLs, DACs, DDR IOs, HDMI, and USB PHYs
- 1.8-V constant domain - PLLs, DACs, HDMI, and USB PHYs
- 3.3-V constant domain - IOs and USB PHY
- 1.5-V constant domain - DDR IOs, PCIe, and SATA SERDES
- 0.9-V constant domain - USB PHY

These domains define groups of modules that share the same supply voltage for their core logic. Each voltage domain is powered by dedicated supply voltage rails. For the mapping between voltage domains and the supply pins associated with each, see Table 4-33.

Note: A regulated supply voltage must be supplied to each voltage domain at all times, regardless of the power domain states.

8.1.2 Power Domains

The device's 1-V AVS and 1-V constant voltage domains have seven power domains that supply power to both the core logic and SRAM within their associated modules. All other voltage domains have only always-on power domain.

Within the 1-V AVS and 1-V constant voltage domains, each power domain, except for the always-on domain, has an internal power switch that can completely remove power from that domain. At power-up, all domains, except always-on, come-up as power gated. Since there is an always-on domain in each voltage domain, all power supplies are expected to be ON all the time (as long as the device is in use).

For details on powering up or powering down the device power domains, see the *AM389x Sitara ARM Processors Technical Reference Manual* (SPRUGX7).

Note: All modules within a power domain are unavailable when the domain is powered OFF. For instructions on powering ON or powering OFF the domains, see the *AM389x Sitara ARM Processors Technical Reference Manual* (SPRUGX7).

8.1.3 1-V AVS and 1-V Constant Power Domains

- **Graphics Domain**

  This domain contains the SGX530 (available only on the AM3894 device).
- **Active Domain**

  The active domain has all modules that are only needed when the system is in "active" state. In any of the standby states, these modules are not needed. This domain contains the HDVPSS peripheral.
- **Default Domain**

  The default domain contains modules that might be required even in standby mode. Having them in a separate power domain allows customers to power gate these modules when in standby mode. This domain has the DDR, SATA, PCIe, Media Controller and USB peripherals.
- **Always-On Domain**

  The always-on domain contains all modules that are required even when the system goes to standby mode. This includes the host ARM and modules that generate wake-up interrupts (for example, UART, RTC, GPIO, EMAC) as well as other low-power IOs.

Copyright © 2010–2015, Texas Instruments Incorporated

8.1.4 SmartReflex™

The device contains SmartReflex modules that are required to minimize power consumption on the voltage domains using external variable-voltage power supplies. Based on the device process, temperature, and desired performance, the SmartReflex modules advise the host processor to raise or lower the supply voltage to each domain for minimal power consumption. The communication link between the host processor and the external regulators is a system-level decision and can be accomplished using GPIOs or I2C.

The major technique employed by SmartReflex in the device is adaptive voltage scaling (AVS). Based on the silicon process and temperature, the SmartReflex modules guide software in adjusting the core 1-V supply voltage within the desired range. This technique is called adaptive voltage scaling (AVS). AVS occurs continuously and in real time, helping to minimize power consumption in response to changing operating conditions.

NOTE

Implementation of SmartReflex AVS is **required** for proper device operation.

8.1.5 Memory Power Management

The device memories offer three different modes to save power when memories are not being used; Table 8-1 provides the details.

Table 8-1. Memory Power Management Modes

MODE	POWER SAVING	WAKE-UP LATENCY	MEMORY CONTENTS
Light Sleep (LS)	~60%	Low	Preserved
Deep Sleep (DS)	~75%	Medium	Preserved
Shut Down (SD)	~95%	High	Lost

The device provides a feature that allows the software to put the chip-level memories (OCMC RAMs) in any of the three (LS, DS, and SD) modes. There are control registers in the control module to control the power-down state of OCMC RAM0 and OCMC RAM1. There are also status registers that can be used during power-up to check if memories are powered-up. For detailed instructions on entering and exiting from light sleep and deep sleep modes, see the *AM389x Sitara ARM Processors Technical Reference Manual* (SPRUGX7).

Memories inside switchable domains go to the shut down (SD) state whenever the power domain goes to the OFF state. Memories come back to functional state along with the domain power-up.

In order to reduce SRAM leakage, many SRAM blocks can be switched from active mode to shut-down mode. When SRAM is put in shut-down mode, the voltage supplied to it is automatically removed and all data in that SRAM is lost.

All SRAM located in a switchable power domain (all domains except always-on) automatically enters shut-down mode whenever its assigned associated power domain goes to the OFF state. The SRAM returns to the active state when the corresponding power domain returns to the ON state.

For detailed instructions on powering up or powering down the various device SRAM, see the *AM389x Sitara ARM Processors Technical Reference Manual* (SPRUGX7).

8.1.6 IO Power-Down Modes

The DDR3 IOs are put into power-down mode automatically when the default power domain is turned OFF.

The HDMI PHY controller is in the always-on power domain, so software must configure the PHY into power-down mode.

There is no power-down mode for the other 3.3-V IOs.

8.1.7 Supply Sequencing

The device power supplies must be sequenced in the following order:

1. 3.3 V
2. 1-V AVS
3. 1-V Constant
4. 1.8 V
5. 1.5 V
6. 0.9 V

Each supply (represented by VDD_B in Figure 8-1) must begin actively ramping between 0 ms and 50 ms after the previous supply (represented by VDD_A in Figure 8-1) in the sequence has reached 80% of its nominal value, as shown in Figure 8-1.

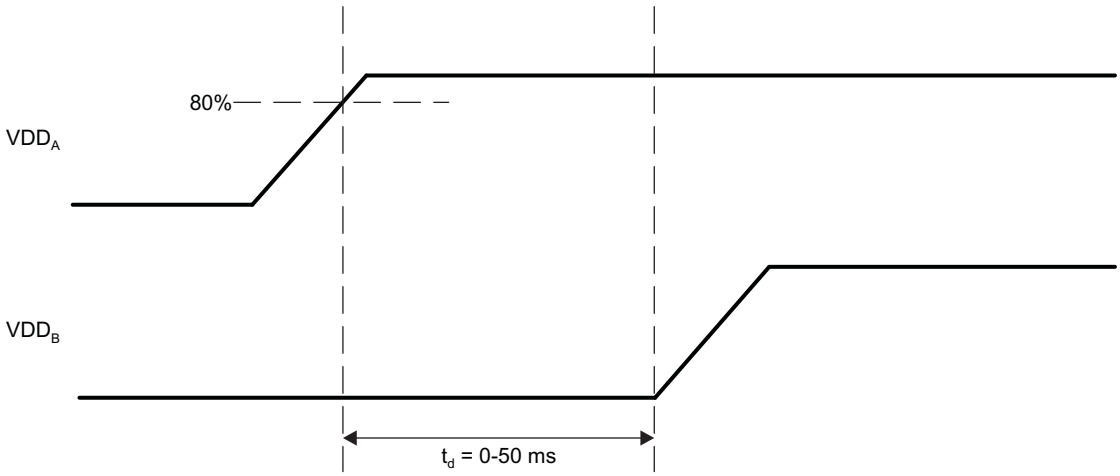

Figure 8-1. Power Sequencing Requirements

NOTE

The device pins are not fail-safe. Device pins should not be externally driven before the corresponding supply rail has been powered up. The corresponding supply rail for each pin can be found in Section 4.2, *Terminal Functions*.

8.1.8 Power-Supply Decoupling

Recommended capacitors for power supply decoupling are all 0.1 µF in the smallest body size that can be used. Capacitors are more effective in the smallest physical size to limit lead inductance. For example, 0402 sized capacitors are better than 0603 sized capacitors, and so on.

Copyright © 2010–2015, Texas Instruments Incorporated

Table 8-2. Recommended Power-Supply Decoupling Capacitors

SUPPLY	MINIMUM CAPACITOR NO.
VDDA_PLL	2 (1)
DVDD1P8	2
VDDT_SATA	2 (1)
VDDT_PCIE	3 (1)
CVDDC	20 (2)
DVDD_3p3	64 (2)
CVDD	28 (2)

(1) PLL supplies benefit from filters or ferrite beads to keep the noise from causing clock jitter. The minimum recommendation is a ferrite bead with a resonance at 100 MHz along with at least one capacitor on the device side of the bead. Additional recommendation is to add one capacitor just before the bead to form a Pi filter. The filter needs to be as close as possible to the device pin, with the device-side capacitor being the most important component to be close to the device pin. PLL pins close together can be combined on the same supply. PLL pins spaced farther away from one another may need individual filtered supplies.
(2) It is recommended to have one bulk (15 µF or larger) capacitor for every 10 smaller capacitors placed as closely as possible to the device.

DDR-related supply capacitor numbers are provided in Section 9.3.

8.2 Reset

8.2.1 System-Level Reset Sources

The device has several types of system-level resets. Table 8-3 lists these reset types, along with the reset initiator and the effects of each reset on the device.

Table 8-3. System-Level Reset Types

TYPE	INITIATOR	RESETS ALL MODULES, EXCLUDING EMULATION	RESETS EMULATION	LATCHES BOOT PINS	ASSERTS $\overline{\text{RSTOUT}}$ PIN
Power-On Reset (POR)	$\overline{\text{POR}}$ pin	Yes	Yes	Yes	Yes
External Warm Reset	$\overline{\text{RESET}}$ pin	Yes	No	Yes	Yes
Emulation Warm Reset	On-Chip Emulation Logic	Yes	No	No	Yes
Watchdog Reset	Watchdog Timer	Yes	No	No	Yes
Software Global Cold Reset	Software	Yes	Yes	No	Yes
Software Global Warm Reset	Software	Yes	No	No	Yes
Test Reset	$\overline{\text{TRST}}$ pin	No	Yes	No	No

8.2.2 Power-On Reset ($\overline{\text{POR}}$ pin)

Power-on reset (POR) is initiated by the $\overline{\text{POR}}$ pin and is used to reset the entire chip, including the test and emulation logic. POR is also referred to as a cold reset since it is required to be asserted when the devices goes through a power-up cycle. However, a device power-up cycle is not required to initiate a power-on reset.

The following sequence must be followed during a power-on reset:

1. Wait for the power supplies to reach normal operating conditions while keeping the $\overline{\text{POR}}$ pin asserted.
2. Wait for the input clock sources SERDES_CLKN and SERDES_CLKNP to be stable (if used by the

system) while keeping the $\overline{\text{POR}}$ pin asserted (low).

3. Once the power supplies and the input clock source are stable, the $\overline{\text{POR}}$ pin must remain asserted (low) for a minimum of 32 DEV_MXI cycles. Within the low period of the $\overline{\text{POR}}$ pin, the following happens:
   (a) All pins enter a Hi-Z mode.
   (b) The PRCM asserts reset to all modules within the device.
   (c) The PRCM begins propagating these clocks to the chip with the PLLs in bypass mode.
4. The $\overline{\text{POR}}$ pin may now be deasserted (driven high). When the $\overline{\text{POR}}$ pin is deasserted (high):
   (a) The BOOT pins are latched.
   (b) Reset to the ARM Cortex-A8 is de-asserted, provided the processor clock is running.
   (c) All other domain resets are released, provided the domain clocks are running.
   (d) The clock, reset, and power-down state of each peripheral is determined by the default settings of the PRCM.
   (e) The ARM Cortex-A8 begins executing from the default address (Boot ROM).

8.2.3 External Warm Reset ($\overline{\text{RESET}}$ pin)

An external warm reset is activated by driving the $\overline{\text{RESET}}$ pin active-low. This resets everything in the device, except the ARM Cortex-A8 interrupt controller, test, and emulation. An emulator session stays alive during warm reset.

The following sequence must be followed during a warm reset:

1. Power supplies and input clock sources should already be stable.
2. The $\overline{\text{RESET}}$ pin must be asserted (low) for a minimum of 32 DEV_MXI cycles. Within the low period of the $\overline{\text{RESET}}$ pin, the following happens:
   (a) All pins, except test and emulation pins, enter a Hi-Z mode.
   (b) The PRCM asserts reset to all modules within the device, except for the ARM Cortex-A8 interrupt controller, test, and emulation.
   (c) $\overline{\text{RSTOUT}}$ is asserted.
3. The $\overline{\text{RESET}}$ pin may now be de-asserted (driven high). When the $\overline{\text{RESET}}$ pin is de-asserted (high):
   (a) The BOOT pins are latched.
   (b) Reset to the ARM Cortex-A8 and modules without a local processor is de-asserted, with the exception of the ARM Cortex-A8 interrupt controller, test, and emulation.
   (c) $\overline{\text{RSTOUT}}$ is de-asserted.
   (d) The clock, reset, and power-down state of each peripheral is determined by the default settings of the PRCM.
   (e) The ARM Cortex-A8 begins executing from the default address (Boot ROM).
   (f) Since the ARM Cortex-A8 interrupt controller is not impacted by warm reset, application software needs to explicitly clear all pending interrupts in the ARM Cortex-A8 interrupt controller.

8.2.4 Emulation Warm Reset

An emulation warm reset is activated by the on-chip emulation module. It has the same effect and requirements as an external warm reset ($\overline{\text{RESET}}$), with the exception that it does not re-latch the BOOT pins.

The emulator initiates an emulation warm reset via the ICEPick module. To invoke the emulation warm reset via the ICEPick module, the user can perform the following from the Code Composer Studio™ IDE menu:

Debug → Advanced Resets → System Reset.

Copyright © 2010–2015, Texas Instruments Incorporated

8.2.5 Watchdog Reset

A watchdog reset is initiated when the watchdog timer counter reaches zero. It has the same effect and requirements as an external warm reset ($\overline{\text{RESET}}$), with the exception that it does not re-latch the BOOT pins. In addition, a watchdog reset always results in $\overline{\text{RSTOUT}}$ being asserted.

8.2.6 Software Global Cold Reset

A software global cold reset is initiated under software control. It has the same effect and requirements as a power-on reset ($\overline{\text{POR}}$), with the exception that it does not re-latch the BOOT pins.

Software initiates a software global cold reset by writing to RST_GLOBAL_COLD_SW in the PRM_RST_CTRL register.

8.2.7 Software Global Warm Reset

A software global warm reset is initiated under software control. It has the same effect and requirements as a external warm reset ($\overline{\text{RESET}}$), with the exception that it does not re-latch the BOOT pins.

Software initiates a software global warm reset by writing to RST_GLOBAL_WARM_SW in the PRM_RST_CTRL register.

8.2.8 Test Reset ($\overline{\text{TRST}}$ pin)

A test reset is activated by the emulator asserting the $\overline{\text{TRST}}$ pin. The only effect of a test reset is to reset the emulation logic.

8.2.9 Local Reset

The local reset for various modules within the device is controlled by programming the PRCM and the module's internal registers. Only the associated module is reset when a local reset is asserted, leaving the rest of the device unaffected.

For details on local reset, see the PRCM chapter of the *AM389x Sitara ARM Processors Technical Reference Manual* (SPRUGX7) and individual subsystem and peripheral user's guides.

8.2.10 Reset Priority

If any of the above reset sources occur simultaneously, the device only processes the highest-priority reset request. The reset request priorities, from high to low, are as follows:

1. Power-on reset ($\overline{\text{POR}}$)
2. Test reset ($\overline{\text{TRST}}$)
3. External warm reset ($\overline{\text{RESET}}$)
4. Emulation warm resets
5. Watchdog reset
6. Software global cold and warm resets.

8.2.11 Reset Status Register

The Reset Status Register (PRM_RSTST) contains information about the last reset that occurred in the system. For more information on this register, see the PRCM chapter of the *AM389x Sitara ARM Processors Technical Reference Manual* (SPRUGX7).

8.2.12 PCIe Reset Isolation

The device supports reset isolation for the PCI Express (PCIe) module. This means that the PCI Express subsystem can be reset without resetting the rest of the device.

When the device is a PCI Express Root Complex (RC), the PCIe subsystem can be reset by software through the PRCM. Software should ensure that there are no ongoing PCIe transactions before asserting this reset by first taking the PCIe subsystem into the IDLE state by programming the register CM_DEFAULT_PCI_CLKCTRL inside the PRCM. After bringing the PCIe subsystem out of reset, bus enumeration should be performed again and should treat all endpoints (EP) as if they had just been connected.

When the device is a PCI Express Endpoint (EP), the PCIe subsystem generates an interrupt when an in-band reset is received. Software should process this interrupt by putting the PCIe subsystem in the IDLE state and then asserting the PCIe local reset through the PRCM.

All device-level resets mentioned in the previous sections, except Test Reset, also reset the PCIe subsystem. Therefore, the device should issue a Hot Reset to all downstream devices and re-enumerate the bus upon coming out of reset.

8.2.13 $\overline{\text{RSTOUT}}$

The $\overline{\text{RSTOUT}}$ pin on the device reflects device reset status and is de-asserted (high) when the device is out of reset. In addition, this output is always 3-stated and the internal pull resistor is disabled on this pin while $\overline{\text{POR}}$ or $\overline{\text{RESET}}$ is asserted; therefore, an external pullup or pulldown can be used to set the state of this pin (high or low) while $\overline{\text{POR}}$ or $\overline{\text{RESET}}$ is asserted. For more detailed information on external pullups and pulldowns, see Section 6.3.1. This output is always asserted low when any of the following resets occur:

- Power-on reset ($\overline{\text{POR}}$)
- External warm reset
- Emulation warm reset ($\overline{\text{RESET}}$)
- Software global cold or warm reset
- Watchdog timer reset.

The $\overline{\text{RSTOUT}}$ pin remains asserted until PRCM releases the host ARM Cortex-A8 processor for reset.

8.2.14 Effect of Reset on Emulation and Trace

The device emulation and trace is only reset by the following sources:

- Power-on reset ($\overline{\text{POR}}$)
- Software global cold reset
- Test reset ($\overline{\text{TRST}}$).

Other than these three, none of the other resets affect emulation and trace functionality.

8.2.15 Reset During Power Domain Switching

Each power domain has a dedicated warm reset and cold reset. Warm reset for a power domain is asserted under either of the following two conditions:

1. A power-on reset, external warm reset, emulation warm reset, or software global cold or warm reset occurs.
2. When that power domain switches from the ON state to the OFF state.

Cold reset for a power domain is asserted under either of the following two conditions:

1. A power-on reset or software global cold reset occurs.
2. When that power domain switches from the ON state to the OFF state.

8.2.16 Pin Behaviors at Reset

When any reset (other than test reset) described in Section 8.2.1 is asserted, all device pins are put into a Hi-Z state except for:

Copyright © 2010–2015, Texas Instruments Incorporated

- Emulation pins. These pins are only put into a Hi-Z state when $\overline{\text{POR}}$ or global software cold reset is asserted.
- $\overline{\text{RSTOUT}}$ pin.

In addition, the PINCNTL registers, which control pin multiplexing, slew control, enabling the pullup or pulldown, and enabling the receiver, are reset to the default state. For a description of the RESET_ISO register, see the *AM389x Sitara ARM Processors Technical Reference Manual* (SPRUGX7).

Internal pullup or pulldown (IPU or IPD) resistors are enabled during and immediately after reset as described in the OTHER column in the tables in Section 4.2, *Terminal Functions*.

8.2.17 Reset Electrical Data and Timing

NOTE

If a configuration pin must be routed out from the device, the internal pullup or pulldown (IPU or IPD) resistor should not be relied upon; TI recommends the use of an external pullup or pulldown resistor.

Table 8-4. Timing Requirements for Reset

(see Figure 8-2 and Figure 8-3)

NO.			MIN	MAX	UNIT
1	$t_{w(RESET)}$	Pulse duration, $\overline{\text{POR}}$ low or $\overline{\text{RESET}}$ low	32C (1)		ns
2	$t_{su(CONFIG)}$	Setup time, boot and configuration pins valid before $\overline{\text{POR}}$ high or $\overline{\text{RESET}}$ high (2)	12C (1)		ns
3	$t_{h(CONFIG)}$	Hold time, boot and configuration pins valid after $\overline{\text{POR}}$ high or $\overline{\text{RESET}}$ high (2)	0		ns

(1) C = 1/DEV_MXI clock frequency, in ns. The device clock source must be stable and at a valid frequency prior to meeting the $t_{w(RESET)}$ requirement.
(2) For the list of boot and configuration pins, see Table 4-1, *Boot Terminal Functions*.

Table 8-5. Switching Characteristics Over Recommended Operating Conditions During Reset

(see Figure 8-2)

NO.	PARAMETER		MIN	MAX	UNIT
	$t_{w(RSTL)}$	Pulse width, $\overline{\text{RESET}}$ low	10C (1)		ns
4	$t_{d(RSTL_IORST)}$	Delay time, $\overline{\text{RESET}}$ falling to all IO entering reset state	0	14	ns
5	$t_{d(RSTL_IOFUNC)}$	Delay time, $\overline{\text{RESET}}$ rising to IO exiting reset state	0	14	ns

(1) C = 1/DEV_CLKIN clock frequency, in ns.

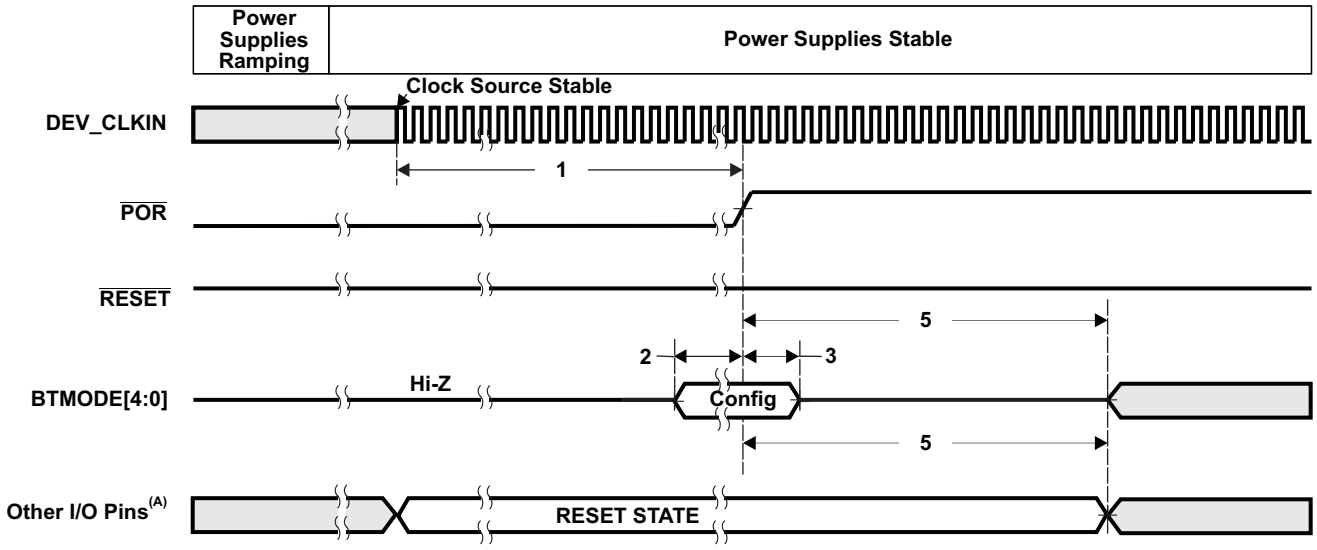

A. For more detailed information on the reset state of each pin, see Section 8.2.16, *Pin Behaviors at Reset*. For the IPU and IPD settings during reset, see Section 4.2, *Terminal Functions*.

Figure 8-2. Power-Up Timing

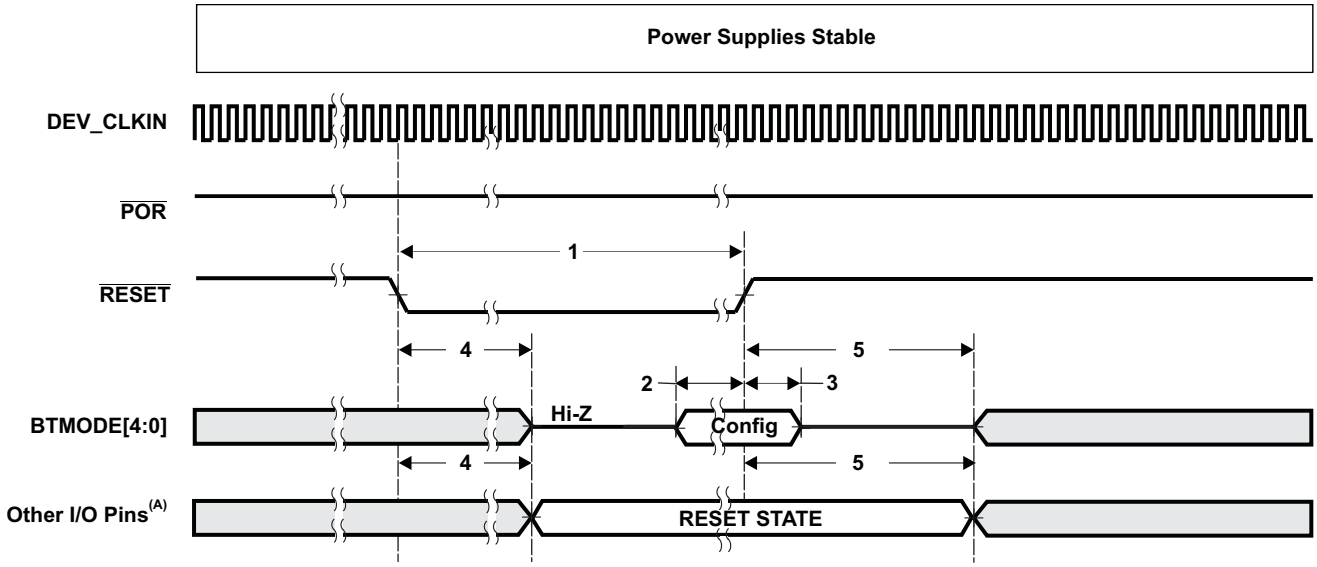

A. For more detailed information on the reset state of each pin, see Section 8.2.16, *Pin Behaviors at Reset*. For the IPU and IPD settings during reset, see Section 4.2, *Terminal Functions*.

Figure 8-3. Warm Reset ($\overline{\text{RESET}}$) Timing

8.3 Clocking

The device clocks are generated from several external reference clocks that are fed to on-chip PLLs and dividers (both inside and outside of the PRCM Module). Figure 8-4 shows a high-level overview of the device clocking structure. Note that to reduce complexity, all clocking connections are not shown. For detailed information on the device clocks, see the Device Clocking and Flying Adder PLL section of the *AM389x Sitara ARM Processors Technical Reference Manual* (SPRUGX7).

Copyright © 2010–2015, Texas Instruments Incorporated

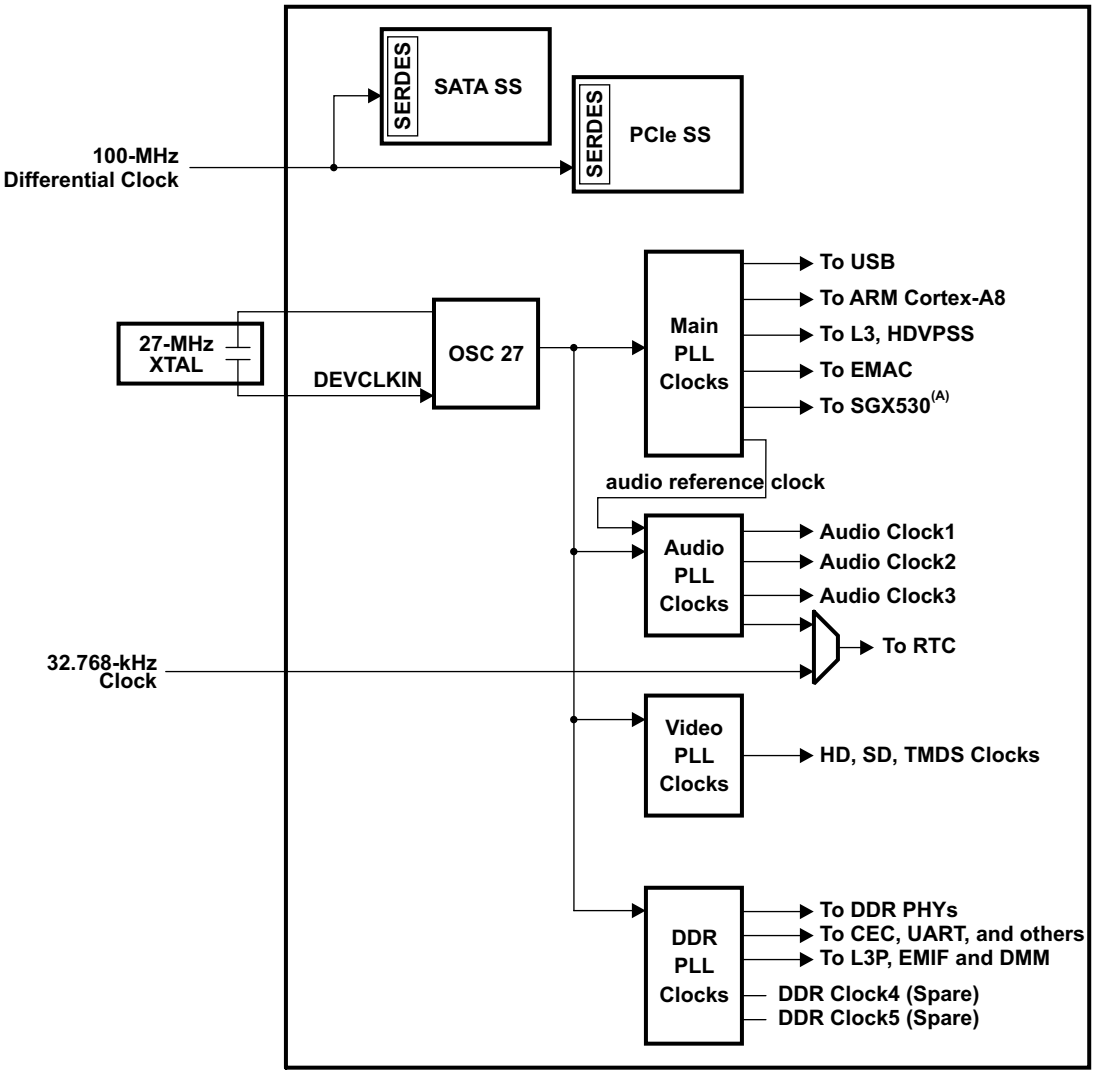

A. SGX530 is available only on the AM3894 device.

Figure 8-4. System Clocking Overview

8.3.1 Device Clock Inputs

The device has four on-chip PLLs and one reference clock which are generated by on-chip oscillators. In addition to the 27-MHz reference clock, a 100-MHz differential clock input is required for SATA and PCIe. A third clock input is an optional 32.768-kHz clock input (no on-chip oscillator) for the RTC.

The device clock input (DEV_MXI and DEV_CLKIN) is used to generate the majority of the internal reference clocks. An external square-wave clock can be supplied to DEV_CLKIN instead of using a crystal input. The device clock should be 27 MHz.

Section 8.3.1.1 provides details on using the on-chip oscillators with external crystals for the 27-MHz system oscillator.

8.3.1.1 Using the Internal Oscillators

When the internal oscillators are used to generate the device clock, external crystals are required to be connected across the MXI and MXO pins, along with two load capacitors, as shown in Figure 8-5. The external crystal load capacitors should also be connected to the associated oscillator ground pin (DEVOSC_VSS). The capacitors should not be connected to board ground (VSS).

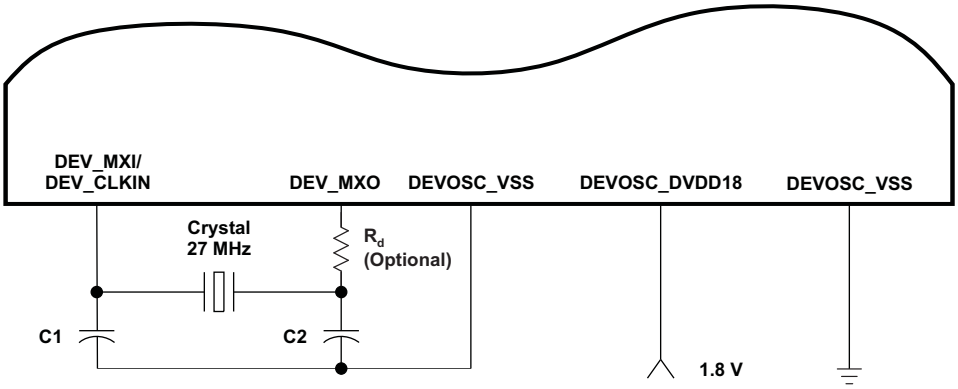

Figure 8-5. 27-MHz System Oscillator

The load capacitors, C1 and C2 in Figure 8-5, should be chosen such that the equation below is satisfied. C_L in the equation is the load specified by the crystal manufacturer. R_d is an optional damping resistor. All discrete components used to implement the oscillator circuit should be placed as close as possible to the associated oscillator MXI, MXO, and VSS pins.

$$C_L = \frac{C_1 C_2}{(C_1 + C_2)}$$

Table 8-6. Input Requirements for Crystal Circuit on the Device Oscillator

PARAMETER	MIN	NOM	MAX	UNIT
Start-up time (from power up until oscillating at stable frequency of 27 MHz)			4	ms
Crystal Oscillation frequency		27		MHz
Parallel Load Capacitance (C1 and C2)	12		24	pF
Crystal ESR			60	Ohm
Crystal Shunt Capacitance			5	pF
Crystal Oscillation Mode		Fundamental Only		
Crystal Frequency stability			±50	ppm

Copyright © 2010–2015, Texas Instruments Incorporated

Table 8-7. DEV_CLKIN Clock Source Requirements(1)(2)(3)

(see Figure 8-6)

NO.			MIN	NOM	MAX	UNIT
1	$t_{c(DCK)}$	Cycle time, DEV_CLKIN		37.037		ns
2	$t_{w(DCKH)}$	Pulse duration, DEV_CLKIN high	0.45C		0.55C	ns
3	$t_{w(DCKL)}$	Pulse duration, DEV_CLKIN low	0.45C		0.55C	ns
4	$t_{t(DCK)}$	Transition time, DEV_CLKIN			7	ns
5	$t_{J(DCK)}$	Period jitter, DEV_CLKIN (VDACs not used)			150	ps
		Period jitter, DEV_CLKIN (VDACs used)			A	s
	S_f	Frequency stability, DEV_CLKIN			±50	ppm

(1) The reference points for the rise and fall transitions are measured at V_{IL} MAX and V_{IH} MIN.
(2) C = DEV_CLKIN cycle time in ns.
(3)

$$A = 10 * \frac{10^{\frac{-SNR}{20}}}{2 * \pi * BW} * \sqrt{\frac{BW}{27\ MHz}}\ (s)$$

Where SNR is the desired signal-to-noise ratio and BW is the highest DAC signal bandwidth used in the system (SD = 6 MHz, 720p or 1080i = 30 MHz, 1080p = 60 MHz).

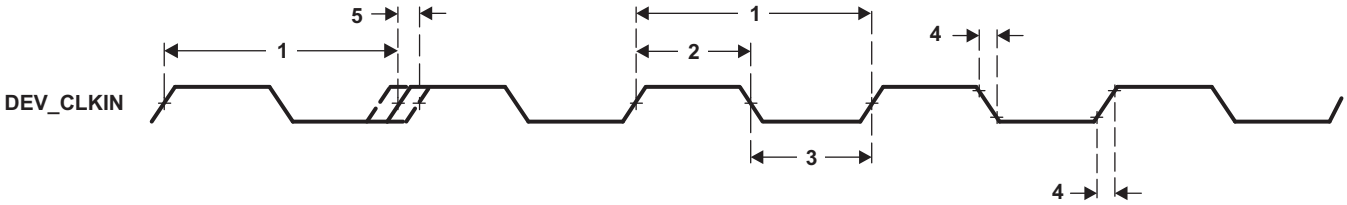

Figure 8-6. DEV_CLKIN Timing

8.3.2 SERDES_CLKN and SERDES_CLKP Input Clock

A high-quality, low-jitter differential clock source is required for the PCIe and SATA PHYs. The clock is required to be AC coupled to the device's SERDES_CLKP and SERDES_CLKN pins according to the specifications in Table 8-11. Both the clock source and the coupling capacitors should be placed physically as close as possible to the processor.

When the PCIe interface is used, the SERDES_CLKN or SERDES_CLKP clock is required to meet the REFCLK AC specifications outlined in the *PCI Express Card Electromechanical Specification (Gen.1 and Gen.2)*. When the SATA interface is used, the SERDES_CLKN or SERDES_CLKP clock is required to meet the specifications in Table 8-8. When both the PCIe and SATA interfaces are used, both sets of specifications must be met simultaneously.

Table 8-8. SERDES_CLKN and SERDES_CLKP Clock Source Requirements for SATA

PARAMETER	MIN	TYP	MAX	UNIT
Clock Frequency		100		MHz
Jitter			50	Ps pk-pk
Duty Cycle	40		60	%
Rise and Fall Time		700		ps

An HCSL differential clock source is required to meet the REFCLK AC specifications outlined in the PCI Express Card Electromechanical Specification, Rev. 2.0, at the input to the AC coupling capacitors. In addition, LVDS clock sources that are compliant to the above specification, but with the exceptions shown in Table 8-9, are also acceptable.

Table 8-9. Exceptions to REFCLK AC Specification for LVDS Clock Sources

SYMBOL	PARAMETER	MIN	MAX	UNIT
V_{IH}	Differential input high voltage (V_{IH})	125	1000	mV
V_{IL}	Differential input high voltage (V_{IL})	-1000	-125	mV

Table 8-10. SERDES_CLKN and SERDES_CLKP Routing Specifications

PARAMETER	MIN	TYP	MAX	UNIT
Number of stubs allowed on SERDES_CLKN and SERDES_CLKP traces			0	Stubs
SERDES_CLKN and SERDES_CLKP trace length from oscillator to device			24000 (1)	Mils
SERDES_CLKN and SERDES_CLKP pair differential impedance		100		Ohms
Number of vias on each SERDES_CLKN and SERDES_CLKP trace (2)			3	Vias
SERDES_CLKN and SERDES_CLKP differential pair to any other trace spacing	2*DS (3)			

(1) Keep trace length as short as possible.
(2) Vias must be used in pairs with their distance minimized.
(3) DS is the differential spacing of the SERDES_CLKN and SERDES_CLKP traces.

AC coupling capacitors are required on the SERDES_CLKN and SERDES_CLKP pair. Table 8-11 shows the requirements for these capacitors.

Table 8-11. SERDES_CLKN and SERDES_CLKP AC Coupling Capacitors Requirements

PARAMETER	MIN	TYP	MAX	UNIT
SERDES_CLKN and SERDES_CLKP AC coupling capacitor value (1)	0.24	0.27	4	nF
SERDES_CLKN and SERDES_CLKP AC coupling capacitor package size			0402	10 Mils (2) (3)

(1) The value of this capacitor depends on several factors including differential input clock swing. For a 100-MHz differential clock with an approximate 1-V voltage swing, the recommended typical value for the SERDES clock AC coupling capacitors is 270 pF. Deviating from this recommendation can result in the reduction of clock signal amplitude or lowering the noise rejection characteristics.
(2) LxW, 10 mil units; a 0402 is a 40x20 mil surface mount capacitor.
(3) The physical size of the capacitor should be as small as possible.

8.3.3 CLKIN32 Input Clock

An external 32.768-kHz clock input can optionally be provided at the CLKIN32 pin to serve as a reference clock in place of the RTCDIVIDER clock for the RTC and Timer modules. If the CLKIN32 pin is not connected to a 32.768-kHz clock input, this pin should be pulled low. The CLKIN32 source must meet the timing requirements shown in Table 8-12.

Table 8-12. Timing Requirements for CLKIN32 (1) (2)

(see Figure 8-7)

NO.			MIN	NOM	MAX	UNIT
1	$t_{c(CLKIN32)}$	Cycle time, CLKIN32	1/32768			s
2	$t_{w(CLKIN32H)}$	Pulse duration, CLKIN32 high	0.45C		0.55C	ns
3	$t_{w(CKIN32L)}$	Pulse duration, CLKIN32 low	0.45C		0.55C	ns
4	$t_{t(CLKIN32)}$	Transition time, CLKIN32			7	ns
5	$t_{J(CLKIN32)}$	Period jitter, CLKIN32			0.02C	ns

(1) The reference points for the rise and fall transitions are measured at V_{IL} MAX and V_{IH} MIN.
(2) C = CLKIN32 cycle time, in ns. For example, when CLKIN32 frequency is 32768 Hz, use C = 1/32768 s.

Copyright © 2010–2015, Texas Instruments Incorporated

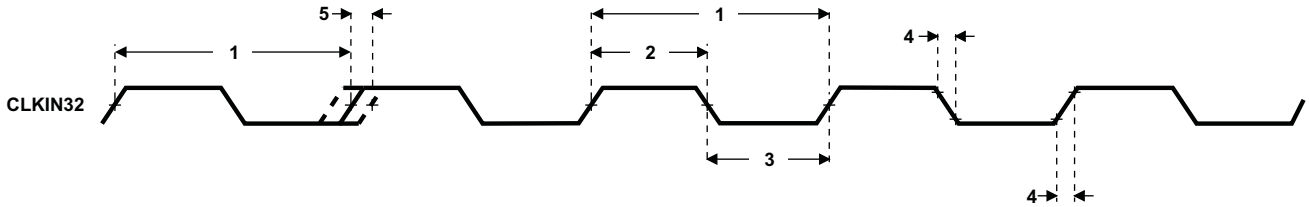

Figure 8-7. CLKIN32 Timing

8.3.4 PLLs

The device contains four embedded PLLs (Main, Audio, Video and DDR) that provide clocks to different parts of the system. For a high-level view of the device clock architecture, including the PLL reference clock sources and connections, see Figure 8-4.

The reference clock for most of the PLLs comes from the DEV_CLKIN input clock. Also, each PLL supports a bypass mode in which the reference clock can be directly passed to the PLL CLKOUT. All device PLLs (except the DDR PLL) come-up in bypass mode after reset.

Flying-adder PLLs are used for all the on-chip PLLs. Figure 8-8 shows the basic structure of the flying-adder PLL.

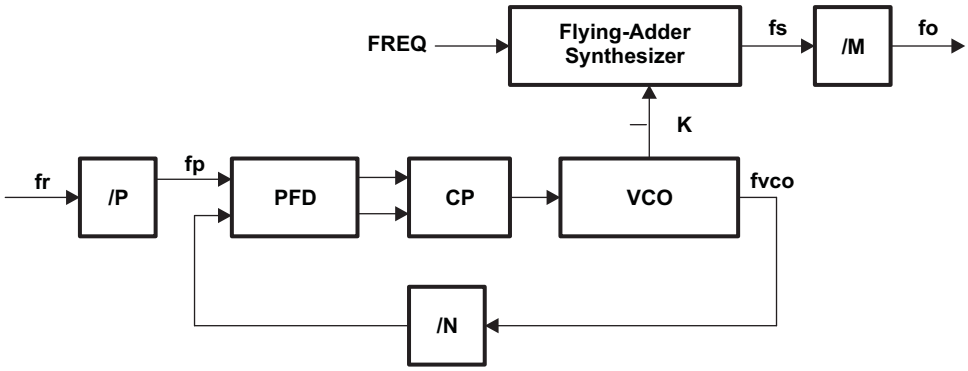

Figure 8-8. Flying-Adder PLL

The flying-adder PLL has two main components: a multi-phase PLL and the flying-adder synthesizer. The multi-phase PLL takes an input reference clock (fr), multiplies it with factor, N, and provides a K-phase output to the flying-adder synthesizer. The flying-adder synthesizer takes this multi-phase clock input and produces a variable frequency clock (fs). There can be a post divider on this clock which takes in clock fs and drives out clock fo. The frequency of the clock driven out is given by:

$$fo = \left[\frac{(N * K)}{(FREQ * P * M)}\right] * fr$$

There can be multiple flying-adder synthesizers attached to one multi-phase PLL to generate different frequencies. In this case, FREQ (4 bits of integer and 24 bits of fractional value) and M (1 to 255) values can be adjusted for each clock separately, based on the frequency needed. The multi-phase PLL used in this device has a value of K = 8.

For details on programming the device PLLs, see the PLL chapter of the *AM389x Sitara ARM Processors Technical Reference Manual* (SPRUGX7).

8.3.4.1 PLL Programming Limits

The PLL and Flying Adder Synthesizers support generation of a wide range of clocks that are all generated from the same input clock source. Therefore, these clocks are all synchronous. The flying-adder synthesizers take the multi-phase clock from the PLL and produce variable frequency clocks (fs) as stated in the previous section. Each variable frequency clock is then divided by a post divider before use.

The clock outputs from the PLL, Synthesizer and Post Divider contain period variations that must be considered. The minimum period of the generated clock is effectively the maximum clock rate. Different configurations of the PLL dividers, Synthesizer and output dividers will have larger or smaller amounts of phase variation. The equation below will calculate the minimum cycle period for a given set of settings. The result of the following minimum cycle equation must be greater than the value shown in Table 8-13.

The first term of the below equation is a characteristic of the Flying Adder PLL. The selection of M*FREQ is important. Choosing a non-integer value of M*FREQ will cause larger period variation and a higher peak instantaneous frequency. Use of non-integer M*FREQ can be done to create specific average frequencies at the cost of higher phase variation. Using integer values of M*FREQ result in minimum phase variation. The second and third terms are PLL phase jitter terms associated with the frequency synthesis. The second term is about 20ps and the third is normally 10ps.

Please refer to the Technical Reference Manual (SPRUGX7) for examples using this equation. The TRM also contains a standard set of configurations that we recommend for customer use.

$$\left(\frac{\text{Floor}(M * FREQ) * P * 10^6}{PLL_CLKIN * 8 * N}\right) - \sqrt{\frac{A * M * FREQ}{8}} - H$$

Where:

- PLL_CLKIN is the input clock frequency (in MHz) to the PLL before the P divider
- Floor( ) = round down
- M = PLL divider
- FREQ = PLL frequency setting
- A = 169 for all PLLs with the following exception: A = 218 for the audio PLL when its input is sourced from the main PLL output
- H = 0 if M * FREQ is a multiple of 8; otherwise, H = 10
- 800 MHz ≤ PLL_CLKIN * N / P ≤ 1600 MHz
- 10 MHz ≤ PLL_CLKIN / P ≤ 60 MHz

Copyright © 2010–2015, Texas Instruments Incorporated

Table 8-13. PLL Clock Frequencies (1)

CLOCK	DEVICE SPEED RANGE	MIN CYCLE (ps)
Main PLL		
Clock 2	Blank	1000
	2	833
	4	741
Clock 3	Blank	1876
	2	1667
	4	1481
Clock 4	Blank	2000
	2	1786
	4	1667
DDR PLL		
Clock 2	Blank, 2, 4	18519
Clock 3	Blank	2632
	2	2632
	4	2222
Video PLL		
Clock 1	Blank, 2, 4	1515
Clock 2	Blank, 2, 4	1515
Clock 3	Blank, 2, 4	1515
Audio PLL		
Clock 2	Blank, 2, 4	6329
Clock 3	Blank, 2, 4	5076
Clock 4	Blank, 2, 4	5076
Clock 5	Blank, 2, 4	5076

(1) For more information on the available device speed ranges for each part number, see Table 10-1

8.3.4.2 PLL Power Supply Filtering

The device PLLs are supplied externally via the VDDA_PLL power-supply pins. External filtering must be added on the PLL supply pins to ensure that the requirements in Table 8-14 are met.

Table 8-14. Power Supply Requirements

PARAMETER	MIN	MAX	UNIT
Dynamic noise at VDDA_PLL pins		50	mV p-p

8.3.4.3 PLL Locking Sequence

All of the flying-adder PLLs (except the DDR PLL) come-up in bypass mode at reset. All of the registers (P, N, FREQ, and M) need to be programmed appropriately and then wait approximately 8 µs for PLL_Audio and 5 µs for the other PLLS to be locked. Verification that the PLL is locked can be checked by accessing the lock status bit in the PLL control register for each PLL (bit = 1 when the PLL is locked). Once the PLL is locked, then the FA-PLL can be taken out of bypass mode. Control for bypass mode is through chip-level registers. For more details on the PLL registers and bypass logic, see the PLL chapter of the *AM389x Sitara ARM Processors Technical Reference Manual* (SPRUGX7).

8.3.4.4 PLL Registers

The PLL control registers reside in the control module and are listed in Table 6-3.

8.3.5 SYSCLKs

In some cases, the system clock inputs and PLL outputs are sent to the PRCM module for division and multiplexing before being routed to the various device modules. These clock outputs from the PRCM module are called SYSCLKs. Table 8-15 lists the main device SYSCLKs along with their maximum supported clock frequencies. In addition, limits shown in the table may be further restricted by the clock frequency limitations of the device modules using these clocks. For more details on module clock frequency limits, see Section 8.3.6.

Table 8-15. SYSCLK Frequencies

SYSCLK	PLL Type	DEVICE SPEED RANGE (1)	MAXIMUM FREQUENCY (MHz) (2)	DESTINATION
SYSCLK2	Main	Blank	930	To ARM Cortex-A8
		2	1100	
		4	1200	
SYSCLK3	Main	Blank	500	To HDVICP2s
		2	550	
		4	630	
SYSCLK4	Main	Blank	460	L3, OCP clock for HDVPSS, TPTCs, TPCC, DMM, Unicache clock for Media Controller, EDMA
		2	550	
		4	570	
SYSCLK5	Main	Blank	230	L3, L4_HS, OCP clock for EMAC, SATA, PCIe, Media Controller, OCMC RAM
		2	275	
		4	285	
SYSCLK6	Main	Blank	115	L3, L4_STD, UART, I2C, SPI, SD, SDIO, TIMER, GPIO, PRCM, McASP, McBSP, GPMC, ELM, HDMI, WDT, Mailbox, RTC, Spinlock, SmartReflex and USB
		2	137	
		4	143	
SYSCLK7	Main	Blank	90	Reserved
		2	110	
		4	115	
SYSCLK8	Main	Blank	364	DMM, DDR OCP clock
		2	364	
		4	425	
SYSCLK9	DDR	Blank, 2, 4	16	CEC clock, VTP
SYSCLK10	DDR	Blank, 2, 4	48	SPI, I2C, SDIO, and UART functional clock
SYSCLK11	Video	Blank, 2, 4	216	Reserved
SYSCLK13	Video	Blank, 2, 4	165	HDVPSS
SYSCLK14	Video	Blank, 2, 4	27	Reserved
SYSCLK15	Video	Blank, 2, 4	165	HDVPSS
SYSCLK16	Video	Blank, 2, 4	27	Reserved
SYSCLK17	Video	Blank, 2, 4	54	HDVPSS
SYSCLK18	Audio	Blank, 2, 4	32 KHz	RTC
SYSCLK19	Audio	Blank, 2, 4	160	Reserved
SYSCLK20	Audio	Blank, 2, 4	196	Audio clock 1
SYSCLK21	Audio	Blank, 2, 4	196	Audio clock 2
SYSCLK22	Audio	Blank, 2, 4	196	Audio clock 3
SYSCLK23	Main	Blank	310	SGX530 OCP clock
		2	275	
		4	300	
SYSCLK24	Main	Blank, 2, 4	125	GMII clock

(1) For more information on the available device speed ranges for each part number, see Table 10-1.
(2) Maximum frequency must respect the minimum cycle limitations described in Section 8.3.4.1.

Copyright © 2010–2015, Texas Instruments Incorporated

8.3.6 Module Clocks

Device modules receive their clock directly from an external clock input, directly from a PLL, or from a PRCM SYSCLK output. Table 8-16 lists the clock source options for each module, along with the maximum frequency that module can accept. The device PLLs and dividers must be programmed not to exceed the maximum frequencies listed in this table to ensure proper module functionality.

Table 8-16. Module Clock Frequencies

MODULE	CLOCK SOURCES	DEVICE SPEED RANGE (1)	MAX. FREQUENCY (MHz) (2)
Cortex-A8	SYSCLK2	Blank	930
		2	1100
		4	1200
DMM	SYSCLK4	Blank	460
		2	550
		4	570
DMM, DDR OCP	SYSCLK8	Blank	364
		2	364
		4	425
EDMA	SYSCLK4	Blank	460
		2	550
		4	570
ELM	SYSCLK6	Blank	115
		2	137
		4	143
EMAC	SYSCLK5	Blank	230
		2	275
		4	285
GPIO0 and GPIO1	SYSCLK6	Blank	115
		2	137
		4	143
	SYSCLK18	Blank, 2, 4	32.768 KHz
GPMC	SYSCLK6	Blank	115
		2	137
		4	143
HDMI	SYSCLK6	Blank	115
		2	137
		4	143
HDMI CEC	SYSCLK9	Blank, 2, 4	16
HDVICP2-0, HDVICP2-1, HDVICP2-2	SYSCLK3	Blank	500
		2	550
		4	630
HDVPSS VPDMA	SYSCLK4	Blank	460
		2	550
		4	570
HDVPSS	SYSCLK5	Blank	230
		2	275
		4	285

(1) For more information on the available device speed ranges for each part number, see Table 10-1.
(2) Maximum frequency must respect the minimum cycle limitations described in Section 8.3.4.1.

Table 8-16. Module Clock Frequencies (continued)

MODULE	CLOCK SOURCES	DEVICE SPEED RANGE (1)	MAX. FREQUENCY (MHz) (2)
HDVPSS Interface	SYSCLK6	Blank	115
		2	137
		4	143
HDVPSS HD VENCD	SYSCLK13	Blank, 2, 4	165
HDVPSS HD VENCA	SYSCLK15	Blank, 2, 4	165
HDVPSS SD VENC	SYSCLK17	Blank, 2, 4	54
I2C0, I2C1	SYSCLK6	Blank	115
		2	137
		4	143
	SYSCLK10	Blank, 2, 4	48
L3	SYSCLK4	Blank	460
		2	550
		4	570
L3	SYSCLK5	Blank	230
		2	275
		4	285
L3	SYSCLK6	Blank	115
		2	137
		4	143
L4 HS	SYSCLK5	Blank	230
		2	275
		4	285
L4 STD	SYSCLK6	Blank	115
		2	137
		4	143
Mailbox	SYSCLK6	Blank	115
		2	137
		4	143
McASP0, McASP1, McASP2	SYSCLK6	Blank, 2, 4	125
McBSP	SYSCLK6	Blank, 2, 4	125
Media Controller	SYSCLK5	Blank	230
		2	275
		4	285
System MMU	SYSCLK4	Blank	460
		2	550
		4	570
OCMC RAM	SYSCLK5	Blank	230
		2	275
		4	285
PCIe	SYSCLK5	Blank	230
		2	275
		4	285
RTC	SYSCLK6	Blank	115
		2	137
		4	143
	SYSCLK18	Blank, 2, 4	32.768 KHz

Copyright © 2010–2015, Texas Instruments Incorporated

Table 8-16. Module Clock Frequencies (continued)

MODULE	CLOCK SOURCES	DEVICE SPEED RANGE (1)	MAX. FREQUENCY (MHz) (2)
SATA	SYSCLK5	Blank	230
		2	275
		4	285
SD, SDIO	SYSCLK6	Blank	115
		2	137
		4	143
	SYSCLK10	Blank, 2, 4	48
SGX530	SYSCLK23	Blank	310
		2	275
		4	300
SmartReflex	SYSCLK6	Blank	115
		2	137
		4	143
SPI	SYSCLK6	Blank	115
		2	137
		4	143
	SYSCLK10	Blank, 2, 4	48
Spinlock	SYSCLK6	Blank	115
		2	137
		4	143
Timers, WDT	SYSCLK6	Blank	115
		2	137
		4	143
	SYSCLK18	Blank, 2, 4	32.768 KHz
UART0, UART1, UART2	SYSCLK6	Blank	115
		2	137
		4	143
	SYSCLK10	Blank, 2, 4	48
USB0, USB1	SYSCLK6	Blank	115
		2	137
		4	143

8.3.7 Output Clock Select Logic

The device includes one selectable general-purpose clock output (CLKOUT). The source for these output clocks is controlled by the CLKOUT_MUX register in the control module and shown in Figure 8-9.

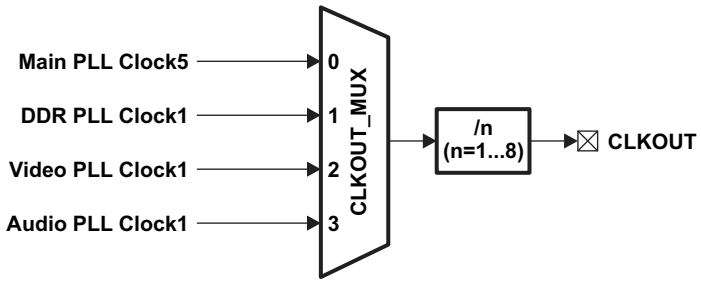

Figure 8-9. CLKOUT Source Selection Logic

As shown in the figure, there are four possible sources for CLKOUT, one clock from each of the four PLLs. The selected clock can be further divided by any ratio from 1 to 1/8 before going out on the CLKOUT pin. The default selection is to select main PLL clock5, divider set to 1/1, and clock disabled.

Table 8-17. Switching Characteristics Over Recommended Operating Conditions for CLKOUT(1) (2)

(see Figure 8-10)

NO.	PARAMETER		MIN	MAX	UNIT
1	$t_{c(CLKOUT)}$	Cycle time, CLKOUT	10		ns
2	$t_{w(CLKOUTH)}$	Pulse duration, CLKOUT high	0.45P	0.55P	ns
3	$t_{w(CLKOUTL)}$	Pulse duration, CLKOUT low	0.45P	0.55P	ns
4	$t_{t(CLKOUT)}$	Transition time, CLKOUT		0.05P	ns

(1) The reference points for the rise and fall transitions are measured at V_{OL} MAX and V_{OH} MIN.
(2) P = 1/CLKOUT clock frequency in nanoseconds (ns). For example, when CLKOUT frequency is 100 MHz, use P = 10 ns.

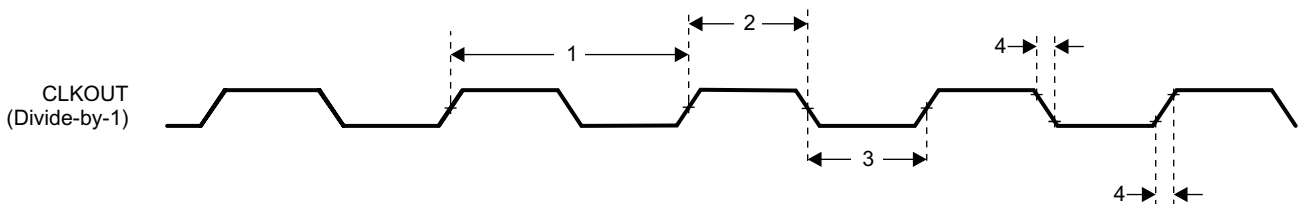

Figure 8-10. CLKOUT Timing

Copyright © 2010–2015, Texas Instruments Incorporated

8.4 Interrupts

The device has a large number of interrupts. It also has the ARM Cortex™-A8 master capable of servicing interrupts. Specific details, such as the processing flow, configuration steps, and interrupt controller registers, for each of these masters are found in their respective subsystem documentation.

8.4.1 Interrupt Summary List

Table 8-18 lists all the device interrupts by module and indicates the interrupt destination: ARM Cortex™-A8.

Table 8-18. Interrupts By Module

MODULE	INTERRUPT	DESTINATION	DESCRIPTION
		Cortex™-A8	
Serial ATA	INTRQ		SATA Module interrupt
	INTRQ_PEND_N	X	
EMAC SS0	C0_RX_THRESH_INTR_REQ		Receive threshold (non paced)
	C0_RX_THRESH_INTR_PEND	X	
	C0_RX_INTR_REQ		Receive pending interrupt (paced)
	C0_RX_INTR_PEND	X	
	C0_TX_INTR_REQ		Transmit pending interrupt (paced)
	C0_TX_INTR_PEND	X	
	C0_MISC_INTR_REQ		Stat, Host, MDIO LINKINT or MDIO USERINT
	C0_MISC_INTR_PEND	X	
EMAC SS1	C0_RX_THRESH_INTR_REQ		Receive threshold (non paced)
	C0_RX_THRESH_INTR_PEND	X	
	C0_RX_INTR_REQ		Receive pending interrupt (paced)
	C0_RX_INTR_PEND	X	
	C0_TX_INTR_REQ		Transmit pending interrupt (paced)
	C0_TX_INTR_PEND	X	
	C0_MISC_INTR_REQ		Stat, Host, MDIO LINKINT or MDIO USERINT
	C0_MISC_INTR_PEND	X	
USB2.0 SS	USBSS_INTR_REQ		Queue MGR or CPPI Completion interrupt
	USBSS_INTR_PEND	X	
	USB0_INTR_REQ		RX and TX DMA, Endpoint ready or error, or USB2.0 interrupt
	USB0_INTR_PEND	X	
	USB1_INTR_REQ		
	USB1_INTR_PEND	X	
	SLV0P_SWAKEUP	X	USB wakeup

Table 8-18. Interrupts By Module (continued)

MODULE	INTERRUPT	DESTINATION	DESCRIPTION
		Cortex™-A8	
PCIe Gen2	PCIE_INT_I_INTR0		Legacy interrupt (RC mode only)
	PCIE_INT_I_INTR_PEND_N0	X	
	PCIE_INT_I_INTR1		MSI interrupt (RC mode only)
	PCIE_INT_I_INTR_PEND_N1	X	
	PCIE_INT_I_INTR2		Error interrupt
	PCIE_INT_I_INTR_PEND_N2	X	
	PCIE_INT_I_INTR3		Power Management interrupt
	PCIE_INT_I_INTR_PEND_N3	X	
	PCIE_INT_I_INTR4		Reserved
	PCIE_INT_I_INTR_PEND_N4		
	PCIE_INT_I_INTR5		
	PCIE_INT_I_INTR_PEND_N5		
	PCIE_INT_I_INTR6		
	PCIE_INT_I_INTR_PEND_N6		
	PCIE_INT_I_INTR7		
	PCIE_INT_I_INTR_PEND_N7		
	PCIE_INT_I_INTR8		
	PCIE_INT_I_INTR_PEND_N8		
	PCIE_INT_I_INTR9		
	PCIE_INT_I_INTR_PEND_N9		
	PCIE_INT_I_INTR10		
	PCIE_INT_I_INTR_PEND_N10		
	PCIE_INT_I_INTR11		
	PCIE_INT_I_INTR_PEND_N11	X	
	PCIE_INT_I_INTR12		
	PCIE_INT_I_INTR_PEND_N12	X	
	PCIE_INT_I_INTR13		
	PCIE_INT_I_INTR_PEND_N13	X	
	PCIE_INT_I_INTR14		
	PCIE_INT_I_INTR_PEND_N14	X	
	PCIE_INT_I_INTR15		
	PCIE_INT_I_INTR_PEND_N15	X	
	SLE_IDLEP_SWAKEPUP	X	PCIe wakeup

Copyright © 2010–2015, Texas Instruments Incorporated

Table 8-18. Interrupts By Module (continued)

MODULE	INTERRUPT	DESTINATION Cortex™-A8	DESCRIPTION
TPCC	TPCC_INT_PO[0]		Region 0 DMA completion
	TPCC_INT_PEND_N[0]	X	
	TPCC_INT_PO[1]		Region 1 DMA completion
	TPCC_INT_PEND_N[1]		
	TPCC_INT_PO[2]		Region 2 DMA completion
	TPCC_INT_PEND_N[2]		
	TPCC_INT_PO[3]		Region 3 DMA completion
	TPCC_INT_PEND_N[3]		
	TPCC_INT_PO[4]		Region 4 DMA completion
	TPCC_INT_PEND_N[4]		
	TPCC_INT_PO[5]		Region 5 DMA completion
	TPCC_INT_PEND_N[5]		
	TPCC_INT_PO[6]		Region 6 DMA completion
	TPCC_INT_PEND_N[6]		
	TPCC_INT_PO[7]		Region 7 DMA completion
	TPCC_INT_PEND_N[7]		
	TPCC_MPINT_PO		Memory protection error
	TPCC_MPINT_PEND_N	X	
	TPCC_ERRINT_PO		TPCC error
	TPCC_ERRINT_PEND_N	X	
	TPCC_INTG_PO		DMA Global completion
	TPCC_INTG_PEND_N		
TPTC 0	TPTC_ERRINT_PO		TPTC0 error
	TPTC_LERRINT_PO	X	
	TPTC_INT_PO		TPTC0 completion
	TPTC_LINT_PO		
TPTC 1	TPTC_ERRINT_PO		TPTC1 error
	TPTC_LERRINT_PO	X	
	TPTC_INT_PO		TPTC1 completion
	TPTC_LINT_PO		
TPTC 2	TPTC_ERRINT_PO		TPTC2 error
	TPTC_LERRINT_PO	X	
	TPTC_INT_PO		TPTC2 completion
	TPTC_LINT_PO		
TPTC 3	TPTC_ERRINT_PO		TPTC3 error
	TPTC_LERRINT_PO	X	
	TPTC_INT_PO		TPTC3 completion
	TPTC_LINT_PO		
DDR EMIF4d 0	SYS_ERR_INTR		EMIF error
	SYS_ERR_INTR_PEND_N	X	
DDR EMIF4d 1	SYS_ERR_INTR		
	SYS_ERR_INTR_PEND_N	X	
GPMC	GPMC_SINTERRUPT	X	GPMC interrupt
UART 0	NIRQ	X	UART and IrDA 0 interrupt
UART 1	NIRQ	X	UART and IrDA 1 interrupt
UART 2	NIRQ	X	UART and IrDA 2 interrupt

Table 8-18. Interrupts By Module (continued)

MODULE	INTERRUPT	DESTINATION	DESCRIPTION
		Cortex™-A8	
Timer1	POINTR_REQ		32-bit Timer1 interrupt
	POINTR_PEND	X	
Timer2	POINTR_REQ		32-bit Timer2 interrupt
	POINTR_PEND	X	
Timer3	POINTR_REQ		32-bit Timer3 interrupt
	POINTR_PEND	X	
Timer4	POINTR_REQ		32-bit Timer4 interrupt
	POINTR_PEND	X	
Timer5	POINTR_REQ		32-bit Timer5 interrupt
	POINTR_PEND	X	
Timer6	POINTR_REQ		32-bit Timer6 interrupt
	POINTR_PEND	X	
Timer7	POINTR_REQ		32-bit Timer7 interrupt
	POINTR_PEND	X	
WDTimer1	PO_INT_REQ	X	Watchdog Timer
I2C0	POINTRREQ		I2C Bus interrupt
	POINTRPEND	X	
I2C1	POINTRREQ		
	POINTRPEND	X	
SPI	SINTERRUPTN	X	SPI Interrupt
SDIO	IRQOQN	X	SDIO interrupt
McASP 0	MCASP_X_INTR_REQ		McASP 0 Transmit interrupt
	MCASP_X_INTR_PEND	X	
	MCASP_R_INTR_REQ		McASP 0 Receive interrupt
	MCASP_R_INTR_PEND	X	
McASP 1	MCASP_X_INTR_REQ		McASP 1 Transmit interrupt
	MCASP_X_INTR_PEND	X	
	MCASP_R_INTR_REQ		McASP 1 Receive interrupt
	MCASP_R_INTR_PEND	X	
McASP 2	MCASP_X_INTR_REQ		McASP 2 Transmit interrupt
	MCASP_X_INTR_PEND	X	
	MCASP_R_INTR_REQ		McASP 2 Receive interrupt
	MCASP_R_INTR_PEND	X	
McBSP	PORRINTERRUPT		McBSP Receive Int (legacy mode)
	PORXINTERRUPT		McBSP Transmit Int (legacy mode)
	PORROVFLINTERRUPT		McBSP Receive Overflow Int (legacy mode)
	PORCOMMONIRQ	X	McBSP Common Int
RTC	TIMER_INTR_REQ		Timer interrupt
	TIMER_INTR_PEND	X	
	ALARM_INTR_REQ		Alarm interrupt
	ALARM_INTR_PEND	X	
GPIO 0	POINTRREQ1		GPIO 0 interrupt 1
	POINTRPEND1	X	
	POINTRREQ2		GPIO 0 interrupt 2
	POINTRPEND2	X	

Copyright © 2010–2015, Texas Instruments Incorporated

Table 8-18. Interrupts By Module (continued)

MODULE	INTERRUPT	DESTINATION	DESCRIPTION
		Cortex™-A8	
GPIO 1	POINTRREQ1		GPIO 1 interrupt 1
	POINTRPEND1	X	
	POINTRREQ2		GPIO 1 interrupt 2
	POINTRPEND2	X	
PRCM			Reserved
HDVPSS	INTR0_INTR		Intr0 pulse version
	INTR0_INTR_PEND_N	X	Intr0 level version
	INTR1_INTR		Intr1 pulse version
	INTR1_INTR_PEND_N		Intr1 level version
	INTR2_INTR		Intr2 pulse version
	INTR2_INTR_PEND_N		Intr2 level version
	INTR3_INTR		Intr3 pulse version
	INTR3_INTR_PEND_N		Intr3 level version
SGX530 (AM3894 only)	THALIAIRQ	X	Error in the IMG bus
	TARGETSINTERRUPT		Target slave error interrupt
	INITMINTERRUPT		Initiator master error interrupt
HDMI 1.3 Transmit	INTR0_INTR		Intr0 pulse version
	INTR0_INTR_PEND_N	X	Intr0 level version
SmartReflex0	INTRREQ		SVT SmartReflex interrupt pulse version
	INTRPEND	X	SVT SmartReflex interrupt level version
SmartReflex1	INTRREQ		HVT SmartReflex interrupt pulse version
	INTRPEND	X	HVT SmartReflex interrupt level version
PBIST			Reserved
Mailbox	MAIL_U0_IRQ	X	Mailbox interrupt
	MAIL_U1_IRQ		
	MAIL_U2_IRQ		
	MAIL_U3_IRQ		
NMI	NMI_INT	X	NMI Interrupt
Infrastructure	L3_DBG_IRQ	X	L3 debug error
	L3_APP_IRQ	X	L3 application error
DMM	DMM_HIGH_INTRPEND	X	PAT fault
Cortex™-A8 SS	COMMTX	X	ARM ICECrusher interrupt
	COMMRX	X	
	BENCH	X	ARM NPMUIRQ
	ELM_IRQ	X	Error Location process completion
	EMUINT	X	E2ICE interrupt

8.4.2 Cortex™-A8 Interrupts

The Cortex™-A8 Interrupt Controller (AINTC) takes ARM device interrupts and maps them to either the interrupt request (IRQ) or fast interrupt request (FIQ) of the ARM with an individual priority level. The AINTC interrupts must be active low-level interrupts.

The AINTC is responsible for prioritizing all service requests from the system peripherals directed to the Cortex™-A8 SS and generating either nIRQ or nFIQ to the host. The type of the interrupt (nIRQ or nFIQ) and the priority of the interrupt inputs are programmable. It has the capability to handle up to 128 requests which can be steered or prioritized as nFIQ or nIRQ interrupt requests.

The general features of the AINTC are:

- Up to 128 level-sensitive interrupts inputs
- Individual priority for each interrupt input
- Each interrupt can be steered to nFIQ or nIRQ
- Independent priority sorting for nFIQ and nIRQ.

Table 8-19. Cortex™-A8 Interrupt Controller Connections

INTERRUPT NUMBER	ACRONYM	SOURCE
0	EMUINT	Internal
1	COMMTX	Internal
2	COMMRX	Internal
3	BENCH	Internal
4	ELM_IRQ	ELM
5-6	-	
7	NMI	External Pin
8	-	
9	L3DEBUG	L3
10	L3APPINT	L3
11	-	
12	EDMACOMPINT	TPCC
13	EDMAMPERR	TPCC
14	EDMAERRINT	TPCC
15	-	
16	SATAINT	SATA
17	USBSSINT	USBSS
18	USBINT0	USBSS
19	USBINT1	USBSS
20-33	-	
34	USBWAKEUP	USBSS
35	PCIeWAKEUP	PCIe
36	DSSINT	HDVPSS
37	GFXINT	SGX530 (AM3894 only)
38	HDMIINT	HDMI
39	-	
40	MACRXTHR0	EMAC0
41	MACRXINT0	EMAC0
42	MACTXINT0	EMAC0
43	MACMISC0	EMAC0

Copyright © 2010–2015, Texas Instruments Incorporated

Table 8-19. Cortex™-A8 Interrupt Controller Connections (continued)

INTERRUPT NUMBER	ACRONYM	SOURCE
44	MACRXTHR1	EMAC1
45	MACRXINT1	EMAC1
46	MACTXINT1	EMAC1
47	MACMISC1	EMAC1
48	PCIINT0	PCIe
49	PCIINT1	PCIe
50	PCIINT2	PCIe
51	PCIINT3	PCIe
52-63	-	
64	SDINT	SD, SDIO
65	SPIINT	SPI
66	-	
67	TINT1	Timer1
68	TINT2	Timer2
69	TINT3	Timer3
70	I2CINT0	I2C0
71	I2CINT1	I2C1
72	UARTINT0	UART0
73	UARTINT1	UART1
74	UARTINT2	UART2
75	RTCINT	RTC
76	RTCALARMINT	RTC
77	MBINT	Mailbox
78-79	-	
80	MCATXINT0	McASP0
81	MCARXINT0	McASP0
82	MCATXINT1	McASP1
83	MCARXINT1	McASP1
84	MCATXINT2	McASP2
85	MCARXINT2	McASP2
86	MCBSPINT	McBSP
87-90	-	
91	WDTINT	WDTIMER1
92	TINT4	Timer4
93	TINT5	Timer5
94	TINT6	Timer6
95	TINT7	Timer7
96	GPIOINT0A	GPIO 0
97	GPIOINT0B	GPIO 0
98	GPIOINT1A	GPIO 1
99	GPIOINT1B	GPIO 1
100	GPMCINT	GPMC
101	DDRERR0	DDR EMIF0
102	DDRERR1	DDR EMIF1
103-111	-	
112	TCERRINT0	TPTC0
113	TCERRINT1	TPTC1

Copyright © 2010–2015, Texas Instruments Incorporated

Table 8-19. Cortex™-A8 Interrupt Controller Connections (continued)

INTERRUPT NUMBER	ACRONYM	SOURCE
114	TCERRINT2	TPTC2
115	TCERRINT3	TPTC3
116-119	-	
120	SMRFLX0	SmartReflex0
121	SMRFLX1	SmartReflex1
123	-	
124	DMMINT	DMM
125-127	-	

Copyright © 2010–2015, Texas Instruments Incorporated

9 Peripheral Information and Timings

9.1 Parameter Information

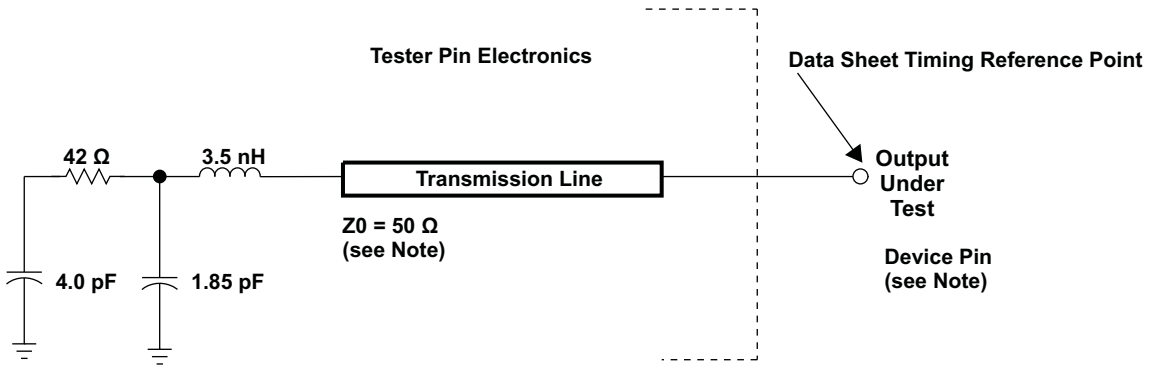

NOTE: The data sheet provides timing at the device pin. For output timing analysis, the tester pin electronics and its transmission line effects must be taken into account. A transmission line with a delay of 2 ns can be used to produce the desired transmission line effect. The transmission line is intended as a load only. It is not necessary to add or subtract the transmission line delay (2 ns) from the data sheet timings.

Input requirements in this data sheet are tested with an input slew rate of < 4 Volts per nanosecond (4 V/ns) at the device pin.

Figure 9-1. Test Load Circuit for AC Timing Measurements

The load capacitance value stated is only for characterization and measurement of AC timing signals. This load capacitance value does not indicate the maximum load the device is capable of driving.

9.1.1 1.8-V and 3.3-V Signal Transition Levels

All input and output timing parameters are referenced to V_{ref} for both "0" and "1" logic levels. For 3.3-V IO, V_{ref} = 1.5 V. For 1.8-V IO, V_{ref} = 0.9 V.

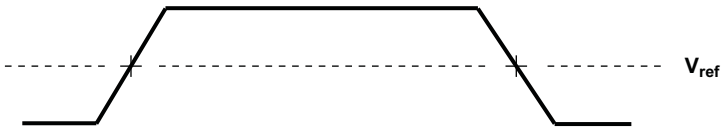

Figure 9-2. Input and Output Voltage Reference Levels for AC Timing Measurements

All rise and fall transition timing parameters are referenced to V_{IL} MAX and V_{IH} MIN for input clocks, V_{OL} MAX and V_{OH} MIN for output clocks.

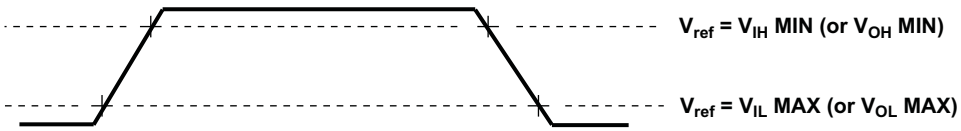

Figure 9-3. Rise and Fall Transition Time Voltage Reference Levels

9.1.2 3.3-V Signal Transition Rates

All timings are tested with an input edge rate of 4 volts per nanosecond (4 V per ns).

9.1.3 Timing Parameters and Board Routing Analysis

The timing parameter values specified in this data manual do *not* include delays by board routings. As a good board design practice, such delays must *always* be taken into account. Timing values may be adjusted by increasing or decreasing such delays. TI recommends utilizing the available IO buffer information specification (IBIS) models to analyze the timing characteristics correctly. To properly use IBIS models to attain accurate timing analysis for a given system, see the *Using IBIS Models for Timing Analysis* application report (literature number SPRA839). If needed, external logic hardware such as buffers may be used to compensate any timing differences.

For the DDR2 and DDR3, PCIe, SATA, USB, and HDMI interfaces, IBIS models are not used for timing specification. TI provides, in this document, a PCB routing rule solution for each interface that describes the routing rules used to ensure the interface timings are met. Video DAC guidelines (Section 9.10.2) are also included to discuss important layout considerations.

9.2 Recommended Clock and Control Signal Transition Behavior

All clocks and control signals ***must*** transition between V_{IH} and V_{IL} (or between V_{IL} and V_{IH}) in a monotonic manner.

Copyright © 2010–2015, Texas Instruments Incorporated

9.3 DDR2 and DDR3 Memory Controller

The device has a dedicated interface to DDR3 and DDR2 SDRAM. It supports JEDEC standard-compliant DDR2 and DDR3 SDRAM devices with the following features:

- 16-bit or 32-bit data path to external SDRAM memory
- Memory device capacity: 64Mb, 128Mb, 256Mb, 512Mb, 1Gb, 2Gb and 4Gb (x16-bit only) devices
- Support for two independent chip selects, with their corresponding register sets, and independent page tracking
- Two interfaces with associated DDR2 and DDR3 PHYs
- Dynamic memory manager allows for interleaving of data between the two DDR interfaces.

For details on the DDR2 and DDR3 Memory Controller, see the DDR2 and DDR3 Memory Controller chapter in the *AM389x Sitara ARM Processors Technical Reference Manual* (literature number SPRUGX7).

9.3.1 DDR2 Routing Specifications

9.3.1.1 Board Designs

TI only supports board designs that follow the specifications outlined in this document. The switching characteristics and the timing diagram for the DDR2 memory controller are shown in Table 9-1 and Figure 9-4.

Table 9-1. Switching Characteristics Over Recommended Operating Conditions for DDR2 Memory Controller

NO.	PARAMETER		-1G		UNIT
			MIN	MAX	
1	$t_{c(DDR_CLK)}$	Cycle time, DDR_CLK	2.5	8	ns

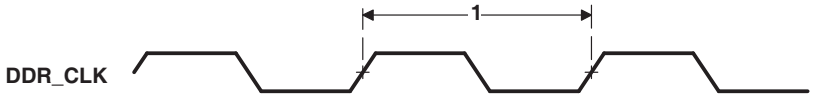

Figure 9-4. DDR2 Memory Controller Clock Timing

9.3.1.2 DDR2 Interface

This section provides the timing specification for the DDR2 interface as a PCB design and manufacturing specification. The design rules constrain PCB trace length, PCB trace skew, signal integrity, cross-talk, and signal timing. These rules, when followed, result in a reliable DDR2 memory system without the need for a complex timing closure process. For more information regarding the guidelines for using this DDR2 specification, see *Understanding TI's PCB Routing Rule-Based DDR2 Timing Specification* Application Report (SPRAAV0).

9.3.1.2.1 DDR2 Interface Schematic

Figure 9-5 shows the DDR2 interface schematic for a x32 DDR2 memory system. In Figure 9-6 the x16 DDR2 system schematic is identical except that the high-word DDR2 device is deleted.

When not using a DDR2 interface, the proper method of handling the unused pins is to tie off the DQS pins by pulling the non-inverting DQS pin to the DDR_1V8 supply via a 1k-Ω resistor and pulling the inverting $\overline{DQS}$ pin to ground via a 1k-Ω resistor. This needs to be done for each byte not used. Also, include the 50-Ω pulldown for DDR[x]_VTP. All other DDR interface pins can be left unconnected. Note that the supported modes for use of the DDR EMIF are 32 bits wide, 16 bits wide, or not used.

Copyright © 2010–2015, Texas Instruments Incorporated

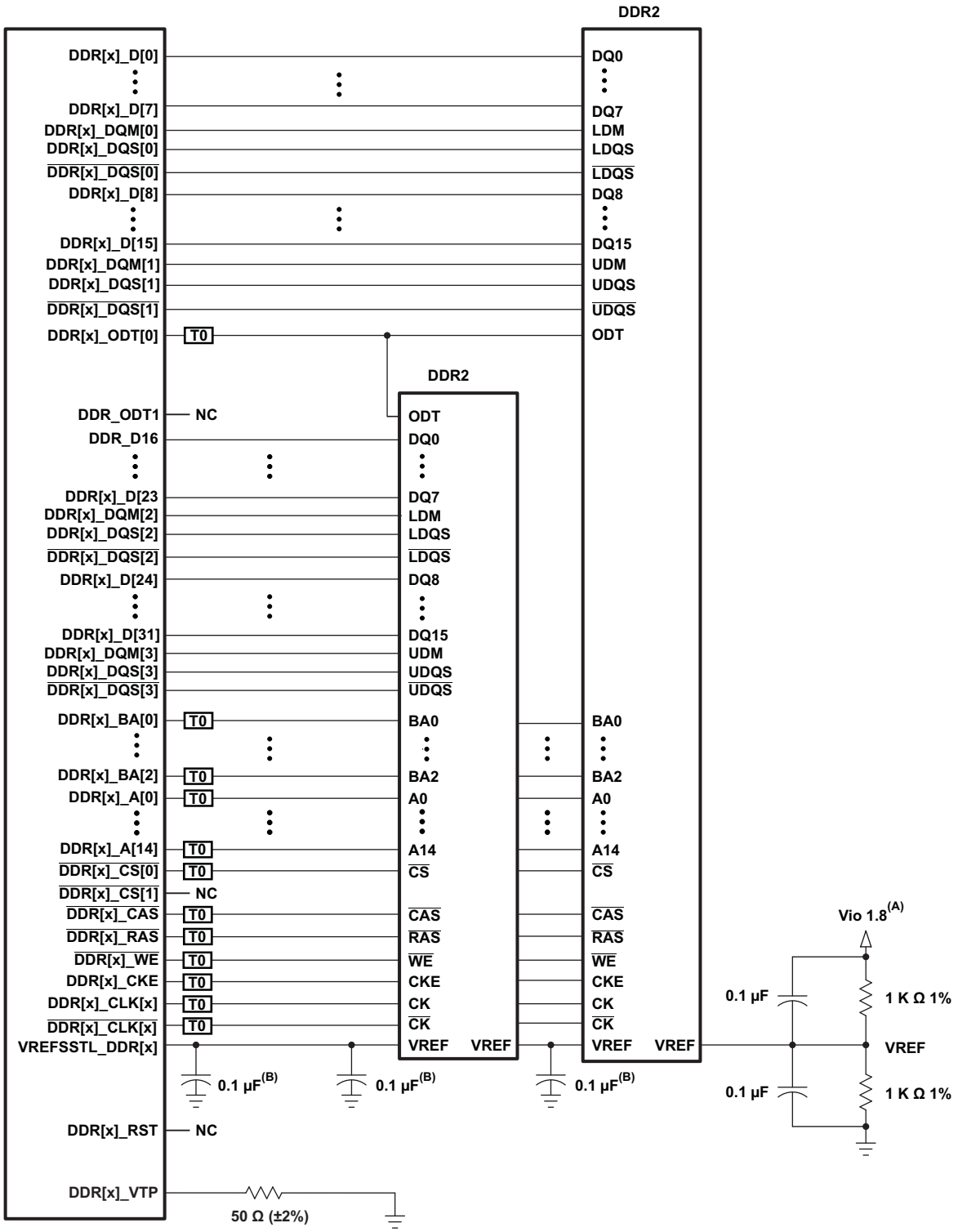

T0 Termination is required. See terminator comments.

A. Vio1.8 is the power supply for the DDR2 memories and the AM389x DDR2 interface.

B. One of these capacitors can be eliminated if the divider and its capacitors are placed near a VREF pin.

Figure 9-5. 32-Bit DDR2 High-Level Schematic

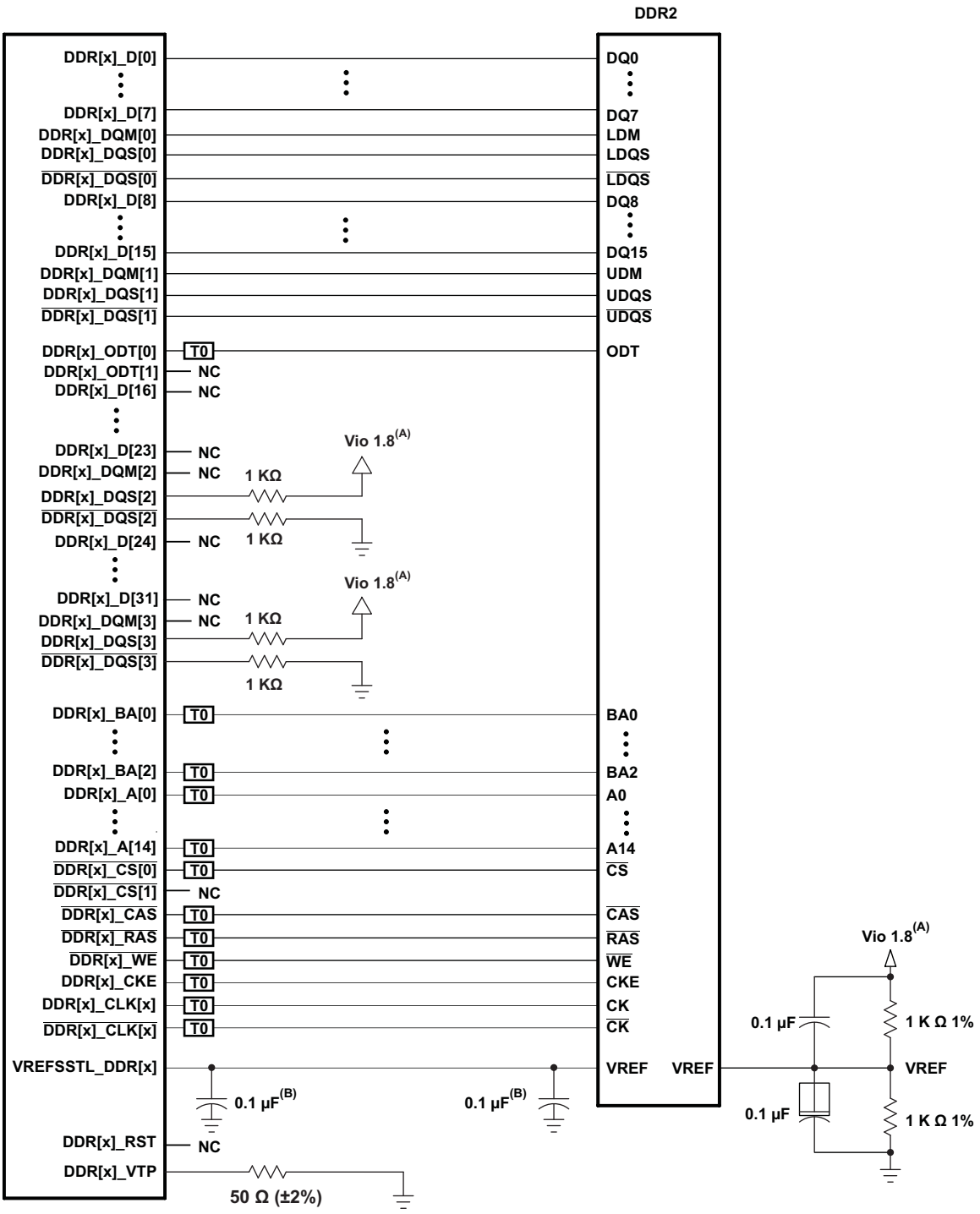

T0 Termination is required. See terminator comments.

A. Vio1.8 is the power supply for the DDR2 memories and the AM389x DDR2 interface.

B. One of these capacitors can be eliminated if the divider and its capacitors are placed near a VREF pin.

Figure 9-6. 16-Bit DDR2 High-Level Schematic

Copyright © 2010–2015, Texas Instruments Incorporated

9.3.1.2.2 Compatible JEDEC DDR2 Devices

Table 9-2 shows the parameters of the JEDEC DDR2 devices that are compatible with this interface. Generally, the DDR2 interface is compatible with x16 DDR2-800 speed grade DDR2 devices.

Table 9-2. Compatible JEDEC DDR2 Devices

NO.	PARAMETER	MIN	MAX	UNIT
1	JEDEC DDR2 device speed grade(1)	DDR2-800		
2	JEDEC DDR2 device bit width	x16	x16	Bits
3	JEDEC DDR2 device count(2)	1	2	Devices
4	JEDEC DDR2 device ball count(3)	84	92	Balls

(1) Higher DDR2 speed grades are supported due to inherent JEDEC DDR2 backwards compatibility.
(2) One DDR2 device is used for a 16-bit DDR2 memory system. Two DDR2 devices are used for a 32-bit DDR2 memory system.
(3) The 92-ball devices are retained for legacy support. New designs will migrate to 84-ball DDR2 devices. Electrically, the 92- and 84-ball DDR2 devices are the same.

9.3.1.2.3 PCB Stackup

The minimum stackup required for routing the AM389x device is a six-layer stackup as shown in Table 9-3. Additional layers may be added to the PCB stackup to accommodate other circuitry or to reduce the size of the PCB footprint.

Table 9-3. Minimum PCB Stackup

LAYER	TYPE	DESCRIPTION
1	Signal	Top routing mostly horizontal
2	Plane	Ground
3	Plane	Power
4	Signal	Internal routing
5	Plane	Ground
6	Signal	Bottom routing mostly vertical

Complete stackup specifications are provided in Table 9-4.

Table 9-4. PCB Stackup Specifications

NO.	PARAMETER	MIN	TYP	MAX	UNIT
1	PCB routing and plane layers	6			
2	Signal routing layers	3			
3	Full ground layers under DDR2 routing region	2			
4	Number of ground plane cuts allowed within DDR routing region			0	
5	Number of ground reference planes required for each DDR2 routing layer	1			
6	Number of layers between DDR2 routing layer and reference ground plane			0	
7	PCB routing feature size		4		Mils
8	PCB trace width, w		4		Mils
9	PCB BGA escape via pad size (1)		18	20	Mils
10	PCB BGA escape via hole size (1)		10		Mils
11	Processor BGA pad size		0.3		mm
12	DDR2 device BGA pad size (2)				
13	Single-ended impedance, Zo	50		75	Ω
14	Impedance control (3)	Z-5	Z	Z+5	Ω

(1) A 20/10 via may be used if enough power routing resources are available. An 18/10 via allows for more flexible power routing to the processor.
(2) For the DDR2 device BGA pad size, see the DDR2 device manufacturer documentation.
(3) Z is the nominal singled-ended impedance selected for the PCB specified by item 13.

Copyright © 2010–2015, Texas Instruments Incorporated

9.3.1.2.4 Placement

Figure 9-7 shows the required placement for the processor as well as the DDR2 devices. The dimensions for this figure are defined in Table 9-5. The placement does not restrict the side of the PCB on which the devices are mounted. The ultimate purpose of the placement is to limit the maximum trace lengths and allow for proper routing space. For a 16-bit DDR memory system, the high-word DDR2 device is omitted from the placement.

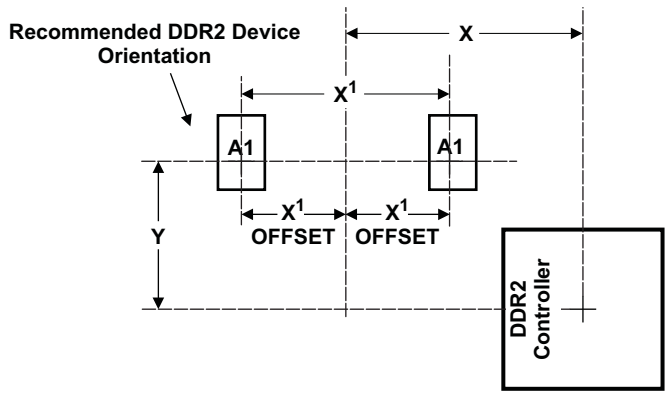

Figure 9-7. AM389x Device and DDR2 Device Placement

Table 9-5. Placement Specifications

NO.	PARAMETER	MIN	MAX	UNIT
1	X + Y (1) (2)		1660	Mils
2	X' (1) (2)		1280	Mils
3	X' Offset (1) (2) (3)		650	Mils
4	DDR2 keepout region (4)			
5	Clearance from non-DDR2 signal to DDR2 keepout region (5)	4		w

(1) For dimension definitions, see Figure 9-5.
(2) Measurements from center of processor to center of DDR2 device.
(3) For 16-bit memory systems, it is recommended that X' offset be as small as possible.
(4) DDR2 keepout region to encompass entire DDR2 routing area.
(5) Non-DDR2 signals allowed within DDR2 keepout region provided they are separated from DDR2 routing layers by a ground plane.

9.3.1.2.5 DDR2 Keepout Region

The region of the PCB used for the DDR2 circuitry must be isolated from other signals. The DDR2 keepout region is defined for this purpose and is shown in Figure 9-8. The size of this region varies with the placement and DDR routing. Additional clearances required for the keepout region are shown in Table 9-5.

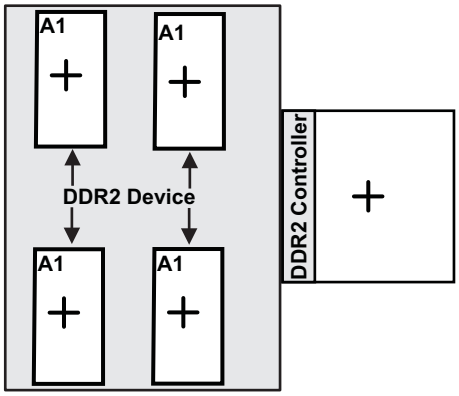

Figure 9-8. DDR2 Keepout Region

NOTE

The region shown in should encompass all the DDR2 circuitry and varies depending on placement. Non-DDR2 signals should not be routed on the DDR signal layers within the DDR2 keepout region. Non-DDR2 signals may be routed in the region, provided t hey are routed on layers separated from DDR2 signal layers by a ground layer. No breaks should be allowed in the reference ground layers in this region. In addition, the 1.8V power plane should cover the entire keepout region. Routes for the two DDR interfaces must be separated by at least 4x; the more separation, the better.

9.3.1.2.6 Bulk Bypass Capacitors

Bulk bypass capacitors are required for moderate speed bypassing of the DDR2 and other circuitry. Table 9-6 contains the minimum numbers and capacitance required for the bulk bypass capacitors. Note that this table only covers the bypass needs of the DDR2 interfaces and DDR2 device. Additional bulk bypass capacitance may be needed for other circuitry.

Table 9-6. Bulk Bypass Capacitors

No.	Parameter	Min	Max	Unit
1	DVDD18 bulk bypass capacitor count(1)	6		Devices
2	DVDD18 bulk bypass total capacitance	60		µF
3	DDR#1 bulk bypass capacitor count(1)	1		Devices
4	DDR#1 bulk bypass total capacitance(1)	10		µF
5	DDR#2 bulk bypass capacitor count(2)	1		Devices
6	DDR#2 bulk bypass total capacitance(1)(2)	10		µF

(1) These devices should be placed near the device they are bypassing, but preference should be given to the placement of the high-speed (HS) bypass capacitors. Use half of these capacitors for DDR[0] and half for DDR[1].
(2) Only used on 32-bit wide DDR2 memory systems.

Copyright © 2010–2015, Texas Instruments Incorporated

9.3.1.2.7 High-Speed Bypass Capacitors

High-speed (HS) bypass capacitors are critical for proper DDR2 interface operation. It is particularly important to minimize the parasitic series inductance of the HS bypass capacitors, processor DDR power, and processor DDR ground connections. Table 9-7 contains the specification for the HS bypass capacitors as well as for the power connections on the PCB.

Table 9-7. High-Speed Bypass Capacitors

NO.	PARAMETER	MIN	MAX	UNIT
1	HS bypass capacitor package size(1)		0402	10 Mils
2	Distance from HS bypass capacitor to device being bypassed		250	Mils
3	Number of connection vias for each HS bypass capacitor(2)	2		Vias
4	Trace length from bypass capacitor contact to connection via	1	30	Mils
5	Number of connection vias for each processor power and ground ball	1		Vias
6	Trace length from processor power and ground ball to connection via		35	Mils
7	Number of connection vias for each DDR2 device power and ground ball	1		Vias
8	Trace length from DDR2 device power and ground ball to connection via		35	Mils
9	DVDD18 HS bypass capacitor count(3)(4)	40		Devices
10	DVDD18 HS bypass capacitor total capacitance(4)	2.4		µF
11	DDR device HS bypass capacitor count(3)(5)	8		Devices
12	DDR device HS bypass capacitor total capacitance(5)	0.4		µF

(1) LxW, 10-mil units; for example, a 0402 is a 40x20-mil surface-mount capacitor.
(2) An additional HS bypass capacitor can share the connection vias only if it is mounted on the opposite side of the board.
(3) These devices should be placed as close as possible to the device being bypassed.
(4) Use half of these capacitors for DDR[0] and half for DDR[1].
(5) Per DDR device.

9.3.1.2.8 Net Classes

Table 9-8 lists the clock net classes for the DDR2 interface. Table 9-9 lists the signal net classes, and associated clock net classes, for the signals in the DDR2 interface. These net classes are used for the termination and routing rules that follow.

Table 9-8. Clock Net Class Definitions

CLOCK NET CLASS	PROCESSOR PIN NAMES
CK	DDR[x]_CLK[x] and $\overline{\text{DDR[x]_CLK[x]}}$
DQS0	DDR[x]_DQS[0] and $\overline{\text{DDR[x]_DQS[0]}}$
DQS1	DDR[x]_DQS[1] and $\overline{\text{DDR[x]_DQS[1]}}$
DQS2(1)	DDR[x]_DQS[2] and $\overline{\text{DDR[x]_DQS[2]}}$
DQS3(1)	DDR[x]_DQS[3] and $\overline{\text{DDR[x]_DQS[3]}}$

(1) Only used on 32-bit wide DDR2 memory systems.

Table 9-9. Signal Net Class Definitions

SIGNAL NET CLASS	ASSOCIATED CLOCK NET CLASS	PROCESSOR PIN NAMES
ADDR_CTRL	CK	DDR[x]_BA[2:0], DDR[x]_A[14:0], DDR[x]_CS[x], DDR[x]_CAS, DDR[x]_RAS, DDR[x]_WE, DDR[x]_CKE, DDR[x]_ODT[x]
DQ0	DQS0	DDR[x]_D[7:0], DDR[x]_DQM[0]
DQ1	DQS1	DDR[x]_D[15:8], DDR[x]_DQM[1]
DQ2 (1)	DQS2	DDR[x]_D[23:16], DDR[x]_DQM[2]
DQ3 (1)	DQS3	DDR[x]_D[31:24], DDR[x]_DQM[3]

(1) Only used on 32-bit wide DDR2 memory systems.

9.3.1.2.9 DDR2 Signal Termination

Signal terminators are required in CK and ADDR_CTRL net classes. Serial terminators may be used on data lines to reduce EMI risk; however, serial terminations are the only type permitted. ODT's are integrated on the data byte net classes. They should be enabled to ensure signal integrity.Table 9-10 shows the specifications for the series terminators.

Table 9-10. DDR2 Signal Terminations

NO.	PARAMETER	MIN	TYP	MAX	UNIT
1	CK net class (1) (2)	0		10	Ω
2	ADDR_CTRL net class (1) (3) (4) (2)	0	22	Zo	Ω
3	Data byte net classes (DQS0-DQS3, DQ0-DQ3) (5)	0		0	Ω

(1) Only series termination is permitted, parallel or SST specifically disallowed on board.
(2) Only required for EMI reduction.
(3) Terminator values larger than typical only recommended to address EMI issues.
(4) Termination value should be uniform across net class.
(5) No external terminations allowed for data byte net classes. ODT is to be used.

9.3.1.2.10 VREFSSTL_DDR Routing

VREFSSTL_DDR is used as a reference by the input buffers of the DDR2 memories as well as the processor. VREF is intended to be half the DDR2 power supply voltage and should be created using a resistive divider as shown in Figure 9-6. Other methods of creating VREF are not recommended. Figure 9-9 shows the layout guidelines for VREF.

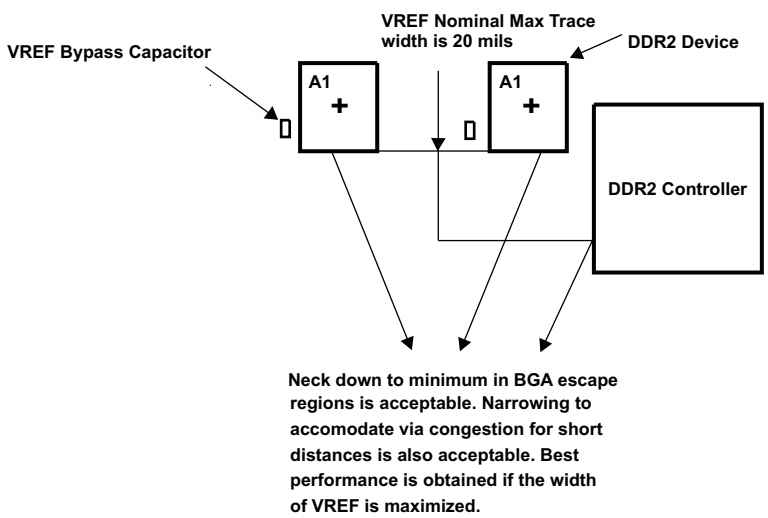

Figure 9-9. VREF Routing and Topology

Copyright © 2010–2015, Texas Instruments Incorporated

9.3.1.3 DDR2 CK and ADDR_CTRL Routing

Figure 9-10 shows the topology of the routing for the CK and ADDR_CTRL net classes. The route is a balanced *T* as it is intended that the length of segments B and C be equal. In addition, the length of A (A'+A") should be maximized.

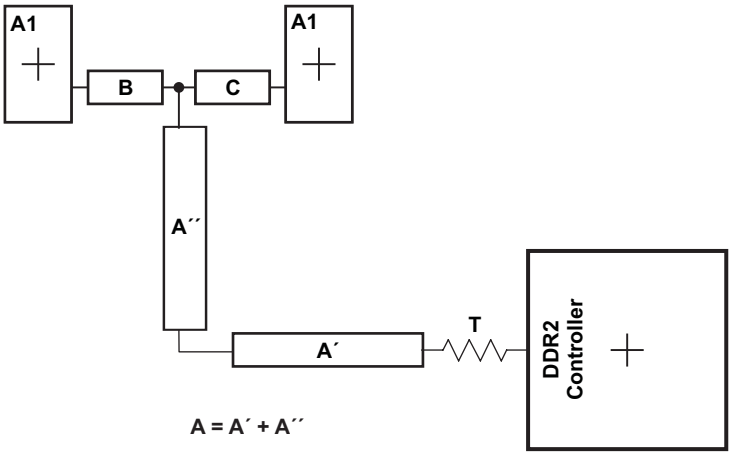

Figure 9-10. CK and ADDR_CTRL Routing and Topology

Table 9-11. CK and ADDR_CTRL Routing Specification (1)

NO.	PARAMETER	MIN	TYP	MAX	UNIT
1	Center-to-center CK-$\overline{CK}$ spacing			2w	
2	CK and $\overline{CK}$ skew(1)			25	Mils
3	CK B-to-C skew length mismatch			25	Mils
4	Center-to-center CK to other DDR2 trace spacing(2)	4w			
5	CK and ADDR_CTRL nominal trace length(3)	CACLM-50	CACLM	CACLM+50	Mils
6	ADDR_CTRL-to-CK skew length mismatch			100	Mils
7	ADDR_CTRL-to-ADDR_CTRL skew length mismatch			100	Mils
8	Center-to-center ADDR_CTRL to other DDR2 trace spacing(2)	4w			
9	Center-to-center ADDR_CTRL to other ADDR_CTRL trace spacing(2)	3w			
10	ADDR_CTRL B-to-C skew length mismatch			100	Mils

(1) The length of segment A=A'+A″ as shown in Figure 9-10.
(2) Center-to-center spacing is allowed to fall to minimum (w) for up to 500 mils of routed length to accommodate BGA escape and routing congestion.
(3) CACLM is the longest Manhattan distance of the CK and ADDR_CTRL net classes.

Figure 9-11 shows the topology and routing for the DQS and DQ net classes; the routes are point to point. Skew matching across bytes is not needed nor recommended.

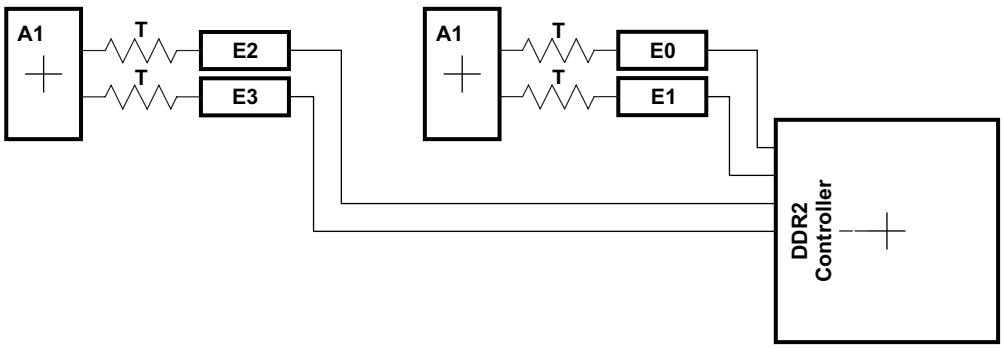

Figure 9-11. DQS and DQ Routing and Toplogy

Table 9-12. DQS and DQ Routing Specification

NO.	PARAMETER	MIN	TYP	MAX	UNIT
1	Center-to-center DQS-DQSn spacing in E0|E1|E2|E3			2w	
2	DQS-DQSn skew in E0|E1|E2|E3			25	Mils
3	Center-to-center DQS to other DDR2 trace spacing (1)	4w			
4	DQS and DQ nominal trace length (2)(3)(4)	DQLM-50	DQLM	DQLM+50	Mils
5	DQ-to-DQS skew length mismatch (2)(3)(4)			100	Mils
6	DQ-to-DQ skew length mismatch (2)(3)(4)			100	Mils
7	DQ-to-DQ and DQS via count mismatch (2)(3)(4)			1	Vias
8	Center-to-center DQ to other DDR2 trace spacing (1)(5)	4w			
9	Center-to-center DQ to other DQ trace spacing (1)(6)(7)	3w			
10	DQ and DQS E skew length mismatch (2)(3)(4)			100	Mils

(1) Center-to-center spacing is allowed to fall to minimum (w) for up to 500 mils of routed length to accommodate BGA escape and routing congestion.
(2) A 16-bit DDR memory system has two sets of data net classes; one for data byte 0, and one for data byte 1, each with an associated DQS (2 DQSs) per DDR EMIF used.
(3) A 32-bit DDR memory system has four sets of data net classes; one each for data bytes 0 through 3, and each associated with a DQS (4 DQSs) per DDR EMIF used.
(4) There is no need, and it is not recommended, to skew match across data bytes; that is, from DQS0 and data byte 0 to DQS1 and data byte 1.
(5) DQs from other DQS domains are considered *other DDR2 trace*.
(6) DQs from other data bytes are considered *other DDR2 trace*.
(7) DQLM is the longest Manhattan distance of each of the DQS and DQ net classes.

9.3.2 DDR3 Routing Specifications

9.3.2.1 Board Designs

TI only supports board designs utilizing DDR3 memory that follow the specifications in this document. The switching characteristics and timing diagram for the DDR3 memory controller are shown in Table 9-13 and Figure 9-12.

Table 9-13. Switching Characteristics Over Recommended Operating Conditions for DDR3 Memory Controller

NO.	PARAMETER	-1G		UNIT
		MIN	MAX	
1	$t_{c(DDR_CLK)}$ Cycle time, DDR_CLK	1.25	3.3 (1)	ns

(1) This is the absolute maximum the clock period can be. Actual maximum clock period may be limited by DDR3 speed grade and operating frequency (see the DDR3 memory device data sheet).

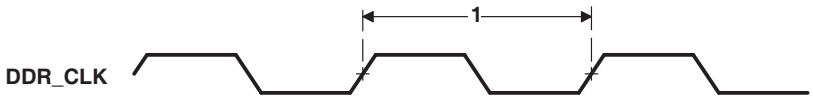

Figure 9-12. DDR3 Memory Controller Clock Timing

9.3.2.1.1 DDR3 versus DDR2

This specification only covers AM389x processor PCB designs that utilize DDR3 memory. Designs using DDR2 memory should use the PCB design specifications for DDR2 memory in Section 9.3.1. While similar, the two memory systems have different requirements. It is currently not possible to design one PCB that covers both DDR2 and DDR3.

9.3.2.2 DDR3 Device Combinations

Since there are several possible combinations of device counts and single- or dual-side mounting, Table 9-14 summarizes the supported device configurations.

Copyright © 2010–2015, Texas Instruments Incorporated

Table 9-14. Supported DDR3 Device Combinations(1)

NUMBER OF DDR3 DEVICES	DDR3 DEVICE WIDTH (BITS)	MIRRORED?	DDR3 EMIF WIDTH (BITS)
1	16	N	16
2	8	Y(2)	16
2	16	N	32
2	16	Y(2)	32
4	8	N	32
4	8	Y(3)	32

(1) This table is per EMIF.
(2) Two DDR3 devices are mirrored when one device is placed on the top of the board and the second device is placed on the bottom of the board.
(3) This is two mirrored pairs of DDR3 devices.

9.3.2.2.1 DDR3 EMIFs

The processor contains two separate DDR3 EMIFs. This specification covers one of these EMIFs (DDR[0]) and, thus, needs to be implemented twice, once for each EMIF. The PCB layout generally turns out to be a semi-mirror with DDR[1] being a flipped version of DDR[0]; the only exception being the DDR3 devices themselves are not flipped unless mounted on opposite sides of the PCB. Requirements are identical between the two EMIFs.

9.3.2.3 DDR3 Interface Schematic

9.3.2.3.1 32-Bit DDR3 Interface

The DDR3 interface schematic varies, depending upon the width of the DDR3 devices used and the width of the bus used (16 or 32 bits). General connectivity is straightforward and very similar. 16-bit DDR devices look like two 8-bit devices. Figure 9-13 and Figure 9-14 show the schematic connections for 32-bit interfaces using x16 devices.

9.3.2.3.2 16-Bit DDR3 Interface

Note that the 16-bit wide interface schematic is practically identical to the 32-bit interface (see Figure 9-13 and Figure 9-14); only the high-word DDR memories are removed and the unused DQS inputs are tied off. The processor DDR[x]_DQS[2] and DDR[x]_DQS[3] pins should be pulled to the DDR supply via 1-kΩ resistors. Similarly, the $\overline{\text{DDR[x]_DQS[2]}}$ and $\overline{\text{DDR[x]_DQS[3]}}$ pins should be pulled to ground via 1-kΩ resistors.

When not using a DDR interface, the proper method of handling the unused pins is to tie off the DQS pins by pulling the non-inverting DQS pin to the DDR_1V5 supply via a 1k-Ω resistor and pulling the inverting DQSn pin to ground via a 1k-Ω resistor. This needs to be done for each byte not used. Also, include the 50-Ω pulldown for DDR[x]_VTP. All other DDR interface pins can be left unconnected. Note that the supported modes for use of the DDR EMIF are 32 bits wide, 16 bits wide, or not used.

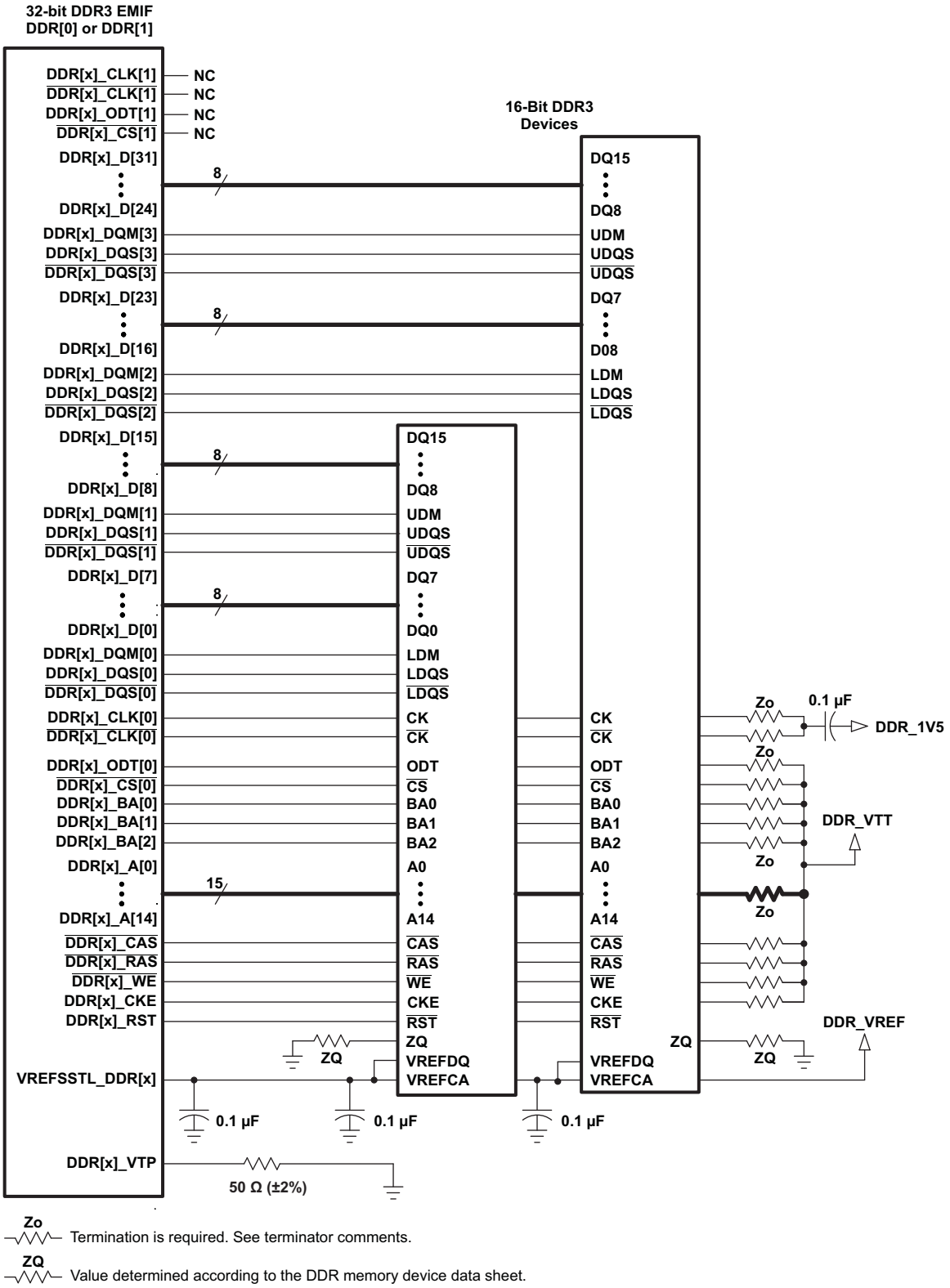

Figure 9-13. 32-Bit, One-Bank DDR3 Interface Schematic Using Two 16-Bit DDR3 Devices

Copyright © 2010–2015, Texas Instruments Incorporated

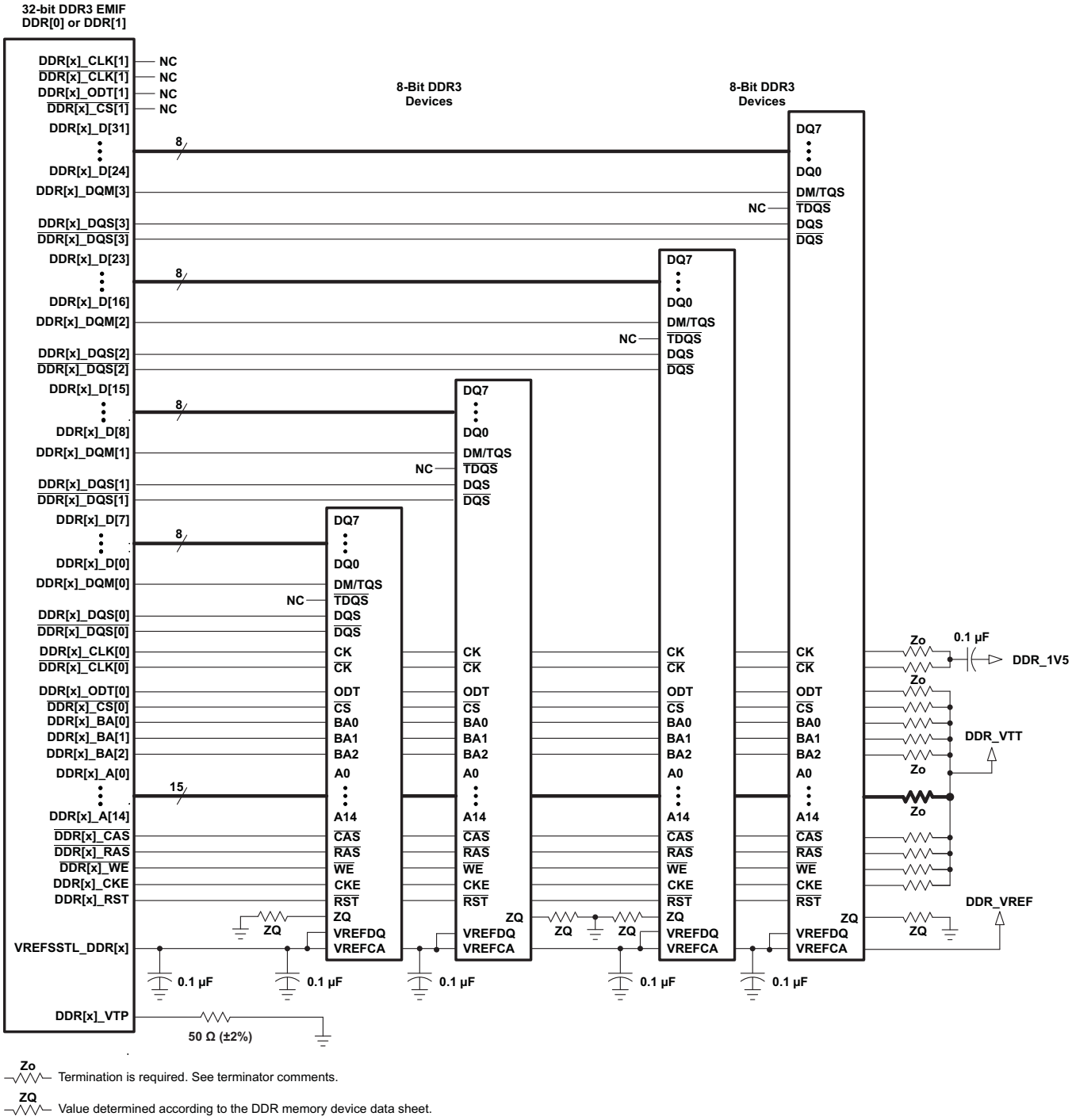

Figure 9-14. 32-Bit, One-Bank DDR3 Interface Schematic Using Four 8-Bit DDR3 Devices

9.3.2.4 Compatible JEDEC DDR3 Devices

Table 9-15 shows the parameters of the JEDEC DDR3 devices that are compatible with this interface. Generally, the DDR3 interface is compatible with DDR3-1600 devices in the x8 or x16 widths.

Table 9-15. Compatible JEDEC DDR3 Devices

NO.	PARAMETER	MIN	MAX	UNIT
1	JEDEC DDR3 device speed grade(1)	DDR3-800	DDR3-1600	
2	JEDEC DDR3 device bit width	x8	x16	Bits
3	JEDEC DDR3 device count(2)	2	8	Devices

(1) DDR3 speed grade depends on desired clock rate. Data rate is 2x the clock rate. For DDR3-1600, the clock rate is 800 MHz.
(2) For valid DDR3 device configurations and device counts, see Section 9.3.2.3, Figure 9-13, and Figure 9-14.

9.3.2.5 PCB Stackup

The minimum stackup for routing the DDR3 interface is a four-layer stack up as shown in Table 9-16. Additional layers may be added to the PCB stackup to accommodate other circuitry, enhance SI and EMI performance, or to reduce the size of the PCB footprint. A six-layer stackup is shown in Table 9-17. Complete stackup specifications are provided in Table 9-18.

Table 9-16. Minimum PCB Stackup

LAYER	TYPE	DESCRIPTION
1	Signal	Top routing mostly vertical
2	Plane	Split power plane
3	Plane	Full ground plane
4	Signal	Bottom routing mostly horizontal

Table 9-17. Six-Layer PCB Stackup Suggestion

LAYER	TYPE	DESCRIPTION
1	Signal	Top routing mostly vertical
2	Plane	Ground
3	Plane	Split power plane
4	Plane	Split power plane or Internal routing
5	Plane	Ground
6	Signal	Bottom routing mostly horizontal

Copyright © 2010–2015, Texas Instruments Incorporated

Table 9-18. PCB Stackup Specifications

NO.	PARAMETER	MIN	TYP	MAX	UNIT
1	PCB routing and plane layers	4	6		
2	Signal routing layers	2			
3	Full ground reference layers under DDR3 routing region (1)	1			
4	Full 1.5-V power reference layers under the DDR3 routing region (1)	1			
5	Number of reference plane cuts allowed within DDR routing region (2)			0	
6	Number of layers between DDR3 routing layer and reference plane (3)			0	
7	PCB routing feature size		4		Mils
8	PCB trace width, w		4		Mils
9	PCB BGA escape via pad size (4)		18	20	Mils
10	PCB BGA escape via hole size		10		Mils
11	Processor BGA pad size		0.3		mm
12	DDR3 device BGA pad size (5)				
13	Single-ended impedance, Zo	50		75	Ω
14	Impedance control (6)	Z-5	Z	Z+5	Ω

(1) Ground reference layers are preferred over power reference layers. Be sure to include bypass caps to accommodate reference layer return current as the trace routes switch routing layers.
(2) No traces should cross reference plane cuts within the DDR routing region. High-speed signal traces crossing reference plane cuts create large return current paths which can lead to excessive crosstalk and EMI radiation.
(3) Reference planes are to be directly adjacent to the signal plane to minimize the size of the return current loop.
(4) An 18-mil pad assumes Via Channel is the most economical BGA escape. A 20-mil pad may be used if additional layers are available for power routing. An 18-mil pad is required for minimum layer count escape.
(5) For the DDR3 device BGA pad size, see the DDR3 device manufacturer documentation.
(6) Z is the nominal singled-ended impedance selected for the PCB specified by item 13.

9.3.2.6 Placement

Figure 9-15 shows the required placement for the processor as well as the DDR3 devices. The dimensions for this figure are defined in Table 9-19. The placement does not restrict the side of the PCB on which the devices are mounted. The ultimate purpose of the placement is to limit the maximum trace lengths and allow for proper routing space. For a 16-bit DDR memory system, the high-word DDR3 devices are omitted from the placement.

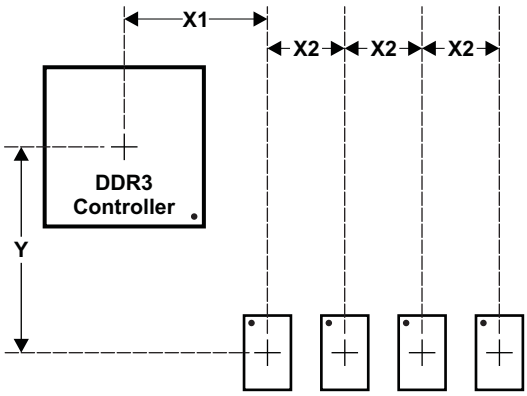

Figure 9-15. Placement Specifications

Table 9-19. Placement Specifications

NO.	PARAMETER	MIN	MAX	UNIT
1	X1 (1)(2)(3)		1000	Mils
2	X2 (1)(2)		600	Mils
3	Y Offset (1)(2)(3)		1500	Mils
4	DDR3 keepout region			
5	Clearance from non-DDR3 signal to DDR3 keepout region (4)(5)(6)	4		w

(1) For dimension definitions, see Figure 9-15.
(2) Measurements from center of processor to center of DDR3 device.
(3) Minimizing X1 and Y improves timing margins.
(4) w is defined as the signal trace width.
(5) Non-DDR3 signals allowed within DDR3 keepout region provided they are separated from DDR3 routing layers by a ground plane.
(6) Note that DDR3 signals from one DDR3 controller are considered *non-DDR3* to the other controller. In other words, keep the two DDR3 interfaces separated by this specification.

9.3.2.7 DDR3 Keepout Region

The region of the PCB used for DDR3 circuitry must be isolated from other signals. The DDR3 keepout region is defined for this purpose and is shown in Figure 9-16. The size of this region varies with the placement and DDR routing. Additional clearances required for the keepout region are shown in Table 9-19. Non-DDR3 signals should not be routed on the DDR signal layers within the DDR3 keepout region. Non-DDR3 signals may be routed in the region, provided they are routed on layers separated from the DDR signal layers by a ground layer. No breaks should be allowed in the reference ground layers in this region. In addition, the 1.5-V DDR3 power plane should cover the entire keepout region. Also note that the two DDR3 controller's signals should be separated from each other by the specification in Table 9-19, item 5.

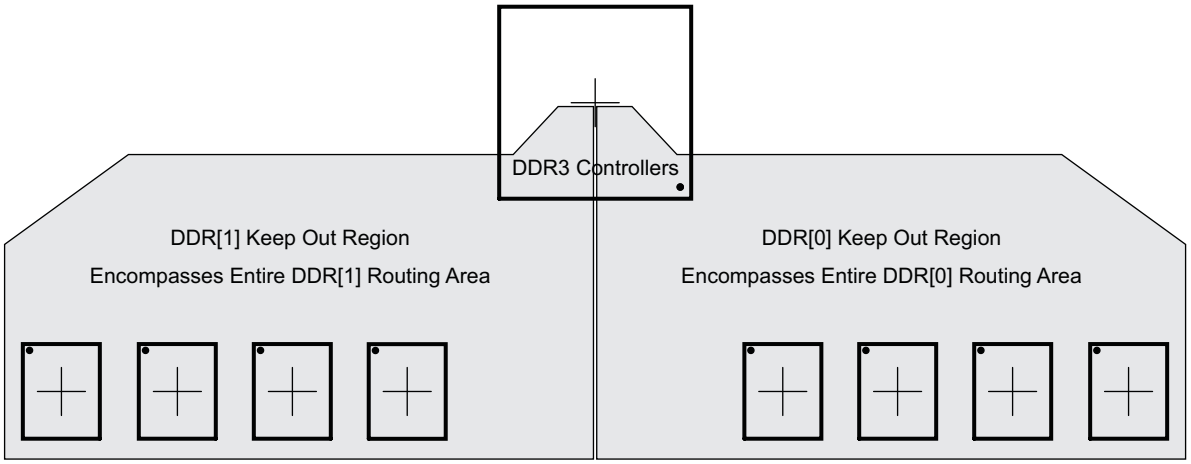

Figure 9-16. DDR3 Keepout Region

9.3.2.8 Bulk Bypass Capacitors

Bulk bypass capacitors are required for moderate speed bypassing of the DDR3 and other circuitry. Table 9-20 contains the minimum numbers and capacitance required for the bulk bypass capacitors. Note that this table only covers the bypass needs of the DDR3 controllers and DDR3 devices. Additional bulk bypass capacitance may be needed for other circuitry. Also note that Table 9-20 is *per DDR3 controller*; thus, systems using both controllers have to meet the needs of Table 9-20 twice, once for each controller.

Copyright © 2010–2015, Texas Instruments Incorporated

Table 9-20. Bulk Bypass Capacitors

NO.	PARAMETER	MIN	MAX	UNIT
1	DDR_1V5 bulk bypass capacitor count(1)	6		Devices
2	DDR_1V5 bulk bypass total capacitance	140		µF

(1) These devices should be placed near the devices they are bypassing, but preference should be given to the placement of the high-speed (HS) bypass capacitors and DDR3 signal routing.

9.3.2.9 High-Speed Bypass Capacitors

High-speed (HS) bypass capacitors are critical for proper DDR3 interface operation. It is particularly important to minimize the parasitic series inductance of the HS bypass capacitors, processor DDR power, and processor DDR ground connections. Table 9-21 contains the specification for the HS bypass capacitors as well as for the power connections on the PCB. Generally speaking, it is good to:

1. Fit as many HS bypass capacitors as possible.
2. Minimize the distance from the bypass cap to the pins (balls) being bypassed.
3. Use the smallest physical sized capacitors possible with the highest capacitance readily available.
4. Connect the bypass capacitor pads to their vias using the widest traces possible and using the largest hole size via possible.
5. Minimize via sharing. Note the limits on via sharing shown in Table 9-21.

Table 9-21. High-Speed Bypass Capacitors

NO.	PARAMETER	MIN	TYP	MAX	UNIT
1	HS bypass capacitor package size(1)		201	402	10 Mils
2	Distance, HS bypass capacitor to processor being bypassed(2)(3)(4)			400	Mils
3	Processor DDR_1V5 HS bypass capacitor count	70			Devices
4	Processor DDR_1V5 HS bypass capacitor total capacitance	5			µF
5	Number of connection vias for each device power and ground ball(5)				Vias
6	Trace length from device power and ground ball to connection via(2)		35	70	Mils
7	Distance, HS bypass capacitor to DDR device being bypassed(6)			150	Mils
8	DDR3 device HS bypass capacitor count(7)	12			Devices
9	DDR3 device HS bypass capacitor total capacitance(7)	0.85			µF
10	Number of connection vias for each HS capacitor(8)(9)	2			Vias
11	Trace length from bypass capacitor connect to connection via(2)(9)		35	100	Mils
12	Number of connection vias for each DDR3 device power and ground ball(10)	1			Vias
13	Trace length from DDR3 device power and ground ball to connection via(2)(8)		35	60	Mils

(1) LxW, 10-mil units, for example, a 0402 is a 40x20-mil surface-mount capacitor.
(2) Closer and shorter is better.
(3) Measured from the nearest processor power and ground ball to the center of the capacitor package.
(4) Three of these capacitors should be located underneath the processor, between the cluster of DDR_1V5 balls and ground balls, between the DDR interfaces on the package.
(5) See the Via Channel™ escape for the processor package.
(6) Measured from the DDR3 device power and ground ball to the center of the capacitor package.
(7) Per DDR3 device.
(8) An additional HS bypass capacitor can share the connection vias only if it is mounted on the opposite side of the board. No sharing of vias is permitted on the same side of the board.
(9) An HS bypass capacitor may share a via with a DDR device mounted on the same side of the PCB. A wide trace should be used for the connection and the length from the capacitor pad to the DDR device pad should be less than 150 mils.
(10) Up to a total of two pairs of DDR power and ground balls may share a via.

Copyright © 2010–2015, Texas Instruments Incorporated

9.3.2.9.1 Return Current Bypass Capacitors

Use additional bypass capacitors if the return current reference plane changes due to DDR3 signals hopping from one signal layer to another. The bypass capacitor here provides a path for the return current to hop planes along with the signal. As many of these return current bypass capacitors should be used as possible. Since these are returns for signal current, the signal via size may be used for these capacitors.

9.3.2.10 Net Classes

Table 9-22 lists the clock net classes for the DDR3 interface. Table 9-23 lists the signal net classes, and associated clock net classes, for signals in the DDR3 interface. These net classes are used for the termination and routing rules that follow.

Table 9-22. Clock Net Class Definitions

CLOCK NET CLASS	PROCESSOR PIN NAMES
CK	DDR[x]_CLK[x] and $\overline{\text{DDR[x]_CLK[x]}}$
DQS0	DDR[x]_DQS[0] and $\overline{\text{DDR[x]_DQS[0]}}$
DQS1	DDR[x]_DQS[1] and $\overline{\text{DDR[x]_DQS[1]}}$
DQS2 (1)	DDR[x]_DQS[2] and $\overline{\text{DDR[x]_DQS[2]}}$
DQS3 (1)	DDR[x]_DQS[3] and $\overline{\text{DDR[x]_DQS[3]}}$

(1) Only used on 32-bit wide DDR3 memory systems.

Table 9-23. Signal Net Class Definitions

SIGNAL NET CLASS	ASSOCIATED CLOCK NET CLASS	PROCESSOR PIN NAMES
ADDR_CTRL	CK	DDR[x]_BA[2:0], DDR[x]_A[14:0], $\overline{\text{DDR[x]_CS[x]}}$, $\overline{\text{DDR[x]_CAS}}$, $\overline{\text{DDR[x]_RAS}}$, $\overline{\text{DDR[x]_WE}}$, DDR[x]_CKE, DDR[x]_ODT[x]
DQ0	DQS0	DDR[x]_D[7:0], DDR[x]_DQM[0]
DQ1	DQS1	DDR[x]_D[15:8], DDR[x]_DQM[1]
DQ2 (1)	DQS2	DDR[x]_D[23:16], DDR[x]_DQM[2]
DQ3 (1)	DQS3	DDR[x]_D[31:24], DDR[x]_DQM[3]

(1) Only used on 32-bit wide DDR3 memory systems.

9.3.2.11 DDR3 Signal Termination

Signal terminators are required for the CK and ADDR_CTRL net classes. The data lines are terminated by ODT and, thus, the PCB traces should be unterminated. Detailed termination specifications are covered in the routing rules in the following sections.

9.3.2.12 VREFSSTL_DDR Routing

VREFSSTL_DDR (VREF) is used as a reference by the input buffers of the DDR3 memories as well as the processor. VREF is intended to be half the DDR3 power supply voltage and is typically generated with the DDR3 1.5-V and VTT power supply. It should be routed as a nominal 20-mil wide trace with 0.1 µF bypass capacitors near each device connection. Narrowing of VREF is allowed to accommodate routing congestion.

9.3.2.13 VTT

Like VREF, the nominal value of the VTT supply is half the DDR3 supply voltage. Unlike VREF, VTT is expected to source and sink current, specifically the termination current for the ADDR_CTRL net class Thevinen terminators. VTT is needed at the end of the address bus and it should be routed as a power sub-plane. VTT should be bypassed near the terminator resistors.

Copyright © 2010–2015, Texas Instruments Incorporated

9.3.2.14 CK and ADDR_CTRL Topologies and Routing Definition

The CK and ADDR_CTRL net classes are routed similarly and are length matched to minimize skew between them. CK is a bit more complicated because it runs at a higher transition rate and is differential. The following subsections show the topology and routing for various DDR3 configurations for CK and ADDR_CTRL. The figures in the following subsections define the terms for the routing specification detailed in Table 9-24.

9.3.2.14.1 Four DDR3 Devices

Four DDR3 devices are supported on the DDR EMIF consisting of four x8 DDR3 devices arranged as one bank (CS). These four devices may be mounted on a single side of the PCB, or may be mirrored in two pairs to save board space at a cost of increased routing complexity and parts on the backside of the PCB.

9.3.2.14.1.1 CK and ADDR_CTRL Topologies, Four DDR3 Devices

Figure 9-17 shows the topology of the CK net classes and Figure 9-18 shows the topology for the corresponding ADDR_CTRL net classes.

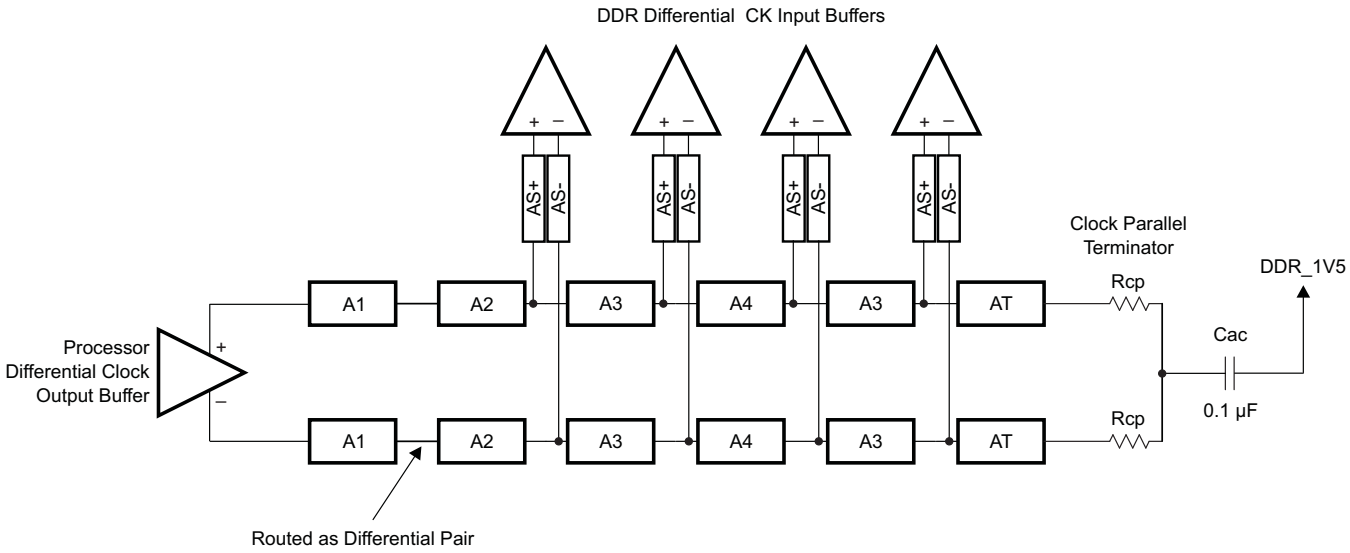

Figure 9-17. CK Topology for Four x8 DDR3 Devices

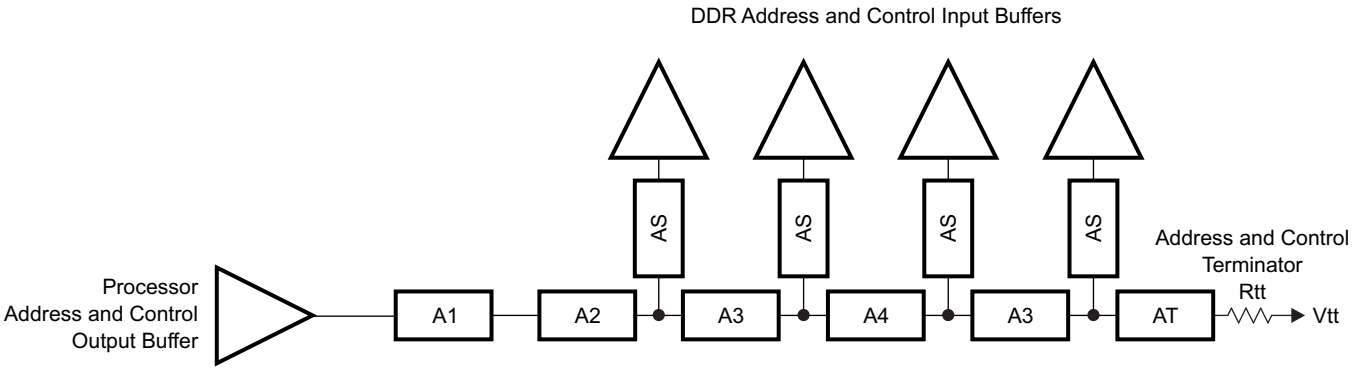

Figure 9-18. ADDR_CTRL Topology for Four x8 DDR3 Devices

9.3.2.14.1.2 CK and ADDR_CTRL Routing, Four DDR3 Devices

Figure 9-19 shows the CK routing for four DDR3 devices placed on the same side of the PCB. Figure 9-20 shows the corresponding ADDR_CTRL routing.

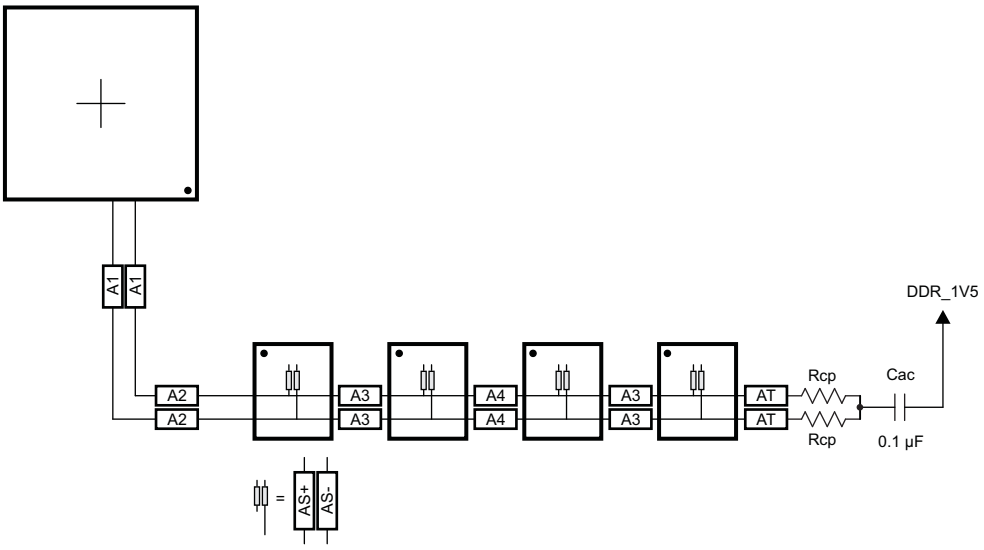

Figure 9-19. CK Routing for Four Single-Side DDR3 Devices

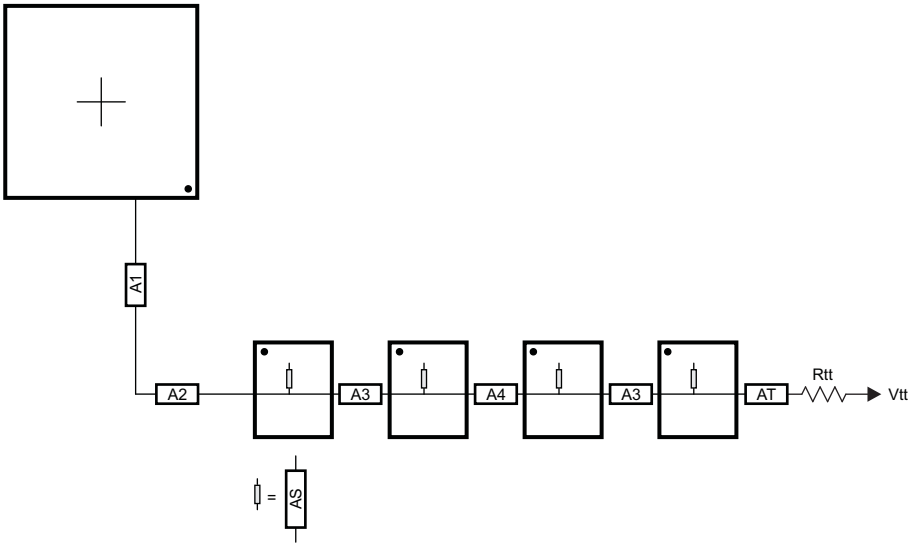

Figure 9-20. ADDR_CTRL Routing for Four Single-Side DDR3 Devices

To save PCB space, the four DDR3 memories may be mounted as two mirrored pairs at a cost of increased routing and assembly complexity. Figure 9-21 and Figure 9-22 show the routing for CK and ADDR_CTRL, respectively, for four DDR3 devices mirrored in a two-pair configuration.

Copyright © 2010–2015, Texas Instruments Incorporated

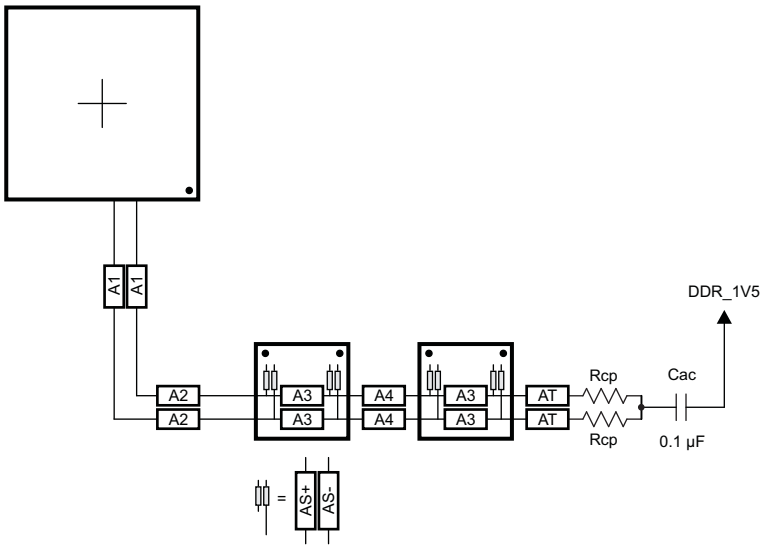

Figure 9-21. CK Routing for Four Mirrored DDR3 Devices

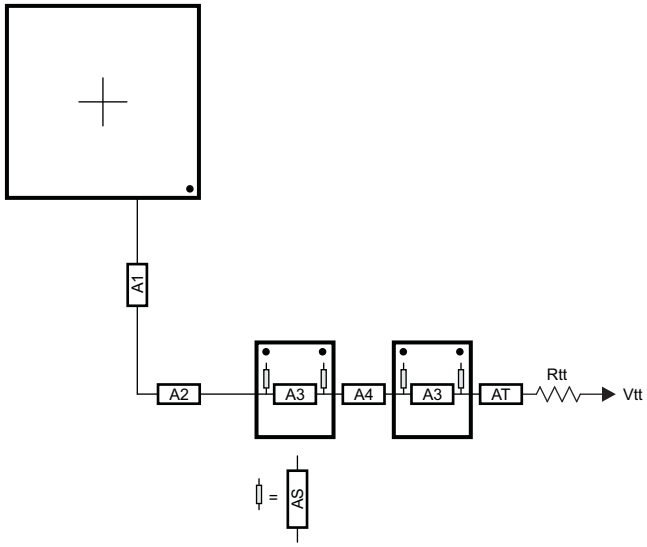

Figure 9-22. ADDR_CTRL Routing for Four Mirrored DDR3 Devices

9.3.2.14.2 Two DDR3 Devices

Two DDR3 devices are supported on the DDR EMIF consisting of two x8 DDR3 devices arranged as one bank (CS), 16 bits wide, or two x16 DDR3 devices arranged as one bank (CS), 32 bits wide. These two devices may be mounted on a single side of the PCB, or may be mirrored in a pair to save board space at a cost of increased routing complexity and parts on the backside of the PCB.

9.3.2.14.2.1 CK and ADDR_CTRL Topologies, Two DDR3 Devices

Figure 9-23 shows the topology of the CK net classes and Figure 9-24 shows the topology for the corresponding ADDR_CTRL net classes.

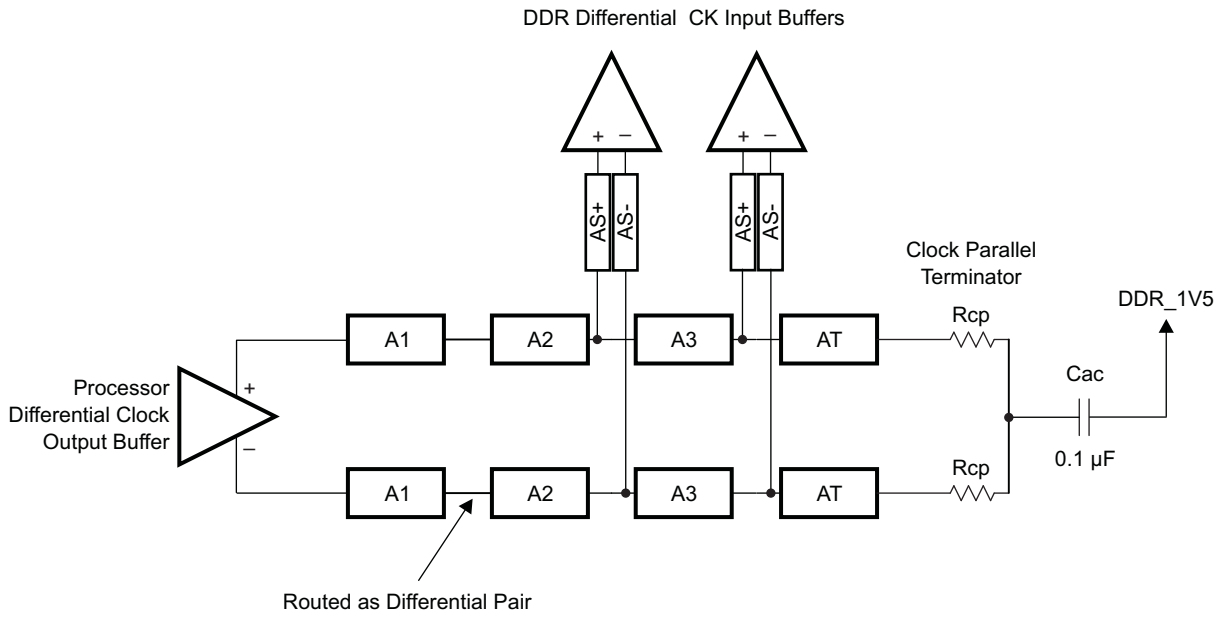

Figure 9-23. CK Topology for Two DDR3 Devices

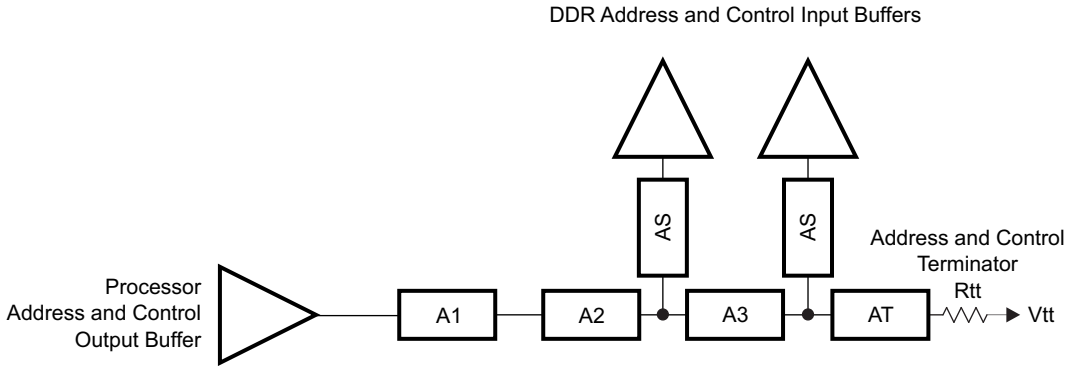

Figure 9-24. ADDR_CTRL Topology for Two DDR3 Devices

9.3.2.14.2.2 CK and ADDR_CTRL Routing, Two DDR3 Devices

Figure 9-25 shows the CK routing for two DDR3 devices placed on the same side of the PCB. Figure 9-26 shows the corresponding ADDR_CTRL routing.

Copyright © 2010–2015, Texas Instruments Incorporated

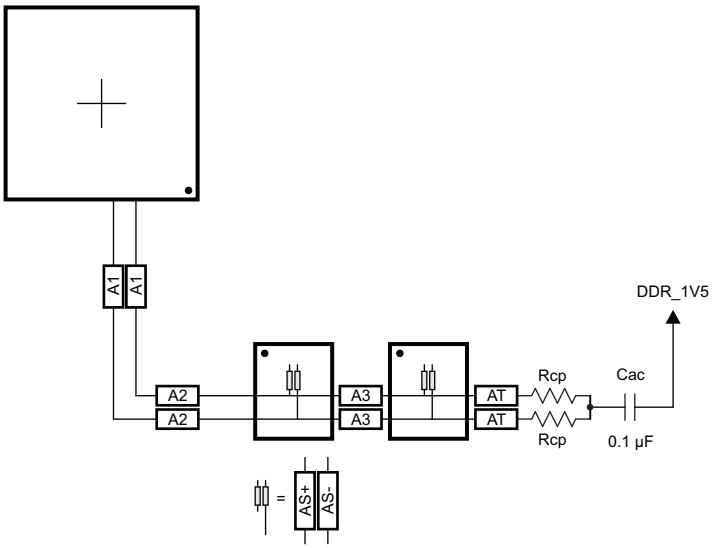

Figure 9-25. CK Routing for Two Single-Side DDR3 Devices

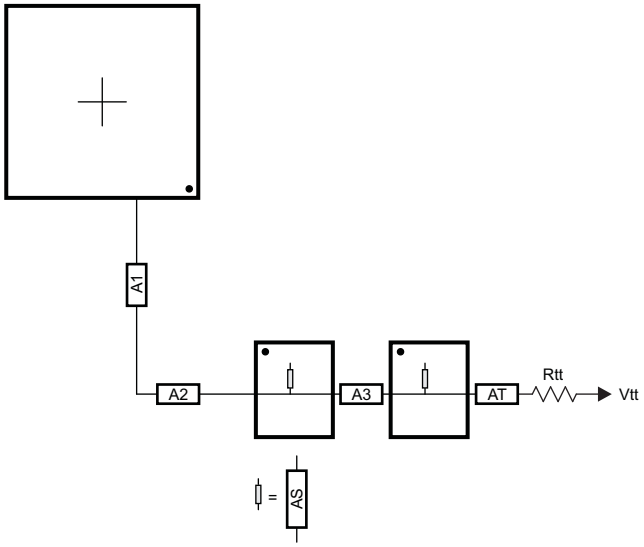

Figure 9-26. ADDR_CTRL Routing for Two Single-Side DDR3 Devices

To save PCB space, the two DDR3 memories may be mounted as a mirrored pair at a cost of increased routing and assembly complexity. Figure 9-27 and Figure 9-28 show the routing for CK and ADDR_CTRL, respectively, for two DDR3 devices mirrored in a single-pair configuration.

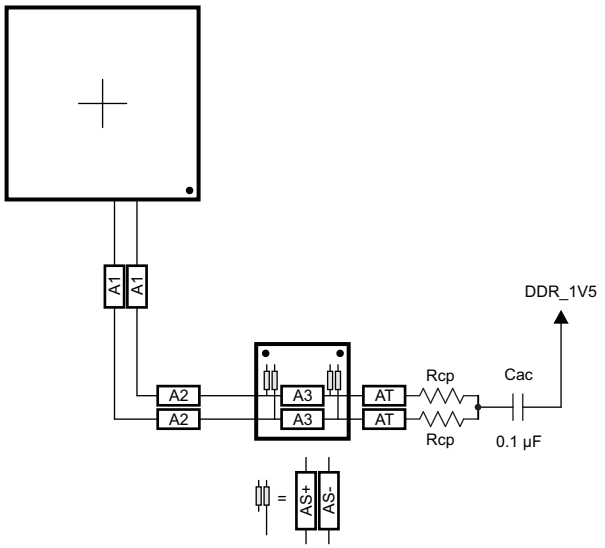

Figure 9-27. CK Routing for Two Mirrored DDR3 Devices

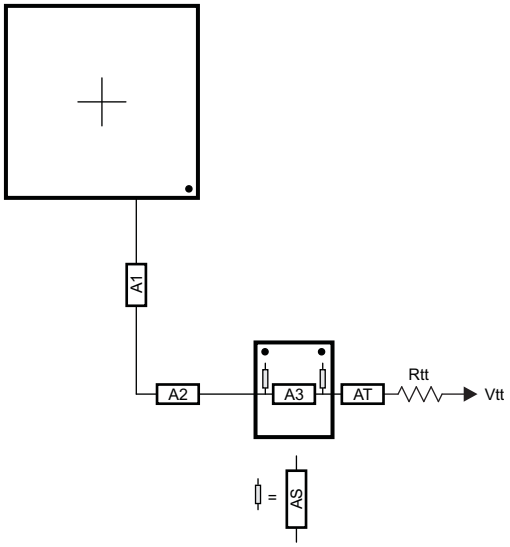

Figure 9-28. ADDR_CTRL Routing for Two Mirrored DDR3 Devices

9.3.2.14.3 One DDR3 Device

A single DDR3 device is supported on the DDR EMIF consisting of one x16 DDR3 device arranged as one bank (CS), 16 bits wide.

9.3.2.14.3.1 CK and ADDR_CTRL Topologies, One DDR3 Device

Figure 9-29 shows the topology of the CK net classes and Figure 9-30 shows the topology for the corresponding ADDR_CTRL net classes.

Copyright © 2010–2015, Texas Instruments Incorporated

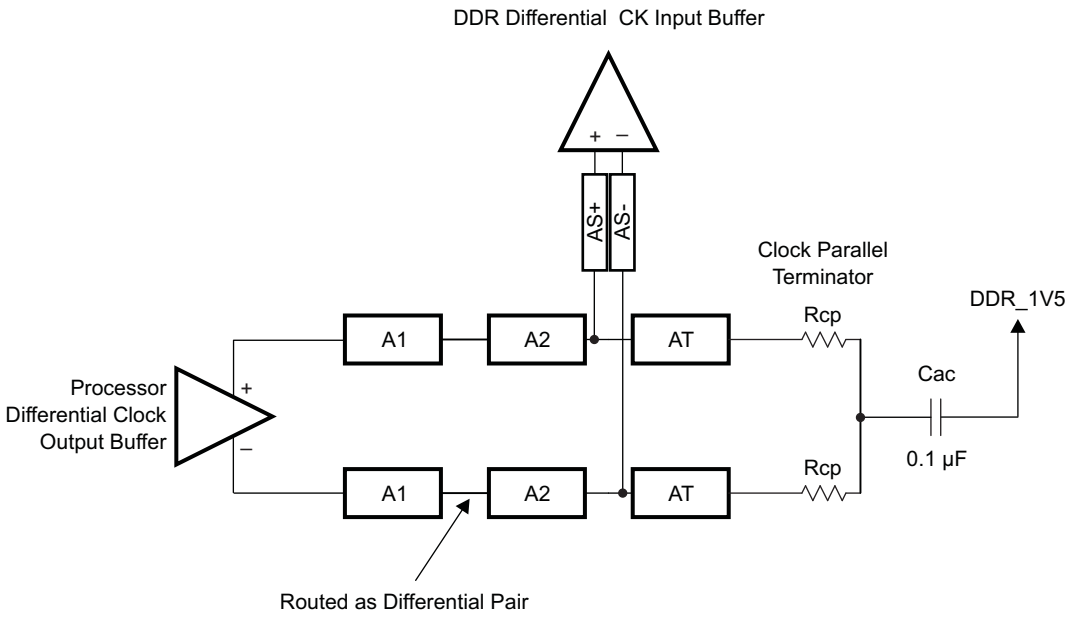

Figure 9-29. CK Topology for One DDR3 Device

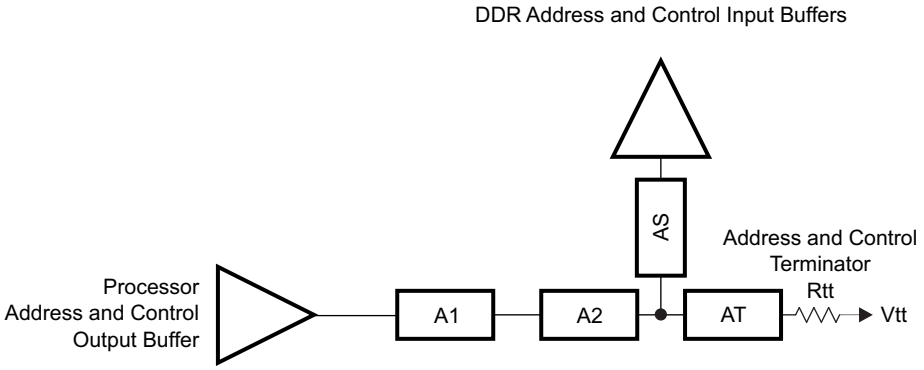

Figure 9-30. ADDR_CTRL Topology for One DDR3 Device

9.3.2.14.3.2 CK and ADDR_CTRL Routing, One DDR3 Device

Figure 9-31 shows the CK routing for one DDR3 device placed on the same side of the PCB. Figure 9-32 shows the corresponding ADDR_CTRL routing.

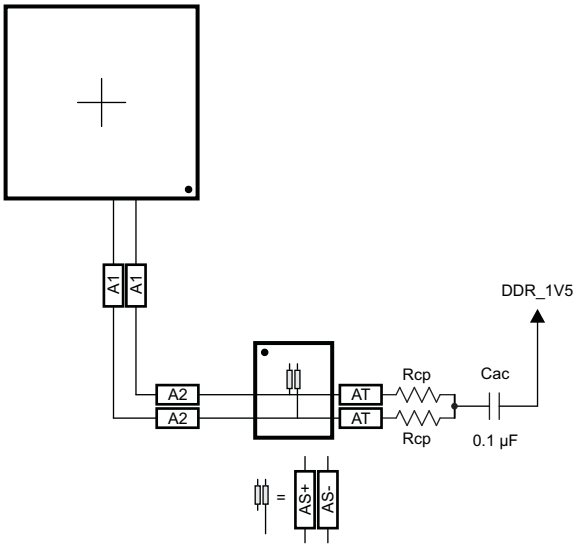

Figure 9-31. CK Routing for One DDR3 Device

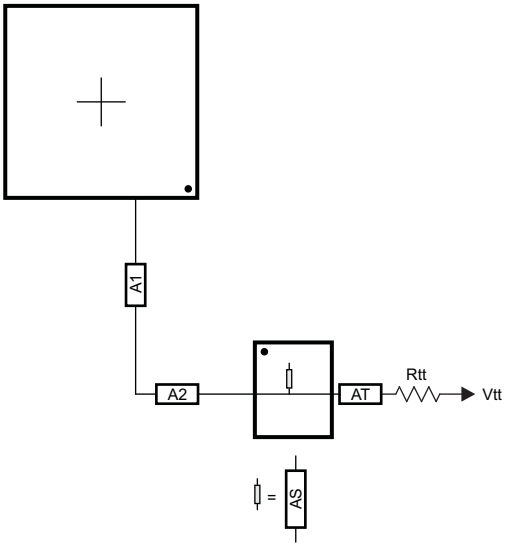

Figure 9-32. ADDR_CTRL Routing for One DDR3 Device

9.3.2.15 Data Topologies and Routing Definition

No matter the number of DDR3 devices used, the data line topology is always point to point, so its definition is simple.

9.3.2.15.1 DQS, DQ and DM Topologies, Any Number of Allowed DDR3 Devices

DQS lines are point-to-point differential, and DQ and DM lines are point-to-point singled ended. Figure 9-33 and Figure 9-34 show these topologies.

Copyright © 2010–2015, Texas Instruments Incorporated

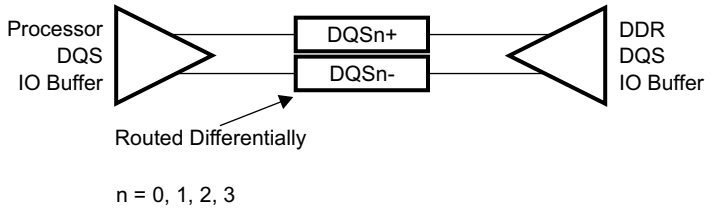

Figure 9-33. DQS Topology

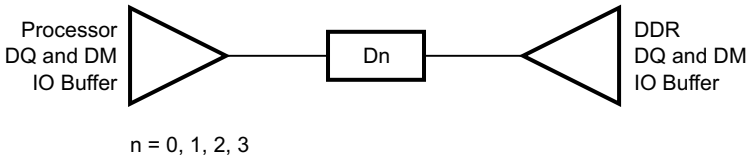

Figure 9-34. DQ/DM Topology

9.3.2.15.2 DQS, DQ and DM Routing, Any Number of Allowed DDR3 Devices

Figure 9-35 and Figure 9-36 show the DQS, DQ and DM routing.

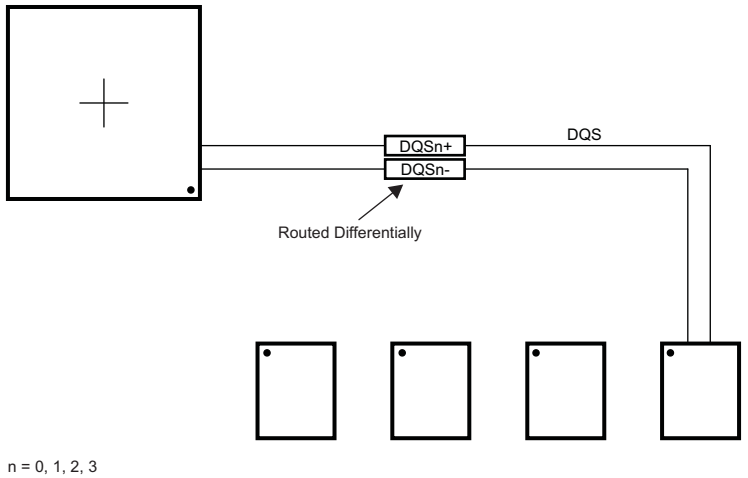

Figure 9-35. DQS Routing With Any Number of Allowed DDR3 Devices

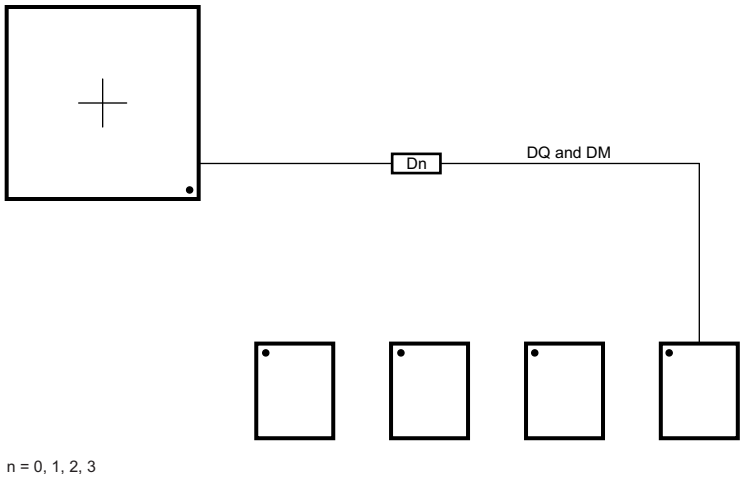

Figure 9-36. DQ and DM Routing With Any Number of Allowed DDR3 Devices

9.3.2.16 Routing Specification

9.3.2.16.1 CK and ADDR_CTRL Routing Specification

Skew within the CK and ADDR_CTRL net classes directly reduces setup and hold margin and, thus, this skew must be controlled. The only way to practically match lengths on a PCB is to lengthen the shorter traces up to the length of the longest net in the net class and its associated clock. A metric to establish this maximum length is Manhattan distance. The Manhattan distance between two points on a PCB is the length between the points when connecting them only with horizontal or vertical segments. A reasonable trace route length is to within a percentage of its Manhattan distance. CACLM is defined as Clock Address Control Longest Manhattan distance.

Given the clock and address pin locations on the processor and the DDR3 memories, the maximum possible Manhattan distance can be determined given the placement. Figure 9-37 and Figure 9-38 show this distance for four loads and two loads, respectively. It is from this distance that the specifications on the lengths of the transmission lines for the address bus are determined. CACLM is determined similarly for other address bus configurations; that is, it is based on the longest net of the CK and ADDR_CTRL net class. For CK and ADDR_CTRL routing, these specifications are contained in Table 9-24.

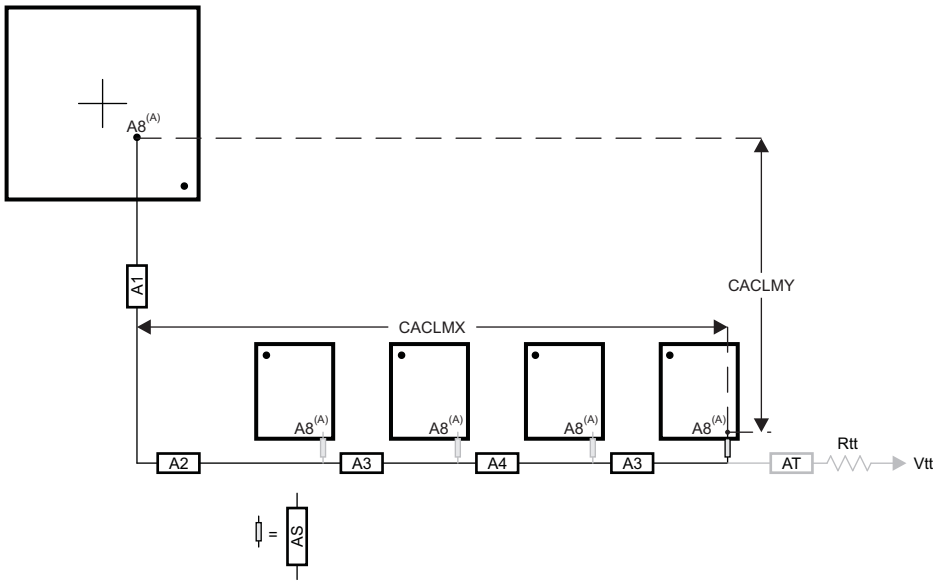

A. It is very likely that the longest CK and ADDR_CTRL Manhattan distance will be for Address Input 8 (A8) on the DDR3 memories. CACLM is based on the longest Manhattan distance due to the device placement. Verify the net class that satisfies this criteria and use as the baseline for CK and ADDR_CTRL skew matching and length control.

The length of shorter CK and ADDR_CTRL stubs as well as the length of the terminator stub are not included in this length caculation. Non-included lengths are grayed out in the figure.

Assuming A8 is the longest, CALM = CACLMY + CACLMX + 300 mils.
The extra 300 mils allows for routing down lower than the DDR3 memories and returning up to reach A8.

Figure 9-37. CACLM for Four Address Loads on One Side of PCB

Copyright © 2010–2015, Texas Instruments Incorporated

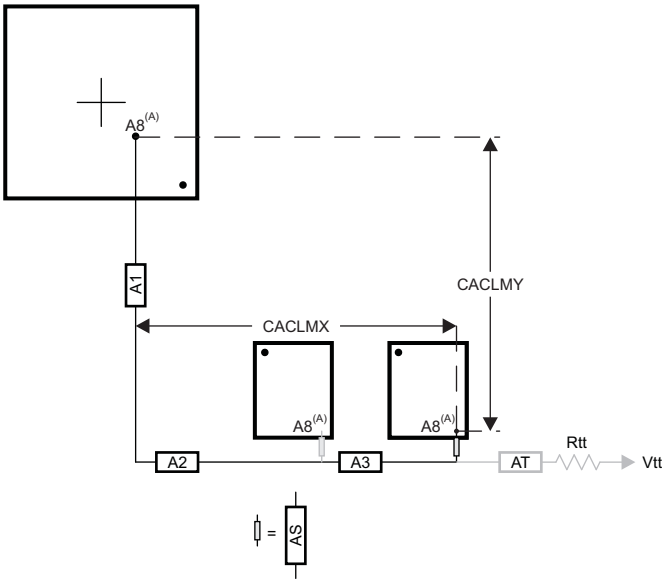

A. It is very likely that the longest CK and ADDR_CTRL Manhattan distance will be for Address Input 8 (A8) on the DDR3 memories. CACLM is based on the longest Manhattan distance due to the device placement. Verify the net class that satisfies this criteria and use as the baseline for CK and ADDR_CTRL skew matching and length control.

The length of shorter CK and ADDR_CTRL stubs as well as the length of the terminator stub are not included in this length caculation. Non-included lengths are grayed out in the figure.

Assuming A8 is the longest, CALM = CACLMY + CACLMX + 300 mils.
The extra 300 mils allows for routing down lower than the DDR3 memories and returning up to reach A8.

Figure 9-38. CACLM for Two Address Loads on One Side of PCB

Table 9-24. CK and ADDR_CTRL Routing Specification(1)(2)

NO.	PARAMETER	MIN	TYP	MAX	UNIT
1	A1+A2 length			2500	mils
2	A1+A2 skew			25	mils
3	A3 length			660	mils
4	A3 skew(3)			25	mils
5	A3 skew(4)			125	mils
6	A4 length			660	mils
7	A4 skew			25	mils
8	AS length			100	mils
9	AS skew			100	mils
10	AS+ and AS- length			70	mils
11	AS+ and AS- skew			5	mils
12	AT length(5)		500		mils
13	AT skew(6)		100		mils
14	AT skew(7)			5	mils
15	CK and ADDR_CTRL nominal trace length(8)	CACLM-50	CACLM	CACLM+50	mils

(1) The use of vias should be minimized.
(2) Additional bypass capacitors are required when using the DDR_1V5 plane as the reference plane to allow the return current to jump between the DDR_1V5 plane and the ground plane when the net class swtiches layers at a via.
(3) Non-mirrored configuration (all DDR3 memories on same side of PCB).
(4) Mirrored configuration (one DDR3 device on top of the board and one DDR3 device on the bottom).
(5) While this length can be increased for convienience, its length should be minimized.
(6) ADDR_CTRL net class only (not CK net class). Minimizing this skew is recommended, but not required.
(7) CK net class only.
(8) CACLM is the longest Manhattan distance of the CK and ADDR_CTRL net classes + 300 mils. For definition, see Section 9.3.2.16.1, Figure 9-37, and Figure 9-38.

Copyright © 2010–2015, Texas Instruments Incorporated

Table 9-24. CK and ADDR_CTRL Routing Specification(1)(2) (continued)

NO.	PARAMETER	MIN	TYP	MAX	UNIT
16	Center-to-center CK to other DDR3 trace spacing(9)	4w			
17	Center-to-center ADDR_CTRL to other DDR3 trace spacing(9)(10)	4w			
18	Center-to-center ADDR_CTRL to other ADDR_CTRL trace spacing(9)	3w			
19	CK center-to-center spacing(11)				
20	CK spacing to other net(9)	4w			
21	Rcp(12)	Zo-1	Zo	Zo+	Ω
22	Rtt(12)(13)	Zo-5	Zo	Zo+5	Ω

(9) Center-to-center spacing is allowed to fall to minimum (w) for up to 1250 mils of routed length.
(10) The ADDR_CTRL net class of the other DDR EMIF is considered *other DDR3 trace spacing*.
(11) CK spacing set to ensure proper differential impedance.
(12) Source termination (series resistor at driver) is specifically not allowed.
(13) Termination values should be uniform across the net class.

9.3.2.16.2 DQS and DQ Routing Specification

Skew within the DQS, DQ and DM net classes directly reduces setup and hold margin and thus this skew must be controlled. The only way to practically match lengths on a PCB is to lengthen the shorter traces up to the length of the longest net in the net class and its associated clock. As with CK and ADDR_CTRL, a reasonable trace route length is to within a percentage of its Manhattan distance. DQLMn is defined as DQ Longest Manhattan distance n, where n is the byte number. For a 32-bit interface, there are four DQLMs, DQLM0-DQLM3. Likewise, for a 16-bit interface, there are two DQLMs, DQLM0-DQLM1.

NOTE

It is not required, nor is it recommended, to match the lengths across all bytes. Length matching is only required within each byte.

Given the DQS, DQ and DM pin locations on the processor and the DDR3 memories, the maximum possible Manhattan distance can be determined given the placement. Figure 9-39 shows this distance for four loads. It is from this distance that the specifications on the lengths of the transmission lines for the data bus are determined. For DQS, DQ and DM routing, these specifications are contained in Table 9-25.

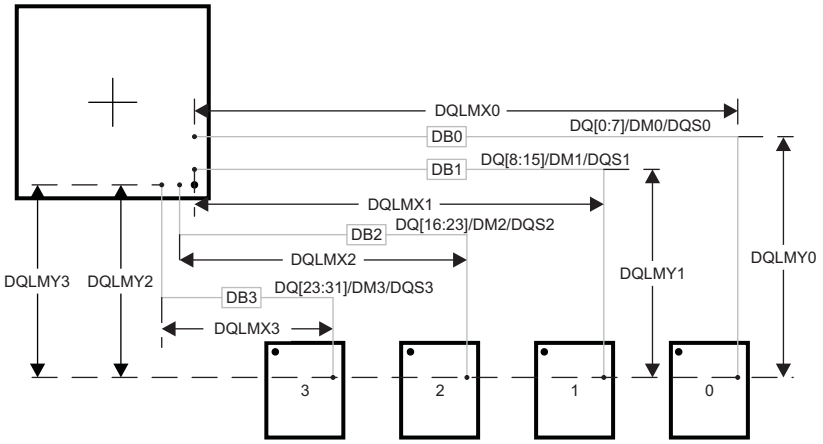

DB0 - DB3 represent data bytes 0 - 3.

There are four DQLMs, one for each byte (32-bit interface). Each DQLM is the longest Manhattan distance of the byte; therefore:
DQLM0 = DQLMX0 + DQLMY0
DQLM1 = DQLMX1 + DQLMY1
DQLM2 = DQLMX2 + DQLMY2
DQLM3 = DQLMX3 + DQLMY3

Figure 9-39. DQLM for Any Number of Allowed DDR3 Devices

Copyright © 2010–2015, Texas Instruments Incorporated

Table 9-25. Data Routing Specification(1)

NO.	PARAMETER	MIN	TYP	MAX	UNIT
1	DB0 nominal length(2)(3)			DQLM0	mils
2	DB1 nominal length(2)(4)			DQLM1	mils
3	DB2 nominal length(2)(5)			DQLM2	mils
4	DB3 nominal length(2)(6)			DQLM3	mils
5	DBn skew(7)			25	mils
6	DQSn+ to DQSn- skew			5	mils
7	DQSn to DBn skew(7)(8)			25	mils
8	Center-to-center DBn to other DDR3 trace spacing(9)(10)	4w			
9	Center-to-center DBn to other DBn trace spacing(9)(11)	3w			
10	DQSn center-to-center spacing(12)				
11	DQSn center-to-center spacing to other net(9)	4w			

(1) External termination disallowed. Data termination should use built-in ODT functionality.
(2) DQLMn is the longest Manhattan distance of a byte. For definition, see Section 9.3.2.16.2 and Figure 9-39.
(3) DQLM0 is the longest Manhattan length for the net classes of Byte 0.
(4) DQLM1 is the longest Manhattan length for the net classes of Byte 1.
(5) DQLM2 is the longest Manhattan length for the net classes of Byte 2.
(6) DQLM3 is the longest Manhattan length for the net slasses of Byte 3.
(7) Length matching is only done within a byte. Length matching across bytes is neither required nor recommended.
(8) Each DQS pair is length matched to its associated byte.
(9) Center-to-center spacing is allowed to fall to minimum (w) for up to 1250 mils of routed length.
(10) Other DDR3 trace spacing means other DDR3 net classes not within the byte.
(11) This applies to spacing within the net classes of a byte.
(12) DQS pair spacing is set to ensure proper differential impedance.

9.3.3 DDR2 and DDR3 Memory Controller Register Descriptions

Table 9-26. DDR2 and DDR3 Memory Controller Registers

DDR0 HEX ADDRESS	DDR1 HEX ADDRESS	ACRONYM	REGISTER NAME
0x4C00 0004	0x4D00 0004	SDRSTAT	SDRAM Status
0x4C00 0008	0x4D00 0008	SDRCR	SDRAM Config
0x4C00 000C	0x4D00 000C	SDRCR2	SDRAM Config 2
0x4C00 0010	0x4D00 0010	SDRRCR	SDRAM Refresh Control
0x4C00 0014	0x4D00 0014	SDRRCSR	SDRAM Refresh Control Shadow
0x4C00 0018	0x4D00 0018	SDRTIM1	SDRAM Timing 1
0x4C00 001C	0x4D00 001C	SDRTIM1SR	SDRAM Timing 1 Shadow
0x4C00 0020	0x4D00 0020	SDRTIM2	SDRAM Timing 2
0x4C00 0024	0x4D00 0024	SDRTIM2SR	SDRAM Timing 2 Shadow
0x4C00 0028	0x4D00 0028	SDRTIM3	SDRAM Timing 3
0x4C00 002C	0x4D00 002C	SDRTIM3SR	SDRAM Timing 3 Shadow
0x4C00 0038	0x4D00 0038	PMCR	Power Management Control
0x4C00 003C	0x4D00 003C	PMCSR	Power Management Control Shadow
0x4C00 0054	0x4D00 0054	PBBPR	Peripheral Bus Burst Priority
0x4C00 00A0	0x4D00 00A0	EOI	End of Interrupt
0x4C00 00A4	0x4D00 00A4	SOIRSR	System OCP Interrupt Raw Status
0x4C00 00AC	0x4D00 00AC	SOISR	System OCP Interrupt Status
0x4C00 00B4	0x4D00 00B4	SOIESR	System OCP Interrupt Enable Set
0x4C00 00BC	0x4D00 00BC	SOIECR	System OCP Interrupt Enable Clear
0x4C00 00C8	0x4D00 00C8	ZQCR	SDRAM output Impedance Calibration Config
0x4C00 00DC	0x4D00 00DC	RWLCR	Read-Write Leveling Control
0x4C00 00E4	0x4D00 00E4	DDRPHYCR	DDR PHY Control
0x4C00 00E8	0x4D00 00E8	DDRPHYCSR	DDR PHY Control Shadow

9.3.4 DDR2 and DDR3 PHY Register Descriptions

Table 9-27. DDR2 and DDR3 PHY Registers

DDR0 HEX ADDRESS	DDR1 HEX ADDRESS	ACRONYM	REGISTER NAME
0x4819 800C	0x4819 A00C	CMD0_IO_CONFIG_I_0	Command 0 Address and Command Pad Configuration
0x4819 8010	0x4819 A010	CMD0_IO_CONFIG_I_CLK_0	Command 0 Clock Pad Configuration
0x4819 8014	0x4819 A014	CMD0_IO_CONFIG_SR_0	Command 0 Address and Command Slew Rate Configuration
0x4819 8018	0x4819 A018	CMD0_IO_CONFIG_SR_CLK_0	Command 0 Clock Pad Slew Rate Configuration
0x4819 801C	0x4819 A01C	CMD0_REG_PHY_CTRL_SLAVE_RATIO_0	Command 0 Address and Command Slave Ratio
0x4819 802C	0x4819 A02C	CMD0_REG_PHY_INVERT_CLKOUT_0	Command 0 Invert Clockout Selection
0x4819 8040	0x4819 A040	CMD1_IO_CONFIG_I_0	Command 1 Address and Command Pad Configuration
0x4819 8044	0x4819 A044	CMD1_IO_CONFIG_I_CLK_0	Command 1 Clock Pad Configuration
0x4819 8048	0x4819 A048	CMD1_IO_CONFIG_SR_0	Command 1 Address and Command Slew Rate Configuration
0x4819 804C	0x4819 A04C	CMD1_IO_CONFIG_SR_CLK_0	Command 1 Clock Pad Slew Rate Configuration
0x4819 8050	0x4819 A050	CMD1_REG_PHY_CTRL_SLAVE_RATIO_0	Command 1 Address and Command Slave Ratio

Copyright © 2010–2015, Texas Instruments Incorporated

Table 9-27. DDR2 and DDR3 PHY Registers (continued)

DDR0 HEX ADDRESS	DDR1 HEX ADDRESS	ACRONYM	REGISTER NAME
0x4819 8060	0x4819 A060	CMD1_REG_PHY_INVERT_CLKOUT_0	Command 1 Invert Clockout Selection
0x4819 8074	0x4819 A074	CMD2_IO_CONFIG_I_0	Command 2 Address and Command Pad Configuration
0x4819 8078	0x4819 A078	CMD2_IO_CONFIG_I_CLK_0	Command 2 Clock Pad Configuration
0x4819 807C	0x4819 A07C	CMD2_IO_CONFIG_SR_0	Command 2 Address and Command Slew Rate Configuration
0x4819 8080	0x4819 A080	CMD2_IO_CONFIG_SR_CLK_0	Command 2 Clock Pad Slew Rate Configuration
0x4819 8084	0x4819 A084	CMD2_REG_PHY_CTRL_SLAVE_RATIO_0	Command 2 Address and Command Slave Ratio
0x4819 8094	0x4819 A094	CMD2_REG_PHY_INVERT_CLKOUT_0	Command 2 Invert Clockout Selection
0x4819 80A8	0x4819 A0A8	DATA0_IO_CONFIG_I_0	Data Macro 0 Data Pad Configuration
0x4819 80AC	0x4819 A0AC	DATA0_IO_CONFIG_I_CLK_0	Data Macro 0 Data Strobe Pad Configuration
0x4819 80B0	0x4819 A0B0	DATA0_IO_CONFIG_SR_0	Data Macro 0 Data Slew Rate Configuration
0x4819 80B4	0x4819 A0B4	DATA0_IO_CONFIG_SR_CLK_0	Data Macro 0 Data Strobe Slew Rate Configuration
0x4819 80C8	0x4819 A0C8	DATA0_REG_PHY_RD_DQS_SLAVE_RATIO_0	Data Macro 0 Read DQS Slave Ratio
0x4819 80DC	0x4819 A0DC	DATA0_REG_PHY_WR_DQS_SLAVE_RATIO_0	Data Macro 0 Write DQS Slave Ratio
0x4819 80F0	0x4819 A0F0	DATA0_REG_PHY_WRLVL_INIT_RATIO_0	Data Macro 0 Write Leveling Init Ratio
0x4819 80F8	0x4819 A0F8	DATA0_REG_PHY_WRLVL_INIT_MODE_0	Data Macro 0 Write Leveling Init Mode Ratio Selection
0x4819 80FC	0x4819 A0FC	DATA0_REG_PHY_GATELVL_INIT_RATIO_0	Data Macro 0 DQS Gate Training Init Ratio
0x4819 8104	0x4819 A104	DATA0_REG_PHY_GATELVL_INIT_MODE_0	Data Macro 0 DQS Gate Training Init Mode Ratio Selection
0x4819 8108	0x4819 A108	DATA0_REG_PHY_FIFO_WE_SLAVE_RATIO_0	Data Macro 0 DQS Gate Slave Ratio
0x4819 8120	0x4819 A120	DATA0_REG_PHY_WR_DATA_SLAVE_RATIO_0	Data Macro 0 Write Data Slave Ratio
0x4819 8134	0x4819 A134	DATA0_REG_PHY_USE_RANK0_DELAYS	Data Macro 0 Delay Selection
0x4819 814C	0x4819 A14C	DATA1_IO_CONFIG_I_0	Data Macro 1 Data Pad Configuration
0x4819 8150	0x4819 A150	DATA1_IO_CONFIG_I_CLK_0	Data Macro 1 Data Strobe Pad Configuration
0x4819 8154	0x4819 A154	DATA1_IO_CONFIG_SR_0	Data Macro 1 Data Slew Rate Configuration
0x4819 8158	0x4819 A158	DATA1_IO_CONFIG_SR_CLK_0	Data Macro 1 Data Strobe Slew Rate Configuration
0x4819 816C	0x4819 A16C	DATA1_REG_PHY_RD_DQS_SLAVE_RATIO_0	Data Macro 1 Read DQS Slave Ratio
0x4819 8180	0x4819 A180	DATA1_REG_PHY_WR_DQS_SLAVE_RATIO_0	Data Macro 1 Write DQS Slave Ratio
0x4819 8194	0x4819 A194	DATA1_REG_PHY_WRLVL_INIT_RATIO_0	Data Macro 1 Write Leveling Init Ratio
0x4819 819C	0x4819 A19C	DATA1_REG_PHY_WRLVL_INIT_MODE_0	Data Macro 1 Write Leveling Init Mode Ratio Selection
0x4819 81A0	0x4819 A1A0	DATA1_REG_PHY_GATELVL_INIT_RATIO_0	Data Macro 1 DQS Gate Training Init Ratio
0x4819 81A8	0x4819 A1A8	DATA1_REG_PHY_GATELVL_INIT_MODE_0	Data Macro 1 DQS Gate Training Init Mode Ratio Selection
0x4819 81AC	0x4819 A1AC	DATA1_REG_PHY_FIFO_WE_SLAVE_RATIO_0	Data Macro 1 DQS Gate Slave Ratio
0x4819 81C4	0x4819 A1C4	DATA1_REG_PHY_WR_DATA_SLAVE_RATIO_0	Data Macro 1 Write Data Slave Ratio
0x4819 81D8	0x4819 A1D8	DATA1_REG_PHY_USE_RANK0_DELAYS	Data Macro 1 Delay Selection
0x4819 81F0	0x4819 A1F0	DATA2_IO_CONFIG_I_0	Data Macro 2 Data Pad Configuration
0x4819 81F4	0x4819 A1F4	DATA2_IO_CONFIG_I_CLK_0	Data Macro 2 Data Strobe Pad Configuration
0x4819 81F8	0x4819 A1F8	DATA2_IO_CONFIG_SR_0	Data Macro 2 Data Slew Rate Configuration
0x4819 81FC	0x4819 A1FC	DATA2_IO_CONFIG_SR_CLK_0	Data Macro 2 Data Strobe Slew Rate Configuration
0x4819 8210	0x4819 A210	DATA2_REG_PHY_RD_DQS_SLAVE_RATIO_0	Data Macro 2 Read DQS Slave Ratio
0x4819 8224	0x4819 A224	DATA2_REG_PHY_WR_DQS_SLAVE_RATIO_0	Data Macro 2 Write DQS Slave Ratio

Copyright © 2010–2015, Texas Instruments Incorporated

Table 9-27. DDR2 and DDR3 PHY Registers (continued)

DDR0 HEX ADDRESS	DDR1 HEX ADDRESS	ACRONYM	REGISTER NAME
0x4819 8238	0x4819 A238	DATA2_REG_PHY_WRLVL_INIT_RATIO_0	Data Macro 2 Write Leveling Init Ratio
0x4819 8240	0x4819 A240	DATA2_REG_PHY_WRLVL_INIT_MODE_0	Data Macro 2 Write Leveling Init Mode Ratio Selection
0x4819 8244	0x4819 A244	DATA2_REG_PHY_GATELVL_INIT_RATIO_0	Data Macro 2 DQS Gate Training Init Ratio
0x4819 824C	0x4819 A24C	DATA2_REG_PHY_GATELVL_INIT_MODE_0	Data Macro 2 DQS Gate Training Init Mode Ratio Selection
0x4819 8250	0x4819 A250	DATA2_REG_PHY_FIFO_WE_SLAVE_RATIO_0	Data Macro 2 DQS Gate Slave Ratio
0x4819 8268	0x4819 A268	DATA2_REG_PHY_WR_DATA_SLAVE_RATIO_0	Data Macro 2 Write Data Slave Ratio
0x4819 827C	0x4819 A27C	DATA2_REG_PHY_USE_RANK0_DELAYS	Data Macro 2 Delay Selection
0x4819 8294	0x4819 A294	DATA3_IO_CONFIG_I_0	Data Macro 3 Data Pad Configuration
0x4819 8298	0x4819 A298	DATA3_IO_CONFIG_I_CLK_0	Data Macro 3 Data Strobe Pad Configuration
0x4819 829C	0x4819 A29C	DATA3_IO_CONFIG_SR_0	Data Macro 3 Data Slew Rate Configuration
0x4819 82A0	0x4819 A2A0	DATA3_IO_CONFIG_SR_CLK_0	Data Macro 3 Data Strobe Slew Rate Configuration
0x4819 82B4	0x4819 A2B4	DATA3_REG_PHY_RD_DQS_SLAVE_RATIO_0	Data Macro 3 Read DQS Slave Ratio
0x4819 82C8	0x4819 A2C8	DATA3_REG_PHY_WR_DQS_SLAVE_RATIO_0	Data Macro 3 Write DQS Slave Ratio
0x4819 82DC	0x4819 A2DC	DATA3_REG_PHY_WRLVL_INIT_RATIO_0	Data Macro 3 Write Leveling Init Ratio
0x4819 82E4	0x4819 A2E4	DATA3_REG_PHY_WRLVL_INIT_MODE_0	Data Macro 3 Write Leveling Init Mode Ratio Selection
0x4819 82E8	0x4819 A2E8	DATA3_REG_PHY_GATELVL_INIT_RATIO_0	Data Macro 3 DQS Gate Training Init Ratio
0x4819 82F0	0x4819 A2F0	DATA3_REG_PHY_GATELVL_INIT_MODE_0	Data Macro 3 DQS Gate Training Init Mode Ratio Selection
0x4819 82F4	0x4819 A2F4	DATA3_REG_PHY_FIFO_WE_SLAVE_RATIO_0	Data Macro 3 DQS Gate Slave Ratio
0x4819 830C	0x4819 A30C	DATA3_REG_PHY_WR_DATA_SLAVE_RATIO_0	Data Macro 3 Write Data Slave Ratio
0x4819 8320	0x4819 A320	DATA3_REG_PHY_USE_RANK0_DELAYS	Data Macro 3 Delay Selection
0x4819 8358	0x4819 A358	DDR_VTP_CTRL_0	DDR VTP Control

9.3.5 DDR2 and DDR3 Memory Controller Electrical Data and Timing

Section 9.3.1, *DDR2 Routing Specifications* and Section 9.3.2, *DDR3 Routing Specifications* specify a complete DDR2 and DDR3 interface solution for the device. TI has performed the simulation and system characterization to ensure all DDR2 and DDR3 interface timings in this solution are met.

TI ***only*** supports board designs that follow the specifications outlined in the *DDR2 Routing Specifications* and *DDR3 Routing Specifications* sections of this data sheet.

Copyright © 2010–2015, Texas Instruments Incorporated

9.4 Emulation Features and Capability

9.4.1 Advanced Event Triggering (AET)

The device supports Advanced Event Triggering (AET). This capability can be used to debug complex problems as well as understand performance characteristics of user applications. AET provides the following capabilities:

- **Hardware Program Breakpoints:** specify addresses or address ranges that can generate events such as halting the processor or triggering the trace capture.
- **Data Watchpoints:** specify data variable addresses, address ranges, or data values that can generate events such as halting the processor or triggering the trace capture.
- **Counters:** count the occurrence of an event or cycles for performance monitoring.
- **State Sequencing:** allows combinations of hardware program breakpoints and data watchpoints to precisely generate events for complex sequences.

For more information on AET, see the following documents:

- *Using Advanced Event Triggering to Find and Fix Intermittent Real-Time Bugs* application report (literature number SPRA753)
- *Using Advanced Event Triggering to Debug Real-Time Problems in High Speed Embedded Microprocessor Systems* application report (literature number SPRA387)

9.4.2 Trace

The device supports Trace at the Cortex™-A8 and System levels. Trace is a debug technology that provides a detailed, historical account of application code execution, timing, and data accesses. Trace collects, compresses, and exports debug information for analysis. The debug information can be exported to the Embedded Trace Buffer (ETB), or to the 5-pin Trace Interface (system trace only). Trace works in real-time and does not impact the execution of the system.

For more information on board design guidelines for Trace Advanced Emulation, see the *Emulation and Trace Headers Technical Reference Manual* (literature number SPRU655).

9.4.3 IEEE 1149.1 JTAG

The JTAG (IEEE Standard 1149.1-1990 Standard-Test-Access Port and Boundary Scan Architecture) interface is used for BSDL testing and emulation of the device. The $\overline{\text{TRST}}$ pin only needs to be released when it is necessary to use a JTAG controller to debug the device or exercise the device's boundary scan functionality. For maximum reliability, the device includes an internal pulldown (IPD) on the $\overline{\text{TRST}}$ pin to ensure that $\overline{\text{TRST}}$ is always asserted upon power up and the device's internal emulation logic is always properly initialized. JTAG controllers from Texas Instruments actively drive $\overline{\text{TRST}}$ high. However, some third-party JTAG controllers may not drive $\overline{\text{TRST}}$ high but expect the use of a pullup resistor on $\overline{\text{TRST}}$. When using this type of JTAG controller, assert $\overline{\text{TRST}}$ to initialize the device after powerup and externally drive $\overline{\text{TRST}}$ high before attempting any emulation or boundary-scan operations.

The main JTAG features include:

- 32KB embedded trace buffer (ETB)
- 5-pin system trace interface for debug
- Supports Advanced Event Triggering (AET)
- All processors can be emulated via JTAG ports
- All functions on EMU pins of the device:
  - EMU[1:0] - cross-triggering, boot mode (WIR), STM trace
  - EMU[4:2] - STM trace only (single direction)
  - EMU[2] - only valid pin to use as clock

9.4.3.1 JTAG ID (JTAGID) Register Description

Table 9-28. JTAG ID Register(1)

HEX ADDRESS	ACRONYM	REGISTER NAME
0x4814 0600	JTAGID	JTAG Identification Register(2)

(1) IEEE Standard 1149.1-1990 Standard-Test-Access Port and Boundary Scan Architecture.
(2) Read-only. Provides the device 32-bit JTAG ID.

The JTAG ID register is a read-only register that identifies to the customer the JTAG device ID. For this device, the JTAG ID register resides at address location 0x4814 0600. The register hex value for the device depends on the silicon revision being used. For more information, see the *AM389x Sitara ARM Processors Silicon Errata* (literature number SPRZ327). For the actual register bit names and their associated bit field descriptions, see Figure 9-40 and Table 9-29.

31–28	27–12	11–1	0
VARIANT (4-bit)	PART NUMBER (16-bit)	MANUFACTURER (11-bit)	LSB
R-x	R-1011 1000 0001 1110	R-0000 0010 111	R-1

LEGEND: R/W = Read/Write; R = Read only; -*n* = value after reset

Figure 9-40. JTAG ID Register Description - 0x4814 0600

Table 9-29. JTAG ID Register Selection Bit Descriptions

Bit	Field	Description
31:28	VARIANT	Variant (4-bit) value. Device value: The value of this field depends on the silicon revision being used. For more information, see the *AM389x Sitara ARM Processors Silicon Errata* (literature number SPRZ327).
27:12	PART NUMBER	Part Number (16-bit) value. Device value: 0xB81E
11:1	MANUFACTURER	Manufacturer (11-bit) value. Device value: 0x017
0	LSB	LSB. This bit is read as a 1 for this device.

9.4.3.2 JTAG Electrical Data and Timing

Table 9-30. Timing Requirements for IEEE 1149.1 JTAG

(see Figure 9-41)

NO.			MIN	MAX	UNIT
1	$t_{c(TCK)}$	Cycle time, TCK	51.15		ns
1a	$t_{w(TCKH)}$	Pulse duration, TCK high (40% of t_c)	20.46		ns
1b	$t_{w(TCKL)}$	Pulse duration, TCK low (40% of t_c)	20.46		ns
3	$t_{su(TDI-TCK)}$	Input setup time, TDI valid to TCK high (20% of (t_c * 0.5))	5.115		ns
3	$t_{su(TMS-TCK)}$	Input setup time, TMS valid to TCK high (20% of (t_c * 0.5))	5.115		ns
4	$t_{h(TCK-TDI)}$	Input hold time, TDI valid from TCK high	10		ns
	$t_{h(TCK-TMS)}$	Input hold time, TMS valid from TCK high	10		ns

Table 9-31. Switching Characteristics Over Recommended Operating Conditions for IEEE 1149.1 JTAG

(see Figure 9-41)

NO.	PARAMETER		MIN	MAX	UNIT
2	$t_{d(TCKL-TDOV)}$	Delay time, TCK low to TDO valid	0	23.575(1)	ns

(1) (0.5 * t_c) - 2

Copyright © 2010–2015, Texas Instruments Incorporated

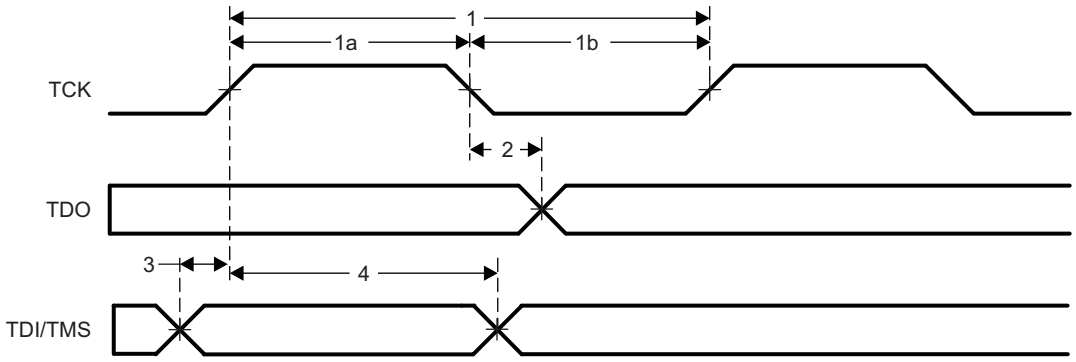

Figure 9-41. JTAG Timing

Table 9-32. Timing Requirements for IEEE 1149.1 JTAG With RTCK

(see Figure 9-41)

NO.			MIN	MAX	UNIT
1	$t_{c(TCK)}$	Cycle time, TCK	51.15		ns
1a	$t_{w(TCKH)}$	Pulse duration, TCK high (40% of t_c)	20.46		ns
1b	$t_{w(TCKL)}$	Pulse duration, TCK low (40% of t_c)	20.46		ns
3	$t_{su(TDI-TCK)}$	Input setup time, TDI valid to TCK high (20% of (t_c * 0.5))	5.115		ns
3	$t_{su(TMS-TCK)}$	Input setup time, TMS valid to TCK high (20% of (t_c * 0.5))	5.115		ns
4	$t_{h(TCK-TDI)}$	Input hold time, TDI valid from TCK high	10		ns
	$t_{h(TCK-TMS)}$	Input hold time, TMS valid from TCK high	10		ns

Table 9-33. Switching Characteristics Over Recommended Operating Conditions for IEEE 1149.1 JTAG With RTCK

(see Figure 9-42)

NO.	PARAMETER		MIN	MAX	UNIT
5	$t_{d(TCK-RTCK)}$	Delay time, TCK to RTCK with no selected subpaths (that is, ICEPick module is the only tap selected - when the ARM is in the scan chain, the delay time is a function of the ARM functional clock.)	0	21	ns
6	$t_{c(RTCK)}$	Cycle time, RTCK	51.15		ns
7	$t_{w(RTCKH)}$	Pulse duration, RTCK high (40% of t_c)	20.46		ns
8	$t_{w(RTCKL)}$	Pulse duration, RTCK low (40% of t_c)	20.46		ns

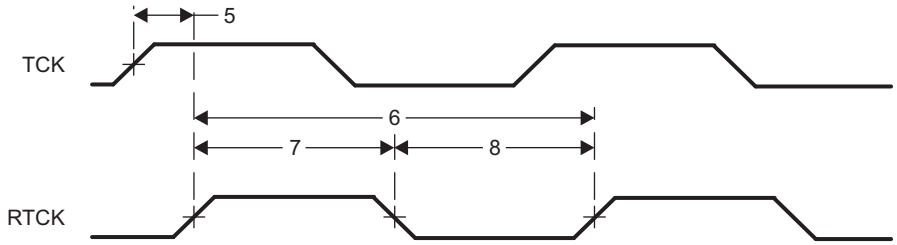

Figure 9-42. JTAG With RTCK Timing

9.4.4 IEEE 1149.7 cJTAG

Besides the standard (legacy) JTAG mode of operation, the target debug interface can also be switched to a compressed JTAG (cJTAG) mode of operation, commonly referred to as IEEE1149.7 standard. An IEEE1149.7 adapter module runs a 2-pin communication protocol on top of an IEEE1149.1 JTAG TAP. The debug-IP logic serializes the IEEE1149.1 transactions, using a variety of compression formats, to reduce the number of pins needed to implement a JTAG debug port. This device implements only a subset of the IEEE1149.7 protocol; it supports Class 0 and Class 1 operation. On this device the cJTAG ID[7:0] is tied to 0x00.

NOTE

The default setting of the scan port is IEEE 1149.1. A cJTAG emulator connected only to TCLK and TMS can re-configure the port to cJTAG by scanning in a special command sequence. For the scan sequence required to switch modes, see the IEEE1149.7 specification.

Copyright © 2010–2015, Texas Instruments Incorporated

9.5 Enhanced Direct Memory Access (EDMA) Controller

The EDMA controller handles all data transfers between memories and the device slave peripherals on the device. These data transfers include cache servicing, non-cacheable memory accesses, user-programmed data transfers, and host accesses.

9.5.1 EDMA Channel Synchronization Events

The EDMA channel controller supports up to 64 channels that service peripherals and memory. Each EDMA channel is mapped to a default EDMA synchronization event as shown in Table 9-34. By default, each event uses the parameter entry that matches its event number. However, because the device includes a channel mapping feature, each event may be mapped to any of 512 parameter table entries. For more detailed information on the EDMA module and how EDMA events are enabled, captured, processed, linked, chained, and cleared, see the EDMA chapter in the *AM389x Sitara ARM Processors Technical Reference Manual* (literature number SPRUGX7).

Table 9-34. EDMA Default Synchronization Events

EVENT NUMBER	DEFAULT EVENT NAME	DEFAULT EVENT DESCRIPTION
0 - 7	-	Unused
8	AXEVT0	McASP0 Transmit
9	AREVT0	McASP0 Receive
10	AXEVT1	McASP1 Transmit
11	AREVT1	McASP1 Receive
12	AXEVT2	McASP2 Transmit
13	AREVT2	McASP2 Receive
14	BXEVT	McBSP Transmit
15	BREVT	McBSP Receive
16	SPIXEVT0	SPI0 Transmit 0
17	SPIREVT0	SPI0 Receive 0
18	SPIXEVT1	SPI0 Transmit 1
19	SPIREVT1	SPI0 Receive 1
20	SPIXEVT2	SPI0 Transmit 2
21	SPIREVT2	SPI0 Receive 2
22	SPIXEVT3	SPI0 Transmit 3
23	SPIREVT3	SPI0 Receive 3
24	SDTXEVT	SD0 Transmit
25	SDRXEVT	SD0 Receive
26	UTXEVT0	UART0 Transmit
27	URXEVT0	UART0 Receive
28	UTXEVT1	UART1 Transmit
29	URXEVT1	UART1 Receive
30	UTXEVT2	UART2 Transmit
31	URXEVT2	UART2 Receive
32 - 47	-	Unused
48	TINT4	TIMER4
49	TINT5	TIMER5
50	TINT6	TIMER6
51	TINT7	TIMER7
52	GPMCEVT	GPMC
53	HDMIEVT	HDMI
54 - 57	-	Unused
58	I2CTXEVT0	I2C0 Transmit

Copyright © 2010–2015, Texas Instruments Incorporated

Table 9-34. EDMA Default Synchronization Events (continued)

EVENT NUMBER	DEFAULT EVENT NAME	DEFAULT EVENT DESCRIPTION
59	I2CRXEVT0	I2C0 Receive
60	I2CTXEVT1	I2C1 Transmit
61	I2CRXEVT1	I2C1 Receive
62 - 63	-	Unused

9.5.2 EDMA Peripheral Register Descriptions

Table 9-35. EDMA Channel Controller (EDMA TPCC) Control Registers

HEX ADDRESS	ACRONYM	REGISTER NAME
0x4900 0000	PID	Peripheral Identification
0x4900 0004	CCCFG	EDMA3CC Configuration
0x4900 0100 - 0x4900 01FC	DCHMAP0-63	DMA Channel 0-63 Mappings
0x4900 0200	QCHMAP0	QDMA Channel 0 Mapping
0x4900 0204	QCHMAP1	QDMA Channel 1 Mapping
0x4900 0208	QCHMAP2	QDMA Channel 2 Mapping
0x4900 020C	QCHMAP3	QDMA Channel 3 Mapping
0x4900 0210	QCHMAP4	QDMA Channel 4 Mapping
0x4900 0214	QCHMAP5	QDMA Channel 5 Mapping
0x4900 0218	QCHMAP6	QDMA Channel 6 Mapping
0x4900 021C	QCHMAP7	QDMA Channel 7 Mapping
0x4900 0240	DMAQNUM0	DMA Queue Number 0
0x4900 0244	DMAQNUM1	DMA Queue Number 1
0x4900 0248	DMAQNUM2	DMA Queue Number 2
0x4900 024C	DMAQNUM3	DMA Queue Number 3
0x4900 0250	DMAQNUM4	DMA Queue Number 4
0x4900 0254	DMAQNUM5	DMA Queue Number 5
0x4900 0258	DMAQNUM6	DMA Queue Number 6
0x4900 025C	DMAQNUM7	DMA Queue Number 7
0x4900 0260	QDMAQNUM	QDMA Queue Number
0x4900 0284	QUEPRI	Queue Priority
0x4900 0300	EMR	Event Missed
0x4900 0304	EMRH	Event Missed High
0x4900 0308	EMCR	Event Missed Clear
0x4900 030C	EMCRH	Event Missed Clear High
0x4900 0310	QEMR	QDMA Event Missed
0x4900 0314	QEMCR	QDMA Event Missed Clear
0x4900 0318	CCERR	EDMA3CC Error
0x4900 031C	CCERRCLR	EDMA3CC Error Clear
0x4900 0320	EEVAL	Error Evaluate
0x4900 0340	DRAE0	DMA Region Access Enable for Region 0
0x4900 0344	DRAEH0	DMA Region Access Enable High for Region 0
0x4900 0348	DRAE1	DMA Region Access Enable for Region 1
0x4900 034C	DRAEH1	DMA Region Access Enable High for Region 1
0x4900 0350	DRAE2	DMA Region Access Enable for Region 2
0x4900 0354	DRAEH2	DMA Region Access Enable High for Region 2
0x4900 0358	DRAE3	DMA Region Access Enable for Region 3
0x4900 035C	DRAEH3	DMA Region Access Enable High for Region 3

Copyright © 2010–2015, Texas Instruments Incorporated

Table 9-35. EDMA Channel Controller (EDMA TPCC) Control Registers (continued)

HEX ADDRESS	ACRONYM	REGISTER NAME
0x4900 0360	DRAE4	DMA Region Access Enable for Region 4
0x4900 0364	DRAEH4	DMA Region Access Enable High for Region 4
0x4900 0368	DRAE5	DMA Region Access Enable for Region 5
0x4900 036C	DRAEH5	DMA Region Access Enable High for Region 5
0x4900 0370	DRAE6	DMA Region Access Enable for Region 6
0x4900 0374	DRAEH6	DMA Region Access Enable High for Region 6
0x4900 0378	DRAE7	DMA Region Access Enable for Region 7
0x4900 037C	DRAEH7	DMA Region Access Enable High for Region 7
0x4900 0380 - 0x4900 039C	QRAE0-7	QDMA Region Access Enable for Region 0-7
0x4900 0400 - 0x4900 04FC	Q0E0-Q3E15	Event Queue Entry Q0E0-Q3E15
0x4900 0600 - 0x4900 060C	QSTAT0-3	Queue Status 0-3
0x4900 0620	QWMTHRA	Queue Watermark Threshold A
0x4900 0640	CCSTAT	EDMA3CC Status
0x4900 0800	MPFAR	Memory Protection Fault Address
0x4900 0804	MPFSR	Memory Protection Fault Status
0x4900 0808	MPFCR	Memory Protection Fault Command
0x4900 080C	MPPAG	Memory Protection Page Attribute Global
0x4900 0810 - 0x4900 082C	MPPA0-7	Memory Protection Page Attribute 0-7
0x4900 1000	ER	Event
0x4900 1004	ERH	Event High
0x4900 1008	ECR	Event Clear
0x4900 100C	ECRH	Event Clear High
0x4900 1010	ESR	Event Set
0x4900 1014	ESRH	Event Set High
0x4900 1018	CER	Chained Event
0x4900 101C	CERH	Chained Event High
0x4900 1020	EER	Event Enable
0x4900 1024	EERH	Event Enable High
0x4900 1028	EECR	Event Enable Clear
0x4900 102C	EECRH	Event Enable Clear High
0x4900 1030	EESR	Event Enable Set
0x4900 1034	EESRH	Event Enable Set High
0x4900 1038	SER	Secondary Event
0x4900 103C	SERH	Secondary Event High
0x4900 1040	SECR	Secondary Event Clear
0x4900 1044	SECRH	Secondary Event Clear High
0x4900 1050	IER	Interrupt Enable
0x4900 1054	IERH	Interrupt Enable High
0x4900 1058	IECR	Interrupt Enable Clear
0x4900 105C	IECRH	Interrupt Enable Clear High
0x4900 1060	IESR	Interrupt Enable Set
0x4900 1064	IESRH	Interrupt Enable Set High
0x4900 1068	IPR	Interrupt Pending
0x4900 106C	IPRH	Interrupt Pending High
0x4900 1070	ICR	Interrupt Clear
0x4900 1074	ICRH	Interrupt Clear High
0x4900 1078	IEVAL	Interrupt Evaluate

Copyright © 2010–2015, Texas Instruments Incorporated

Table 9-35. EDMA Channel Controller (EDMA TPCC) Control Registers (continued)

HEX ADDRESS	ACRONYM	REGISTER NAME
0x4900 1080	QER	QDMA Event
0x4900 1084	QEER	QDMA Event Enable
0x4900 1088	QEECR	QDMA Event Enable Clear
0x4900 108C	QEESR	QDMA Event Enable Set
0x4900 1090	QSER	QDMA Secondary Event
0x4900 1094	QSECR	QDMA Secondary Event Clear
Shadow Region 0 Channel Registers		
0x4900 2000	ER	Event
0x4900 2004	ERH	Event High
0x4900 2008	ECR	Event Clear
0x4900 200C	ECRH	Event Clear High
0x4900 2010	ESR	Event Set
0x4900 2014	ESRH	Event Set High
0x4900 2018	CER	Chained Event
0x4900 201C	CERH	Chained Event High
0x4900 2020	EER	Event Enable
0x4900 2024	EERH	Event Enable High
0x4900 2028	EECR	Event Enable Clear
0x4900 202C	EECRH	Event Enable Clear High
0x4900 2030	EESR	Event Enable Set
0x4900 2034	EESRH	Event Enable Set High
0x4900 2038	SER	Secondary Event
0x4900 203C	SERH	Secondary Event High
0x4900 2040	SECR	Secondary Event Clear
0x4900 2044	SECRH	Secondary Event Clear High
0x4900 2050	IER	Interrupt Enable
0x4900 2054	IERH	Interrupt Enable High
0x4900 2058	IECR	Interrupt Enable Clear
0x4900 205C	IECRH	Interrupt Enable Clear High
0x4900 2060	IESR	Interrupt Enable Set
0x4900 2064	IESRH	Interrupt Enable Set High
0x4900 2068	IPR	Interrupt Pending
0x4900 206C	IPRH	Interrupt Pending High
0x4900 2070	ICR	Interrupt Clear
0x4900 2074	ICRH	Interrupt Clear High
0x4900 2078	IEVAL	Interrupt Evaluate
0x4900 2080	QER	QDMA Event
0x4900 2084	QEER	QDMA Event Enable
0x4900 2088	QEECR	QDMA Event Enable Clear
0x4900 208C	QEESR	QDMA Event Enable Set
0x4900 2090	QSER	QDMA Secondary Event
0x4900 2094	QSECR	QDMA Secondary Event Clear
0x4900 2200 - 0x4900 2294	-	Shadow Region 1 Channels
0x4900 2400 - 0x4900 2494	-	Shadow Region 2 Channels
...		...
0x4900 2E00 - 0x4900 2E94	-	Shadow Channels for MP Space 7

Copyright © 2010–2015, Texas Instruments Incorporated

Table 9-36. EDMA Transfer Controller (EDMA TPTC) Control Registers

TPTC0 HEX ADDRESS	TPTC1 HEX ADDRESS	TPTC2 HEX ADDRESS	TPTC3 HEX ADDRESS	ACRONYM	REGISTER NAME
0x4980 0000	0x4990 0000	0x49A0 0000	0x49B0 0000	PID	Peripheral Identification
0x4980 0004	0x4990 0004	0x49A0 0004	0x49B0 0004	TCCFG	EDMA3TC Configuration
0x4980 0100	0x4990 0100	0x49A0 0100	0x49B0 0100	TCSTAT	EDMA3TC Channel Status
0x4980 0120	0x4990 0120	0x49A0 0120	0x49B0 0120	ERRSTAT	Error Status
0x4980 0124	0x4990 0124	0x49A0 0124	0x49B0 0124	ERREN	Error Enable
0x4980 0128	0x4990 0128	0x49A0 0128	0x49B0 0128	ERRCLR	Error Clear
0x4980 012C	0x4990 012C	0x49A0 012C	0x49B0 012C	ERRDET	Error Details
0x4980 0130	0x4990 0130	0x49A0 0130	0x49B0 0130	ERRCMD	Error Interrupt Command
0x4980 0140	0x4990 0140	0x49A0 0140	0x49B0 0140	RDRATE	Read Rate Register
0x4980 0240	0x4990 0240	0x49A0 0240	0x49B0 0240	SAOPT	Source Active Options
0x4980 0244	0x4990 0244	0x49A0 0244	0x49B0 0244	SASRC	Source Active Source Address
0x4980 0248	0x4990 0248	0x49A0 0248	0x49B0 0248	SACNT	Source Active Count
0x4980 024C	0x4990 024C	0x49A0 024C	0x49B0 024C	SADST	Source Active Destination Address
0x4980 0250	0x4990 0250	0x49A0 0250	0x49B0 0250	SABIDX	Source Active Source B-Index
0x4980 0254	0x4990 0254	0x49A0 0254	0x49B0 0254	SAMPPRXY	Source Active Memory Protection Proxy
0x4980 0258	0x4990 0258	0x49A0 0258	0x49B0 0258	SACNTRLD	Source Active Count Reload
0x4980 025C	0x4990 025C	0x49A0 025C	0x49B0 025C	SASRCBREF	Source Active Source Address B-Reference
0x4980 0260	0x4990 0260	0x49A0 0260	0x49B0 0260	SADSTBREF	Source Active Destination Address B-Reference
0x4980 0280	0x4990 0280	0x49A0 0280	0x49B0 0280	DFCNTRLD	Destination FIFO Set Count Reload
0x4980 0284	0x4990 0284	0x49A0 0284	0x49B0 0284	DFSRCBREF	Destination FIFO Set Destination Address B Reference
0x4980 0288	0x4990 0288	0x49A0 0288	0x49B0 0288	DFDSTBREF	Destination FIFO Set Destination Address B Reference
0x4980 0300	0x4990 0300	0x49A0 0300	0x49B0 0300	DFOPT0	Destination FIFO Options 0
0x4980 0304	0x4990 0304	0x49A0 0304	0x49B0 0304	DFSRC0	Destination FIFO Source Address 0
0x4980 0308	0x4990 0308	0x49A0 0308	0x49B0 0308	DFCNT0	Destination FIFO Count 0
0x4980 030C	0x4990 030C	0x49A0 030C	0x49B0 030C	DFDST0	Destination FIFO Destination Address 0
0x4980 0310	0x4990 0310	0x49A0 0310	0x49B0 0310	DFBIDX0	Destination FIFO BIDX 0
0x4980 0314	0x4990 0314	0x49A0 0314	0x49B0 0314	DFMPPRXY0	Destination FIFO Memory Protection Proxy 0
0x4980 0340	0x4990 0340	0x49A0 0340	0x49B0 0340	DFOPT1	Destination FIFO Options 1
0x4980 0344	0x4990 0344	0x49A0 0344	0x49B0 0344	DFSRC1	Destination FIFO Source Address 1
0x4980 0348	0x4990 0348	0x49A0 0348	0x49B0 0348	DFCNT1	Destination FIFO Count 1
0x4980 034C	0x4990 034C	0x49A0 034C	0x49B0 034C	DFDST1	Destination FIFO Destination Address 1
0x4980 0350	0x4990 0350	0x49A0 0350	0x49B0 0350	DFBIDX1	Destination FIFO BIDX 1
0x4980 0354	0x4990 0354	0x49A0 0354	0x49B0 0354	DFMPPRXY1	Destination FIFO Memory Protection Proxy 1
0x4980 0380	0x4990 0380	0x49A0 0380	0x49B0 0380	DFOPT2	Destination FIFO Options 2
0x4980 0384	0x4990 0384	0x49A0 0384	0x49B0 0384	DFSRC2	Destination FIFO Source Address 2
0x4980 0388	0x4990 0388	0x49A0 0388	0x49B0 0388	DFCNT2	Destination FIFO Count 2

Copyright © 2010–2015, Texas Instruments Incorporated

Table 9-36. EDMA Transfer Controller (EDMA TPTC) Control Registers (continued)

TPTC0 HEX ADDRESS	TPTC1 HEX ADDRESS	TPTC2 HEX ADDRESS	TPTC3 HEX ADDRESS	ACRONYM	REGISTER NAME
0x4980 038C	0x4990 038C	0x49A0 038C	0x49B0 038C	DFDST2	Destination FIFO Destination Address 2
0x4980 0390	0x4990 0390	0x49A0 0390	0x49B0 0390	DFBIDX2	Destination FIFO BIDX 2
0x4980 0394	0x4990 0394	0x49A0 0394	0x49B0 0394	DFMPPRXY2	Destination FIFO Memory Protection Proxy 2
0x4980 03C0	0x4990 03C0	0x49A0 03C0	0x49B0 03C0	DFOPT3	Destination FIFO Options 3
0x4980 03C4	0x4990 03C4	0x49A0 03C4	0x49B0 03C4	DFSRC3	Destination FIFO Source Address 3
0x4980 03C8	0x4990 03C8	0x49A0 03C8	0x49B0 03C8	DFCNT3	Destination FIFO Count 3
0x4980 03CC	0x4990 03CC	0x49A0 03CC	0x49B0 03CC	DFDST3	Destination FIFO Destination Address 3
0x4980 03D0	0x4990 03D0	0x49A0 03D0	0x49B0 03D0	DFBIDX3	Destination FIFO BIDX 3
0x4980 03D4	0x4990 03D4	0x49A0 03D4	0x49B0 03D4	DFMPPRXY3	Destination FIFO Memory Protection Proxy 3

Copyright © 2010–2015, Texas Instruments Incorporated

9.6 Ethernet Media Access Controller (EMAC)

The device includes two Ethernet Media Access Controller (EMAC) modules which provide an efficient interface between the device and the networked community. The EMAC supports 10Base-T (10 Mbits per second [Mbps]) and 100Base-TX (100 Mbps) in either half- or full-duplex mode, and 1000Base-T (1000 Mbps) in full-duplex mode, with hardware flow control and quality-of-service (QOS) support. The EMAC controls the flow of packet data from the device to an external PHY. A single MDIO interface is pinned out to control the PHY configuration and status monitoring. Multiple external PHYs can be controlled by the MDIO interface.

The EMAC module conforms to the IEEE 802.3-2002 standard, describing the *Carrier Sense Multiple Access with Collision Detection (CSMA/CD) Access Method and Physical Layer* specifications. The IEEE 802.3 standard has also been adopted by ISO/IEC and re-designated as ISO/IEC 8802-3:2000(E). Deviating from this standard, the EMAC module does not use the transmit coding error signal, MTXER. Instead of driving the error pin when an underflow condition occurs on a transmitted frame, the EMAC intentionally generates an incorrect checksum by inverting the frame CRC so that the transmitted frame is detected as an error by the network. In addition, the EMAC IOs operate at 3.3 V and are not compatible with 2.5-V IO signaling; therefore, only Ethernet PHYs with 3.3-V IO interface should be used. The EMAC module incorporates 8K bytes of internal RAM to hold EMAC buffer descriptors and contains the necessary components to enable the EMAC to make efficient use of device memory and control device interrupts.

The EMAC module on the device supports two interface modes: Media Independent Interface (MII) and Gigabit Media Independent Interface (GMII). The MII and GMII interface modes are defined in the IEEE 802.3-2002 standard. The EMAC uses the same pins for the MII and GMII modes of operation. Only one mode can be used at a time.

The MII and GMII modes-of-operation pins are as follows:

- **MII:** EMAC[1:0]_TXCLK, EMAC[1:0]_RXCLK, EMAC[1:0]_TXD[3:0], EMAC[1:0]_RXD[3:0], EMAC[1:0]_TXEN, EMAC[1:0]_RXDV, EMAC[1:0]_RXER, EMAC[1:0]_COL, EMAC[1:0]_CRS, MDIO_MCLK, and MDIO_MDIO.
- **GMII:** EMAC[1:0]_GMTCLK, EMAC[1:0]_TXCLK, EMAC[1:0]_RXCLK, EMAC[1:0]_TXD[7:0], EMAC[1:0]_RXD[7:0], EMAC[1:0]_TXEN, EMAC[1:0]_RXDV, EMAC[1:0]_RXER, EMAC[1:0]_COL, EMAC[1:0]_CRS, MDIO_MCLK, and MDIO_MDIO.

For more detailed information on the EMAC module, see the EMAC and MDIO chapter in the *AM389x Sitara ARM Processors Technical Reference Manual* (literature number SPRUGX7).

9.6.1 EMAC Peripheral Register Descriptions

Table 9-37. EMAC Control Registers

EMAC0 HEX ADDRESS	EMAC1 HEX ADDRESS	ACRONYM	REGISTER NAME
0x4A10 0000	0x4A12 0000	TXIDVER	Transmit Identification and Version
0x4A10 0004	0x4A12 0004	TXCONTROL	Transmit Control
0x4A10 0008	0x4A12 0008	TXTEARDOWN	Transmit Teardown
0x4A10 0010	0x4A12 0010	RXIDVER	Receive Identification and Version
0x4A10 0014	0x4A12 0014	RXCONTROL	Receive Control
0x4A10 0018	0x4A12 0018	RXTEARDOWN	Receive Teardown
0x4A10 0080	0x4A12 0080	TXINTSTATRAW	Transmit Interrupt Status (Unmasked)
0x4A10 0084	0x4A12 0084	TXINTSTATMASKED	Transmit Interrupt Status (Masked)
0x4A10 0088	0x4A12 0088	TXINTMASKSET	Transmit Interrupt Mask Set
0x4A10 008C	0x4A12 008C	TXINTMASKCLEAR	Transmit Interrupt Clear
0x4A10 0090	0x4A12 0090	MACINVECTOR	MAC Input Vector
0x4A10 0094	0x4A12 0094	MACEOIVECTOR	MAC End of Interrupt Vector
0x4A10 00A0	0x4A12 00A0	RXINTSTATRAW	Receive Interrupt Status (Unmasked)

Copyright © 2010–2015, Texas Instruments Incorporated

Table 9-37. EMAC Control Registers (continued)

EMAC0 HEX ADDRESS	EMAC1 HEX ADDRESS	ACRONYM	REGISTER NAME
0x4A10 00A4	0x4A12 00A4	RXINTSTATMASKED	Receive Interrupt Status (Masked)
0x4A10 00A8	0x4A12 00A8	RXINTMASKSET	Receive Interrupt Mask Set
0x4A10 00AC	0x4A12 00AC	RXINTMASKCLEAR	Receive Interrupt Mask Clear
0x4A10 00B0	0x4A12 00B0	MACINTSTATRAW	MAC Interrupt Status (Unmasked)
0x4A10 00B4	0x4A12 00B4	MACINTSTATMASKED	MAC Interrupt Status (Masked)
0x4A10 00B8	0x4A12 00B8	MACINTMASKSET	MAC Interrupt Mask Set
0x4A10 00BC	0x4A12 00BC	MACINTMASKCLEAR	MAC Interrupt Mask Clear
0x4A10 0100	0x4A12 0100	RXMBPENABLE	Receive Multicast, Broadcast, Promiscuous Channel Enable
0x4A10 0104	0x4A12 0104	RXUNICASTSET	Receive Unicast Enable Set
0x4A10 0108	0x4A12 0108	RXUNICASTCLEAR	Receive Unicast Clear
0x4A10 010C	0x4A12 010C	RXMAXLEN	Receive Maximum Length
0x4A10 0110	0x4A12 0110	RXBUFFEROFFSET	Receive Buffer Offset
0x4A10 0114	0x4A12 0114	RXFILTERLOWTHRESH	Receive Filter Low Priority Frame Threshold
0x4A10 0120	0x4A12 0120	RX0FLOWTHRESH	Receive Channel 0 Flow Control Threshold
0x4A10 0124	0x4A12 0124	RX1FLOWTHRESH	Receive Channel 1 Flow Control Threshold
0x4A10 0128	0x4A12 0128	RX2FLOWTHRESH	Receive Channel 2 Flow Control Threshold
0x4A10 012C	0x4A12 012C	RX3FLOWTHRESH	Receive Channel 3 Flow Control Threshold
0x4A10 0130	0x4A12 0130	RX4FLOWTHRESH	Receive Channel 4 Flow Control Threshold
0x4A10 0134	0x4A12 0134	RX5FLOWTHRESH	Receive Channel 5 Flow Control Threshold
0x4A10 0138	0x4A12 0138	RX6FLOWTHRESH	Receive Channel 6 Flow Control Threshold
0x4A10 013C	0x4A12 013C	RX7FLOWTHRESH	Receive Channel 7 Flow Control Threshold
0x4A10 0140	0x4A12 0140	RX0FREEBUFFER	Receive Channel 0 Free Buffer Count
0x4A10 0144	0x4A12 0144	RX1FREEBUFFER	Receive Channel 1 Free Buffer Count
0x4A10 0148	0x4A12 0148	RX2FREEBUFFER	Receive Channel 2 Free Buffer Count
0x4A10 014C	0x4A12 014C	RX3FREEBUFFER	Receive Channel 3 Free Buffer Count
0x4A10 0150	0x4A12 0150	RX4FREEBUFFER	Receive Channel 4 Free Buffer Count
0x4A10 0154	0x4A12 0154	RX5FREEBUFFER	Receive Channel 5 Free Buffer Count
0x4A10 0158	0x4A12 0158	RX6FREEBUFFER	Receive Channel 6 Free Buffer Count
0x4A10 015C	0x4A12 015C	RX7FREEBUFFER	Receive Channel 7 Free Buffer Count
0x4A10 0160	0x4A12 0160	MACCONTROL	MAC Control
0x4A10 0164	0x4A12 0164	MACSTATUS	MAC Status
0x4A10 0168	0x4A12 0168	EMCONTROL	Emulation Control
0x4A10 016C	0x4A12 016C	FIFOCONTROL	FIFO Control
0x4A10 0170	0x4A12 0170	MACCONFIG	MAC Configuration
0x4A10 0174	0x4A12 0174	SOFTRESET	Soft Reset
0x4A10 01D0	0x4A12 01D0	MACSRCADDRLO	MAC Source Address Low Bytes
0x4A10 01D4	0x4A12 01D4	MACSRCADDRHI	MAC Source Address High Bytes
0x4A10 01D8	0x4A12 01D8	MACHASH1	MAC Hash Address 1
0x4A10 01DC	0x4A12 01DC	MACHASH2	MAC Hash Address 2
0x4A10 01E0	0x4A12 01E0	BOFFTEST	Back Off Test

Copyright © 2010–2015, Texas Instruments Incorporated

Table 9-37. EMAC Control Registers (continued)

EMAC0 HEX ADDRESS	EMAC1 HEX ADDRESS	ACRONYM	REGISTER NAME
0x4A10 01E4	0x4A12 01E4	TPACETEST	Transmit Pacing Algorithm Test
0x4A10 01E8	0x4A12 01E8	RXPAUSE	Receive Pause Timer
0x4A10 01EC	0x4A12 01EC	TXPAUSE	Transmit Pause Timer
0x4A10 0200 - 0x4A10 02FC	0x4A12 0200 - 0x4A12 02FC	(see Table 9-38)	EMAC Network Statistics Registers
0x4A10 0500	0x4A12 0500	MACADDRLO	MAC Address Low Bytes, Used in Receive Address Matching
0x4A10 0504	0x4A12 0504	MACADDRHI	MAC Address High Bytes, Used in Receive Address Matching
0x4A10 0508	0x4A12 0508	MACINDEX	MAC Index
0x4A10 0600	0x4A12 0600	TX0HDP	Transmit Channel 0 DMA Head Descriptor Pointer
0x4A10 0604	0x4A12 0604	TX1HDP	Transmit Channel 1 DMA Head Descriptor Pointer
0x4A10 0608	0x4A12 0608	TX2HDP	Transmit Channel 2 DMA Head Descriptor Pointer
0x4A10 060C	0x4A12 060C	TX3HDP	Transmit Channel 3 DMA Head Descriptor Pointer
0x4A10 0610	0x4A12 0610	TX4HDP	Transmit Channel 4 DMA Head Descriptor Pointer
0x4A10 0614	0x4A12 0614	TX5HDP	Transmit Channel 5 DMA Head Descriptor Pointer
0x4A10 0618	0x4A12 0618	TX6HDP	Transmit Channel 6 DMA Head Descriptor Pointer
0x4A10 061C	0x4A12 061C	TX7HDP	Transmit Channel 7 DMA Head Descriptor Pointer
0x4A10 0620	0x4A12 0620	RX0HDP	Receive Channel 0 DMA Head Descriptor Pointer
0x4A10 0624	0x4A12 0624	RX1HDP	Receive Channel 1 DMA Head Descriptor Pointer
0x4A10 0628	0x4A12 0628	RX2HDP	Receive Channel 2 DMA Head Descriptor Pointer
0x4A10 062C	0x4A12 062C	RX3HDP	Receive Channel 3 DMA Head Descriptor Pointer
0x4A10 0630	0x4A12 0630	RX4HDP	Receive Channel 4 DMA Head Descriptor Pointer
0x4A10 0634	0x4A12 0634	RX5HDP	Receive Channel 5 DMA Head Descriptor Pointer
0x4A10 0638	0x4A12 0638	RX6HDP	Receive Channel 6 DMA Head Descriptor Pointer
0x4A10 063C	0x4A12 063C	RX7HDP	Receive Channel 7 DMA Head Descriptor Pointer
0x4A10 0640	0x4A12 0640	TX0CP	Transmit Channel 0 Completion Pointer
0x4A10 0644	0x4A12 0644	TX1CP	Transmit Channel 1 Completion Pointer
0x4A10 0648	0x4A12 0648	TX2CP	Transmit Channel 2 Completion Pointer
0x4A10 064C	0x4A12 064C	TX3CP	Transmit Channel 3 Completion Pointer
0x4A10 0650	0x4A12 0650	TX4CP	Transmit Channel 4 Completion Pointer
0x4A10 0654	0x4A12 0654	TX5CP	Transmit Channel 5 Completion Pointer
0x4A10 0658	0x4A12 0658	TX6CP	Transmit Channel 6 Completion Pointer

Copyright © 2010–2015, Texas Instruments Incorporated

Table 9-37. EMAC Control Registers (continued)

EMAC0 HEX ADDRESS	EMAC1 HEX ADDRESS	ACRONYM	REGISTER NAME
0x4A10 065C	0x4A12 065C	TX7CP	Transmit Channel 7 Completion Pointer
0x4A10 0660	0x4A12 0660	RX0CP	Receive Channel 0 Completion Pointer
0x4A10 0664	0x4A12 0664	RX1CP	Receive Channel 1 Completion Pointer
0x4A10 0668	0x4A12 0668	RX2CP	Receive Channel 2 Completion Pointer
0x4A10 066C	0x4A12 066C	RX3CP	Receive Channel 3 Completion Pointer
0x4A10 0670	0x4A12 0670	RX4CP	Receive Channel 4 Completion Pointer
0x4A10 0674	0x4A12 0674	RX5CP	Receive Channel 5 Completion Pointer
0x4A10 0678	0x4A12 0678	RX6CP	Receive Channel 6 Completion Pointer
0x4A10 067C	0x4A12 067C	RX7CP	Receive Channel 7 Completion Pointer

Table 9-38. EMAC Network Statistics Registers

EMAC0 HEX ADDRESS	EMAC1 HEX ADDRESS	ACRONYM	REGISTER NAME
0x4A10 0200	0x4A12 0200	RXGOODFRAMES	Good Receive Frames
0x4A10 0204	0x4A12 0204	RXBCASTFRAMES	Broadcast Receive Frames
0x4A10 0208	0x4A12 0208	RXMCASTFRAMES	Multicast Receive Frames
0x4A10 020C	0x4A12 020C	RXPAUSEFRAMES	Pause Receive Frames
0x4A10 0210	0x4A12 0210	RXCRCERRORS	Receive CRC Errors
0x4A10 0214	0x4A12 0214	RXALIGNCODEERRORS	Receive Alignment Code Errors
0x4A10 0218	0x4A12 0218	RXOVERSIZED	Receive Oversized Frames
0x4A10 021C	0x4A12 021C	RXJABBER	Receive Jabber Frames
0x4A10 0220	0x4A12 0220	RXUNDERSIZED	Receive Undersized Frames
0x4A10 0224	0x4A12 0224	RXFRAGMENTS	Receive Frame Fragments
0x4A10 0228	0x4A12 0228	RXFILTERED	Filtered Receive Frames
0x4A10 022C	0x4A12 022C	RXQOSFILTERED	Receive QOS Filtered Frames
0x4A10 0230	0x4A12 0230	RXOCTETS	Receive Octet Frames
0x4A10 0234	0x4A12 0234	TXGOODFRAMES	Good Transmit Frames
0x4A10 0238	0x4A12 0238	TXBCASTFRAMES	Broadcast Transmit Frames
0x4A10 023C	0x4A12 023C	TXMCASTFRAMES	Multicast Transmit Frames
0x4A10 0240	0x4A12 0240	TXPAUSEFRAMES	Pause Transmit Frames
0x4A10 0244	0x4A12 0244	TXDEFERRED	Deferred Transmit Frames
0x4A10 0248	0x4A12 0248	TXCOLLISION	Transmit Collision Frames
0x4A10 024C	0x4A12 024C	TXSINGLECOLL	Transmit Single Collision Frames
0x4A10 0250	0x4A12 0250	TXMULTICOLL	Transmit Multiple Collision Frames
0x4A10 0254	0x4A12 0254	TXEXCESSIVECOLL	Transmit Excessive Collision Frames
0x4A10 0258	0x4A12 0258	TXLATECOLL	Transmit Late Collision Frames
0x4A10 025C	0x4A12 025C	TXUNDERRUN	Transmit Underrun Error
0x4A10 0260	0x4A12 0260	TXCARRIERSENSE	Transmit Carrier Sense Errors
0x4A10 0264	0x4A12 0264	TXOCTETS	Transmit Octet Frames
0x4A10 0268	0x4A12 0268	FRAME64	Transmit and Receive 64 Octet Frames
0x4A10 026C	0x4A12 026C	FRAME65T127	Transmit and Receive 65 to 127 Octet Frames
0x4A10 0270	0x4A12 0270	FRAME128T255	Transmit and Receive 128 to 255 Octet Frames
0x4A10 0274	0x4A12 0274	FRAME256T511	Transmit and Receive 256 to 511 Octet Frames
0x4A10 0278	0x4A12 0278	FRAME512T1023	Transmit and Receive 512 to 1023 Octet Frames
0x4A10 027C	0x4A12 027C	FRAME1024TUP	Transmit and Receive 1024 to RXMAXLEN Octet Frames
0x4A10 0280	0x4A12 0280	NETOCTETS	Network Octet Frames
0x4A10 0284	0x4A12 0284	RXSOFOVERRUNS	Receive FIFO or DMA Start of Frame Overruns

Copyright © 2010–2015, Texas Instruments Incorporated

Table 9-38. EMAC Network Statistics Registers (continued)

EMAC0 HEX ADDRESS	EMAC1 HEX ADDRESS	ACRONYM	REGISTER NAME
0x4A10 0288	0x4A12 0288	RXMOFOVERRUNS	Receive FIFO or DMA Middle of Frame Overruns
0x4A10 028C	0x4A12 028C	RXDMAOVERRUNS	Receive DMA Overruns

Table 9-39. EMAC Control Module Registers

EMAC0 HEX ADDRESS	EMAC1 HEX ADDRESS	ACRONYM	REGISTER NAME
0x4A10 0900	0x4A12 0900	CMIDVER	Identification and Version
0x4A10 0904	0x4A12 0904	CMSOFTRESET	Software Reset
0x4A10 0908	0x4A12 0908	CMEMCONTROL	Emulation Control
0x4A10 090C	0x4A12 090C	CMINTCTRL	Interrupt Control
0x4A10 0910	0x4A12 0910	CMRXTHRESHINTEN	Receive Threshold Interrupt Enable
0x4A10 0914	0x4A12 0914	CMRXINTEN	Receive Interrupt Enable
0x4A10 0918	0x4A12 0918	CMTXINTEN	Transmit Interrupt Enable
0x4A10 091C	0x4A12 091C	CMMISCINTEN	Miscellaneous Interrupt Enable
0x4A10 0940	0x4A12 0940	CMRXTHRESHINTSTAT	Receive Threshold Interrupt Status
0x4A10 0944	0x4A12 0944	CMRXINTSTAT	Receive Interrupt Status
0x4A10 0948	0x4A12 0948	CMTXINTSTAT	Transmit Interrupt Status
0x4A10 094C	0x4A12 094C	CMMISCINTSTAT	Miscellaneous Interrupt Status
0x4A10 0970	0x4A12 0970	CMRXINTMAX	Receive Interrupts Per Millisecond
0x4A10 0974	0x4A12 0974	CMTXINTMAX	Transmit Interrupts Per Millisecond

Table 9-40. EMAC Descriptor Memory RAM

EMAC0 HEX ADDRESS	EMAC1 HEX ADDRESS	DESCRIPTION
0x4A10 2000 - 0x4A10 3FFF	0x4A12 2000 - 0x4A12 3FFF	EMAC Control Module Descriptor Memory

9.6.2 EMAC Electrical Data and Timing

Table 9-41. Timing Requirements for EMAC[1:0]_RXCLK - [G]MII Operation

(see Figure 9-43)

NO.			1000 Mbps (1 Gbps) (GMII Only)		100 Mbps		10 Mbps		UNIT
			MIN	MAX	MIN	MAX	MIN	MAX	
1	$t_{c(RXCLK)}$	Cycle time, EMAC[1:0]_RXCLK	8		40		400		ns
2	$t_{w(RXCLKH)}$	Pulse duration, EMAC1:0]_RXCLK high	2.8		14		140		ns
3	$t_{w(RXCLKL)}$	Pulse duration, EMAC[1:0]_RXCLK low	2.8		14		140		ns
4	$t_{t(RXCLK)}$	Transition time, EMAC[1:0]_RXCLK		1		3		3	ns

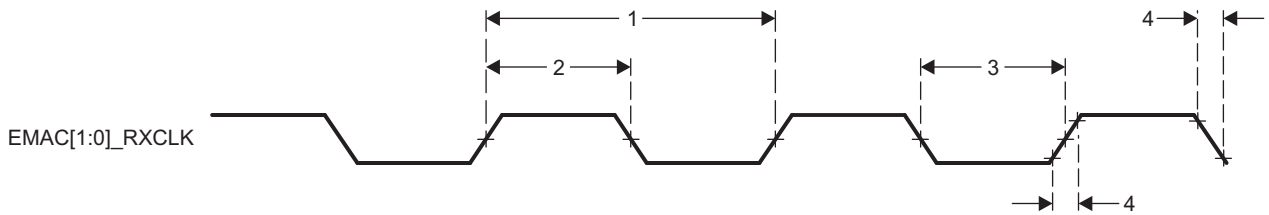

Figure 9-43. EMAC[1:0]_RXCLK Timing

Table 9-42. Timing Requirements for EMAC[1:0]_TXCLK - [G]MII Operation

(see Figure 9-44)

NO.			1000 Mbps (1 Gbps) (GMII Only)		100 Mbps		10 Mbps		UNIT
			MIN	MAX	MIN	MAX	MIN	MAX	
1	$t_{c(TXCLK)}$	Cycle time, EMAC[1:0]_TXCLK	8		40		400		ns
2	$t_{w(TXCLKH)}$	Pulse duration, EMAC[1:0]_TXCLK high	2.8		14		140		ns
3	$t_{w(TXCLKL)}$	Pulse duration, EMAC[1:0]_TXCLK low	2.8		14		140		ns
4	$t_{t(TXCLK)}$	Transition time, EMAC[1:0]_TXCLK		1		3		3	ns

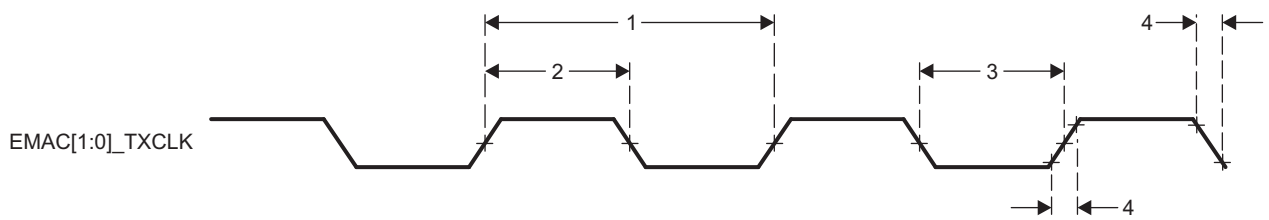

Figure 9-44. EMAC[1:0]_TXCLK Timing

Copyright © 2010–2015, Texas Instruments Incorporated

Table 9-43. Timing Requirements for EMAC [G]MII Receive 10 Mbps,100 Mbps, and 1000 Mbps

(see Figure 9-45)

NO.			1000 Mbps (1 Gbps)		100 Mbps and 10 Mbps		UNIT
			MIN	MAX	MIN	MAX	
1	$t_{su(RXD-RXCLK)}$ $t_{su(RXDV-RXCLK)}$ $t_{su(RXER-RXCLK)}$	Setup time, receive selected signals valid before EMAC[1:0]_RXCLK	2		8		ns
2	$t_{h(RXCLK-RXD)}$ $t_{h(RXCLK-RXDV)}$ $t_{h(RXCLK-RXER)}$	Hold time, receive selected signals valid after EMAC[1:0]_RXCLK	0		8		ns

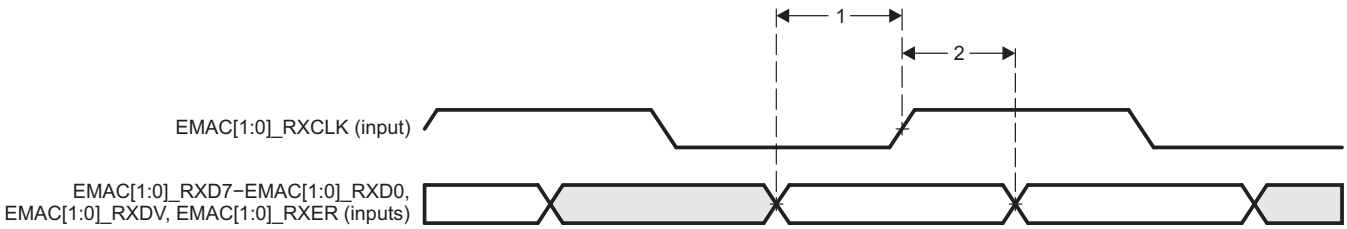

Figure 9-45. EMAC Receive Timing

Table 9-44. Switching Characteristics Over Recommended Operating Conditions for EMAC [G]MII Transmit 10 Mbps and 100 Mbps

(see Figure 9-46)

NO.	PARAMETER		100 Mbps and 10 Mbps		UNIT
			MIN	MAX	
1	$t_{d(TXCLK-TXD)}$ $t_{d(TXCLK-TXEN)}$	Delay time, EMAC[1:0]_TXCLK to transmit selected signals valid	5	25	ns

Table 9-45. Switching Characteristics Over Recommended Operating Conditions for EMAC [G]MII Transmit 1000 Mbps

(see Figure 9-46)

NO.	PARAMETER		1000 Mbps (1 Gbps)		UNIT
			MIN	MAX	
1	$t_{d(GMTCLK-TXD)}$ $t_{d(GMTCLK-TXEN)}$	Delay time, EMAC[1:0]_GMTCLK to transmit selected signals valid	0.5	5	ns

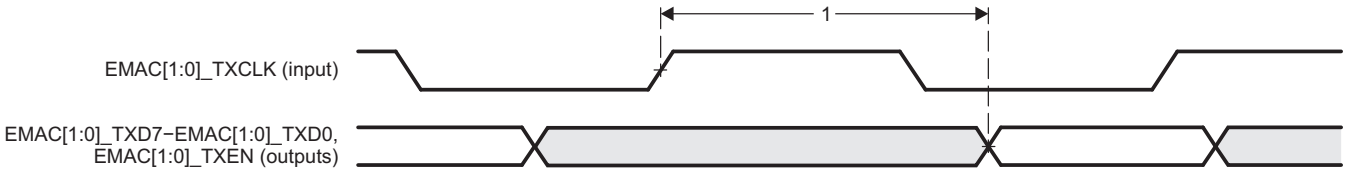

Figure 9-46. EMAC Transmit Timing

9.6.3 Management Data Input and Output (MDIO)

The Management Data Input and Output (MDIO) module continuously polls all 32 MDIO addresses in order to enumerate all PHY devices in the system.

The MDIO module implements the 802.3 serial management interface to interrogate and control Ethernet PHYs using a shared two-wire bus. Host software uses the MDIO module to configure the auto-negotiation parameters of each PHY attached to the EMAC, retrieve the negotiation results, and configure required parameters in the EMAC module for correct operation. The module is designed to allow almost transparent operation of the MDIO interface, with very little maintenance from the core processor. A single MDIO interface is pinned out to control the PHY configuration and status monitoring. Multiple external PHYs can be controlled by the MDIO interface.

For more detailed information on the MDIO peripheral, see the EMAC and MDIO chapter in the *AM389x Sitara ARM Processors Technical Reference Manual* (literature number SPRUGX7).

9.6.3.1 MDIO Peripheral Register Descriptions

Table 9-46. MDIO Registers

HEX ADDRESS	ACRONYM	REGISTER NAME
0x4A10 0800	VERSION	MDIO Version
0x4A10 0804	CONTROL	MDIO Control
0x4A10 0808	ALIVE	PHY Alive Status
0x4A10 080C	LINK	PHY Link Status
0x4A10 0810	LINKINTRAW	MDIO Link Status Change Interrupt (Unmasked)
0x4A10 0814	LINKINTMASKED	MDIO Link Status Change Interrupt (Masked)
0x4A10 0818	-	Reserved
0x4A10 081C	USERINTRAW	MDIO User Command Complete Interrupt (Unmasked)
0x4A10 0820	USERINTMASKED	MDIO User Command Complete Interrupt (Masked)
0x4A10 0824	USERINTMASKSET	MDIO User Command Complete Interrupt Mask Set
0x4A10 0828	USERINTMASKCLEAR	MDIO User Command Complete Interrupt Mask Clear
0x4A10 082C	-	Reserved
0x4A10 0880	USERACCESS0	MDIO User Access 0
0x4A10 0884	USERPHYSEL0	MDIO User PHY Select 0
0x4A10 0888	USERACCESS1	MDIO User Access 1
0x4A10 088C	USERPHYSEL1	MDIO User PHY Select 1

9.6.3.2 MDIO Electrical Data and Timing

Table 9-47. Timing Requirements for MDIO Input

(see Figure 9-47)

NO.			MIN	MAX	UNIT
1	$t_{c(MCLK)}$	Cycle time, MDIO_MCLK	400		ns
	$t_{w(MCLK)}$	Pulse duration, MDIO_MCLK high or low	180		ns
4	$t_{su(MDIO-MCLKH)}$	Setup time, MDIO_MDIO data input valid before MDIO_MCLK high	20		ns
5	$t_{h(MCLKH-MDIO)}$	Hold time, MDIO_MDIO data input valid after MDIO_MCLK high	0		ns

Copyright © 2010–2015, Texas Instruments Incorporated

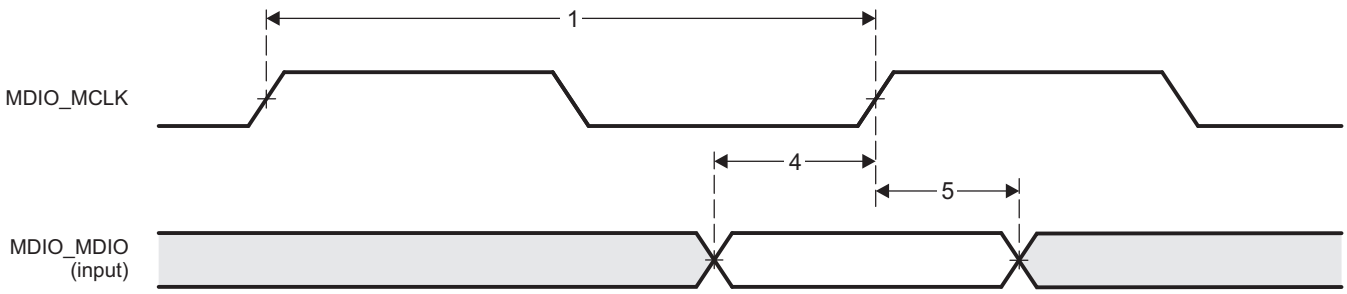

Figure 9-47. MDIO Input Timing

Table 9-48. Switching Characteristics Over Recommended Operating Conditions for MDIO Output

(see Figure 9-48)

NO.	PARAMETER		MIN	MAX	UNIT
7	$t_{d(MCLKL-MDIO)}$	Delay time, MDIO_MCLK low to MDIO_MDIO data output valid		100	ns

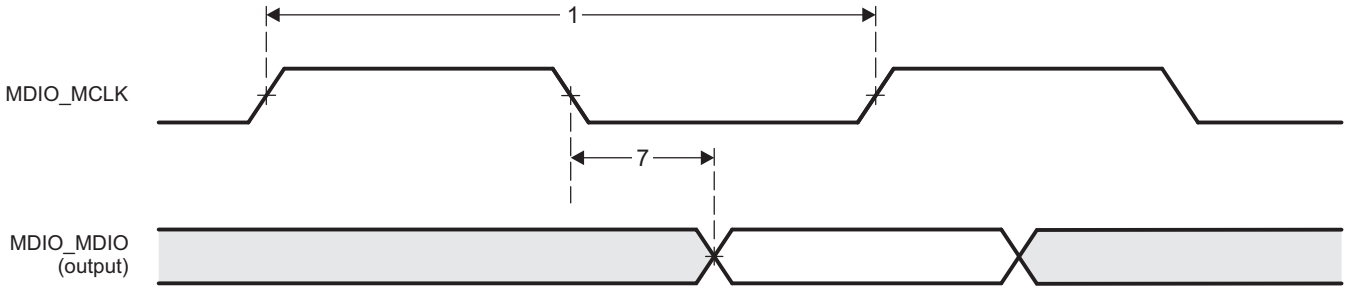

Figure 9-48. MDIO Output Timing

9.7 General-Purpose Input and Output (GPIO)

The GPIO peripheral provides general-purpose pins that can be configured as either inputs or outputs. When configured as an output, a write to an internal register controls the state driven on the output pin. When configured as an input, the state of the input is detectable by reading the state of an internal register. In addition, the GPIO peripheral can produce CPU interrupts in different interrupt generation modes. The GPIO peripheral provides generic connections to external devices.

The device contains two GPIO modules and each GPIO module is made up of 32 identical channels.

The device GPIO peripheral supports the following:

- Up to 64 3.3-V GPIO pins, GP0[31:0] and GP1[31:0] (the exact number available varies as a function of the device configuration). Each channel can be configured to be used in the following applications:
  - Data input and output
  - Keyboard interface with a de-bouncing cell
  - Synchronous interrupt generation (in active mode) upon the detection of external events (signal transitions or signal levels).
- Synchronous interrupt requests from each channel are processed by two identical interrupt generation sub-modules to be used independently by the ARM. Interrupts can be triggered by rising or falling edge, specified for each interrupt-capable GPIO signal.
- Shared registers can be accessed through "Set & Clear" protocol. Software writes 1 to corresponding bit positions to set or to clear GPIO signals. This allows multiple software processes to toggle GPIO output signals without critical section protection (disable interrupts, program GPIO, re-enable interrupts, to prevent context switching to another process during GPIO programming).
- Separate input and output registers.
- Output register in addition to set or clear so that, if preferred by software, some GPIO output signals can be toggled by direct write to the output registers.
- Output register, when read, reflects output drive status. This, in addition to the input register reflecting pin status and open-drain IO cell, allows wired logic to be implemented.

For more detailed information on GPIOs, see the GPIO chapter in the *AM389x Sitara ARM Processors Technical Reference Manual* (literature number SPRUGX7).

9.7.1 GPIO Peripheral Register Descriptions

Table 9-49. GPIO Registers

GPIO0 HEX ADDRESS	GPIO1 HEX ADDRESS	ACRONYM	REGISTER NAME
0x4803 2000	0x4804 C000	GPIO_REVISION	GPIO Revision
0x4803 2010	0x4804 C010	GPIO_SYSCONFIG	System Configuration
0x4803 2020	0x4804 C020	GPIO_EOI	End of Interrupt
0x4803 2024	0x4804 C024	GPIO_IRQSTATUS_RAW_0	Status Raw for Interrupt 1
0x4803 2028	0x4804 C028	GPIO_IRQSTATUS_RAW_1	Status Raw for Interrupt 2
0x4803 202C	0x4804 C02C	GPIO_IRQSTATUS_0	Status for Interrupt 1
0x4803 2030	0x4804 C030	GPIO_IRQSTATUS_1	Status for Interrupt 2
0x4803 2034	0x4804 C034	GPIO_IRQSTATUS_SET_0	Enable Set for Interrupt 1
0x4803 2038	0x4804 C038	GPIO_IRQSTATUS_SET_1	Enable Set for Interrupt 2
0x4803 203C	0x4804 C03C	GPIO_IRQSTATUS_CLR_0	Enable Clear for Interrupt 1
0x4803 2040	0x4804 C040	GPIO_IRQSTATUS_CLR_1	Enable Clear for Interrupt 2
0x4803 2044	0x4804 C044	GPIO_IRQWAKEN_0	Wakeup Enable for Interrupt 1
0x4803 2048	0x4804 C048	GPIO_IRQWAKEN_1	Wakeup Enable for Interrupt 2
0x4803 2114	0x4804 C114	GPIO_SYSSTATUS	System Status
0x4803 2130	0x4804 C130	GPIO_CTRL	Module Control
0x4803 2134	0x4804 C134	GPIO_OE	Output Enable

Copyright © 2010–2015, Texas Instruments Incorporated

Table 9-49. GPIO Registers (continued)

GPIO0 HEX ADDRESS	GPIO1 HEX ADDRESS	ACRONYM	REGISTER NAME
0x4803 2138	0x4804 C138	GPIO_DATAIN	Data Input
0x4803 213C	0x4804 C13C	GPIO_DATAOUT	Data Output
0x4803 2140	0x4804 C140	GPIO_LEVELDETECT0	Detect Low Level
0x4803 2144	0x4804 C144	GPIO_LEVELDETECT1	Detect High Level
0x4803 2148	0x4804 C148	GPIO_RISINGDETECT	Detect Rising Edge
0x4803 214C	0x4804 C14C	GPIO_FALLINGDETECT	Detect Falling Edge
0x4803 2150	0x4804 C150	GPIO_DEBOUNCENABLE	Debouncing Enable
0x4803 2154	0x4804 C154	GPIO_DEBOUNCINGTIME	Debouncing Value
0x4803 2190	0x4804 C190	GPIO_CLEARDATAOUT	Clear Data Output
0x4803 2194	0x4804 C194	GPIO_SETDATAOUT	Set Data Output

Copyright © 2010–2015, Texas Instruments Incorporated

9.7.2 GPIO Electrical Data and Timing

Table 9-50. Timing Requirements for GPIO Inputs

(see Figure 9-49)

NO.			MIN	MAX	UNIT
1	$t_{w(GPIH)}$	Pulse duration, GP[x] input high	12P (1)		ns
2	$t_{w(GPIL)}$	Pulse duration, GP[x] input low	12P (1)		ns

(1) P = Module clock.

Table 9-51. Switching Characteristics Over Recommended Operating Conditions for GPIO Outputs

(see Figure 9-49)

NO.	PARAMETER		MIN	MAX	UNIT
3	$t_{w(GPOH)}$	Pulse duration, GP[x] output high	36P-8 (1)		ns
4	$t_{w(GPOL)}$	Pulse duration, GP[x] output low	36P-8 (1)		ns

(1) P = Module clock.

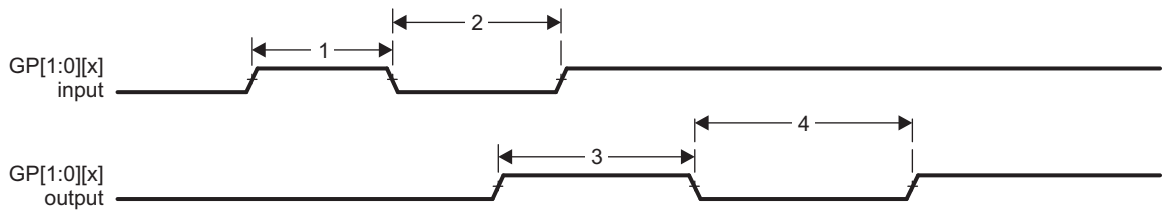

Figure 9-49. GPIO Port Timing

Copyright © 2010–2015, Texas Instruments Incorporated

9.8 General-Purpose Memory Controller (GPMC) and Error Locator Module (ELM)

The GPMC is a device memory controller used to provide a glueless interface to external memory devices such as NOR Flash, NAND Flash (with BCH and Hamming Error Code Detection for 8-bit or 16-bit NAND Flash), SRAM, and Pseudo-SRAM. It includes flexible asynchronous protocol control for interface to SRAM-like memories and custom logic (FPGA, CPLD, ASICs, and others).

The first section of GPMC memory (0x0 - 0x00FF_FFFF) is reserved for BOOTROM. Accessible memory starts at location 0x0100_0000.

Other supported features include:

- 8-bit and 6-bit wide multiplexed address and data bus
- Up to 6 chip selects with up to 256M-byte address space per chip select pin
- Non-multiplexed address and data mode
- Pre-fetch and write posting engine associated with system DMA to get full performance from NAND device with minimum impact on NOR and SRAM concurrent access.

The device also contains an Error Locator Module (ELM) which is used to extract error addresses from syndrome polynomials generated using a BCH algorithm. Each of these polynomials gives a status of the read operations for a 512 bytes block from a NAND flash and its associated BCH parity bits, plus optionally spare area information. The ELM has the following features:

- 4-bit, 8-bit, and 16-bit per 512-byte block error location based on BCH algorithms
- Eight simultaneous processing contexts
- Page-based and continuous modes
- Interrupt generation on error location process completion
  - When the full page has been processed in page mode
  - For each syndrome polynomial in continuous mode.

For more detailed information on the GPMC, see the GPMC chapter in the *AM389x Sitara ARM Processors Technical Reference Manual* (literature number SPRUGX7).

9.8.1 GPMC and ELM Peripheral Register Descriptions

Table 9-52. GPMC Registers(1)(2)

HEX ADDRESS	ACRONYM	REGISTER NAME
0x5000 0000	GPMC_REVISION	GPIO Revision
0x5000 0010	GPMC_SYSCONFIG	System Configuration
0x5000 0014	GPMC_SYSSTATUS	System Status
0x5000 0018	GPMC_IRQSTATUS	Status for Interrupt
0x5000 001C	GPMC_IRQENABLE	Interrupt Enable
0x5000 0040	GPMC_TIMEOUT_CONTROL	Timeout Counter Start Value
0x5000 0044	GPMC_ERR_ADDRESS	Error Address
0x5000 0048	GPMC_ERR_TYPE	Error Type
0x5000 0050	GPMC_CONFIG	GPMC Global Configuration
0x5000 0054	GPMC_STATUS	GPMC Global Status
0x5000 0060 + (0x0000 0030 * i)	GPMC_CONFIG1_0 - GPMC_CONFIG1_5	Parameter Configuration 1_0-5
0x5000 0064 + (0x0000 0030 * i)	GPMC_CONFIG2_0 - GPMC_CONFIG2_5	Parameter Configuration 2_0-5
0x5000 0068 + (0x0000 0030 * i)	GPMC_CONFIG3_0 - GPMC_CONFIG3_5	Parameter Configuration 3_0-5
0x5000 006C + (0x0000 0030 * i)	GPMC_CONFIG4_0 - GPMC_CONFIG4_5	Parameter Configuration 4_0-5

(1) i = 0 to 5.
(2) j = 0 to 8.

Table 9-52. GPMC Registers[(1)(2)] (continued)

HEX ADDRESS	ACRONYM	REGISTER NAME
0x5000 0070 + (0x0000 0030 * i)	GPMC_CONFIG5_0 - GPMC_CONFIG5_5	Parameter Configuration 5_0-5
0x5000 0074 + (0x0000 0030 * i)	GPMC_CONFIG6_0 - GPMC_CONFIG6_5	Parameter Configuration 6_0-5
0x5000 0078 + (0x0000 0030 * i)	GPMC_CONFIG7_0 - GPMC_CONFIG7_5	Parameter Configuration 7_0-5
0x5000 007C + (0x0000 0030 * i)	GPMC_NAND_COMMAND_0 - GPMC_NAND_COMMAND_5	NAND Command 0-5
0x5000 0080 + (0x0000 0030 * i)	GPMC_NAND_ADDRESS_0 - GPMC_NAND_ADDRESS_5	NAND Address 0-5
0x5000 0084 + (0x0000 0030 * i)	GPMC_NAND_DATA_0 - GPMC_NAND_DATA_5	NAND Data 0-5
0x5000 01E0	GPMC_PREFETCH_CONFIG1	Prefetch Configuration 1
0x5000 01E4	GPMC_PREFETCH_CONFIG2	Prefetch Configuration 2
0x5000 01EC	GPMC_PREFETCH_CONTROL	Prefetch Control
0x5000 01F0	GPMC_PREFETCH_STATUS	Prefetch Status
0x5000 01F4	GPMC_ECC_CONFIG	ECC Configuration
0x5000 01F8	GPMC_ECC_CONTROL	ECC Control
0x5000 01FC	GPMC_ECC_SIZE_CONFIG	ECC Size Configuration
0x5000 0200 + (0x0000 0004 * j)	GPMC_ECC0_RESULT - GPMC_ECC8_RESULT	ECC0-8 Result
0x5000 0240 + (0x0000 0010 * i)	GPMC_BCH_RESULT0_0 - GPMC_BCH_RESULT0_5	BCH Result 0_0-5
0x5000 0244 + (0x0000 0010 * i)	GPMC_BCH_RESULT1_0 - GPMC_BCH_RESULT1_5	BCH Result 1_0-5
0x5000 0248 + (0x0000 0010 * i)	GPMC_BCH_RESULT2_0 - GPMC_BCH_RESULT2_5	BCH Result 2_0-5
0x5000 024C + (0x0000 0010 * i)	GPMC_BCH_RESULT3_0 - GPMC_BCH_RESULT3_5	BCH Result 3_0-5
0x5000 0300 + (0x0000 0010 * i)	GPMC_BCH_RESULT4_0 - GPMC_BCH_RESULT4_5	BCH Result 4_0-5
0x5000 0304 + (0x0000 0010 * i)	GPMC_BCH_RESULT5_0 - GPMC_BCH_RESULT5_5	BCH Result 5_0-5
0x5000 0308 + (0x0000 0010 * i)	GPMC_BCH_RESULT6_0 - GPMC_BCH_RESULT6_5	BCH Result 6_0-5
0x5000 02D0	GPMC_BCH_SWDATA	BCH Data

Table 9-53. ELM Registers[(1)]

HEX ADDRESS	ACRONYM	REGISTER NAME
0x4808 0000	ELM_REVISION	Revision
0x4808 0010	ELM_SYSCONFIG	Configuration
0x4808 0014	ELM_SYSSTATUS	Status
0x4808 0018	ELM_IRQSTATUS	Interrupt status
0x4808 001C	ELM_IRQENABLE	Interrupt enable
0x4808 0020	ELM_LOCATION_CONFIG	ECC algorithm parameters
0x4808 0080	ELM_PAGE_CTRL	Page definition
0x4808 0400 + (0x40 * i)	ELM_SYNDROME_FRAGMENT_0_i	Input syndrome polynomial bits 0 to 31
0x4808 0404 + (0x40 * i)	ELM_SYNDROME_FRAGMENT_1_i	Input syndrome polynomial bits 32 to 63
0x4808 0408 + (0x40 * i)	ELM_SYNDROME_FRAGMENT_2_i	Input syndrome polynomial bits 64 to 95
0x4808 040C + (0x40 * i)	ELM_SYNDROME_FRAGMENT_3_i	Input syndrome polynomial bits 96 to 127
0x4808 0410 + (0x40 * i)	ELM_SYNDROME_FRAGMENT_4_i	Input syndrome polynomial bits 128 to 159

(1) i = 0 to 7.

Copyright © 2010–2015, Texas Instruments Incorporated

Table 9-53. ELM Registers[(1)] (continued)

HEX ADDRESS	ACRONYM	REGISTER NAME
0x4808 0414 + (0x40 * i)	ELM_SYNDROME_FRAGMENT_5_i	Input syndrome polynomial bits 160 to 191
0x4808 0418 + (0x40 * i)	ELM_SYNDROME_FRAGMENT_6_i	Input syndrome polynomial bits 192 to 207
0x4808 0800 + (0x100 * i)	ELM_LOCATION_STATUS_i	Exit status
0x4808 0880 + (0x100 * i)	ELM_ERROR_LOCATION_0_i	Error location
0x4808 0884 + (0x100 * i)	ELM_ERROR_LOCATION_1_i	Error location
0x4808 0888 + (0x100 * i)	ELM_ERROR_LOCATION_2_i	Error location
0x4808 088C + (0x100 * i)	ELM_ERROR_LOCATION_3_i	Error location
0x4808 0890 + (0x100 * i)	ELM_ERROR_LOCATION_4_i	Error location
0x4808 0894 + (0x100 * i)	ELM_ERROR_LOCATION_5_i	Error location
0x4808 0898 + (0x100 * i)	ELM_ERROR_LOCATION_6_i	Error location
0x4808 089C + (0x100 * i)	ELM_ERROR_LOCATION_7_i	Error location
0x4808 08A0 + (0x100 * i)	ELM_ERROR_LOCATION_8_i	Error location
0x4808 08A4 + (0x100 * i)	ELM_ERROR_LOCATION_9_i	Error location
0x4808 08A8 + (0x100 * i)	ELM_ERROR_LOCATION_10_i	Error location
0x4808 08AC + (0x100 * i)	ELM_ERROR_LOCATION_11_i	Error location
0x4808 08B0 + (0x100 * i)	ELM_ERROR_LOCATION_12_i	Error location
0x4808 08B4 + (0x100 * i)	ELM_ERROR_LOCATION_13_i	Error location
0x4808 08B8 + (0x100 * i)	ELM_ERROR_LOCATION_14_i	Error location
0x4808 08BC + (0x100 * i)	ELM_ERROR_LOCATION_15_i	Error location

Copyright © 2010–2015, Texas Instruments Incorporated

9.8.2 GPMC Electrical Data and Timing

9.8.2.1 GPMC and NOR Flash Interface Synchronous Mode Timing

Table 9-54. Timing Requirements for GPMC and NOR Flash Interface - Synchronous Mode

(see Figure 9-50, Figure 9-51, Figure 9-52, Figure 9-53, Figure 9-54, Figure 9-55)

NO.			MIN	MAX	UNIT
13	$t_{su(DV-CLKH)}$	Setup time, read GPMC_D[15:0] valid before GPMC_CLK high	3.2		ns
14	$t_{h(CLKH-DV)}$	Hold time, read GPMC_D[15:0] valid after GPMC_CLK high	2.5		ns
22	$t_{su(WAITV-CLKH)}$	Setup time, GPMC_WAIT valid before GPMC_CLK high	3.2		ns
23	$t_{h(CLKH-WAITV)}$	Hold time, GPMC_WAIT valid after GPMC_CLK high	2.5		ns

Table 9-55. Switching Characteristics Over Recommended Operating Conditions for GPMC and NOR Flash Interface - Synchronous Mode

(see Figure 9-50, Figure 9-51, Figure 9-52, Figure 9-53, Figure 9-54, Figure 9-55)

NO.	PARAMETER		MIN	MAX	UNIT
1	$t_{c(CLK)}$	Cycle time, output clock GPMC_CLK period	16 (1)		ns
2	$t_{w(CLKH)}$	Pulse duration, output clock GPMC_CLK high	0.5P (2)		ns
	$t_{w(CLKL)}$	Pulse duration, output clock GPMC_CLK low	0.5P (2)		
3	$t_{d(CLKH-nCSV)}$	Delay time, GPMC_CLK rising edge to $\overline{\text{GPMC_CS[x]}}$ transition	F - 2.2 (3)	F + 4.5 (3)	ns
4	$t_{d(CLKH-nCSIV)}$	Delay time, GPMC_CLK rising edge to $\overline{\text{GPMC_CS[x]}}$ invalid	E - 2.2 (4)	E + 4.5 (4)	ns
5	$t_{d(ADDV-CLK)}$	Delay time, GPMC_A[27:0] address bus valid to GPMC_CLK first edge	B - 4.5 (5)	B + 2.3 (5)	ns
6	$t_{d(CLKH-ADDIV)}$	Delay time, GPMC_CLK rising edge to GPMC_A[27:0] GPMC address bus invalid	-2.3		ns
7	$t_{d(nBEV-CLK)}$	Delay time, GPMC_$\overline{\text{BE0}}$_CLE, $\overline{\text{GPMC_BE1}}$ valid to GPMC_CLK first edge	B - 1.9 (5)	B + 2.3 (5)	ns
8	$t_{d(CLKH-nBEIV)}$	Delay time, GPMC_CLK rising edge to GPMC_$\overline{\text{BE0}}$_CLE, $\overline{\text{GPMC_BE1}}$ invalid	D - 2.3 (6)	D + 1.9 (6)	ns

(1) Sync mode = 62.5 MHz; Async mode = 125 MHz.
(2) P = GPMC_CLK period.
(3) For nCS falling edge (CS activated):
- For GpmcFCLKDivider = 0:
  F = 0.5 * CSExtraDelay * GPMC_FCLK
- For GpmcFCLKDivider = 1:
  F = 0.5 * CSExtraDelay * GPMC_FCLK if (ClkActivationTime and CSOnTime are odd) or (ClkActivationTime and CSOnTime are even)
  F = (1 + 0.5 * CSExtraDelay) * GPMC_FCLK otherwise
- For GpmcFCLKDivider = 2:
  F = 0.5 * CSExtraDelay * GPMC_FCLK if ((CSOnTime - ClkActivationTime) is a multiple of 3)
  F = (1 + 0.5 * CSExtraDelay) * GPMC_FCLK if ((CSOnTime - ClkActivationTime - 1) is a multiple of 3)
  F = (2 + 0.5 * CSExtraDelay) * GPMC_FCLK if ((CSOnTime - ClkActivationTime - 2) is a multiple of 3)

(4) For single read: E = (CSRdOffTime - AccessTime) * (TimeParaGranularity + 1) * GPMC_FCLK
For burst read: E = (CSRdOffTime - AccessTime) * (TimeParaGranularity + 1) * GPMC_FCLK
For burst write: E = (CSWrOffTime - AccessTime) * (TimeParaGranularity + 1) * GPMC_FCLK
(5) B = ClkActivationTime * GPMC_FCLK
(6) For single read: D = (RdCycleTime - AccessTime) * (TimeParaGranularity + 1) * GPMC_FCLK
For burst read: D = (RdCycleTime - AccessTime) * (TimeParaGranularity + 1) * GPMC_FCLK
For burst write: D = (WrCycleTime - AccessTime) * (TimeParaGranularity + 1) * GPMC_FCLK

Copyright © 2010–2015, Texas Instruments Incorporated

Table 9-55. Switching Characteristics Over Recommended Operating Conditions for GPMC and NOR Flash Interface - Synchronous Mode (continued)

(see Figure 9-50, Figure 9-51, Figure 9-52, Figure 9-53, Figure 9-54, Figure 9-55)

NO.	PARAMETER		MIN	MAX	UNIT
9	$t_{d(CLKH-nADV)}$	Delay time, GPMC_CLK rising edge to GPMC_$\overline{ADV}$_ALE transition	G - 2.3(7)	G + 4.5(7)	ns
10	$t_{d(CLKH-nADVIV)}$	Delay time, GPMC_CLK rising edge to GPMC_$\overline{ADV}$_ALE invalid	D - 2.3(6)	D + 4.5(6)	ns
11	$t_{d(CLKH-nOE)}$	Delay time, GPMC_CLK rising edge to $\overline{GPMC_OE_RE}$ transition	H - 2.3(8)	H + 3.5(8)	ns
12	$t_{d(CLKH-nOEIV)}$	Delay time, GPMC_CLK rising edge to $\overline{GPMC_OE_RE}$ invalid	E - 2.3(4)	E + 3.5(4)	ns

(7) For ADV falling edge (ADV activated):
- Case GpmcFCLKDivider = 0:
  G = 0.5 * ADVExtraDelay * GPMC_FCLK
- Case GpmcFCLKDivider = 1:
  G = 0.5 * ADVExtraDelay * GPMC_FCLK if (ClkActivationTime and ADVOnTime are odd) or (ClkActivationTime and ADVOnTime are even)
  G = (1 + 0.5 * ADVExtraDelay) * GPMC_FCLK otherwise
- Case GpmcFCLKDivider = 2:
  G = 0.5 * ADVExtraDelay * GPMC_FCLK if ((ADVOnTime - ClkActivationTime) is a multiple of 3)
  G = (1 + 0.5 * ADVExtraDelay) * GPMC_FCLK if ((ADVOnTime - ClkActivationTime - 1) is a multiple of 3)
  G = (2 + 0.5 * ADVExtraDelay) * GPMC_FCLK if ((ADVOnTime - ClkActivationTime - 2) is a multiple of 3)

For ADV rising edge (ADV deactivated) in Reading mode:
- Case GpmcFCLKDivider = 0:
  G = 0.5 * ADVExtraDelay * GPMC_FCLK
- Case GpmcFCLKDivider = 1:
  G = 0.5 * ADVExtraDelay * GPMC_FCLK if (ClkActivationTime and ADVRdOffTime are odd) or (ClkActivationTime and ADVRdOffTime are even)
  G = (1 + 0.5 * ADVExtraDelay) * GPMC_FCLK otherwise
- Case GpmcFCLKDivider = 2:
  G = 0.5 * ADVExtraDelay * GPMC_FCLK if ((ADVRdOffTime - ClkActivationTime) is a multiple of 3)
  G = (1 + 0.5 * ADVExtraDelay) * GPMC_FCLK if ((ADVRdOffTime - ClkActivationTime - 1) is a multiple of 3)
  G = (2 + 0.5 * ADVExtraDelay) * GPMC_FCLK if ((ADVRdOffTime - ClkActivationTime - 2) is a multiple of 3)

For ADV rising edge (ADV deactivated) in Writing mode:
- Case GpmcFCLKDivider = 0:
  G = 0.5 * ADVExtraDelay * GPMC_FCLK
- Case GpmcFCLKDivider = 1:
  G = 0.5 * ADVExtraDelay * GPMC_FCLK if (ClkActivationTime and ADVWrOffTime are odd) or (ClkActivationTime and ADVWrOffTime are even)
  G = (1 + 0.5 * ADVExtraDelay) * GPMC_FCLK otherwise
- Case GpmcFCLKDivider = 2:
  G = 0.5 * ADVExtraDelay * GPMC_FCLK if ((ADVWrOffTime - ClkActivationTime) is a multiple of 3)
  G = (1 + 0.5 * ADVExtraDelay) * GPMC_FCLK if ((ADVWrOffTime - ClkActivationTime - 1) is a multiple of 3)
  G = (2 + 0.5 * ADVExtraDelay) * GPMC_FCLK if ((ADVWrOffTime - ClkActivationTime - 2) is a multiple of 3)

(8) For OE falling edge (OE activated) or IO DIR rising edge (IN direction) :
- Case GpmcFCLKDivider = 0:
  H = 0.5 * OEExtraDelay * GPMC_FCLK
- Case GpmcFCLKDivider = 1:
  H = 0.5 * OEExtraDelay * GPMC_FCLK if (ClkActivationTime and OEOnTime are odd) or (ClkActivationTime and OEOnTime are even)
  H = (1 + 0.5 * OEExtraDelay) * GPMC_FCLK otherwise
- Case GpmcFCLKDivider = 2:
  H = 0.5 * OEExtraDelay * GPMC_FCLK if ((OEOnTime - ClkActivationTime) is a multiple of 3)
  H = (1 + 0.5 * OEExtraDelay) * GPMC_FCLK if ((OEOnTime - ClkActivationTime - 1) is a multiple of 3)
  H = (2 + 0.5 * OEExtraDelay) * GPMC_FCLK if ((OEOnTime - ClkActivationTime - 2) is a multiple of 3)

For OE rising edge (OE deactivated):
- Case GpmcFCLKDivider = 0:
  H = 0.5 * OEExtraDelay * GPMC_FCLK
- Case GpmcFCLKDivider = 1:
  H = 0.5 * OEExtraDelay * GPMC_FCLK if (ClkActivationTime and OEOffTime are odd) or (ClkActivationTime and OEOffTime are even)
  H = (1 + 0.5 * OEExtraDelay) * GPMC_FCLK otherwise
- Case GpmcFCLKDivider = 2:
  H = 0.5 * OEExtraDelay * GPMC_FCLK if ((OEOffTime - ClkActivationTime) is a multiple of 3)
  H = (1 + 0.5 * OEExtraDelay) * GPMC_FCLK if ((OEOffTime - ClkActivationTime - 1) is a multiple of 3)
  H = (2 + 0.5 * OEExtraDelay) * GPMC_FCLK if ((OEOffTime - ClkActivationTime - 2) is a multiple of 3)

Copyright © 2010–2015, Texas Instruments Incorporated

Table 9-55. Switching Characteristics Over Recommended Operating Conditions for GPMC and NOR Flash Interface - Synchronous Mode (continued)

(see Figure 9-50, Figure 9-51, Figure 9-52, Figure 9-53, Figure 9-54, Figure 9-55)

NO.	PARAMETER		MIN	MAX	UNIT
15	$t_{d(CLKH-nWE)}$	Delay time, GPMC_CLK rising edge to $\overline{GPMC_WE}$ transition	I - 2.3 (9)	I + 4.5 (9)	ns
16	$t_{d(CLKH-Data)}$	Delay time, GPMC_CLK rising edge to GPMC_D[15:0] data bus transition	J - 2.3 (10)	J + 1.9 (10)	ns
18	$t_{d(CLKH-nBE)}$	Delay time, GPMC_CLK rising edge to GPMC_$\overline{BE0}$_CLE, $\overline{GPMC_BE1}$ transition	J - 2.3 (10)	J + 1.9 (10)	ns
19	$t_{w(nCSV)}$	Pulse duration, $\overline{GPMC_CS[x]}$ low	A (11)		ns
20	$t_{w(nBEV)}$	Pulse duration, GPMC_$\overline{BE0}$_CLE, $\overline{GPMC_BE1}$ low	C (12)		ns
21	$t_{w(nADVV)}$	Pulse duration, GPMC_$\overline{ADV}$_ALE low	K (13)		ns
24	$t_{d(CLKH-DIR)}$	Delay time, GPMC_CLK rising edge to GPMC_DIR high (IN direction)	H - 2.3 (8)	H + 4.5 (8)	ns
25	$t_{d(CLKH-DIRIV)}$	Delay time, GPCM_CLK rising edge to GPMC_DIR low (OUT direction)	M - 2.3 (14)	M + 4.5 (14)	ns

(9) For WE falling edge (WE activated):
- Case GpmcFCLKDivider = 0:
  I = 0.5 * WEExtraDelay * GPMC_FCLK
- Case GpmcFCLKDivider = 1:
  I = 0.5 * WEExtraDelay * GPMC_FCLK if (ClkActivationTime and WEOnTime are odd) or (ClkActivationTime and WEOnTime are even)
  I = (1 + 0.5 * WEExtraDelay) * GPMC_FCLK otherwise
- Case GpmcFCLKDivider = 2:
  I = 0.5 * WEExtraDelay * GPMC_FCLK if ((WEOnTime - ClkActivationTime) is a multiple of 3)
  I = (1 + 0.5 * WEExtraDelay) * GPMC_FCLK if ((WEOnTime - ClkActivationTime - 1) is a multiple of 3)
  I = (2 + 0.5 * WEExtraDelay) * GPMC_FCLK if ((WEOnTime - ClkActivationTime - 2) is a multiple of 3)

For WE rising edge (WE deactivated):
- Case GpmcFCLKDivider = 0:
  I = 0.5 * WEExtraDelay * GPMC_FCLK
- Case GpmcFCLKDivider = 1:
  I = 0.5 * WEExtraDelay * GPMC_FCLK if (ClkActivationTime and WEOffTime are odd) or (ClkActivationTime and WEOffTime are even)
  I = (1 + 0.5 * WEExtraDelay) * GPMC_FCLK otherwise
- Case GpmcFCLKDivider = 2:
  I = 0.5 * WEExtraDelay * GPMC_FCLK if ((WEOffTime - ClkActivationTime) is a multiple of 3)
  I = (1 + 0.5 * WEExtraDelay) * GPMC_FCLK if ((WEOffTime - ClkActivationTime - 1) is a multiple of 3)
  I = (2 + 0.5 * WEExtraDelay) * GPMC_FCLK if ((WEOffTime - ClkActivationTime - 2) is a multiple of 3)

(10) J = GPMC_FCLK period.

(11) For single read: A = (CSRdOffTime - CSOnTime) * (TimeParaGranularity + 1) * GPMC_FCLK period
For burst read: A = (CSRdOffTime - CSOnTime + (n - 1) * PageBurstAccessTime) * (TimeParaGranularity + 1) * GPMC_FCLK period [n = page burst access number]
For burst write: A = (CSWrOffTime - CSOnTime + (n - 1) * PageBurstAccessTime) * (TimeParaGranularity + 1) * GPMC_FCLK period [n = page burst access number]

(12) For single read: C = RdCycleTime * (TimeParaGranularity + 1) * GPMC_FCLK
For burst read: C = (RdCycleTime + (n - 1) * PageBurstAccessTime) * (TimeParaGranularity + 1) * GPMC_FCLK [n = page burst access number]
For Burst write: C = (WrCycleTime + (n - 1) * PageBurstAccessTime) * (TimeParaGranularity + 1) * GPMC_FCLK [n = page burst access number]

(13) For read: K = (ADVRdOffTime - ADVOnTime) * (TimeParaGranularity + 1) * GPMC_FCLK
For write: K = (ADVWrOffTime - ADVOnTime) * (TimeParaGranularity + 1) * GPMC_FCLK

(14) M = (RdCycleTime - AccessTime) * (TimeParaGranularity + 1) * GPMC_FCLK.
Parameter M expression is given as one example of GPMC programming. The IO DIR signal goes from IN to OUT after both RdCycleTime and BusTurnAround completion. Behavior of the IO direction signal depends on the kind of successive read and write accesses performed to the memory and multiplexed or non-multiplexed memory addressing scheme, whether the bus keeping feature is enabled or not. The IO DIR behavior is automatically handled by the GPMC controller.

Copyright © 2010–2015, Texas Instruments Incorporated

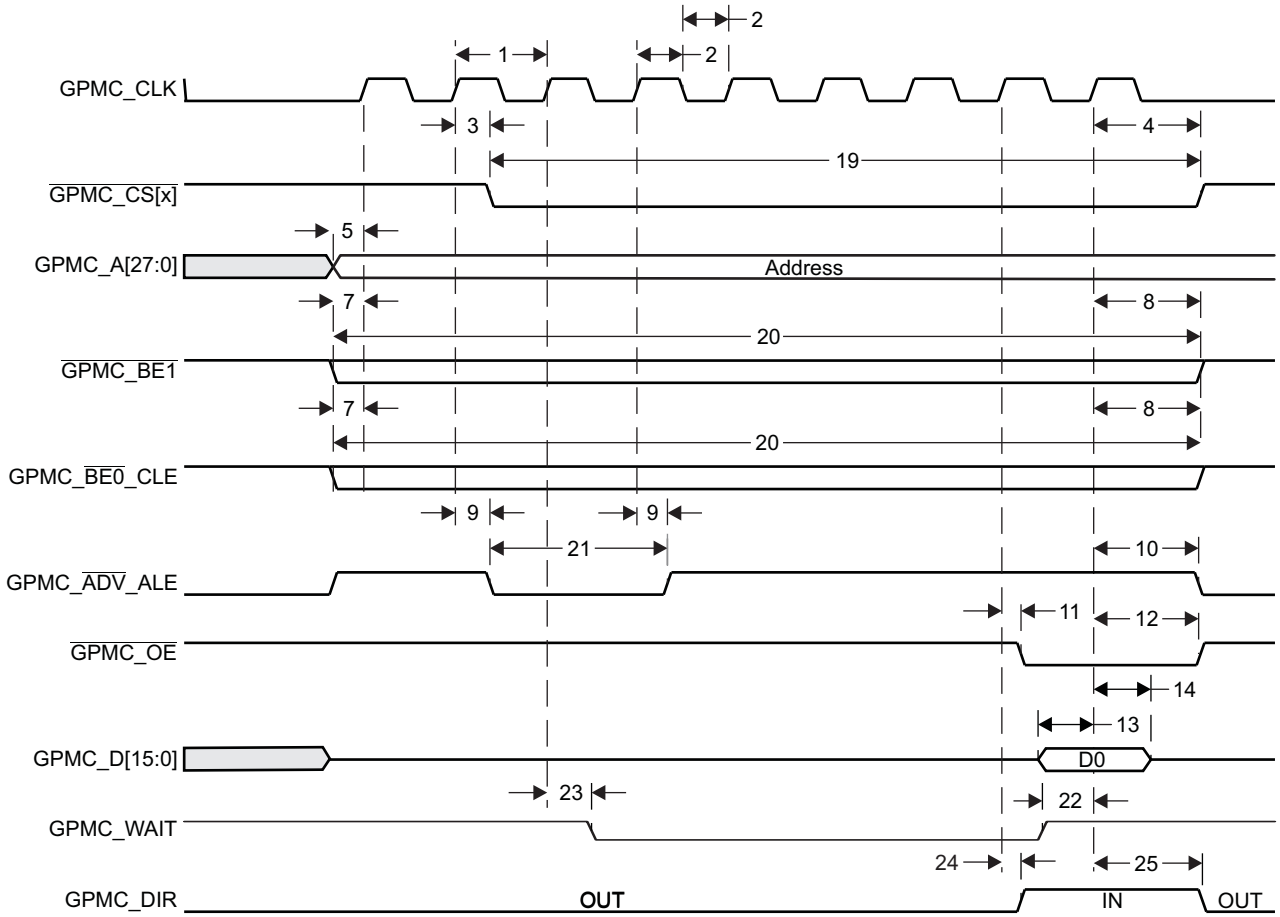

Figure 9-50. GPMC Non-Multiplexed NOR Flash - Synchronous Single Read (GPMCFCLKDIVIDER = 0)

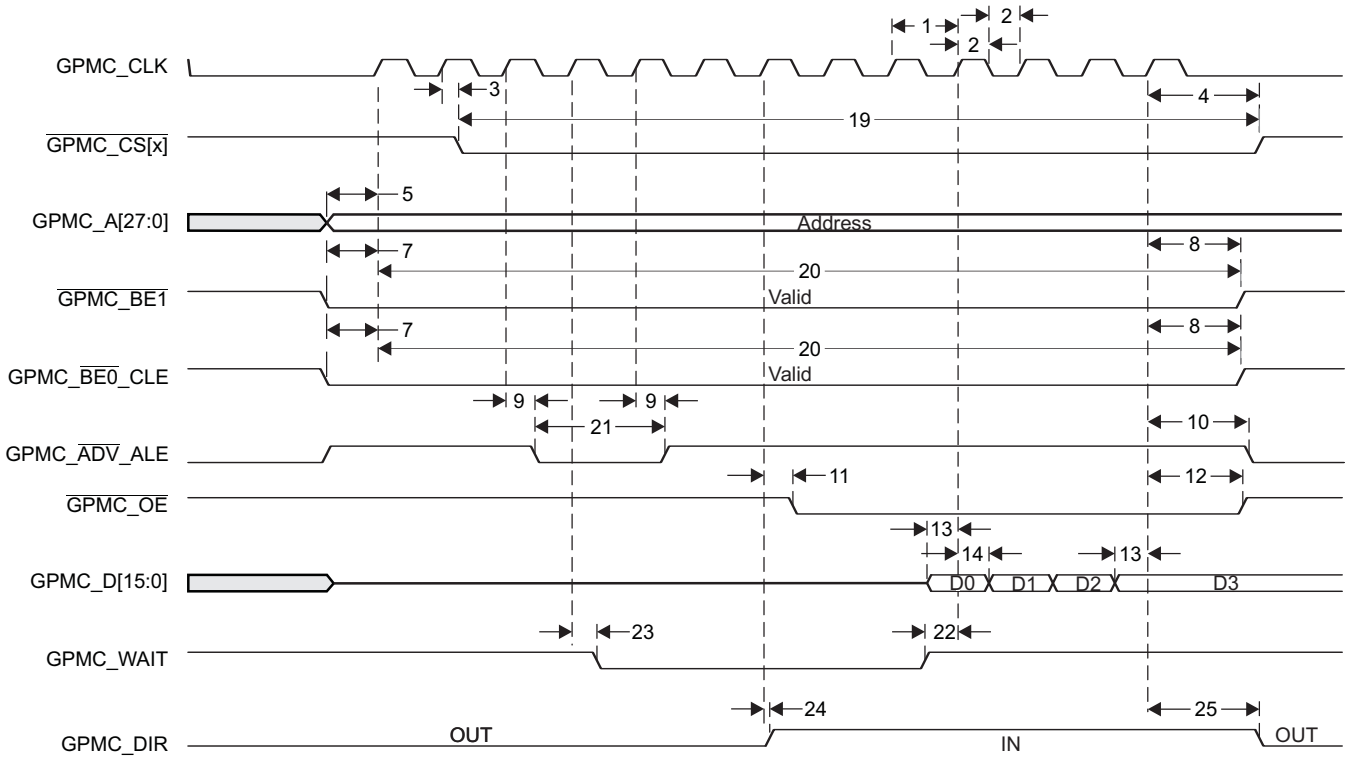

Figure 9-51. GPMC Non-Multiplexed NOR Flash - 4x16-bit Synchronous Burst Read (GPMCFCLKDIVIDER = 0)

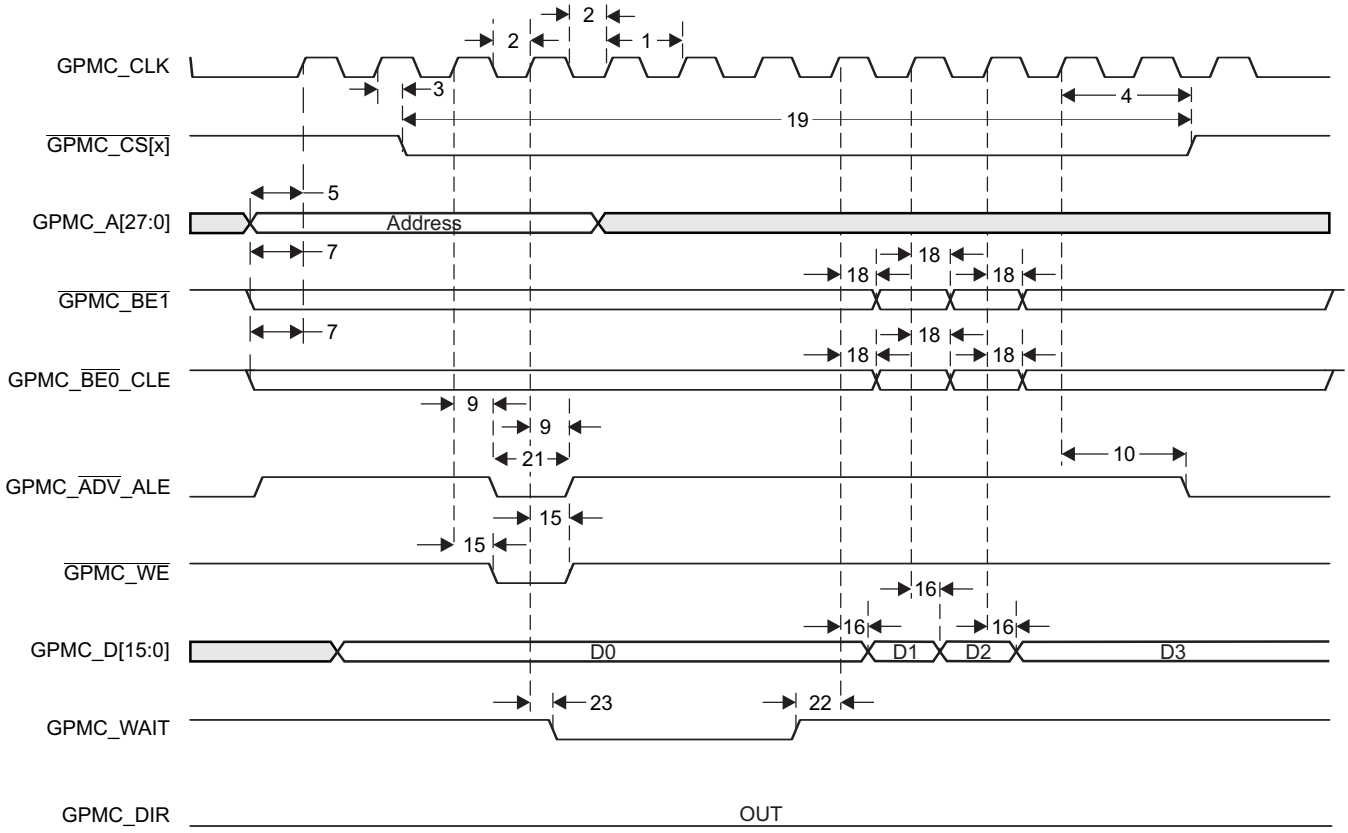

Figure 9-52. GPMC Non-Multiplexed NOR Flash - Synchronous Burst Write (GPMCFCLKDIVIDER = 0)

Copyright © 2010–2015, Texas Instruments Incorporated

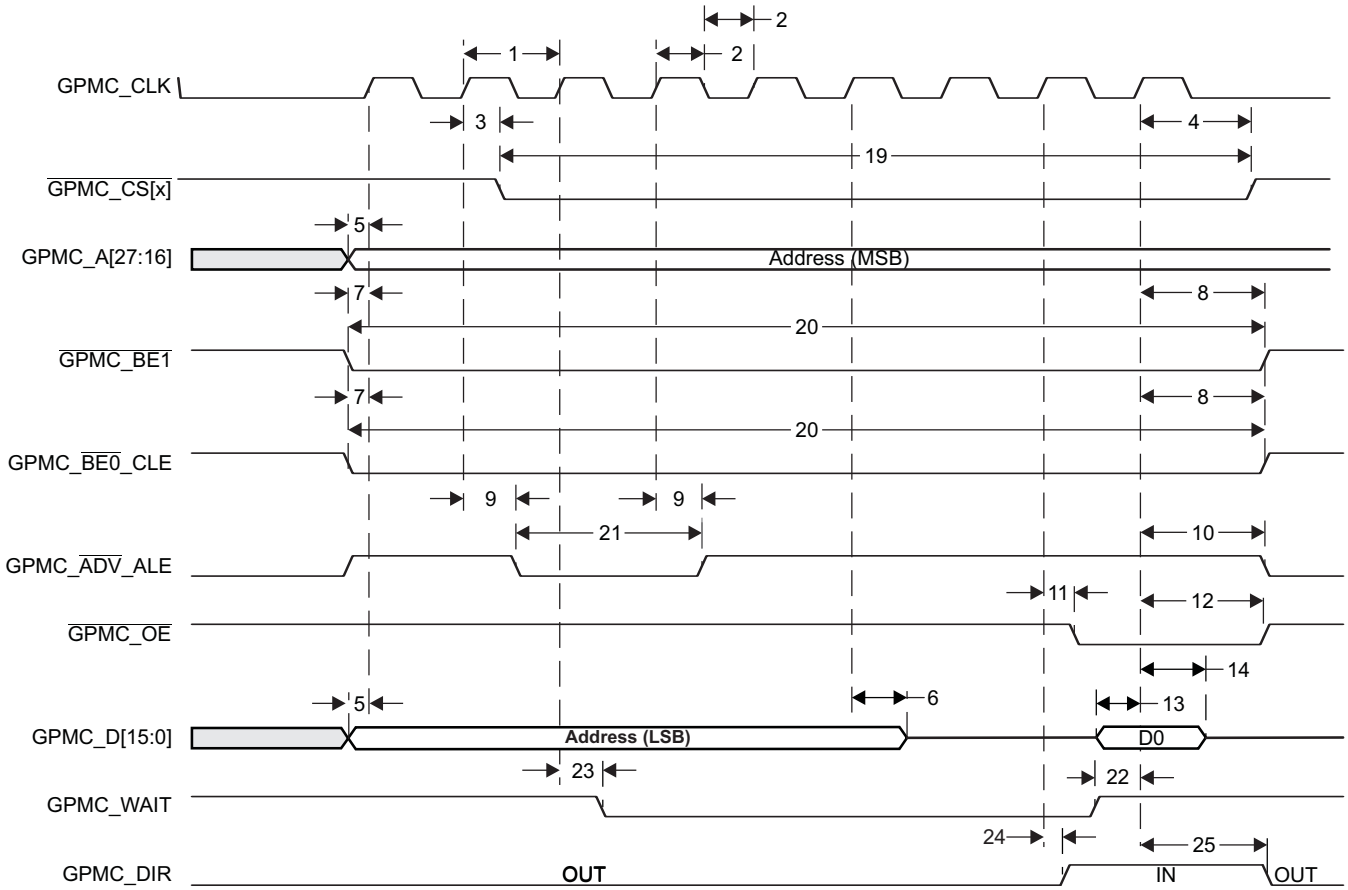

Figure 9-53. GPMC Multiplexed NOR Flash - Synchronous Single Read (GPMCFCLKDIVIDER = 0)

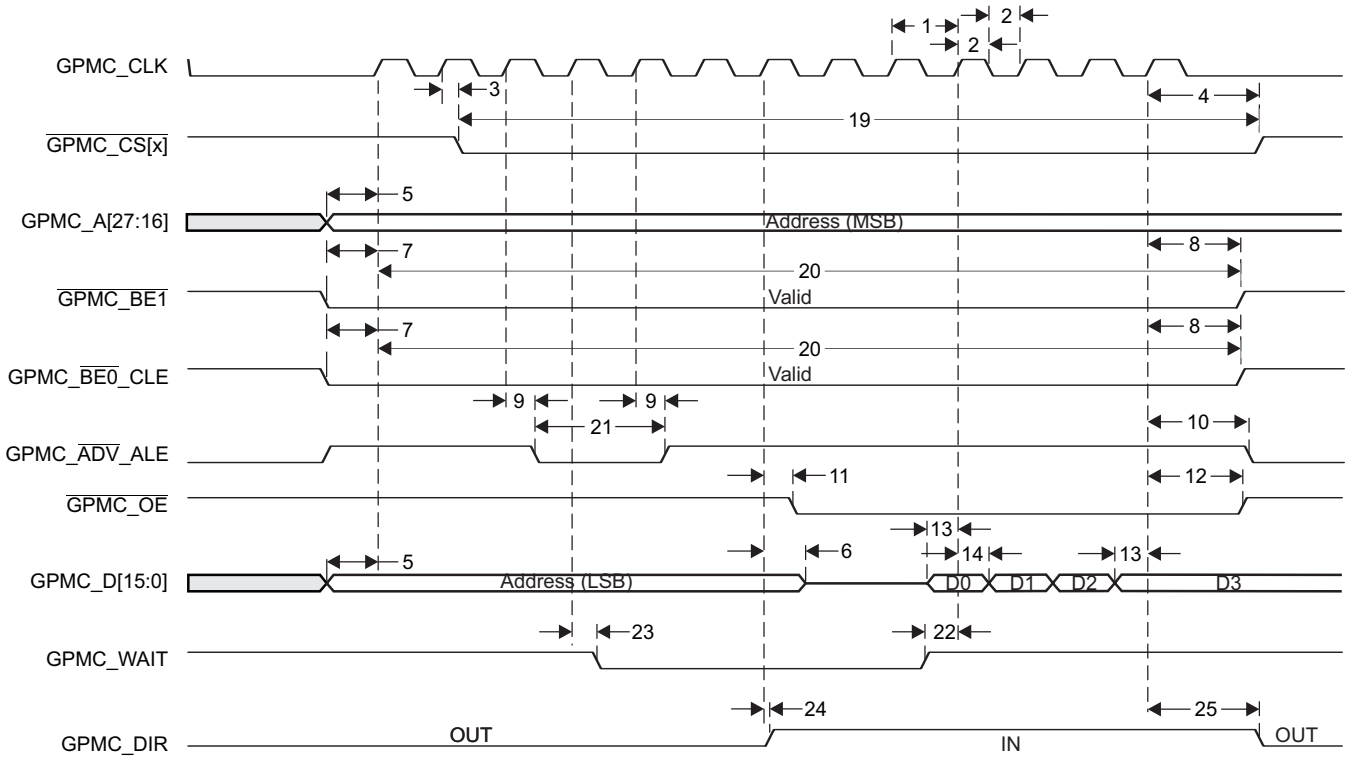

Figure 9-54. GPMC Multiplexed NOR Flash - 4x16-bit Synchronous Burst Read (GPMCFCLKDIVIDER = 0)

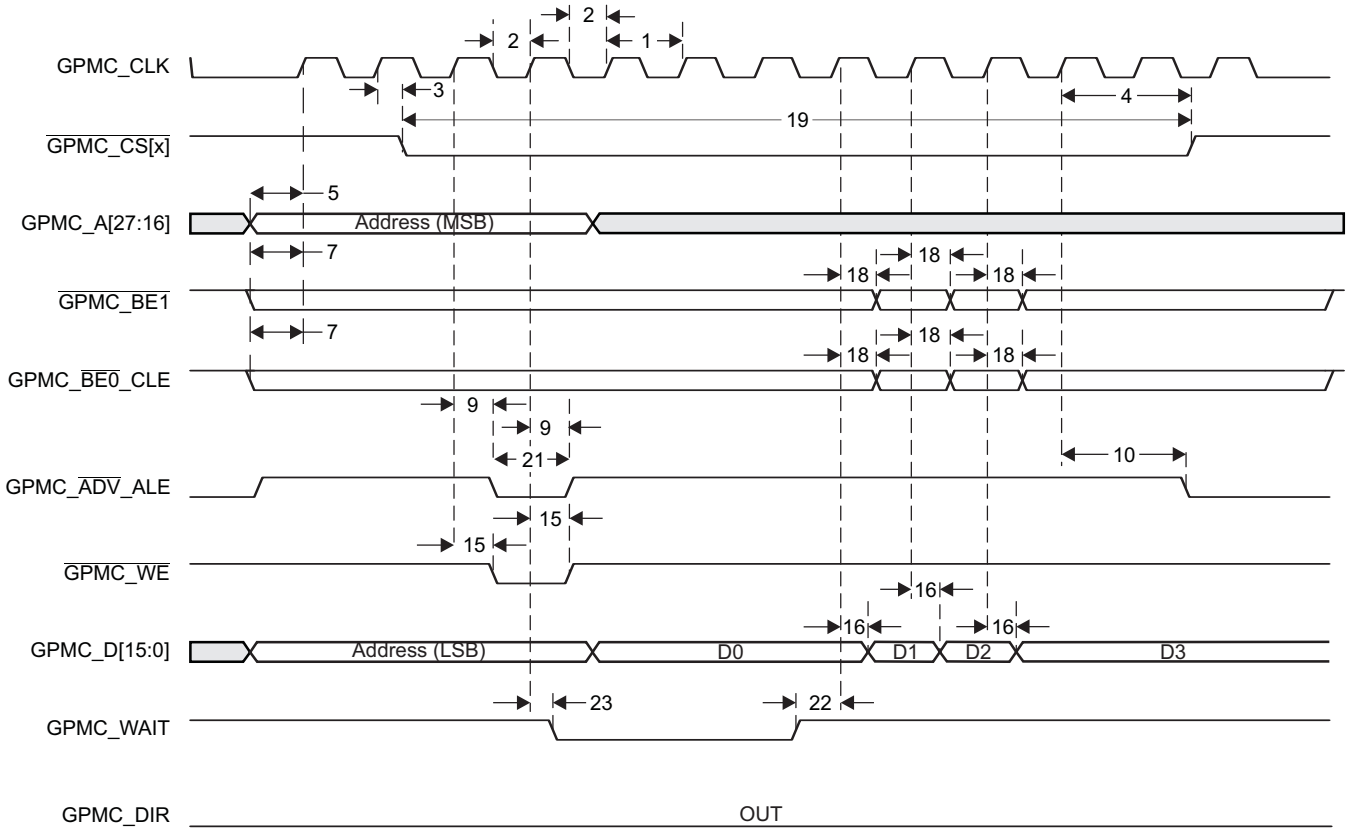

Figure 9-55. GPMC Multiplexed NOR Flash - Synchronous Burst Write (GPMCFCLKDIVIDER = 0)

Copyright © 2010–2015, Texas Instruments Incorporated

9.8.2.2 GPMC and NOR Flash Interface Asynchronous Mode Timing

Table 9-56. GPMC and NOR Flash Interface Asynchronous Mode Timing - Internal Parameters

NO.		MIN	MAX	UNIT
1	Max. output data generation delay from internal functional clock		6.5	ns
2	Max. input data capture delay by internal functional clock		4	ns
3	Max. chip select generation delay from internal functional clock		6.5	ns
4	Max. address generation delay from internal functional clock		6.5	ns
5	Max. address valid generation delay from internal functional clock		6.5	ns
6	Max. byte enable generation delay from internal functional clock		6.5	ns
7	Max. output enable generation delay from internal functional clock		6.5	ns
8	Max. write enable generation delay from internal functional clock		6.5	ns
9	Max. functional clock skew		100	ps

Table 9-57. Timing Requirements for GPMC and NOR Flash Interface - Asynchronous Mode

(see Figure 9-56, Figure 9-57, Figure 9-58, Figure 9-60)

NO.			MIN	MAX	UNIT
6	$t_{acc(DAT)}$	Data maximum access time (GPMC_FCLK cycles)		H(1)	cycles
21	$t_{acc1\text{-}pgmode(DAT)}$	Page mode successive data maximum access time (GPMC_FCLK cycles)		P(2)	cycles
22	$t_{acc2\text{-}pgmode(DAT)}$	Page mode first data maximum access time (GPMC_FCLK cycles)		H(1)	cycles

(1) H = AccessTime * (TimeParaGranularity + 1)
(2) P = PageBurstAccessTime * (TimeParaGranularity + 1).

Table 9-58. Switching Characteristics Over Recommended Operating Conditions for GPMC and NOR Flash Interface - Asynchronous Mode

(see Figure 9-56, Figure 9-57, Figure 9-58, Figure 9-59, Figure 9-60, Figure 9-61)

NO.	PARAMETER		MIN	MAX	UNIT
1	$t_{w(nBEV)}$	Pulse duration, GPMC_$\overline{BE0}$_CLE, $\overline{GPMC_BE1}$ valid time		N(1)	ns
2	$t_{w(nCSV)}$	Pulse duration, $\overline{GPMC_CS[x]}$ low		A(2)	ns
4	$t_{d(nCSV\text{-}nADVIV)}$	Delay time, $\overline{GPMC_CS[x]}$ valid to GPMC_NADV_ALE invalid	B - 0.2(3)	B + 2.0(3)	ns
5	$t_{d(nCSV\text{-}nOEIV)}$	Delay time, $\overline{GPMC_CS[x]}$ valid to $\overline{GPMC_OE_RE}$ invalid (single read)	C - 0.2(4)	C + 2.0(4)	ns
10	$t_{d(AV\text{-}nCSV)}$	Delay time, address bus valid to $\overline{GPMC_CS[x]}$ valid	J - 0.2(5)	J + 2.0(5)	ns
11	$t_{d(nBEV\text{-}nCSV)}$	Delay time, GPMC_$\overline{BE0}$_CLE, $\overline{GPMC_BE1}$ valid to $\overline{GPMC_CS[x]}$ valid	J - 0.2(5)	J + 2.0(5)	ns
13	$t_{d(nCSV\text{-}nADVV)}$	Delay time, $\overline{GPMC_CS[x]}$ valid to GPMC_$\overline{ADV}$_ALE valid	K - 0.2(6)	K + 2.0(6)	ns
14	$t_{d(nCSV\text{-}nOEV)}$	Delay time, $\overline{GPMC_CS[x]}$ valid to $\overline{GPMC_OE_RE}$ valid	L - 0.2(7)	L + 2.0(7)	ns

(1) For single read: N = RdCycleTime * (TimeParaGranularity + 1) * GPMC_FCLK
For single write: N = WrCycleTime * (TimeParaGranularity + 1) * GPMC_FCLK
For burst read: N = (RdCycleTime + (n - 1) * PageBurstAccessTime) * (TimeParaGranularity + 1) * GPMC_FCLK
For burst write: N = (WrCycleTime + (n - 1) * PageBurstAccessTime) * (TimeParaGranularity + 1) * GPMC_FCLK
(2) For single read: A = (CSRdOffTime - CSOnTime) * (TimeParaGranularity + 1) * GPMC_FCLK
For single write: A = (CSWrOffTime - CSOnTime) * (TimeParaGranularity + 1) * GPMC_FCLK
For burst read: A = (CSRdOffTime - CSOnTime + (n - 1) * PageBurstAccessTime) * (TimeParaGranularity + 1) * GPMC_FCLK
For burst write: A = (CSWrOffTime - CSOnTime + (n - 1) * PageBurstAccessTime) * (TimeParaGranularity + 1) * GPMC_FCLK
(3) = B - nCS Max Delay + nADV Min Delay
For reading: B = ((ADVRdOffTime - CSOnTime) * (TimeParaGranularity + 1) + 0.5 * (ADVExtraDelay - CSExtraDelay)) * GPMC_FCLK
For writing: B = ((ADVWrOffTime - CSOnTime) * (TimeParaGranularity + 1) + 0.5 * (ADVExtraDelay - CSExtraDelay)) * GPMC_FCLK
(4) = C - nCS Max Delay + nOE Min Delay
C = ((OEOffTime - CSOnTime) * (TimeParaGranularity + 1) + 0.5 * (OEExtraDelay - CSExtraDelay)) * GPMC_FCLK
(5) = J - Address Max Delay + nCS Min Delay
J = (CSOnTime * (TimeParaGranularity + 1) + 0.5 * CSExtraDelay) * GPMC_FCLK
(6) = K - nCS Max Delay + nADV Min Delay
K = ((ADVOnTime - CSOnTime) * (TimeParaGranularity + 1) + 0.5 * (ADVExtraDelay - CSExtraDelay)) * GPMC_FCLK
(7) = L - nCS Max Delay + nOE Min Delay
L = ((OEOnTime - CSOnTime) * (TimeParaGranularity + 1) + 0.5 * (OEExtraDelay - CSExtraDelay)) * GPMC_FCLK

Copyright © 2010–2015, Texas Instruments Incorporated

Table 9-58. Switching Characteristics Over Recommended Operating Conditions for GPMC and NOR Flash Interface - Asynchronous Mode (continued)

(see Figure 9-56, Figure 9-57, Figure 9-58, Figure 9-59, Figure 9-60, Figure 9-61)

NO.	PARAMETER		MIN	MAX	UNIT
15	$t_{d(nCSV-DIR)}$	Delay time, $\overline{GPMC_CS[x]}$ valid to GPMC_DIR high	L - 0.2 (7)	L + 2.0 (7)	ns
16	$t_{d(nCSV-DIR)}$	Delay time, $\overline{GPMC_CS[x]}$ valid to GPMC_DIR low	M - 0.2 (8)	M + 2.0 (8)	ns
17	$t_{w(AIV)}$	Address invalid duration between 2 successive read or write accesses	G (9)		ns
19	$t_{d(nCSV-nOEIV)}$	Delay time, $\overline{GPMC_CS[x]}$ valid to $\overline{GPMC_OE_RE}$ invalid (burst read)	I - 0.2 (10)	I + 2.0 (10)	ns
21	$t_{w(AV)}$	Pulse duration, address valid: second, third and fourth accesses	D (11)		ns
26	$t_{d(nCSV-nWEV)}$	Delay time, $\overline{GPMC_CS[x]}$ valid to $\overline{GPMC_WE}$ valid	E - 0.2 (12)	E + 2.0 (12)	ns
28	$t_{d(nCSV-nWEIV)}$	Delay time, $\overline{GPMC_CS[x]}$ valid to $\overline{GPMC_WE}$ invalid	F - 0.2 (13)	F + 2.0 (13)	ns
29	$t_{d(nWEV-DV)}$	Delay time, $\overline{GPMC_WE}$ valid to data bus valid		2.0	ns
30	$t_{d(DV-nCSV)}$	Delay time, data bus valid to $\overline{GPMC_CS[x]}$ valid	J - 0.2 (5)	J + 2.0 (5)	ns
38	$t_{d(nOEV-AIV)}$	Delay time, $\overline{GPMC_OE_RE}$ valid to GPMC_A[16:1]_D[15:0] address phase end		2.0	ns

(8) = M - nCS Max Delay + nOE Min Delay
M = ((RdCycleTime - CSOnTime) * (TimeParaGranularity + 1) - 0.5 * CSExtraDelay) * GPMC_FCLK.
Parameter M expression is given as one example of GPMC programming. The IO DIR signal goes from IN to OUT after both RdCycleTime and BusTurnAround completion. Behavior of the IO direction signal depends on the kind of successive read and write accesses performed to the memory and multiplexed or non-multiplexed memory addressing scheme, whether the bus keeping feature is enabled or not. The IO DIR behavior is automatically handled by the GPMC controller.
(9) G = Cycle2CycleDelay * GPMC_FCLK
(10) = I - nCS Max Delay + nOE Min Delay
I = ((OEOffTime + (n - 1) * PageBurstAccessTime - CSOnTime) * (TimeParaGranularity + 1) + 0.5 * (OEExtraDelay - CSExtraDelay)) * GPMC_FCLK
(11) D = PageBurstAccessTime * (TimeParaGranularity + 1) * GPMC_FCLK
(12) = E - nCS Max Delay + nWE Min Delay
E = ((WEOnTime - CSOnTime) * (TimeParaGranularity + 1) + 0.5 * (WEExtraDelay - CSExtraDelay)) * GPMC_FCLK
(13) = F - nCS Max Delay + nWE Min Delay
F = ((WEOffTime - CSOnTime) * (TimeParaGranularity + 1) + 0.5 * (WEExtraDelay - CSExtraDelay)) * GPMC_FCLK

Copyright © 2010–2015, Texas Instruments Incorporated

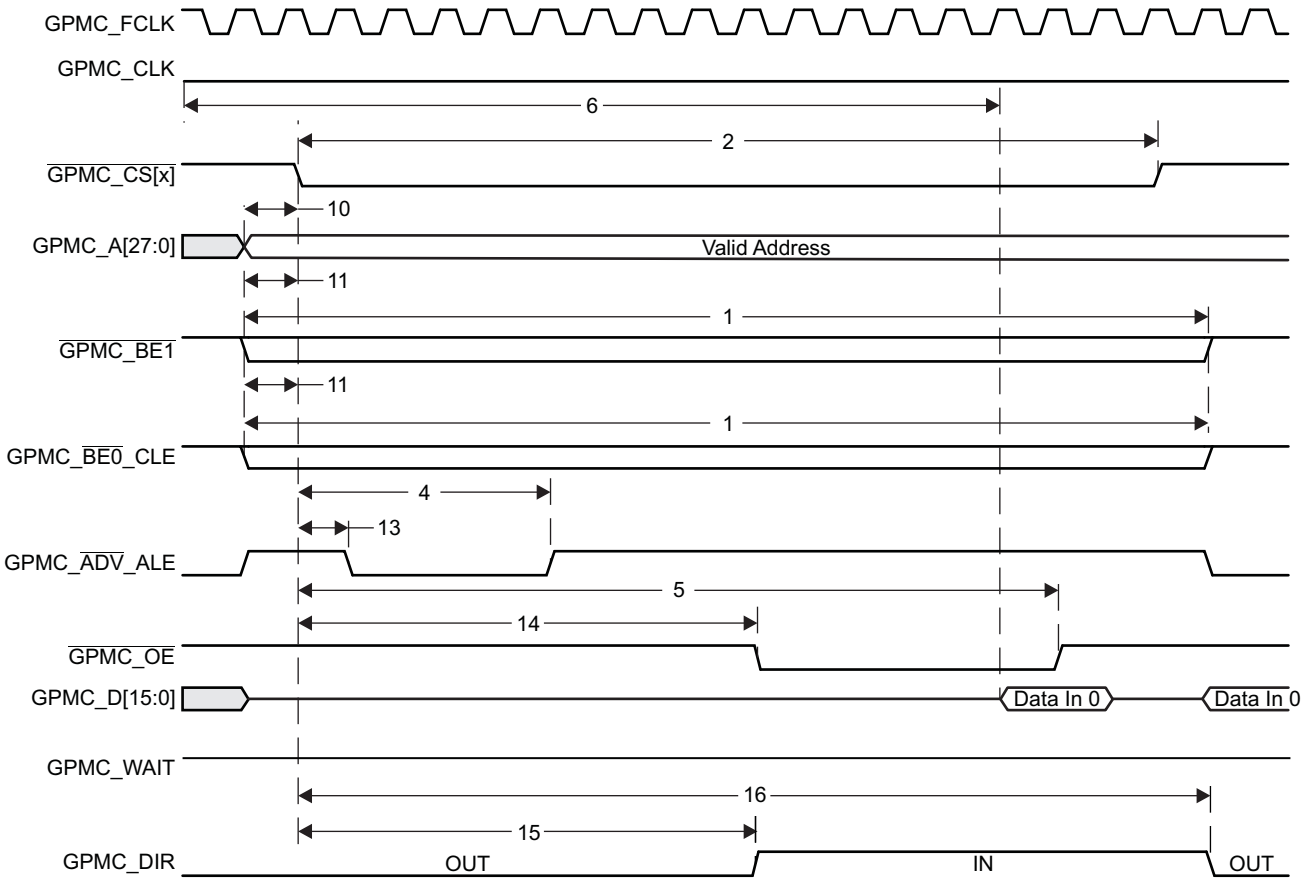

Figure 9-56. GPMC Non-Multiplexed NOR Flash - Asynchronous Read - Single Word Timing

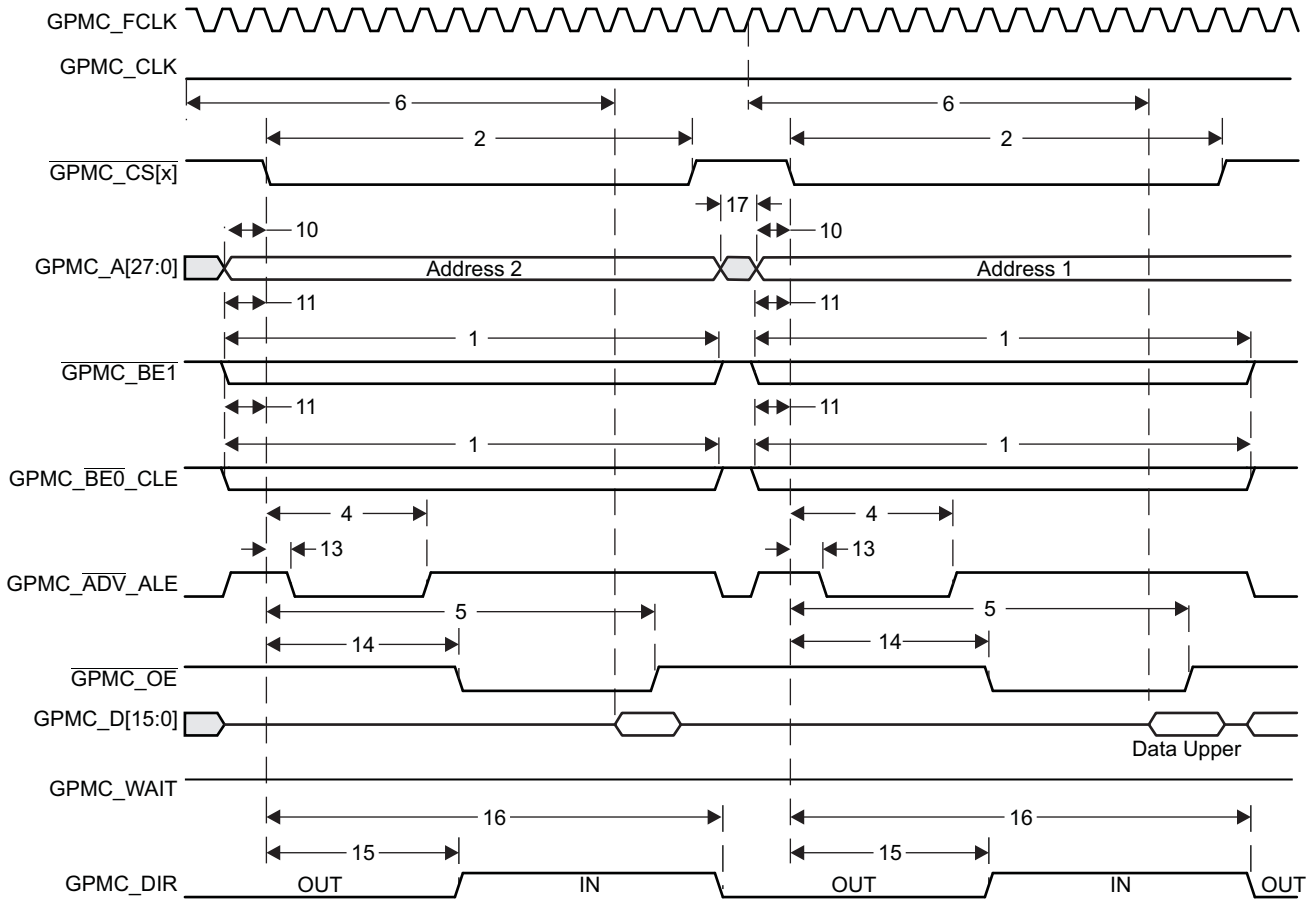

Figure 9-57. GPMC Non-Multiplexed NOR Flash - Asynchronous Read - 32-Bit Timing

Copyright © 2010–2015, Texas Instruments Incorporated

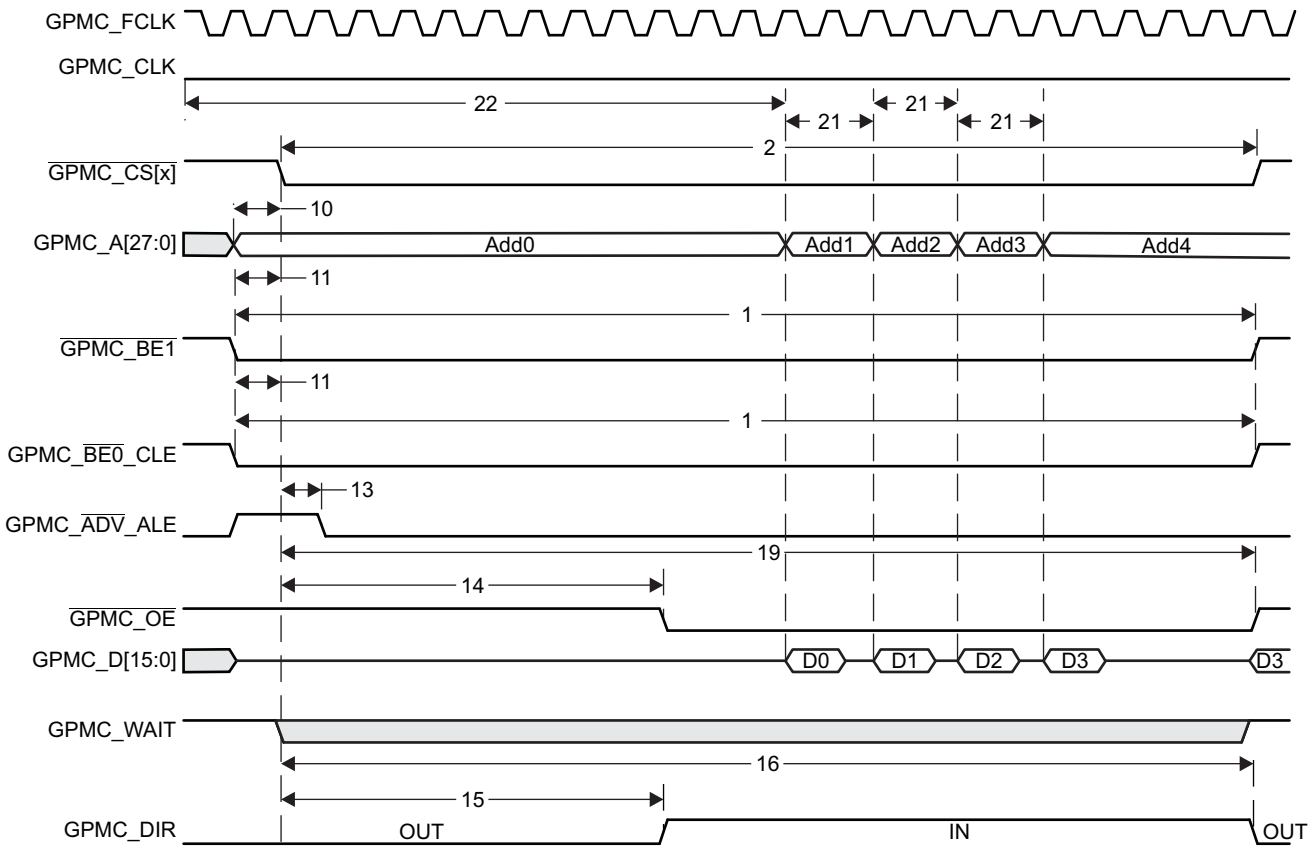

Figure 9-58. GPMC Non-Multiplexed Only NOR Flash - Asynchronous Read - Page Mode 4x16-Bit Timing

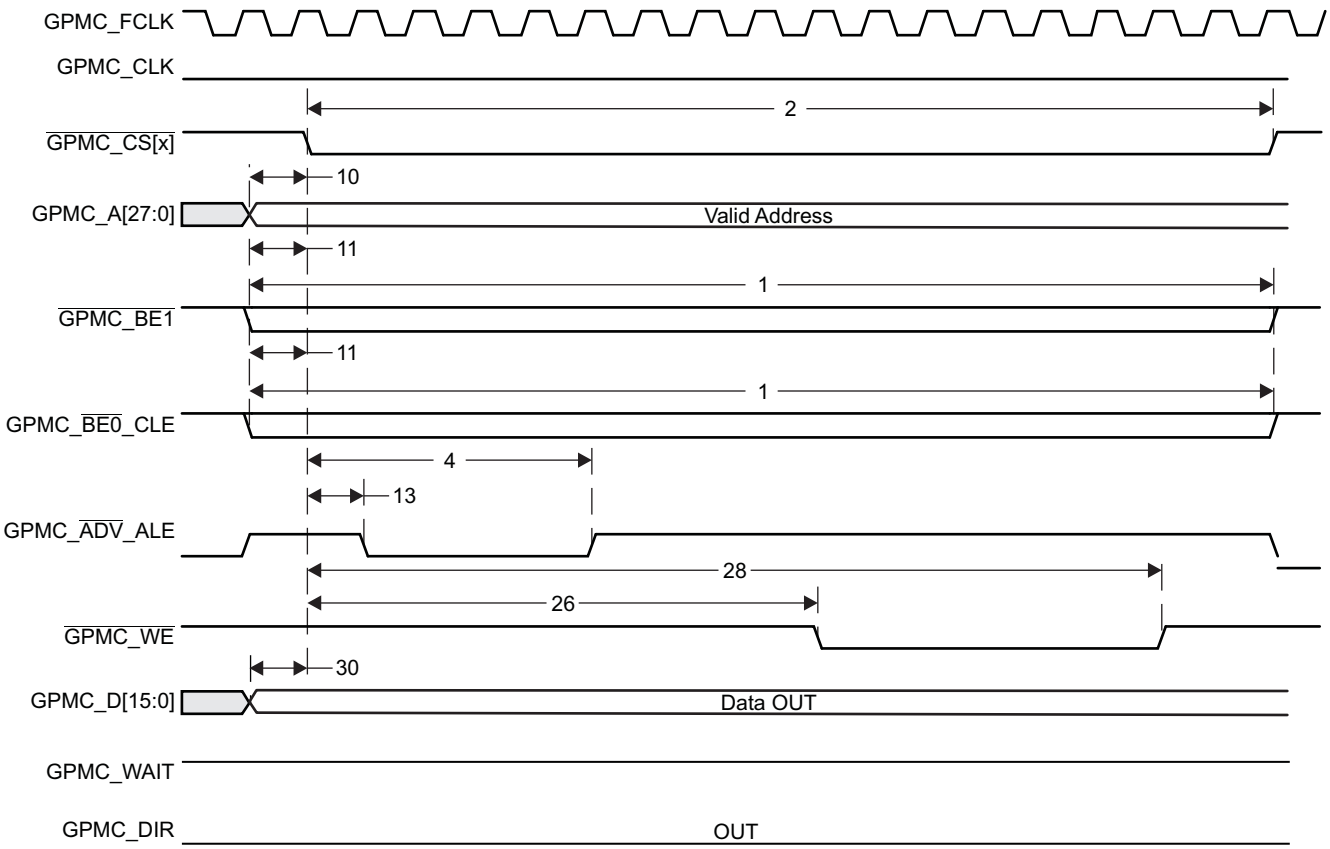

Figure 9-59. GPMC Non-Multiplexed NOR Flash - Asynchronous Write - Single Word Timing

Copyright © 2010–2015, Texas Instruments Incorporated

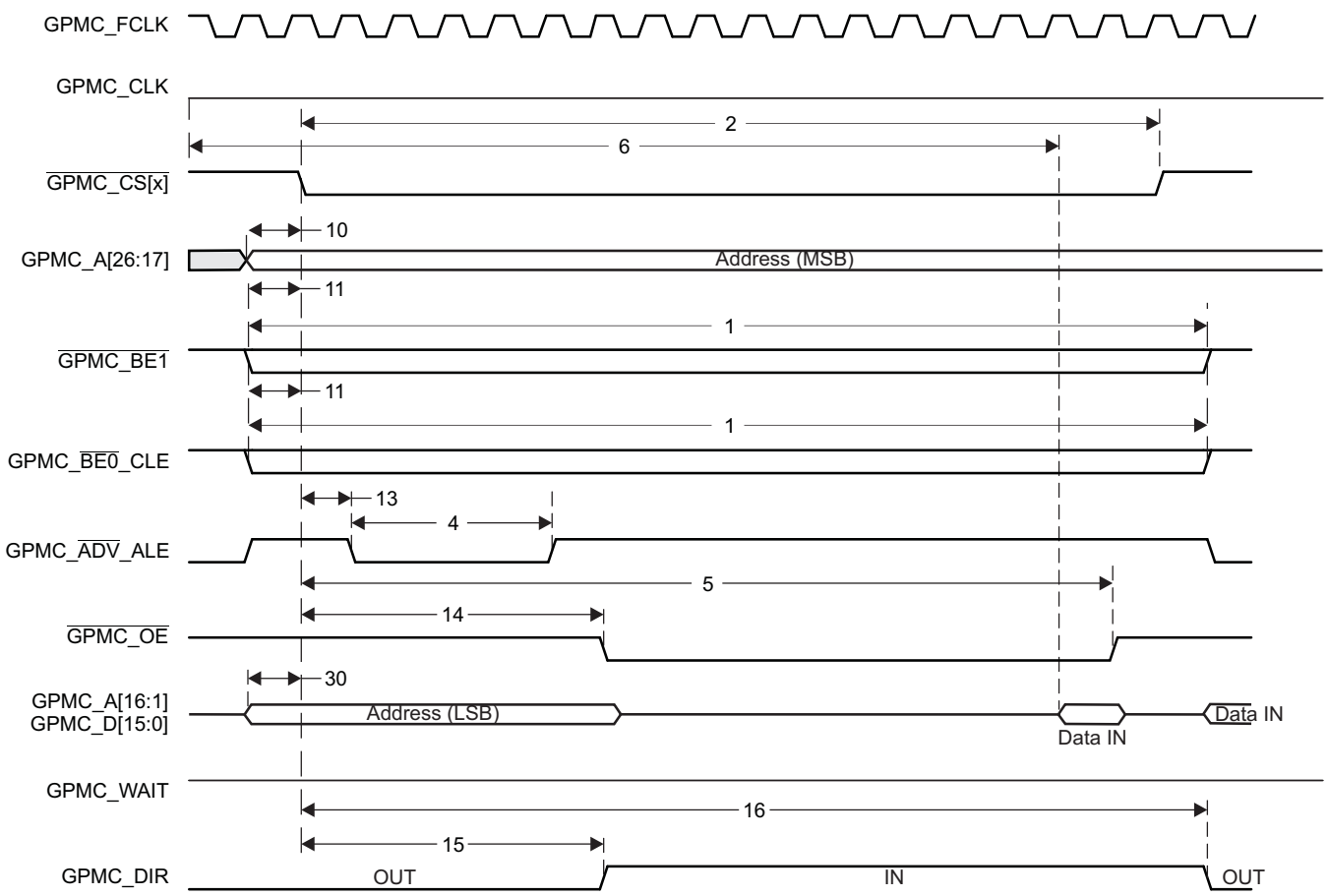

Figure 9-60. GPMC Multiplexed NOR Flash - Asynchronous Read - Single Word Timing

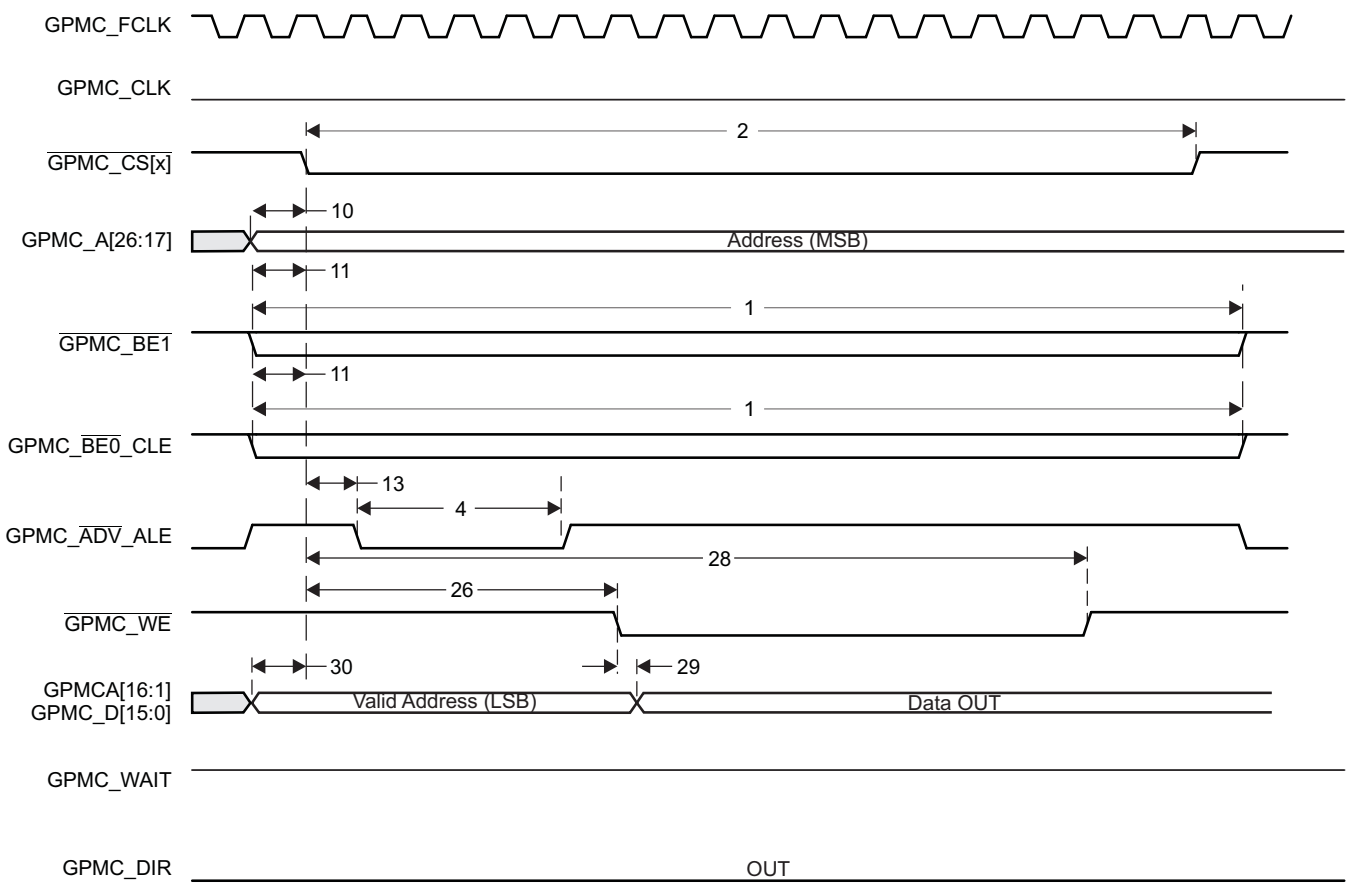

Figure 9-61. GPMC Multiplexed NOR Flash - Asynchronous Write - Single Word Timing

Copyright © 2010–2015, Texas Instruments Incorporated

9.8.2.3 GPMC and NAND Flash Interface Asynchronous Mode Timing

Table 9-59. GPMC and NAND Flash Interface Asynchronous Mode Timing - Internal Parameters

NO.		MIN	MAX	UNIT
1	Max. output data generation delay from internal functional clock		6.5	ns
2	Max. input data capture delay by internal functional clock		4.0	ns
3	Max. chip select generation delay from internal functional clock		6.5	ns
4	Max. address latch enable generation delay from internal functional clock		6.5	ns
5	Max. command latch enable generation delay from internal functional clock		6.5	ns
6	Max. output enable generation delay from internal functional clock		6.5	ns
7	Max. write enable generation delay from internal functional clock		6.5	ns
8	Max. functional clock skew		100.0	ps

Table 9-60. Timing Requirements for GPMC and NAND Flash Interface

(see Figure 9-64)

NO.			MIN	MAX	UNIT
13	$t_{acc(DAT)}$	Data maximum access time (GPMC_FCLK cycles)		J(1)	cycles

(1) J = AccessTime * (TimeParaGranularity + 1)

Table 9-61. Switching Characteristics Over Recommended Operating Conditions for GPMC and NAND Flash Interface

(see Figure 9-62, Figure 9-63, Figure 9-64, Figure 9-65)

NO.		PARAMETER	MIN	MAX	UNIT
1	$t_{w(nWEV)}$	Pulse duration, $\overline{GPMC_WE}$ valid time		A(1)	ns
2	$t_{d(nCSV-nWEV)}$	Delay time, $\overline{GPMC_CS[x]}$ valid to $\overline{GPMC_WE}$ valid	B - 0.2(2)	B + 2.0(2)	ns
3	$t_{d(CLEH-nWEV)}$	Delay time, GPMC_$\overline{BE0}$_CLE high to $\overline{GPMC_WE}$ valid	C - 0.2(3)	C + 2.0(3)	ns
4	$t_{d(nWEV-DV)}$	Delay time, GPMC_D[15:0] valid to $\overline{GPMC_WE}$ valid	D - 0.2(4)	D + 2.0(4)	ns
5	$t_{d(nWEIV-DIV)}$	Delay time, $\overline{GPMC_WE}$ invalid to GPMC_D[15:0] invalid	E - 0.2(5)	E + 2.0(5)	ns
6	$t_{d(nWEIV-CLEIV)}$	Delay time, $\overline{GPMC_WE}$ invalid to GPMC_$\overline{BE0}$_CLE invalid	F - 0.2(6)	F + 2.0(6)	ns
7	$t_{d(nWEIV-nCSIV)}$	Delay time, $\overline{GPMC_WE}$ invalid to $\overline{GPMC_CS[x]}$ invalid	G - 0.2(7)	G + 2.0(7)	ns
8	$t_{d(ALEH-nWEV)}$	Delay time, GPMC_$\overline{ADV}$_ALE High to $\overline{GPMC_WE}$ valid	C - 0.2(3)	C + 2.0(3)	ns
9	$t_{d(nWEIV-ALEIV)}$	Delay time, $\overline{GPMC_WE}$ invalid to GPMC_$\overline{ADV}$_ALE invalid	F - 0.2(6)	F + 2.0(6)	ns
10	$t_{c(nWE)}$	Cycle time, write cycle time		H(8)	ns
11	$t_{d(nCSV-nOEV)}$	Delay time, $\overline{GPMC_CS[x]}$ valid to $\overline{GPMC_OE_RE}$ valid	I - 0.2(9)	I + 2.0(9)	ns
12	$t_{w(nOEV)}$	Pulse duration, $\overline{GPMC_OE_RE}$ valid time		K(10)	ns
13	$t_{c(nOE)}$	Cycle time, read cycle time		L(11)	ns

(1) A = (WEOffTime - WEOnTime) * (TimeParaGranularity + 1) * GPMC_FCLK
(2) = B + nWE Min Delay - nCS Max Delay
B = ((WEOnTime - CSOnTime) * (TimeParaGranularity + 1) + 0.5 * (WEExtraDelay - CSExtraDelay)) * GPMC_FCLK
(3) = C + nWE Min Delay - CLE Max Delay
C = ((WEOnTime - ADVOnTime) * (TimeParaGranularity + 1) + 0.5 * (WEExtraDelay - ADVExtraDelay)) * GPMC_FCLK
(4) = D + nWE Min Delay - Data Max Delay
D = (WEOnTime * (TimeParaGranularity + 1) + 0.5 * WEExtraDelay) * GPMC_FCLK
(5) =E + Data Min Delay - nWE Max Delay
E = ((WrCycleTime - WEOffTime) * (TimeParaGranularity + 1) - 0.5 * WEExtraDelay) * GPMC_FCLK
(6) = F + CLE Min Delay - nWE Max Delay
F = ((ADVWrOffTime - WEOffTime) * (TimeParaGranularity + 1) + 0.5 * (ADVExtraDelay - WEExtraDelay)) * GPMC_FCLK
(7) =G + nCS Min Delay - nWE Max Delay
G = ((CSWrOffTime - WEOffTime) * (TimeParaGranularity + 1) + 0.5 * (CSExtraDelay - WEExtraDelay)) * GPMC_FCLK
(8) H = WrCycleTime * (1 + TimeParaGranularity) * GPMC_FCLK
(9) = I + nOE Min Delay - nCS Max Delay
I = ((OEOnTime - CSOnTime) * (TimeParaGranularity + 1) + 0.5 * (OEExtraDelay - CSExtraDelay)) * GPMC_FCLK
(10) K = (OEOffTime - OEOnTime) * (1 + TimeParaGranularity) * GPMC_FCLK
(11) L = RdCycleTime * (1 + TimeParaGranularity) * GPMC_FCLK

Copyright © 2010–2015, Texas Instruments Incorporated

Table 9-61. Switching Characteristics Over Recommended Operating Conditions for GPMC and NAND Flash Interface (continued)

(see Figure 9-62, Figure 9-63, Figure 9-64, Figure 9-65)

NO.	PARAMETER		MIN	MAX	UNIT
14	$t_{d(nOEIV-nCSIV)}$	Delay time, $\overline{GPMC_OE_RE}$ invalid to $\overline{GPMC_CS[x]}$ invalid	M - 0.2 (12)	M + 2.0 (12)	ns

(12) =M + nCS Min Delay - nOE Max Delay
M = ((CSRdOffTime - OEOffTime) * (TimeParaGranularity + 1) + 0.5 * (CSExtraDelay - OEExtraDelay))* GPMC_FCLK

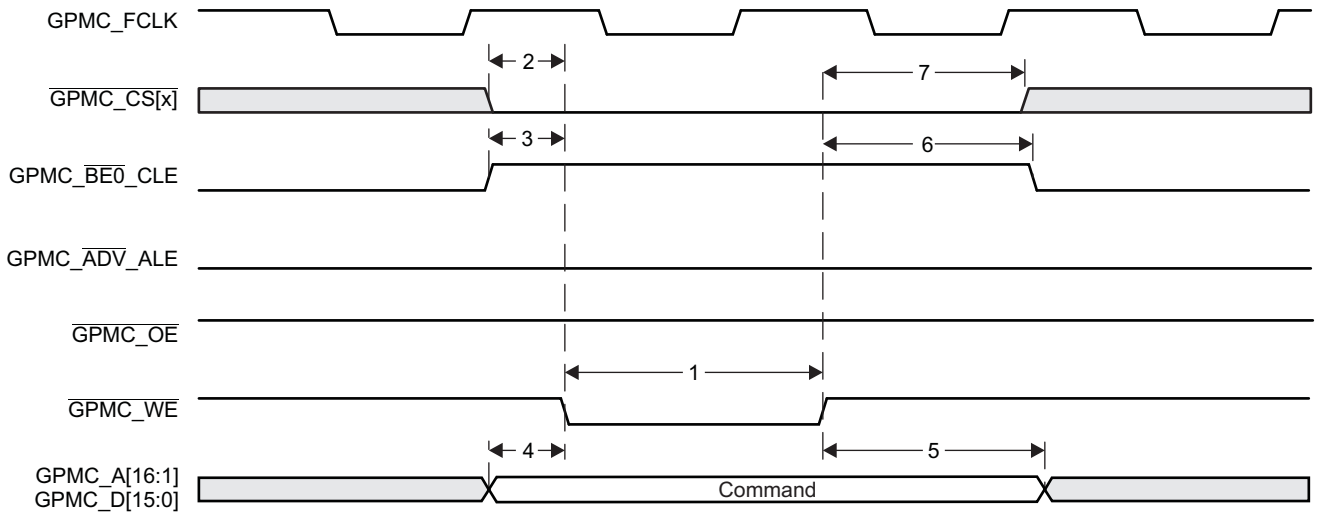

Figure 9-62. GPMC and NAND Flash - Command Latch Cycle Timing

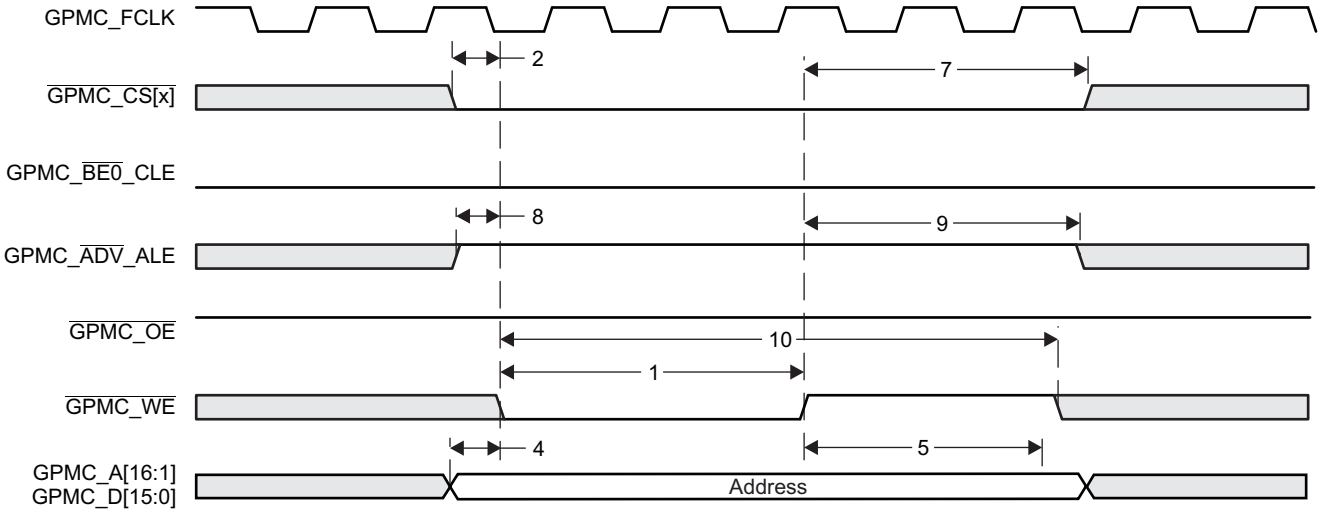

Figure 9-63. GPMC and NAND Flash - Address Latch Cycle Timing

Copyright © 2010–2015, Texas Instruments Incorporated

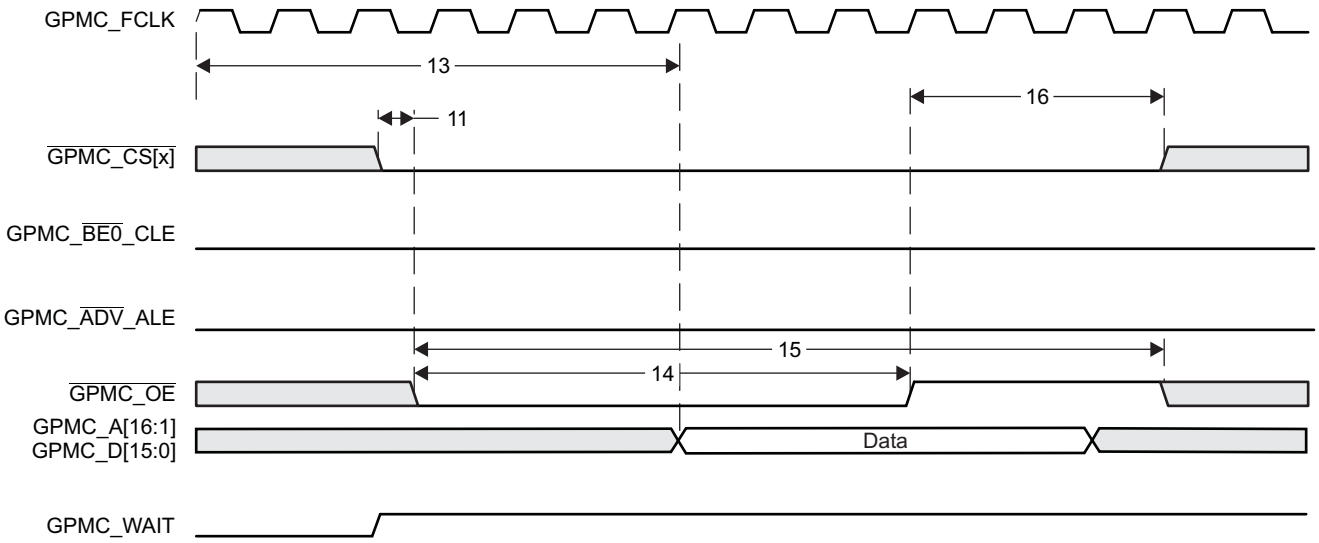

Figure 9-64. GPMC and NAND Flash - Data Read Cycle Timing

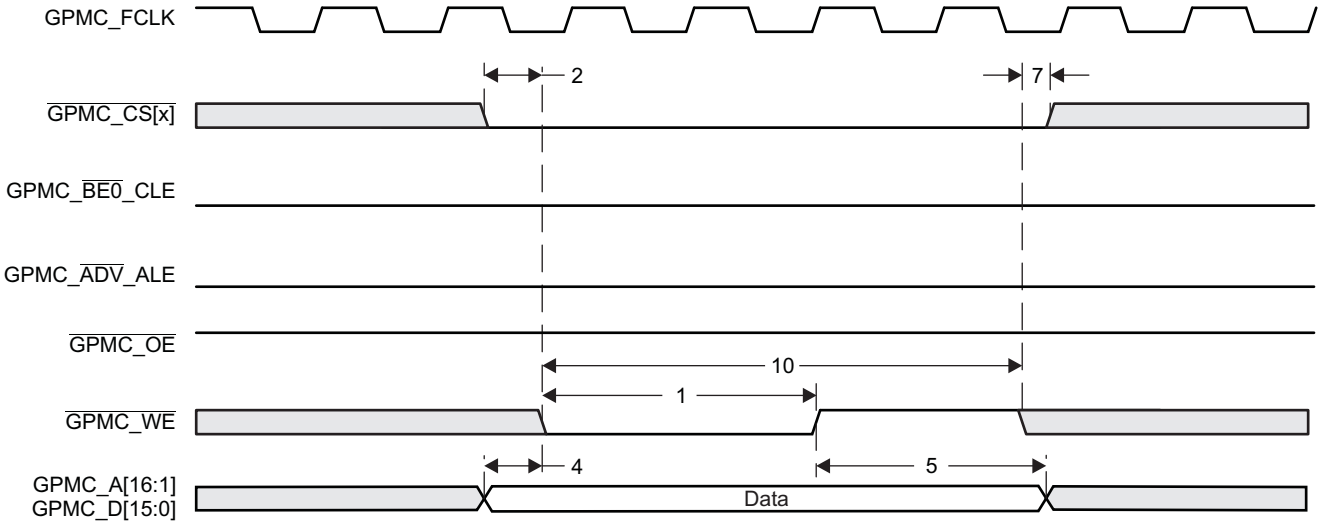

Figure 9-65. GPMC and NAND Flash - Data Write Cycle Timing

9.9 High-Definition Multimedia Interface (HDMI)

The device includes an HDMI 1.3a-compliant transmitter for digital video and audio data to display devices. The HDMI interface consists of a digital HDMI transmitter core with TMDS encoder, a core wrapper with interface logic and control registers, and a transmit PHY, with the following features:

- Hot-plug detection
- Consumer electronics control (CEC) messages
- DVI 1.0 compliant (only RGB pixel format)
- CEA 861-D and VESA DMT formats
- Supports up to 165-MHz pixel clock:
  - 1920 x 1080p @75 Hz with 8-bit component color depth
  - 1920 x 1200 @60 Hz with 8-bit component color depth
  - 1600 x 1200 @60 Hz with 8-bit component color depth
- Support for deep-color mode:
  - 10-bit component color depth up to 1080p @60 Hz (maximum pixel clock = 148.5 MHz)
  - 12-bit component color depth at 720p or 1080i @60 Hz (maximum pixel clock = 123.75 MHz)
- Uncompressed multichannel (up to eight channels) audio (L-PCM) support
- Master I2C interface for display data channel (DDC) connection
- TMDS clock to the HDMI-PHY is up to 185.625 MHz
- Maximum supported pixel clock:
  - 165 MHz for 8-bit color depth
  - 148.5 MHz for 10-bit color depth
  - 123.75 MHz for 12-bit color depth
- Options available to support HDCP encryption engine for transmitting protected audio and video (contact local TI sales representative for information).

For more details on the HDMI, see the HDMI chapter in the *AM389x Sitara ARM Processors Technical Reference Manual* (literature number SPRUGX7).

9.9.1 HDMI Interface Design Specifications

NOTE

For more information on PCB layout, see the *DM816xx Easy CYG Package PCB Escape Routing* application report (literature number SPRABK6).

This section provides PCB design and layout specifications for the HDMI interface. The design rules constrain PCB trace length, PCB trace skew, signal integrity, cross-talk, and signal timing. Simulation and system design work has been done to ensure the HDMI interface requirements are met.

9.9.1.1 HDMI Interface Schematic

The HDMI bus is separated into three main sections:

1. Transition Minimized Differential Signaling (TMDS) high-speed digital video interface
2. Display Data Channel (I2C bus for configuration and status exchange between two devices)
3. Consumer Electronics Control (optional) for remote control of connected devices.

The DDC and CEC are low-speed interfaces, so nothing special is required for PCB layout of these signals. Their connection is shown in Figure 9-66.

The TMDS channels are high-speed differential pairs and, therefore, require the most care in layout. Specifications for TMDS layout are below.

Copyright © 2010–2015, Texas Instruments Incorporated

Figure 9-66 shows the HDMI interface schematic. The specific pin numbers can be obtained from Table 4-7, *HDMI Terminal Functions*.

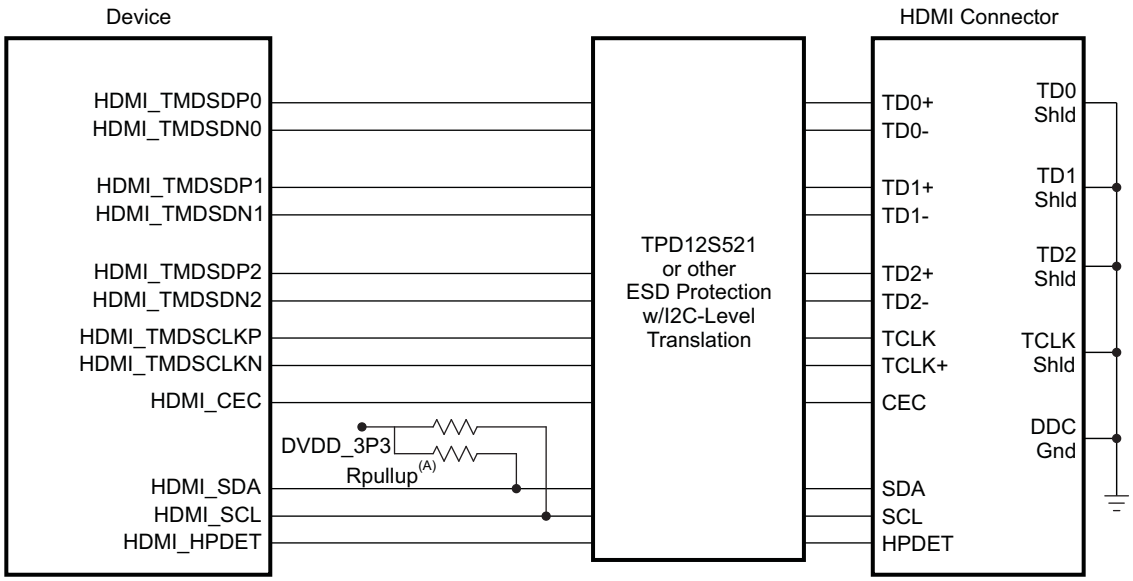

A. 5K-10K Ω pullup resistors are required if not integrated in the ESD protection chip.

Figure 9-66. HDMI Interface High-Level Schematic

9.9.1.2 TMDS Routing

The TMDS signals are high-speed differential pairs. Care must be taken in the PCB layout of these signals to ensure good signal integrity.

The TMDS differential signal traces must be routed to achieve 100 Ω (±10%) differential impedance and 60 Ω (±10%) single-ended impedance. Single-ended impedance control is required because differential signals are extremely difficult to closely couple on PCBs and, therefore, single-ended impedance becomes important.

These impedances are impacted by trace width, trace spacing, distance to reference planes, and dielectric material. Verify with a PCB design tool that the trace geometry for both data signal pairs results in as close to 60 Ω impedance traces as possible. For best accuracy, work with your PCB fabricator to ensure this impedance is met.

In general, closely coupled differential signal traces are not an advantage on PCBs. When differential signals are closely coupled, tight spacing and width control is necessary. Very small width and spacing variations affect impedance dramatically, so tight impedance control can be more problematic to maintain in production.

Loosely coupled PCB differential signals make impedance control much easier. Wider traces and spacing make obstacle avoidance easier, and trace width variations do not affect impedance as much; therefore, it is easier to maintain an accurate impedance over the length of the signal. The wider traces also show reduced skin effect and, therefore, often result in better signal integrity.

Table 9-62 shows the routing specifications for the TMDS signals.

Table 9-62. TMDS Routing Specifications

PARAMETER	MIN	TYP	MAX	UNIT
Processor-to-HDMI header trace length			7000	Mils
Number of stubs allowed on TMDS traces			0	Stubs
TX and RX pair differential impedance	90	100	110	Ω
TX and RX single-ended impedance	54	60	66	Ω
Number of vias on each TMDS trace			2	Vias (1)
TMDS differential pair to any other trace spacing	2*DS (2)			

(1) Vias must be used in pairs with their distance minimized.
(2) DS = differential spacing of the HDMI traces.

9.9.1.3 DDC Signals

As shown in Figure 9-66, the DDC connects just like a standard I2C bus. As such, resistor pullups must be used to pull up the open drain buffer signals unless they are integrated into the ESD protection chip used. If used, these pullup resistors should be connected to a 3.3-V supply.

9.9.1.4 HDMI ESD Protection Device (Required)

Interfaces that connect to a cable such as HDMI generally require more ESD protection than can be built into the processor's outputs. Therefore, this HDMI interface requires the use of an ESD protection chip to provide adequate ESD protection and to translate I2C voltage levels from the 3.3 V supplied by the device to the 5 volts required by the HDMI specification.

When selecting an ESD protection chip, choose the lowest capacitance ESD protection available to minimize signal degradation. In no case should the ESD protection circuit capacitance be more than 5 pF.

TI manufactures devices that provide ESD protection for HDMI signals such as the TPD12S521. For more information see the www.ti.com website.

9.9.1.5 PCB Stackup Specifications

Table 9-63 shows the stackup and feature sizes required for HDMI.

Table 9-63. HDMI PCB Stackup Specifications

PARAMETER	MIN	TYP	MAX	UNIT
PCB routing and plane layers	4	6	-	Layers
Signal routing layers	2	3	-	Layers
Number of ground plane cuts allowed within HDMI routing region	-	-	0	Cuts
Number of layers between HDMI routing region and reference ground plane	-	-	0	Layers
PCB trace width	-	4	-	Mils
PCB BGA escape via pad size	-	20	-	Mils
PCB BGA escape via hole size	-	10		Mils
Processor device BGA pad size (1) (2)		0.3		mm

(1) Non-solder mask defined pad.
(2) Per IPC-7351A BGA pad size guideline.

Copyright © 2010–2015, Texas Instruments Incorporated

9.9.1.6 Grounding

Each TMDS channel has its own shield pin which should be grounded to provide a return current path for the TMDS signal.

9.9.2 HDMI Peripheral Register Descriptions

Table 9-64. HDMI Wrapper Registers

HEX ADDRESS	ACRONYM	REGISTER NAME
0x46C0 0000	HDMI_WP_REVISION	IP Revision Identifier
0x46C0 0010	HDMI_WP_SYSCONFIG	Clock Management Configuration
0x46C0 0024	HDMI_WP_IRQSTATUS_RAW	Raw Interrupt Status
0x46C0 0028	HDMI_WP_IRQSTATUS	Interrupt Status
0x46C0 002C	HDMI_WP_IRQENABLE_SET	Interrupt Enable
0x46C0 0030	HDMI_WP_IRQENABLE_CLR	Interrupt Disable
0x46C0 0034	HDMI_WP_IRQWAKEEN	IRQ Wakeup
0x46C0 0050	HDMI_WP_VIDEO_CFG	Configuration of HDMI Wrapper Video
0x46C0 0070	HDMI_WP_CLK	Configuration of Clocks
0x46C0 0080	HDMI_WP_AUDIO_CFG	Audio Configuration in FIFO
0x46C0 0084	HDMI_WP_AUDIO_CFG2	Audio Configuration of DMA
0x46C0 0088	HDMI_WP_AUDIO_CTRL	Audio FIFO Control
0x46C0 008C	HDMI_WP_AUDIO_DATA	TX Data of FIFO

Table 9-65. HDMI Core System Registers

HEX ADDRESS	ACRONYM	REGISTER NAME
0x46C0 0400	VND_IDL	Vendor ID
0x46C0 0404	VND_IDH	Vendor ID
0x46C0 0408	DEV_IDL	Device ID
0x46C0 040C	DEV_IDH	Device ID
0x46C0 0410	DEV_REV	Device Revision
0x46C0 0414	SRST	Software Reset
0x46C0 0420	SYS_CTRL1	System Control 1
0x46C0 0424	SYS_STAT	System Status
0x46C0 0428	SYS_CTRL3	Legacy
0x46C0 0434	DCTL	Data Control
0x46C0 043C - 0x46C0 0494	-	Reserved
0x46C0 0498	RI_STAT	Ri Status
0x46C0 049C	RI_CMD	Ri Command
0x46C0 04A0	RI_START	Ri Line Start
0x46C0 04A4	RI_RX_L	Ri From RX
0x46C0 04A8	RI_RX_H	Ri From RX
0x46C0 04AC	RI_DEBUG	Ri Debug
0x46C0 04C8	DE_DLY	VIDEO DE Delay
0x46C0 04C8	DE_DLY	VIDEO DE Delay
0x46C0 04CC	DE_CTRL	VIDEO DE Control
0x46C0 04D0	DE_TOP	VIDEO DE Top
0x46C0 04D8	DE_CNTL	VIDEO DE Count
0x46C0 04DC	DE_CNTH	VIDEO DE Count
0x46C0 04E0	DE_LINL	VIDEO DE Line
0x46C0 04E4	DE_LINH_1	VIDEO DE Line

Copyright © 2010–2015, Texas Instruments Incorporated

Table 9-65. HDMI Core System Registers (continued)

HEX ADDRESS	ACRONYM	REGISTER NAME
0x46C0 04E8	HRES_L	Video H Resolution
0x46C0 04EC	HRES_H	Video H Resolution
0x46C0 04F0	VRES_L	Video V Resolution
0x46C0 04F4	VRES_H	Video V Resolution
0x46C0 04F8	IADJUST	Video Interlace Adjustment
0x46C0 04FC	POL_DETECT	Video SYNC Polarity Detection
0x46C0 0500	HBIT_2HSYNC1	Video Hbit to HSYNC
0x46C0 0504	HBIT_2HSYNC2	Video Hbit to HSYNC
0x46C0 0508	FLD2_HS_OFSTL	Video Field2 HSYNC Offset
0x46C0 050C	FLD2_HS_OFSTH	Video Field2 HSYNC Offset
0x46C0 0510	HWIDTH1	Video HSYNC Length
0x46C0 0514	HWIDTH2	Video HSYNC Length
0x46C0 0518	VBIT_TO_VSYNC	Video Vbit to VSYNC
0x46C0 051C	VWIDTH	Video VSYNC Length
0x46C0 0520	VID_CTRL	Video Control
0x46C0 0524	VID_ACEN	Video Action Enable
0x46C0 0528	VID_MODE	Video Mode1
0x46C0 052C	VID_BLANK1	Video Blanking
0x46C0 0530	VID_BLANK2	Video Blanking
0x46C0 0534	VID_BLANK3	Video Blanking
0x46C0 0538	DC_HEADER	Deep Color Header
0x46C0 053C	VID_DITHER	Video Mode2
0x46C0 0540	RGB2XVYCC_CT	RGB_2_xvYCC control
0x46C0 0544	R2Y_COEFF_LOW	RGB_2_xvYCC Conversion R_2_Y
0x46C0 0548	R2Y_COEFF_UP	RGB_2_xvYCC Conversion R_2_Y
0x46C0 054C	G2Y_COEFF_LOW	RGB_2_xvYCC Conversion G_2_Y
0x46C0 0550	G2Y_COEFF_UP	RGB_2_xvYCC Conversion G_2_Y
0x46C0 0554	B2Y_COEFF_LOW	RGB_2_xvYCC Conversion B_2_Y
0x46C0 0558	B2Y_COEFF_UP	RGB_2_xvYCC Conversion B_2_Y
0x46C0 055C	R2CB_COEFF_LOW	RGB_2_xvYCC Conversion R_2_Cb
0x46C0 0560	R2CB_COEFF_UP	RGB_2_xvYCC Conversion R_2_Cb
0x46C0 0564	G2CB_COEFF_LOW	RGB_2_xvYCC Conversion G_2_Cb
0x46C0 0568	G2CB_COEFF_UP	RGB_2_xvYCC Conversion G_2_Cb
0x46C0 056C	B2CB_COEFF_LOW	RGB_2_xvYCC Conversion B_2_Cb
0x46C0 0570	B2CB_COEFF_UP	RGB_2_xvYCC Conversion B_2_Cb
0x46C0 0574	R2CR_COEFF_LOW	RGB_2_xvYCC Conversion R_2_Cr
0x46C0 0578	R2CR_COEFF_UP	RGB_2_xvYCC Conversion R_2_Cr
0x46C0 057C	G2CR_COEFF_LOW	RGB_2_xvYCC Conversion G_2_Cr
0x46C0 0580	G2CR_COEFF_UP	RGB_2_xvYCC Conversion G_2_Cr
0x46C0 0584	B2CR_COEFF_LOW	RGB_2_xvYCC Conversion B_2_Cr
0x46C0 0588	B2CR_COEFF_UP	RGB_2_xvYCC Conversion B_2_Cr
0x46C0 058C	RGB_OFFSET_LOW	RGB_2_xvYCC RGB Input Offset
0x46C0 0590	RGB_OFFSET_UP	RGB_2_xvYCC RGB Input Offset
0x46C0 0594	Y_OFFSET_LOW	RGB_2_xvYCC Conversion Y Output Offset
0x46C0 0598	Y_OFFSET_UP	RGB_2_xvYCC Conversion Y Output Offset
0x46C0 059C	CBCR_OFFSET_LOW	RGB_2_xvYCC Conversion CbCr Output Offset
0x46C0 05A0	CBCR_OFFSET_UP	RGB_2_xvYCC Conversion CbCr Output Offset

Copyright © 2010–2015, Texas Instruments Incorporated

Table 9-65. HDMI Core System Registers (continued)

HEX ADDRESS	ACRONYM	REGISTER NAME
0x46C0 05C0	INTR_STATE	Interrupt State
0x46C0 05C4	INTR1	Interrupt Source
0x46C0 05C8	INTR2	Interrupt Source
0x46C0 05CC	INTR3	Interrupt Source
0x46C0 05D0	INTR4	Interrupt Source
0x46C0 05D4	INT_UNMASK1	Interrupt Unmask
0x46C0 05D8	INT_UNMASK2	Interrupt Unmask
0x46C0 05DC	INT_UNMASK3	Interrupt Unmask
0x46C0 05E0	INT_UNMASK4	Interrupt Unmask
0x46C0 05E4	INT_CTRL	Interrupt Control
0x46C0 0640	XVYCC2RGB_CTL	xvYCC_2_RGB Control
0x46C0 0644	Y2R_COEFF_LOW	xvYCC_2_RGB Conversion Y_2_R
0x46C0 0648	Y2R_COEFF_UP	xvYCC_2_RGB Conversion Y_2_R
0x46C0 064C	CR2R_COEFF_LOW	xvYCC_2_RGB Conversion Cr_2_R
0x46C0 0650	CR2R_COEFF_UP	xvYCC_2_RGB Conversion Cr_2_R
0x46C0 0654	CB2B_COEFF_LOW	xvYCC_2_RGB Conversion Cb_2_B
0x46C0 0658	CB2B_COEFF_UP	xvYCC_2_RGB Conversion Cb_2_B
0x46C0 065C	CR2G_COEFF_LOW	xvYCC_2_RGB Conversion Cr_2_G
0x46C0 0660	CR2G_COEFF_UP	xvYCC_2_RGB Conversion Cr_2_G
0x46C0 0664	CB2G_COEFF_LOW	xvYCC_2_RGB Conversion Cb_2_G
0x46C0 0668	CB2G_COEFF_UP	xvYCC_2_RGB Conversion Cb_2_G
0x46C0 066C	YOFFSET1_LOW	xvYCC_2_RGB Conversion Y Offset
0x46C0 0670	YOFFSET1_UP	xvYCC_2_RGB Conversion Y Offset
0x46C0 0674	OFFSET1_LOW	xvYCC_2_RGB Conversion Offset1
0x46C0 0678	OFFSET1_MID	xvYCC_2_RGB Conversion Offset1
0x46C0 067C	OFFSET1_UP	xvYCC_2_RGB Conversion Offset1
0x46C0 0680	OFFSET2_LOW	xvYCC_2_RGB Conversion Offset2
0x46C0 0684	OFFSET2_UP	xvYCC_2_RGB Conversion Offset2
0x46C0 0688	DCLEVEL_LOW	xvYCC_2_RGB Conversion DC Level
0x46C0 068C	DCLEVEL_UP	xvYCC_2_RGB Conversion DC Level
0x46C0 07B0	DDC_MAN	DDC I2C Manual
0x46C0 07B4	DDC_ADDR	DDC I2C Target Slave Address
0x46C0 07B8	DDC_SEGM	DDC I2C Target Segment Address
0x46C0 07BC	DDC_OFFSET	DDC I2C Target Offset Address
0x46C0 07C0	DDC_COUNT1	DDC I2C Data Count
0x46C0 07C4	DDC_COUNT2	DDC I2C Data Count
0x46C0 07C8	DDC_STATUS	DDC I2C Status
0x46C0 07CC	DDC_CMD	DDC I2C Command
0x46C0 07D0	DDC_DATA	DDC I2C Data
0x46C0 07D4	DDC_FIFOCNT	DDC I2C FIFO Count
0x46C0 07E4	EPST	ROM Status
0x46C0 07E8	EPCM	ROM Command

Table 9-66. HDMI IP Core Gamut Registers

HEX ADDRESS	ACRONYM	REGISTER NAME
0x46C0 0800	GAMUT_HEADER1	Gamut Metadata
0x46C0 0804	GAMUT_HEADER2	Gamut Metadata

Table 9-66. HDMI IP Core Gamut Registers (continued)

HEX ADDRESS	ACRONYM	REGISTER NAME
0x46C0 0808	GAMUT_HEADER3	Gamut Metadata
0x46C0 080C - 0x46C0 0878 (0x4 byte increments)	GAMUT_DBYTE__0 - GAMUT_DBYTE__27	Gamut Metadata

Table 9-67. HDMI IP Core Audio Video Registers

HEX ADDRESS	ACRONYM	REGISTER NAME
0x46C0 0904	ACR_CTRL	ACR Control
0x46C0 0908	FREQ_SVAL	ACR Audio Frequency
0x46C0 090C	N_SVAL1	ACR N Software Value
0x46C0 0910	N_SVAL2	ACR N Software Value
0x46C0 0914	N_SVAL3	ACR N Software Value
0x46C0 0918	CTS_SVAL1	ACR CTS Software Value
0x46C0 091C	CTS_SVAL2	ACR CTS Software Value
0x46C0 0920	CTS_SVAL3	ACR CTS Software Value
0x46C0 0924	CTS_HVAL1	ACR CTS Hardware Value
0x46C0 0928	CTS_HVAL2	ACR CTS Hardware Value
0x46C0 092C	CTS_HVAL3	ACR CTS Hardware Value
0x46C0 0950	AUD_MODE	Audio In Mode
0x46C0 0954	SPDIF_CTRL	Audio In SPDIF Control
0x46C0 0960	HW_SPDIF_FS	Audio In SPDIF Extracted Fs and Length
0x46C0 0964	SWAP_I2S	Audio In I2S Channel Swap
0x46C0 096C	SPDIF_ERTH	Audio Error Threshold
0x46C0 0970	I2S_IN_MAP	Audio In I2S Data In Map
0x46C0 0974	I2S_IN_CTRL	Audio In I2S Control
0x46C0 0978	I2S_CHST0	Audio In I2S Channel Status
0x46C0 097C	I2S_CHST1	Audio In I2S Channel Status
0x46C0 0980	I2S_CHST2	Audio In I2S Channel Status
0x46C0 0984	I2S_CHST4	Audio In I2S Channel Status
0x46C0 0988	I2S_CHST5	Audio In I2S Channel Status
0x46C0 098C	ASRC	Audio Sample Rate Conversion
0x46C0 0990	I2S_IN_LEN	Audio I2S Input Length
0x46C0 09BC	HDMI_CTRL	HDMI Control
0x46C0 09C0	AUDO_TXSTAT	Audio Path Status
0x46C0 09CC	AUD_PAR_BUSCLK_1	Audio Input Data Rate Adjustment
0x46C0 09D0	AUD_PAR_BUSCLK_2	Audio Input Data Rate Adjustment
0x46C0 09D4	AUD_PAR_BUSCLK_3	Audio Input Data Rate Adjustment
0x46C0 09F0	TEST_TXCTRL	Test Control
0x46C0 09F4	DPD	Diagnostic Power Down
0x46C0 09F8	PB_CTRL1	Packet Buffer Control 1
0x46C0 09FC	PB_CTRL2	Packet Buffer Control 2
0x46C0 0A00	AVI_TYPE	Packet
0x46C0 0A04	AVI_VERS	Packet
0x46C0 0A08	AVI_LEN	Packet
0x46C0 0A0C	AVI_CHSUM	Packet
0x46C0 0A10 - 0x46C0 0A48 (0x4 byte increments)	AVI_DBYTE__0 - AVI_DBYTE__14	Packet
0x46C0 0A80	SPD_TYPE	SPD InfoFrame
0x46C0 0A84	SPD_VERS	SPD InfoFrame

Copyright © 2010–2015, Texas Instruments Incorporated

Table 9-67. HDMI IP Core Audio Video Registers (continued)

HEX ADDRESS	ACRONYM	REGISTER NAME
0x46C0 0A88	SPD_LEN	SPD InfoFrame
0x46C0 0A8C	SPD_CHSUM	SPD InfoFrame
0x46C0 0A90 - 0x46C0 0AF8 (0x4 byte increments)	SPD_DBYTE__0 - SPD_DBYTE__26	SPD InfoFrame
0x46C0 0B00	AUDIO_TYPE	Audio InfoFrame
0x46C0 0B04	AUDIO_VERS	Audio InfoFrame
0x46C0 0B08	AUDIO_LEN	Audio InfoFrame
0x46C0 0B0C	AUDIO_CHSUM	Audio InfoFrame
0x46C0 0B10 - 0x46C0 0B34 (0x4 byte increments)	AUDIO_DBYTE__0 - AUDIO_DBYTE__9	Audio InfoFrame
0x46C0 0B80	MPEG_TYPE	MPEG InfoFrame
0x46C0 0B84	MPEG_VERS	MPEG InfoFrame
0x46C0 0B88	MPEG_LEN	MPEG InfoFrame
0x46C0 0B8C	MPEG_CHSUM	MPEG InfoFrame
0x46C0 0B90 - 0x46C0 0BF8 (0x4 byte increments)	MPEG_DBYTE__0 - MPEG_DBYTE__26	MPEG InfoFrame
0x46C0 0C00 - 0x46C0 0C78 (0x4 byte increments)	GEN_DBYTE__0 - GEN_DBYTE__30	Generic Packet
0x46C0 0C7C	CP_BYTE1	General Control Packet
0x46C0 0C80 - 0x46C0 0CF8 (0x4 byte increments)	GEN2_DBYTE__0 - GEN2_DBYTE__30	Generic Packet 2
0x46C0 0CFC	CEC_ADDR_ID	CEC Slave ID

Table 9-68. HDMI IP Core CEC Registers

HEX ADDRESS	ACRONYM	REGISTER NAME
0x46C0 0D00	CEC_DEV_ID	CEC Device ID
0x46C0 0D04	CEC_SPEC	CEC Specification
0x46C0 0D08	CEC_SUFF	CEC Specification Suffix
0x46C0 0D0C	CEC_FW	CEC Firmware Revision
0x46C0 0D10	CEC_DBG_0	CEC Debug 0
0x46C0 0D14	CEC_DBG_1	CEC Debug 1
0x46C0 0D18	CEC_DBG_2	CEC Debug 2
0x46C0 0D1C	CEC_DBG_3	CEC Debug 3
0x46C0 0D20	CEC_TX_INIT	CEC Tx Initialization
0x46C0 0D24	CEC_TX_DEST	CEC Tx Destination
0x46C0 0D38	CEC_SETUP	CEC Set Up
0x46C0 0D3C	CEC_TX_COMMAND	CEC Tx Command
0x46C0 0D40 - 0x46C0 0D78 (0x4 byte increments)	CEC_TX_OPERAND__0 - CEC_TX_OPERAND__14	CEC Tx Operand
0x46C0 0D7C	CEC_TRANSMIT_DATA	CEC Transmit Data
0x46C0 0D88	CEC_CA_7_0	CEC Capture ID0
0x46C0 0D8C	CEC_CA_15_8	CEC Capture ID0
0x46C0 0D90	CEC_INT_ENABLE_0	CEC Interrupt Enable 0
0x46C0 0D94	CEC_INT_ENABLE_1	CEC Interrupt Enable 1
0x46C0 0D98	CEC_INT_STATUS_0	CEC Interrupt Status 0
0x46C0 0D9C	CEC_INT_STATUS_1	CEC Interrupt Status 1
0x46C0 0DB0	CEC_RX_CONTROL	CEC RX Control
0x46C0 0DB4	CEC_RX_COUNT	CEC Rx Count
0x46C0 0DB8	CEC_RX_CMD_HEADER	CEC Rx Command Header

Copyright © 2010–2015, Texas Instruments Incorporated

Table 9-68. HDMI IP Core CEC Registers (continued)

HEX ADDRESS	ACRONYM	REGISTER NAME
0x46C0 0DBC	CEC_RX_COMMAND	CEC Rx Command
0x46C0 0DC0 - 0x46C0 0DF8 (0x4 byte increments)	CEC_RX_OPERAND__0 - CEC_RX_OPERAND__14	CEC Rx Operand

Table 9-69. HDMI PHY Registers

HEX ADDRESS	ACRONYM	REGISTER NAME
0x4812 2004	TMDS_CNTL2	TMDS Control
0x4812 2008	TMDS_CNTL3	TMDS Control
0x4812 200C	BIST_CNTL	BIST Control
0x4812 2020	TMDS_CNTL9	TMDS Control

Copyright © 2010–2015, Texas Instruments Incorporated

9.10 High-Definition Video Processing Subsystem (HDVPSS)

The device High-Definition Video Processing Subsystem (HDVPSS) provides a video input interface for external imaging peripherals (that is, image sensors, video decoders, and others) and a video output interface for display devices, such as analog SDTV displays, analog and digital HDTV displays, and digital LCD panels. It includes HD and SD video encoders, and an HDMI transmitter interface.

The device HDVPSS features include:

- High quality (HD) and medium quality (SD) display processing pipelines with de-interlacing, scaling, noise reduction, alpha blending, chroma keying, color space conversion, flicker filtering, and pixel format conversion.
- HD and SD compositor features for PIP support.
- Format conversions (up to 1080p 60 Hz) include scan format conversion, scan rate conversion, aspect-ratio conversion, and frame size conversion.
- Supports additional video processing capabilities by using the subsystem's memory-to-memory feature.
- Two parallel video processing pipelines support HD (up to 1080p60) and SD (NTSC and PAL) simultaneous outputs.
  - HD analog component output with OSD and embedded timing codes (BT.1120)
    - 3-channel HD-DAC with 12-bit resolution.
    - External HSYNC and VSYNC signals available on silicon revision 2.x devices. For more details, see below.
  - SD analog output with OSD with embedded timing codes (BT.656)
    - Simultaneous component, S-video and composite
    - 4-channel SD-DAC with 10-bit resolution
    - Options available to support MacroVision and CGMS-A (contact local TI Sales rep for information).
  - Digital HDMI 1.3a compliant transmitter (for details, see Section 9.9, *High-Definition Multimedia Interface (HDMI)*).
- Up to two (one 16-bit, 24-bit, 30-bit and one 16-bit) digital video outputs (up to 165 MHz).
  - VOUT[0] can output up to 30-bit video and supports RGB, YUV444, Y and C and BT.656 modes.
  - VOUT[1] can output up to 16-bit video and supports Y and C and BT.656 modes.
- Two (one 16-bit, 24-bit and one 16-bit) independently configurable external video input capture ports (up to 165 MHz).
  - 16-bit and 24-bit HD digital video input or dual clock independent 8-bit SD inputs on each capture port.
    - VIN[0] can accept single-channel 16-bit, 24-bit (YCbCr and RGB) video or dual-channel 8-bit (YCbCr) video.
    - VIN[1] can accept single-channel 16-bit (YCbCr) video or dual-channel 8-bit (YCbCr) video.
  - Embedded sync and external sync modes are supported for all input configurations.
  - De-multiplexing of both pixel-to-pixel and line-to-line multiplexed streams, effectively supporting up to 16 simultaneous SD inputs with a glueless interface to an external multiplexer such as the TVP5158.
  - Additional features include: programmable color space conversion, scaler and chroma downsampler, ancillary VANC and VBI data capture (decoded by software), noise reduction.

- Availability of a combination of these digital video input and output port configurations, control signals for multiple 8-bit ports, as well as separate synchronization signals is limited by the device pin multiplexing (for details, see Section 6.5). The following video inputs and outputs are not multiplexed and are always available:
  - SD DAC composite, S-video, component out
  - HD DAC component out
  - HDMI output (same as VOUT[1])
  - 16-bit VOUT[0] (embedded sync)
  - Single 16-bit, dual 8-bit VIN[0] (embedded sync).
- Graphics features:
  - Three independently-generated graphics layers.
  - Each supports full-screen resolution graphics in HD, SD or both.
  - Up and down scaler optimized for graphics.
  - Global and pixel-level alpha blending supported.
- Discrete external HSYNC and VSYNC signals for the HD-DAC are available on silicon revision 2.x devices. These signals are mapped to the following pins (for details, see Section 4.2.20):
  - HSYNC - AR5, AT9, AR8
  - VSYNC - AL5, AP9, AL9

    The functionality of these pins is set using the SPARE_CTRL0 register (address: 0x4814 0724). Figure 9-67 and Table 9-70 describe the SPARE_CTRL0 register.

    Note: When changing this register, read original value and write back same value in Reserved fields.

    For example, these are the steps required to use the pins AR8 and AL9 as the DAC_HSYNC and VSYNC signals:

    1. Set the PINCTRLx registers for AR8 and AL9 as follows:
       - 0x4814 0894 = 0x00000001
       - 0x4814 0898 = 0x00000001
    2. Select analog VENC sync out option as follows:
       - 0x4814 0724 = 0x00000004

31	3	2	1	0
Reserved		SPR_CTL0_2	SPR_CTL0_1	Rsvd

Figure 9-67. SPARE_CTRL0 Register

Table 9-70. SPARE_CTRL0 Register Field Descriptions

Bit	Field	Value	Description
31:3	Reserved	0	Reserved
2	SPR_CTL0_2		To Select DAC or VOUT[0] Source Signals
		0	Selects VOUT[0]_AVID and VOUT[0]_FLD
		1	Selects DAC_HSYNC and DAC_VSYNC
1	SPR_CTL0_1		To Select DAC or VOUT[1] Source Signals
		0	Selects VOUT[1]_HSYNC and VOUT[1]_VSYNC
		1	Selects DAC_HSYNC and DAC_VSYNC
0	Reserved	0	Reserved

For more detailed information on specific features, see the HDVPSS chapter in the *AM389x Sitara ARM Processors Technical Reference Manual* (literature number SPRUGX7).

Copyright © 2010–2015, Texas Instruments Incorporated

9.10.1 HDVPSS Electrical Data and Timing

Table 9-71. Timing Requirements for HDVPSS Input

(see Figure 9-68 and Figure 9-69)

NO.			MIN	MAX	UNIT
VIN[x]A_CLK					
1	$t_{c(CLK)}$	Cycle time, VIN[x]A_CLK	6.06 (1)		ns
2	$t_{w(CLKH)}$	Pulse duration, VIN[x]A_CLK high (45% of t_c)	2.73		ns
3	$t_{w(CLKH)}$	Pulse duration, VIN[x]A_CLK low (45% of t_c)	2.73		ns
7	$t_{t(CLK)}$	Transition time, VIN[x]A_CLK (10%-90%)		2.64	ns
4	$t_{su(DE-CLK)}$	Input setup time, control valid to VIN[x]A_CLK high	3.75		ns
	$t_{su(VSYNC-CLK)}$				
	$t_{su(FLD-CLK)}$				
	$t_{su(HSYNC-CLK)}$				
	$t_{su(D-CLK)}$	Input setup time, data valid to VIN[x]A_CLK high	3.75		
5	$t_{h(CLK-DE)}$	Input hold time, control valid from VIN[x]A_CLK high	0 (2)		ns
	$t_{h(CLK-VSYNC)}$				
	$t_{h(CLK-FLD)}$				
	$t_{h(CLK-HSYNC)}$				
	$t_{h(CLK-D)}$	Input hold time, data valid from VIN[x]A_CLK high	0 (2)		
VIN[x]B_CLK					
1	$t_{c(CLK)}$	Cycle time, VIN[x]B_CLK	6.06 (1)		ns
2	$t_{w(CLKH)}$	Pulse duration, VIN[x]B_CLK high (45% of t_c)	2.73		ns
3	$t_{w(CLKH)}$	Pulse duration, VIN[x]B_CLK low (45% of t_c)	2.73		ns
7	$t_{t(CLK)}$	Transition time, VIN[x]B_CLK (10%-90%)		2.64	ns
4	$t_{su(DE-CLK)}$	Input setup time, control valid to VIN[x]B_CLK high	3.75		ns
	$t_{su(VSYNC-CLK)}$				
	$t_{su(FLD-CLK)}$				
	$t_{su(HSYNC-CLK)}$				
	$t_{su(D-CLK)}$	Input setup time, data valid to VIN[x]B_CLK high	3.75		
5	$t_{h(CLK-DE)}$	Input hold time, control valid from VIN[x]B_CLK high	0 (2)		ns
	$t_{h(CLK-VSYNC)}$				
	$t_{h(CLK-FLD)}$				
	$t_{h(CLK-HSYNC)}$				
	$t_{h(CLK-D)}$	Input hold time, data valid from VIN[x]B_CLK high	0 (2)		

(1) For maximum frequency of 165 MHz.
(2) When interfacing to a device with a minimum delay time of 0 ns, propagation delay of the data traces must be bigger than that of the clock traces.

Copyright © 2010–2015, Texas Instruments Incorporated

Table 9-72. Switching Characteristics Over Recommended Operating Conditions for HDVPSS Output

(see Figure 9-68 and Figure 9-70)

NO.	PARAMETER		MIN	MAX	UNIT
1	$t_{c(CLK)}$	Cycle time, VOUT[x]_CLK	6.06 (1)		ns
2	$t_{w(CLKH)}$	Pulse duration, VOUT[x]_CLK high (45% of t_c)	2.73		ns
3	$t_{w(CLKL)}$	Pulse duration, VOUT[x]_CLK low (45% of t_c)	2.73		ns
7	$t_{t(CLK)}$	Transition time, VOUT[x]_CLK (10%-90%)		2.64	ns
6	$t_{d(CLK-AVID)}$	Delay time, VOUT[x]_CLK to control valid	1.64 (2)	4.85 (3)	ns
	$t_{d(CLK-FLD)}$				
	$t_{d(CLK-VSYNC)}$				
	$t_{d(CLK-HSYNC)}$				
	$t_{d(CLK-RCR)}$	Delay time, VOUT[0]_CLK to data valid			
	$t_{d(CLK-GYYC)}$				
	$t_{d(CLK-BCBC)}$				
	$t_{d(CLK-YYC)}$	Delay time, VOUT[1]_CLK to data valid			
	$t_{d(CLK-C)}$				

(1) For maximum frequency of 165 MHz.
(2) Min Delay Time = T_c * 0.27, where T_c is the clock cycle time. **Note:** When interfacing to devices where setup and hold margins are minimal, care must be taken to match board trace length delay for clock and data signals.
(3) Max Delay Time = T_c * 0.80, where T_c is the clock cycle time. **Note:** When interfacing to devices where setup and hold margins are minimal, care must be taken to match board trace length delay for clock and data signals.

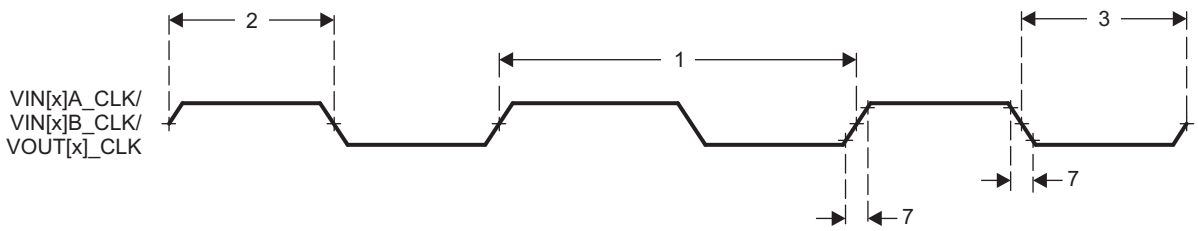

Figure 9-68. HDVPSS Clock Timing

Copyright © 2010–2015, Texas Instruments Incorporated

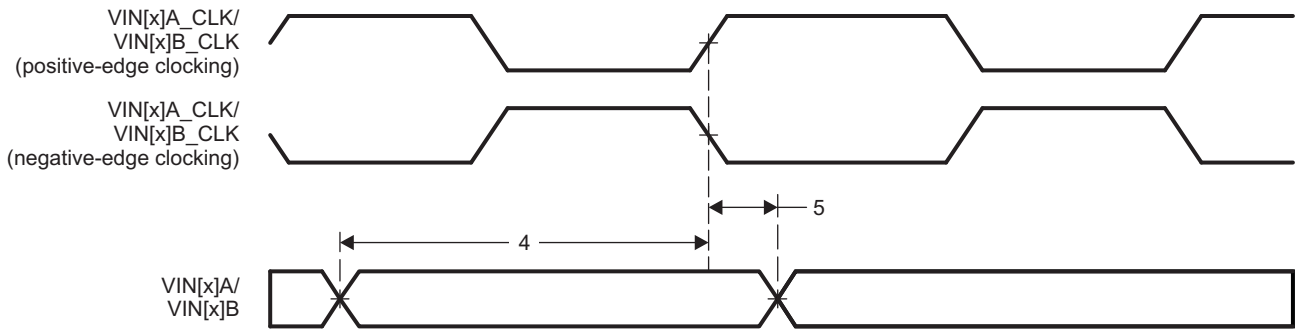

Figure 9-69. HDVPSS Input Timing

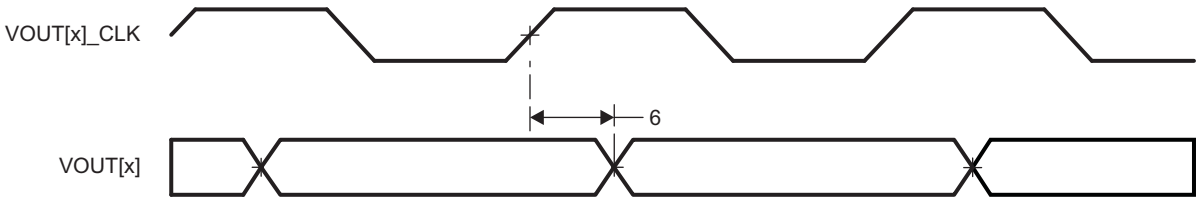

Figure 9-70. HDVPSS Output Timing

9.10.2 Video DAC Guidelines and Electrical Data and Timing

The device's analog video DAC outputs are designed to drive a 37.5-Ω load. Figure 9-71 describes a typical circuit that permits connecting the analog video output from the device to standard 75-Ω impedance video systems. The device requires the use of a buffer to drive the actual video outputs, so one solution is to use a video amplifier with integrated buffer and internal filter, such as the Texas Instruments THS7360, which provides a complete solution for the typical output circuit shown in Figure 9-71.

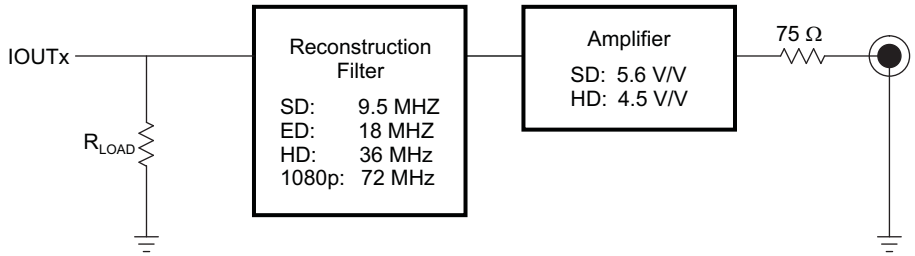

Figure 9-71. Typical Output Circuits for Analog Video from DACs

During board design, the onboard traces and parasitics must be matched for the channel. The video DAC output pin (IOUTx) is a very high-frequency analog signal and must be routed with extreme care. As a result, the path of this signal must be as short as possible, and as isolated as possible from other interfering signals. The load resistor and amplifier or buffer should be placed close together and as close as possible to the device pins. Other layout guidelines include:

- Take special care to bypass the DAC power supply pin with a capacitor.
- Place the 75-Ω resistor as close as possible (<0.5") to the amplifier or buffer (THS7360) output pin.
- To maintain a high quality video signal, 75-Ω (±10%) characteristic impedance traces should be used after the 75-Ω series resistor.
- Minimize input trace lengths to the device to reduce parasitic capacitance.
- Include solid ground return paths.
- Match trace lengths as close as possible within a video format group (that is, Y, Pb, and Pr for component output, and Y and C for s-video output should match each other).

For additional video DAC design guidelines, see the HDVPSS chapter in the *AM389x Sitara ARM Processors Technical Reference Manual* (literature number SPRUGX7).

Table 9-73. DAC Specifications

PARAMETER	CONDITIONS	MIN	TYP	MAX	UNIT
Resolution	HD DACs		12		Bits
	SD DACs		10		Bits
DC Accuracy - HD DACs					
Integral Non-Linearity (INL), best fit	HD DACs			1.5	LSB
	SD DACs			1.0	LSB
Differential Non-Linearity (DNL)	HD DACs			1.0	LSB
	SD DACs			0.5	LSB
Analog Output					
Output Resistor (R_{LOAD})	HD and SD DACs	-1%	37.5	+1%	Ω
Full-Scale Output Current (IFS)	HD and SD DACs R_{LOAD}		13.3		mA
Output Compliance Range	HD and SD DACs IFS = 13.3 mA, R_{LOAD} = 37.5 Ω	0		Vref	V
Zero Scale Offset Error (ZSET)	HD and SD DACs		0.5		LSB
Gain Error	HD and SD DACs	-10		10	%

Copyright © 2010–2015, Texas Instruments Incorporated

Table 9-73. DAC Specifications (continued)

PARAMETER	CONDITIONS	MIN	TYP	MAX	UNIT
Channel matching	HD and SD DACs			2	%
Recommended External Amplification	HD DACs		4.5		V/V
	SD DACs		5.6		V/V
Reference					
Reference Voltage Range (VREF)	Input with External Reference	-5%	0.5	+5%	V
Full-Scale Current Adjust Resistors	R_{BIAS_HD} and R_{BIAS_SD}	-1%	1.2	+1%	kΩ
Dynamic Specifications					
Output Update Rate (FCLK)	HD DACs at 1080i60		74.25		MHz
	HD DACs at 1080p60		148.5		MHz
	SD DACs		27	54	MHz
Signal Bandwidth	HD DACs at 1080i60		30		MHz
	HD DACs at 1080p60		60		MHz
	SD DACs		6		MHz
Spurious - Free Dynamic Range (SFDR)	HD DACs at 1080i60 FCLK = 74.25 MHz, FOUT = 30 MHz		60		dB
	HD DACs at 1080p60 FCLK = 148.5 MHz, FOUT = 60 MHz		60		dB
	SD DACs FCLK = 27 MHz / 54 MHz, FOUT = 6 MHz		60		dB

Copyright © 2010–2015, Texas Instruments Incorporated

9.11 Inter-Integrated Circuit (I2C)

The device includes two inter-integrated circuit (I2C) modules which provide an interface to other devices compliant with Philips Semiconductors Inter-IC bus (I2C-bus™) specification version 2.1. External components attached to this 2-wire serial bus can transmit or receive 8-bit data to or from the device through the I2C module. The I2C port *does not* support CBUS compatible devices.

The I2C port supports the following features:

- Compatible with Philips I2C Specification Revision 2.1 (January 2000)
- Standard and fast modes from 10 - 400 Kbps (no fail-safe IO buffers)
- Noise filter to remove noise 50 ns or less
- Seven- and ten-bit device addressing modes
- Multimaster transmitter or slave receiver mode
- Multimaster receiver or slave transmitter mode
- Combined master transmit/receive and receive or transmit modes
- Two DMA channels, one interrupt line
- Built-in FIFO (32 byte) for buffered read or write.

For more detailed information on the I2C peripheral, see the I2C chapter in the *AM389x Sitara ARM Processors Technical Reference Manual* (literature number SPRUGX7).

9.11.1 I2C Peripheral Register Descriptions

Table 9-74. I2C Registers

I2C0 HEX ADDRESS	I2C1 HEX ADDRESS	ACRONYM	REGISTER NAME
0x4802 8000	0x4802 A000	I2C_REVNB_LO	Module Revision (LOW BYTES)
0x4802 8004	0x4802 A004	I2C_REVNB_HI	Module Revision (HIGH BYTES)
0x4802 8010	0x4802 A010	I2C_SYSC	System configuration
0x4802 8020	0x4802 A020	I2C_EOI	I2C End of Interrupt
0x4802 8024	0x4802 A024	I2C_IRQSTATUS_RAW	I2C Status Raw
0x4802 8028	0x4802 A028	I2C_IRQSTATUS	I2C Status
0x4802 802C	0x4802 A02C	I2C_IRQENABLE_SET	I2C Interrupt Enable Set
0x4802 8030	0x4802 A030	I2C_IRQENABLE_CLR	I2C Interrupt Enable Clear
0x4802 8034	0x4802 A034	I2C_WE	I2C Wakeup Enable
0x4802 8038	0x4802 A038	I2C_DMARXENABLE_SET	Receive DMA Enable Set
0x4802 803C	0x4802 A03C	I2C_DMATXENABLE_SET	Transmit DMA Enable Set
0x4802 8040	0x4802 A040	I2C_DMARXENABLE_CLR	Receive DMA Enable Clear
0x4802 8044	0x4802 A044	I2C_DMATXENABLE_CLR	Transmit DMA Enable Clear
0x4802 8048	0x4802 A048	I2C_DMARXWAKE_EN	Receive DMA Wakeup
0x4802 804C	0x4802 A04C	I2C_DMATXWAKE_EN	Transmit DMA Wakeup
0x4802 8090	0x4802 A090	I2C_SYSS	System Status
0x4802 8094	0x4802 A094	I2C_BUF	Buffer Configuration
0x4802 8098	0x4802 A098	I2C_CNT	Data Counter
0x4802 809C	0x4802 A09C	I2C_DATA	Data Access
0x4802 80A4	0x4802 A0A4	I2C_CON	I2C Configuration
0x4802 80A8	0x4802 A0A8	I2C_OA	I2C Own Address
0x4802 80AC	0x4802 A0AC	I2C_SA	I2C Slave Address
0x4802 80B0	0x4802 A0B0	I2C_PSC	I2C Clock Prescaler
0x4802 80B4	0x4802 A0B4	I2C_SCLL	I2C SCL Low Time
0x4802 80B8	0x4802 A0B8	I2C_SCLH	I2C SCL High Time
0x4802 80BC	0x4802 A0BC	I2C_SYSTEST	System Test

Copyright © 2010–2015, Texas Instruments Incorporated

Table 9-74. I2C Registers (continued)

I2C0 HEX ADDRESS	I2C1 HEX ADDRESS	ACRONYM	REGISTER NAME
0x4802 80C0	0x4802 A0C0	I2C_BUFSTAT	I2C Buffer Status
0x4802 80C4	0x4802 A0C4	I2C_OA1	I2C Own Address 1
0x4802 80C8	0x4802 A0C8	I2C_OA2	I2C Own Address 2
0x4802 80CC	0x4802 A0CC	I2C_OA3	I2C Own Address 3
0x4802 80D0	0x4802 A0D0	I2C_ACTOA	Active Own Address
0x4802 80D4	0x4802 A0D4	I2C_SBLOCK	I2C Clock Blocking Enable

9.11.2 I2C Electrical Data and Timing

Table 9-75. Timing Requirements for I2C Input

(see Figure 9-72)

NO.				MIN	MAX	UNIT
1	$t_{c(SCL)}$	Cycle time, SCL	Standard_IC	10		µs
			Fast_IC	2.5		
2	$t_{su(SCLH-SDAL)}$	Setup time, SCL high before SDA low (for a repeated Start condition)	Standard_IC	4.7		µs
			Fast_IC	0.6		
3	$t_{h(SDAL-SCLL)}$	Hold time, SCL low after SDA low (for a Start and a repeated Start condition)	Standard_IC	4		µs
			Fast_IC	0.6		
4	$t_{w(SCLL)}$	Pulse duration, SCL low	Standard_IC	4.7		µs
			Fast_IC	1.3		
5	$t_{w(SCLH)}$	Pulse duration, SCL high	Standard_IC	4		µs
			Fast_IC	0.6		
6	$t_{su(SDAV-SCLH)}$	Setup time, SDA valid before SCL high	Standard_IC	250		ns
			Fast_IC	100		
7	$t_{h(SCLL-SDA)}$	Hold time, SDA valid after SCL low (for I2C bus devices)	Standard_IC	0	3.45	µs
			Fast_IC	0	0.9	
8	$t_{w(SDAH)}$	Pulse duration, SDA high between Stop and Start conditions	Standard_IC	4.7		µs
			Fast_IC	1.3		
13	$t_{su(SCLH-SDAH)}$	Setup time, high before SDA high (for Stop condition)	Standard_IC	4		µs
			Fast_IC	0.6		
14	$t_{w(SDA)}$	Pulse duration, spike (must be suppressed)	Fast_IC	0	50	ns
	$t_{w(SCL)}$		Fast_IC	0	50	

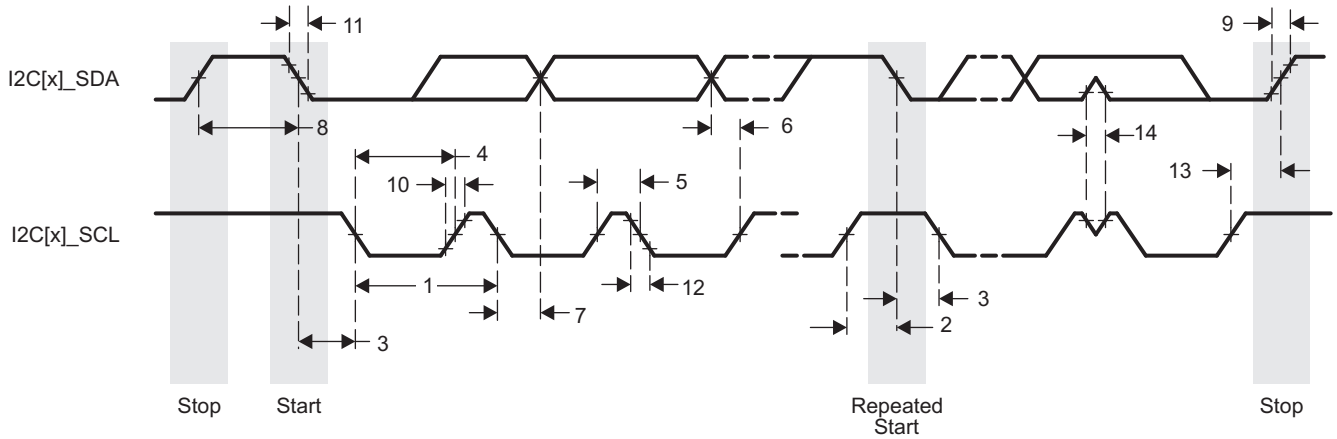

Figure 9-72. I2C Receive Timing

Copyright © 2010–2015, Texas Instruments Incorporated

Table 9-76. Switching Characteristics Over Recommended Operating Conditions for I2C Output

(see Figure 9-73)

NO.	PARAMETER			MIN	MAX	UNIT
16	$t_{c(SCL)}$	Cycle time, SCL	Standard_OC	10		µs
			Fast_OC	2.5		
17	$t_{su(SCLH-SDAL)}$	Setup Time, SCL high before SDA low (for a repeated START condition)	Standard_OC	4.7		µs
			Fast_OC	0.6		
18	$t_{h(SDAL-SCLL)}$	Hold time, SCL low after SDA low (for a START and a repeated START condition	Standard_OC	4		µs
			Fast_OC	0.6		
19	$t_{w(SCLL)}$	Pulse duration, SCL low	Standard_OC	4.7		µs
			Fast_OC	1.3		
20	$t_{w(SCLH)}$	Pulse duration, SCL high	Standard_OC	4		µs
			Fast_OC	0.6		
21	$t_{su(SDAV-SCLH)}$	Setup time, SDA valid before SCL high	Standard_OC	250		ns
			Fast_OC	100		
22	$t_{h(SCLL-SDA)}$	Hold time, SDA valid after SCL low (For IIC bus devices)	Standard_OC	0	3.45	µs
			Fast_OC	0	0.9	
23	$t_{w(SDAH)}$	Pulse duration, SDA high between STOP and START conditions	Standard_OC	4.7		µs
			Fast_OC	1.3		
28	$t_{su(SCLH-SDAH)}$	Setup time, high before SDA high (for STOP condition)	Standard_OC	4		µs
			Fast_OC	0.6		

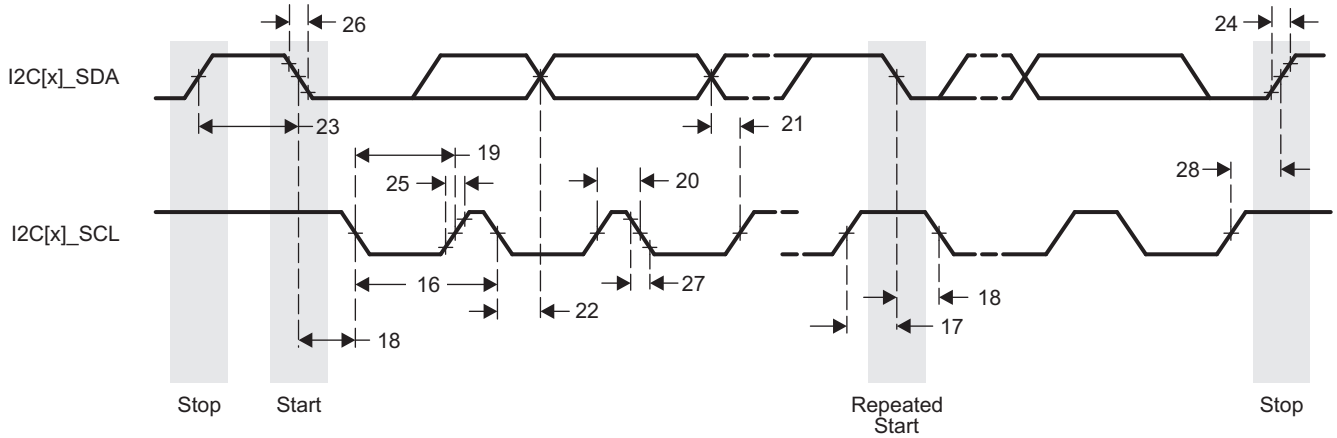

Figure 9-73. I2C Transmit Timing

9.12 Multichannel Audio Serial Port (McASP)

The multichannel audio serial port (McASP) functions as a general-purpose audio serial port optimized for the needs of multichannel audio applications. The McASP is useful for time-division multiplexed (TDM) stream, Inter-Integrated Sound (I2S) protocols, and intercomponent digital audio interface transmission (DIT).

9.12.1 McASP Device-Specific Information

The device includes three multichannel audio serial port (McASP) interface peripherals (McASP0, McASP1, and McASP2). The McASP module consists of a transmit and receive section. These sections can operate completely independently with different data formats, separate master clocks, bit clocks, and frame syncs or, alternatively, the transmit and receive sections may be synchronized. The McASP module also includes shift registers that may be configured to operate as either transmit data or receive data. The transmit section of the McASP can transmit data in either a time-division-multiplexed (TDM) synchronous serial format or in a digital audio interface (DIT) format where the bit stream is encoded for SPDIF, AES-3, IEC-60958, CP-430 transmission. The receive section of the McASP peripheral supports the TDM synchronous serial format.

The McASP module can support one transmit data format (either a TDM format or DIT format) and one receive format at a time. All transmit shift registers use the same format and all receive shift registers use the same format; however, the transmit and receive formats need not be the same. Both the transmit and receive sections of the McASP also support burst mode, which is useful for non-audio data (for example, passing control information between two devices).

The McASP peripheral has additional capability for flexible clock generation and error detection and handling, as well as error management.

The device McASP0 module has six serial data pins, while McASP1 and McASP2 are limited to two serial data pins each.

The McASP FIFO size is 256 bytes and two DMA and two interrupt requests are supported. Buffers are used transparently to better manage DMA, which can be leveraged to manage data flow more efficiently.

For more detailed information on and the functionality of the McASP peripheral, see the McASP chapter in the *AM389x Sitara ARM Processors Technical Reference Manual* (literature number SPRUGX7).

Copyright © 2010–2015, Texas Instruments Incorporated

9.12.2 McASP0, McASP1, and McASP2 Peripheral Register Descriptions

Table 9-77. McASP0, McASP1, and McASP2 Registers

MCASP0 ADDRESS	MCASP1 ADDRESS	MCASP2 ADDRESS	ACRONYM	REGISTER NAME
0x4803 8000	0x4803 C000	0x4805 0000	PID	Peripheral ID
0x4803 8004	0x4803 C004	0x4805 0004	PWRIDLE SYSCONFIG	Power Idle SYSCONFIG
0x4803 8010	0x4803 C010	0x4805 0010	PFUNC	Pin Function
0x4803 8014	0x4803 C014	0x4805 0014	PDIR	Pin Direction
0x4803 8018	0x4803 C018	0x4805 0018	PDOUT	Pin Data Out
0x4803 801C	0x4803 C01C	0x4805 001C	PDIN	Pin Data Input (Read) Read returns pin data input
			PDSET	Pin Data Set (Write) Writes effect pin data set (alternate write address PDOUT)
0x4803 8020	0x4803 C020	0x4805 0020	PDCLR	Pin Data Clear
0x4803 8044	0x4803 C044	0x4805 0044	GBLCTL	Global Control
0x4803 8048	0x4803 C048	0x4805 0048	AMUTE	Mute Control
0x4803 804C	0x4803 C04C	0x4805 004C	LBCTL	Loop-Back Test Control
0x4803 8050	0x4803 C050	0x4805 0050	TXDITCTL	Transmit DIT Mode Control
0x4803 8060	0x4803 C060	0x4805 0060	GBLCTLR	Alias of GBLCTL containing only receiver reset bits; allows transmit to be reset independently from receive
0x4803 8064	0x4803 C064	0x4805 0064	RXMASK	Receiver Bit Mask
0x4803 8068	0x4803 C068	0x4805 0068	RXFMT	Receive Bitstream Format
0x4803 806C	0x4803 C06C	0x4805 006C	RXFMCTL	Receive Frame Sync Control
0x4803 8070	0x4803 C070	0x4805 0070	ACLKRCTL	Receive Clock Control
0x4803 8074	0x4803 C074	0x4805 0074	AHCLKRCTL	High Frequency Receive Clock Control
0x4803 8078	0x4803 C078	0x4805 0078	RXTDM	Receive TDM Slot 0-31
0x4803 807C	0x4803 C07C	0x4805 007C	EVTCTLR	Receiver Interrupt Control
0x4803 8080	0x4803 C080	0x4805 0080	RXSTAT	Status Receiver
0x4803 8084	0x4803 C084	0x4805 0084	RXTDMSLOT	Current Receive TDM Slot
0x4803 8088	0x4803 C088	0x4805 0088	RXCLKCHK	Receiver Clock Check Control
0x4803 808C	0x4803 C08C	0x4805 008C	REVTCTL	Receiver DMA Event Control
0x4803 80A0	0x4803 C0A0	0x4805 00A0	GBLCTLX	Alias of GBLCTL containing only transmit reset bits; allows transmit to be reset independently from receive
0x4803 80A4	0x4803 C0A4	0x4805 00A4	TXMASK	Transmit Format Unit Bit Mask
0x4803 80A8	0x4803 C0A8	0x4805 00A8	TXFMT	Transmit Bitstream Format
0x4803 80AC	0x4803 C0AC	0x4805 00AC	TXFMCTL	Transmit Frame Sync Control
0x4803 80B0	0x4803 C0B0	0x4805 00B0	ACLKXCTL	Transmit Clock Control
0x4803 80B4	0x4803 C0B4	0x4805 00B4	AHCLKXCTL	High Frequency Transmit Clock Control
0x4803 80B8	0x4803 C0B8	0x4805 00B8	TXTDM	Transmit TDM Slot 0-31
0x4803 80BC	0x4803 C0BC	0x4805 00BC	EVTCTLX	Transmitter Interrupt Control
0x4803 80C0	0x4803 C0C0	0x4805 00C0	TXSTAT	Status Transmitter

Copyright © 2010–2015, Texas Instruments Incorporated

Table 9-77. McASP0, McASP1, and McASP2 Registers (continued)

MCASP0 ADDRESS	MCASP1 ADDRESS	MCASP2 ADDRESS	ACRONYM	REGISTER NAME
0x4803 80C4	0x4803 C0C4	0x4805 00C4	TXTDMSLOT	Current Transmit TDM Slot
0x4803 80C8	0x4803 C0C8	0x4805 00C8	TXCLKCHK	Transmit Clock Check Control
0x4803 80CC	0x4803 C0CC	0x4805 00CC	XEVTCTL	Transmitter DMA Control
0x4803 80D0	0x4803 C0D0	0x4805 00D0	CLKADJEN	One-shot Clock Adjust Enable
0x4803 8100	0x4803 C100	0x4805 0100	DITCSRA0	Left (Even TDM Slot) Channel Status Register File
0x4803 8104	0x4803 C104	0x4805 0104	DITCSRA1	Left (Even TDM Slot) Channel Status Register File
0x4803 8108	0x4803 C108	0x4805 0108	DITCSRA2	Left (Even TDM Slot) Channel Status Register File
0x4803 810C	0x4803 C10C	0x4805 010C	DITCSRA3	Left (Even TDM Slot) Channel Status Register File
0x4803 8110	0x4803 C110	0x4805 0110	DITCSRA4	Left (Even TDM Slot) Channel Status Register File
0x4803 8114	0x4803 C114	0x4805 0114	DITCSRA5	Left (Even TDM Slot) Channel Status Register File
0x4803 8118	0x4803 C118	0x4805 0118	DITCSRB0	Right (Odd TDM Slot) Channel Status Register File
0x4803 811C	0x4803 C11C	0x4805 011C	DITCSRB1	Right (Odd TDM Slot) Channel Status Register File
0x4803 8120	0x4803 C120	0x4805 0120	DITCSRB2	Right (Odd TDM Slot) Channel Status Register File
0x4803 8124	0x4803 C124	0x4805 0124	DITCSRB3	Right (Odd TDM Slot) Channel Status Register File
0x4803 8128	0x4803 C128	0x4805 0128	DITCSRB4	Right (Odd TDM Slot) Channel Status Register File
0x4803 812C	0x4803 C12C	0x4805 012C	DITCSRB5	Right (Odd TDM Slot) Channel Status Register File
0x4803 8130	0x4803 C130	0x4805 0130	DITUDRA0	Left (Even TDM Slot) User Data Register File
0x4803 8134	0x4803 C134	0x4805 0134	DITUDRA1	Left (Even TDM Slot) User Data Register File
0x4803 8138	0x4803 C138	0x4805 0138	DITUDRA2	Left (Even TDM Slot) User Data Register File
0x4803 813C	0x4803 C13C	0x4805 013C	DITUDRA3	Left (Even TDM Slot) User Data Register File
0x4803 8140	0x4803 C140	0x4805 0140	DITUDRA4	Left (Even TDM Slot) User Data Register File
0x4803 8144	0x4803 C144	0x4805 0144	DITUDRA5	Left (Even TDM Slot) User Data Register File
0x4803 8148	0x4803 C148	0x4805 0148	DITUDRB0	Right (Odd TDM Slot) User Data Register File
0x4803 814C	0x4803 C14C	0x4805 014C	DITUDRB1	Right (Odd TDM Slot) User Data Register File

Copyright © 2010–2015, Texas Instruments Incorporated

Table 9-77. McASP0, McASP1, and McASP2 Registers (continued)

MCASP0 ADDRESS	MCASP1 ADDRESS	MCASP2 ADDRESS	ACRONYM	REGISTER NAME
0x4803 8150	0x4803 C150	0x4805 0150	DITUDRB2	Right (Odd TDM Slot) User Data Register File
0x4803 8154	0x4803 C154	0x4805 0154	DITUDRB3	Right (Odd TDM Slot) User Data Register File
0x4803 8158	0x4803 C158	0x4805 0158	DITUDRB4	Right (Odd TDM Slot) User Data Register File
0x4803 815C	0x4803 C15C	0x4805 015C	DITUDRB5	Right (Odd TDM Slot) User Data Register File
0x4803 8180 - 0x4803 81BC	0x4803 C180 - 0x4803 C1BC	0x4805 0180 - 0x4805 01BC	XRSRCTL0 - XRSRCTL15	Serializer 0 Control - Serializer 15 Control
0x4803 8200 - 0x4803 8 23C	0x4803 C200 - 0x4803 C23C	0x4805 0200 - 0x4805 023C	TXBUF0 - TXBUF15	Transmit Buffer for Serializer 0 - Transmit Buffer for Serializer 15
0x4803 8280 - 0x4803 82BC	0x4803 C280 - 0x4803 C2BC	0x4805 0280 - 0x4805 02BC	RXBUF0 - RXBUF15	Receive Buffer for Serializer 0 - Receive Buffer for Serializer 15
0x4803 9000	0x4803 D000	0x4805 1000	BUFFER_CFGRD _WFIFOCTL	Write FIFO Control
0x4803 9004	0x4803 D004	0x4805 1004	BUFFER_CFGRD _WFIFOSTS	Write FIFO Status
0x4803 9008	0x4803 D008	0x4805 1008	BUFFER_CFGRD _RFIFOCTL	Read FIFO Control
0x4803 900C	0x4803 D00C	0x4805 100C	BUFFER_CFGRD _RFIFOSTS	Read FIFO Status

Table 9-78. McASP Registers Accessed Through DAT Port

HEX ADDRESS	REGISTER NAME	McASP0 BYTE ADDRESS	McASP0 BYTE ADDRESS	McASP0 BYTE ADDRESS	REGISTER DESCRIPTION
Read Accesses	RBUF	4600 0000	4640 0000	4680 0000	Receive buffer DMA port address. Cycles through receive serializers, skipping over transmit serializers and inactive serializers. Starts at the lowest serializer at the beginning of each time slot. Reads from DMA port only if XBUSEL = 0 in XFMT.
Write Accesses	XBUF	4600 0000	4640 0000	4680 0000	Transmit buffer DMA port address. Cycles through transmit serializers, skipping over receive and inactive serializers. Starts at the lowest serializer at the beginning of each time slot. Writes to DMA port only if RBUSEL = 0 in RFMT.

9.12.3 McASP Electrical Data and Timing

Table 9-79. Timing Requirements for McASP[(1)]

(see Figure 9-74)

NO.				MIN	MAX	UNIT
1	$t_{c(AHCLKRX)}$	Cycle time, MCA[x]_AHCLKR or MCA[x]_AHCLKX		20		ns
2	$t_{w(AHCLKRX)}$	Pulse duration, MCA[x]_AHCLKR or MCA[x]_AHCLKX high or low		10		ns
3	$t_{c(ACLKRX)}$	Cycle time, MCA[x]_ACLKR or MCA[x]_AHCLKX		20		ns
4	$t_{w(ACLKRX)}$	Pulse duration, MCA[x]_ACLKR or MCA[x]_AHCLKX high or low		10		ns
5	$t_{su(AFSRX-ACLKRX)}$	Setup time, MCA[x]_AFSR or MCA[x]_AFSX input valid before MCA[x]_ACLKR or MCA[x]_ACLKX	ACLKR or ACLKX int	11.5		ns
			ACLKR or ACLKX ext in	4		
			ACLKR or ACLKX ext out	4		
6	$t_{h(ACLKRX-AFSRX)}$	Hold time, MCA[x]_AFSR or MCA[x]_AFSX input valid after MCA[x]_ACLKR or MCA[x]_ACLKX	ACLKR or ACLKX int	-1		ns
			ACLKR or ACLKX ext in	0.5		
			ACLKR or ACLKX ext out	0.5		
7	$t_{su(AXR-ACLKRX)}$	Setup time, MCA[x]_AXR input valid before MCA[x]_ACLKR or MCA[x]_ACLKX	ACLKR or ACLKX int	11.5		ns
			ACLKR or ACLKX ext in	4		
			ACLKR or ACLKX ext out	4		
8	$t_{h(ACLKRX-AXR)}$	Hold time, MCA[x]_AXR input valid after MCA[x]_ACLKR or MCA[x]_ACLKX	ACLKR or ACLKX int	-1		ns
			ACLKR or ACLKX ext in	0.5		
			ACLKR or ACLKX ext out	0.5		

(1) ACLKR internal: ACLKRCTL.CLKRM=1, PDIR.ACLKR = 1
ACLKR external input: ACLKRCTL.CLKRM=0, PDIR.ACLKR=0
ACLKR external output: ACLKRCTL.CLKRM=0, PDIR.ACLKR=1
ACLKX internal: ACLKXCTL.CLKXM=1, PDIR.ACLKX = 1
ACLKX external input: ACLKXCTL.CLKXM=0, PDIR.ACLKX=0
ACLKX external output: ACLKXCTL.CLKXM=0, PDIR.ACLKX=1

Copyright © 2010–2015, Texas Instruments Incorporated

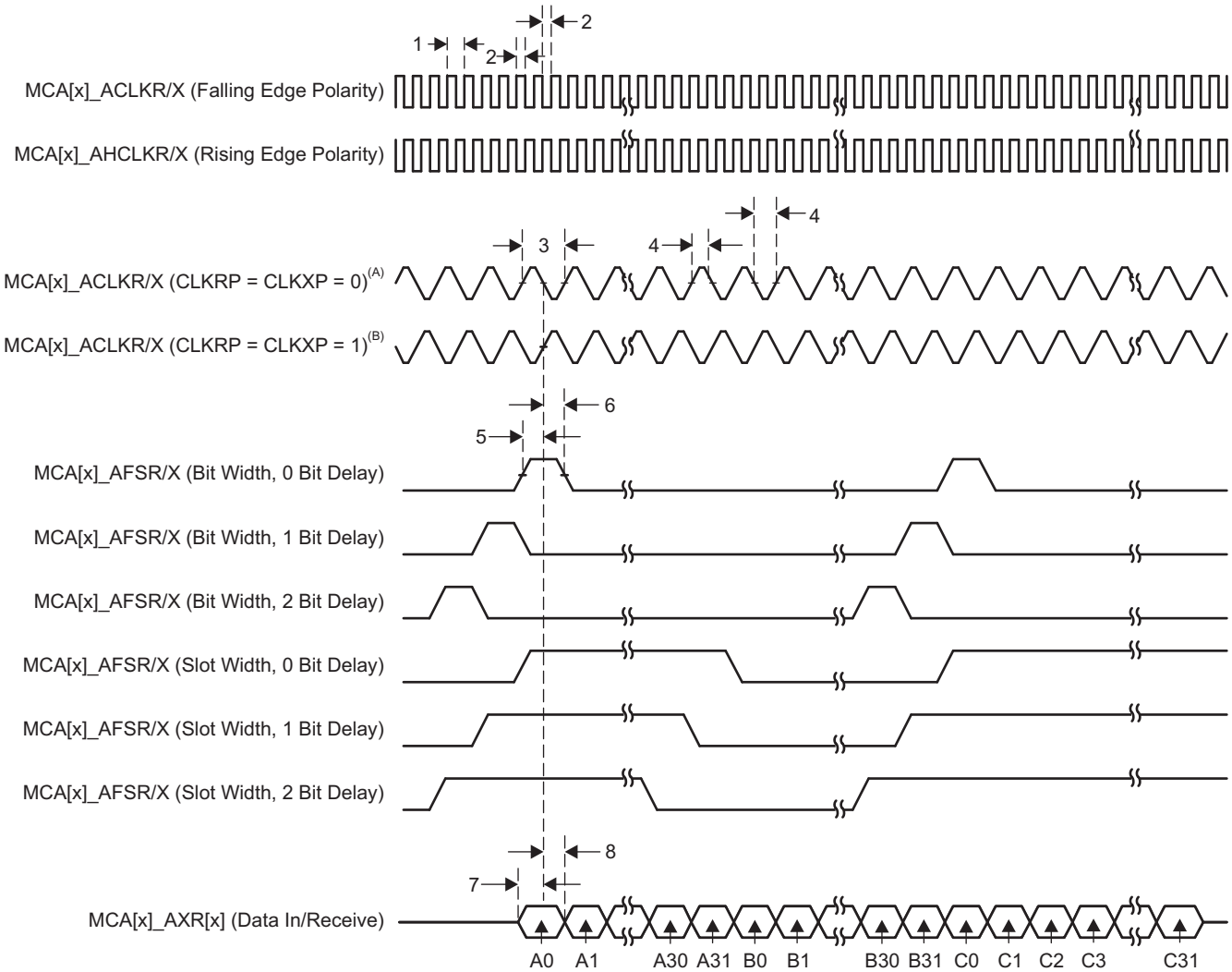

A. For CLKRP = CLKXP = 0, the McASP transmitter is configured for rising edge (to shift data out) and the McASP receiver is configured for falling edge (to shift data in).

B. For CLKRP = CLKXP = 1, the McASP transmitter is configured for falling edge (to shift data out) and the McASP receiver is configured for rising edge (to shift data in).

Figure 9-74. McASP Input Timing

Table 9-80. Switching Characteristics Over Recommended Operating Conditions for McASP[(1)]

(see Figure 9-75)

NO.	PARAMETER			MIN	MAX	UNIT
9	$t_{c(AHCLKRX)}$	Cycle time, MCA[x]_AHCLKR/X		20[(2)]		ns
10	$t_{w(AHCLKRX)}$	Pulse duration, MCA[x]_AHCLKR/X high or low		0.5P - 2.5[(3)]		ns
11	$t_{c(ACLKRX)}$	Cycle time, MCA[x]_ACLKR or ACLKX		20		ns
12	$t_{w(ACLKRX)}$	Pulse duration, MCA[x]_ACLKR or ACLKX high or low		0.5P - 2.5[(3)]		ns
13	$t_{d(ACLKRX-AFSRX)}$	Delay time, MCA[x]_ACLKR or ACLKX transmit edge to MCA[x]_AFSR/X output valid	ACLKR or ACLKX int	0	6	ns
			ACLKR or ACLKX ext in	2	13.5	
		Delay time, MCA[x]_ACLKR or ACLKX transmit edge to MCA[x]_AFSR/X output valid with Pad Loopback	ACLKR or ACLKX ext out	2	13.5	
14	$t_{d(ACLKX-AXR)}$	Delay time, MCA[x]_ACLKX transmit edge to MCA[x]_AXR output valid	ACLKX int	-1	5	ns
			ACLKX ext in	2	13.5	
		Delay time, MCA[x]_ACLKX transmit edge to MCA[x]_AXR output valid with Pad Loopback	ACLKX ext out	2	13.5	
15	$t_{dis(ACLKX-AXR)}$	Disable time, MCA[x]_ACLKX transmit edge to MCA[x]_AXR output high impedance	ACLKX int	-1	5	ns
			ACLKX ext in	2	13.5	
		Disable time, MCA[x]_ACLKX transmit edge to MCA[x]_AXR output high impedance with Pad Loopback	ACLKX ext out	2	13.5	

(1) ACLKR internal: ACLKRCTL.CLKRM=1, PDIR.ACLKR = 1
ACLKR external input: ACLKRCTL.CLKRM=0, PDIR.ACLKR=0
ACLKR external output: ACLKRCTL.CLKRM=0, PDIR.ACLKR=1
ACLKX internal: ACLKXCTL.CLKXM=1, PDIR.ACLKX = 1
ACLKX external input: ACLKXCTL.CLKXM=0, PDIR.ACLKX=0
ACLKX external output: ACLKXCTL.CLKXM=0, PDIR.ACLKX=1
(2) 50 MHz
(3) P = AHCLKR or AHCLKX period.

Copyright © 2010–2015, Texas Instruments Incorporated

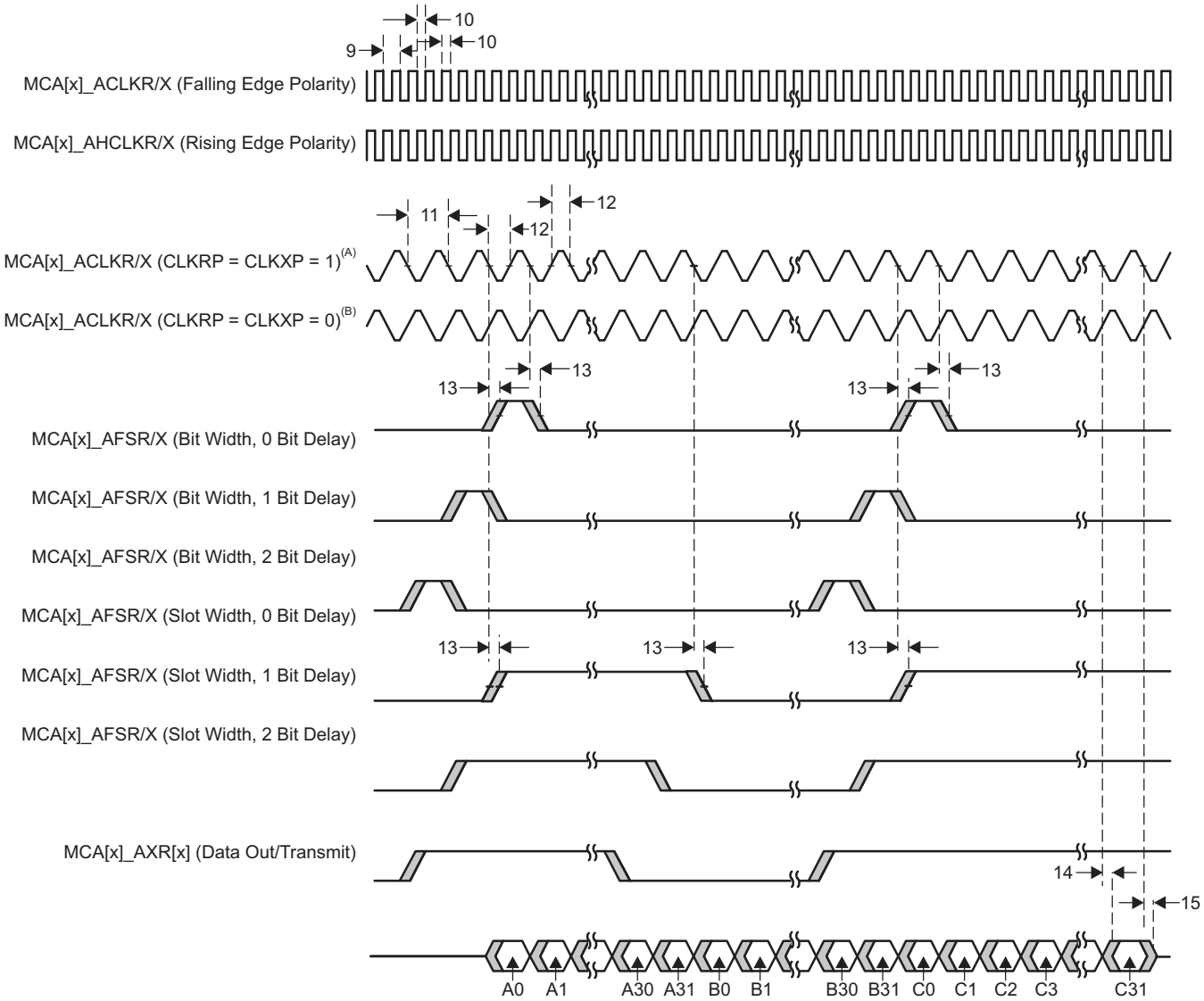

A. For CLKRP = CLKXP = 1, the McASP transmitter is configured for falling edge (to shift data out) and the McASP receiver is configured for rising edge (to shift data in).

B. For CLKRP = CLKXP = 0, the McASP transmitter is configured for rising edge (to shift data out) and the McASP receiver is configured for falling edge (to shift data in).

Figure 9-75. McASP Output Timing

9.13 Multichannel Buffered Serial Port (McBSP)

The McBSP provides these functions:

- Full-duplex communication
- Double-buffered data registers, which allow a continuous data stream
- Independent framing and clocking for receive and transmit
- Direct interface to industry-standard codecs, analog interface chips (AICs), and other serially connected analog-to-digital (AD) and digital-to-analog (DA) devices
- Supports TDM, I2S, and similar formats
- External shift clock or an internal, programmable frequency shift clock for data transfer
- 5KB Tx and Rx buffer
- Supports three interrupt and two DMA requests.

The McBSP module may support two types of data transfer at the system level:

- The full-cycle mode, for which one clock period is used to transfer the data, generated on one edge and captured on the same edge (one clock period later).
- The half-cycle mode, for which one half clock period is used to transfer the data, generated on one edge and captured on the opposite edge (one half clock period later). Note that a new data is generated only every clock period, which secures the required hold time. The interface clock (CLKX or CLKR) activation edge (data or frame sync capture and generation) has to be configured accordingly with the external peripheral (activation edge capability) and the type of data transfer required at the system level.

For more detailed information on the McBSP peripheral, see the McBSP chapter in the *AM389x Sitara ARM Processors Technical Reference Manual* (literature number SPRUGX7).

The following sections describe the timing characteristics for applications in normal mode (that is, the McBSP connected to one peripheral) and TDM applications in multipoint mode.

9.13.1 McBSP Peripheral Registers

This McBSP peripheral registers are described in the *AM389x Sitara ARM Processors Technical Reference Manual* (literature number SPRUGX7). Each register is documented as an offset from a base address for the peripheral. The base addresses for all of the peripherals are shown in Table 3-19, *L3 Memory Map*.

Copyright © 2010–2015, Texas Instruments Incorporated

9.13.2 McBSP Electrical Data and Timing

Table 9-81. Timing Requirements for McBSP - Master Mode(1)

(see Figure 9-76)

NO.			MIN	MAX	UNIT
6	$t_{su(DRV-CLKAE)}$	Setup time, MCB_DR valid before MCB_CLK active edge(2)	3.5		ns
7	$t_{h(CLKAE-DRV)}$	Hold time, MCB_DR valid after MCB_CLK active edge(2)	0.1		ns

(1) The timings apply to all configurations regardless of MCB_CLK polarity and which clock edges are used to drive output data and capture input data.
(2) MCB_CLK corresponds to either MCB_CLKX or MCB_CLKR.

Table 9-82. Switching Characteristics Over Recommended Operating Conditions for McBSP - Master Mode(1)

(see Figure 9-76)

NO.	PARAMETER		MIN	MAX	UNIT
1	$t_{c(CLK)}$	Cycle time, output MCB_CLK period(2)	20.83		ns
2	$t_{w(CLKL)}$	Pulse duration, output MCB_CLK low(2)	0.5*P - 1(3)		ns
3	$t_{w(CLKH)}$	Pulse duration, output MCB_CLK high(2)	0.5*P - 1(3)		ns
4	$t_{d(CLKAE-FSV)}$	Delay time, output MCB_CLK active edge to output MCB_FS valid(2)(4)	0.7	9.4	ns
5	$t_{d(CLKXAE-DXV)}$	Delay time, output MCB_CLKX active edge to output MCB_DX valid	0.7	9.4	ns

(1) The timings apply to all configurations regardless of MCB_CLK polarity and which clock edges are used to drive output data and capture input data.
(2) MCB_CLK corresponds to either MCB_CLKX or MCB_CLKR.
(3) P = MCB_CLKX or MCB_CLKR output CLK period, in ns; use whichever value is greater. This parameter applies to the maximum McBSP frequency. Operate serial clocks (CLKX or CLKR) in the reasonable range of 40-60 duty cycle.
(4) MCB_FS corresponds to either MCB_FSX or MCB_FSR.

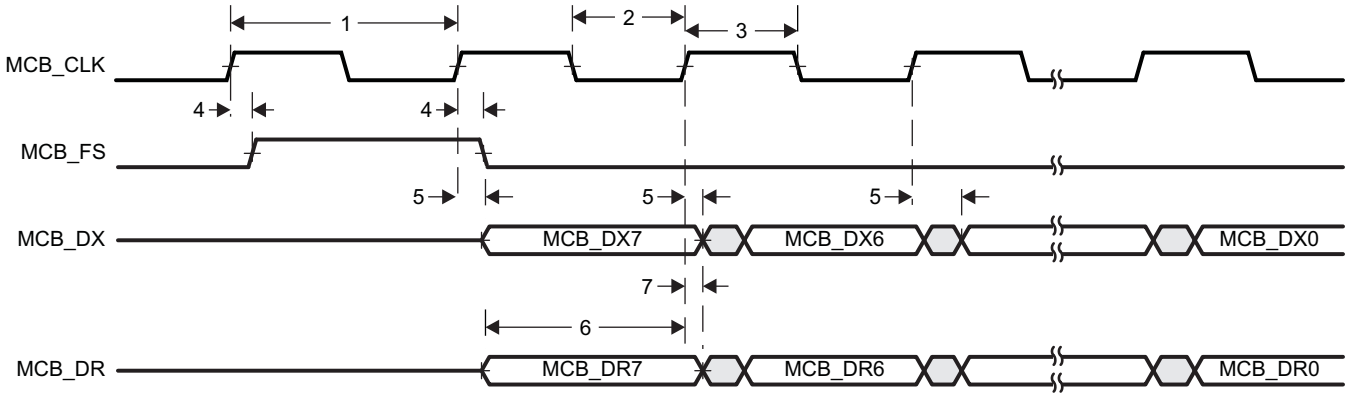

A. The timings apply to all configurations regardless of MCB_CLK polarity and which clock edges are used to drive output data and capture input data.
B. MCBSP_CLK corresponds to either MCBSP_CLKX or MCBSP_CLKR; MCBSP_FS corresponds to either MCBSP_FSX or MCBSP_FSR. McBSP in 6-pin mode: DX and DR as data pins; CLKX, CLKR, FSX and FSR as control pins. McBSP in 4-pin mode: DX and DR as data pins; CLKX and FSX pins as control pins. The CLKX and FSX pins are internally looped back via software configuration, respectively to the CLKR and FSR internal signals for data receive.
C. The polarity of McBSP frame synchronization is software configurable.
D. The active clock edge selection of MCBSP_CLK (rising or falling) on which MCBSP_DX data is latched and MCBSP_DR data is sampled is software configurable.
E. Timing diagrams are for data delay set to 1.
F. For further details about the registers used to configure McBSP, see the McBSP chapter in the *AM389x Sitara ARM Processors Technical Reference Manual* (literature number SPRUGX7).

Figure 9-76. McBSP Master Mode Timing

Table 9-83. Timing Requirements for McBSP - Slave Mode(1)

(see Figure 9-77)

NO.			MIN	MAX	UNIT
1	$t_{c(CLK)}$	Cycle time, MCB_CLK period(2)	20.83		ns
2	$t_{w(CLKL)}$	Pulse duration, MCB_CLK low(2)	0.5*P - 1(3)		ns
3	$t_{w(CLKH)}$	Pulse duration, MCB_CLK high(2)	0.5*P - 1(3)		ns
4	$t_{su(FSV-CLKAE)}$	Setup time, MCB_FS valid before MCB_CLK active edge(2)(4)	3.8		ns
5	$t_{h(CLKAE-FSV)}$	Hold time, MCB_FS valid after MCB_CLK active edge(2)(4)	0		ns
7	$t_{su(DRV-CLKAE)}$	Setup time, MCB_DR valid before MCB_CLK active edge(2)	3.8		ns
8	$t_{h(CLKAE-DRV)}$	Hold time, MCB_DR valid after MCB_CLK active edge(2)	0		ns

(1) The timings apply to all configurations regardless of MCB_CLK polarity and which clock edges are used to drive output data and capture input data.
(2) MCB_CLK corresponds to either MCB_CLKX or MCB_CLKR.
(3) P = MCB_CLKX or MCB_CLKR output CLK period, in ns; use whichever value is greater. This parameter applies to the maximum McBSP frequency. Operate serial clocks (CLKX or CLKR) in the reasonable range of 40-60 duty cycle.
(4) MCB_FS corresponds to either MCB_FSX or MCB_FSR.

Table 9-84. Switching Characteristics Over Recommended Operating Conditions for McBSP - Slave Mode(1)

(see Figure 9-77)

NO.	PARAMETER		MIN	MAX	UNIT
6	$t_{d(CLKXAE-DXV)}$	Delay time, input MCB_CLKx active edge to output MCB_DX valid	0.5	12.5	ns

(1) The timings apply to all configurations regardless of MCB_CLK polarity and which clock edges are used to drive output data and capture input data.

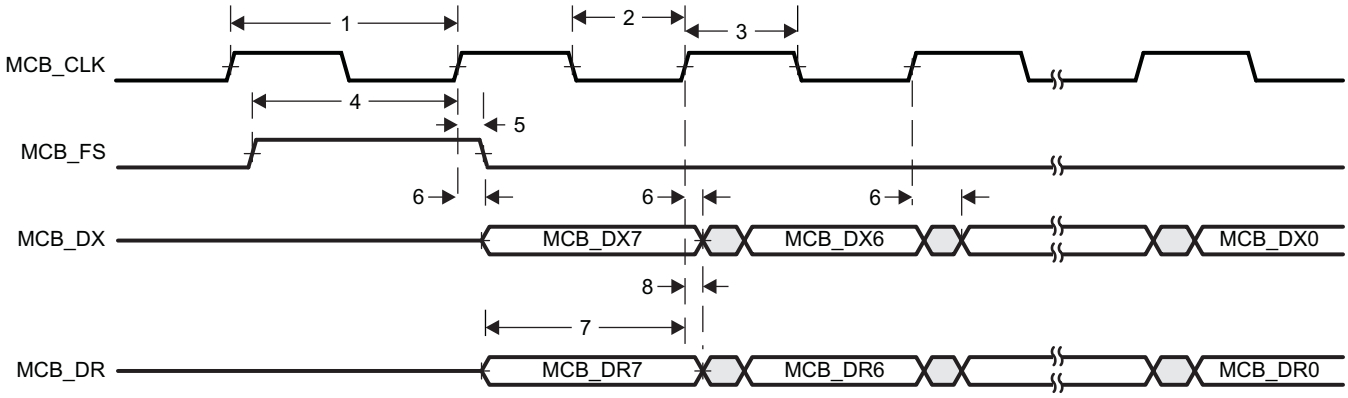

A. The timings apply to all configurations regardless of MCB_CLK polarity and which clock edges are used to drive output data and capture input data.
B. MCBSP_CLK corresponds to either MCBSP_CLKX or MCBSP_CLKR; MCBSP_FS corresponds to either MCBSP_FSX or MCBSP_FSR. McBSP in 6-pin mode: DX and DR as data pins; CLKX, CLKR, FSX and FSR as control pins. McBSP in 4-pin mode: DX and DR as data pins; CLKX and FSX pins as control pins. The CLKX and FSX pins are internally looped back via software configuration, respectively to the CLKR and FSR internal signals for data receive.
C. The polarity of McBSP frame synchronization is software configurable.
D. The active clock edge selection of MCBSP_CLK (rising or falling) on which MCBSP_DX data is latched and MCBSP_DR data is sampled is software configurable.
E. Timing diagrams are for data delay set to 1.
F. For further details about the registers used to configure McBSP, see the McBSP chapter in the *AM389x Sitara ARM Processors Technical Reference Manual* (literature number SPRUGX7).

Figure 9-77. McBSP Slave Mode Timing

Copyright © 2010–2015, Texas Instruments Incorporated

9.14 Peripheral Component Interconnect Express (PCIe)

The device supports connections to PCIe-compliant devices via the integrated PCIe master or slave bus interface. The PCIe module is comprised of a dual-mode PCIe core and a SerDes PHY. The device implements a single two-lane PCIe 2.0 (5.0 GT/s) endpoint or root complex port.

The device PCIe supports the following features:

- Supports Gen1 and Gen2 in x1 or x2 mode
- One port with up to 2 x 5 GT/s lanes
- Single virtual channel (VC), single traffic class (TC)
- Single function in end-point mode
- Automatic width and speed negotiation and lane reversal
- Max payload: 128 byte outbound, 256 byte inbound
- Automatic credit management
- ECRC generation and checking
- Configurable BAR filtering
- Supports PCIe messages
- Legacy interrupt reception (RC) and generation (EP)
- MSI generation and reception
- PCI device power management, except D3 cold with vaux
- Active state power management state L0 and L1.

For more detailed information on the PCIe port peripheral module, see the PCIe chapter in the *AM389x Sitara ARM Processors Technical Reference Manual* (literature number SPRUGX7).

The PCIe peripheral on the device conforms to the PCI Express Base 2.0 Specification.

9.14.1 PCIe Design and Layout Specifications

NOTE

For more information on PCB layout, see the *DM816xx Easy CYG Package PCB Escape Routing* application report (literature number SPRABK6).

9.14.1.1 Clock Source

A standard 100-MHz PCIe differential clock source must be used for PCIe operation (for details, see Section 8.3.2).

9.14.1.2 PCIe Connections and Interface Compliance

The PCIe interface on the device is compliant with the PCI Express Base 2.0 Specification. Refer to the PCIe specifications for all connections that are described in it. For coupling capacitor selection, see Section 9.14.1.2.1.

The use of PCIe-compatible bridges and switches is allowed for interfacing with more than one other processor or PCIe device.

9.14.1.2.1 Coupling Capacitors

AC coupling capacitors are required on the transmit data pair. Table 9-85 shows the requirements for these capacitors.

Table 9-85. AC Coupling Capacitors Requirements

PARAMETER	MIN	TYP	MAX	UNIT
PCIe AC coupling capacitor value	75		200	nF

Table 9-85. AC Coupling Capacitors Requirements (continued)

PARAMETER	MIN	TYP	MAX	UNIT
PCIe AC coupling capacitor package size (1)		0402	0603	EIA (2)

(1) The physical size of the capacitor should be as small as practical. Use the same size on both lines in each pair, placed side by side.
(2) EIA LxW units; for example, a 0402 is a 40x20 mil (thousandths of an inch) surface-mount capacitor.

9.14.1.2.2 Polarity Inversion

The PCIe specification requires polarity inversion support. This means, for layout purposes, polarity is unimportant since each signal can change its polarity on-die inside the chip. This means polarity within a lane is unimportant for layout.

9.14.1.2.3 Lane Reversal

The device supports lane reversal. Since there are two lanes, this means the lanes can be switched in layout for better PCB routing.

9.14.1.3 Non-Standard PCIe Connections

The following sections contain suggestions for any PCIe connection that is ***not*** described in the official PCIe specification, such as an on-board device-to-device connection, or device-to-other PCIe-compliant processor connection.

9.14.1.3.1 PCB Stackup Specifications

Table 9-86 shows the stackup and feature sizes required for these types of PCIe connections.

Table 9-86. PCIe PCB Stackup Specifications

PARAMETER	MIN	TYP	MAX	UNIT
PCB Routing and Plane Layers	4	6	-	Layers
Signal Routing Layers	2	3	-	Layers
Number of ground plane cuts allowed within PCIe routing region	-	-	0	Cuts
Number of layers between PCIe routing area and reference plane (1)	-	-	0	Layers
PCB Routing clearance	-	4	-	Mils
PCB Trace width (2)	-	4	-	Mils
PCB BGA escape via pad size	-	20	-	Mils
PCB BGA escape via hole size	-	10		Mils
Processor BGA pad size (3)(4)		0.3		mm

(1) A reference plane may be a ground plane or the power plane referencing the PCIe signals.
(2) In breakout area.
(3) Non-solder mask defined pad.
(4) Per IPC-7351A BGA pad size guideline.

9.14.1.3.2 Routing Specifications

The PCIe data signal traces must be routed to achieve 100 Ω (±20%) differential impedance and 60 Ω (±15%) single-ended impedance. The single-ended impedance is required because differential signals are extremely difficult to closely couple on PCBs and, therefore, single-ended impedance becomes important. These requirements are the same as those recommended in the *PCIe Motherboard Checklist 1.0* document, available from PCI-SIG.

These impedances are impacted by trace width, trace spacing, distance between signals and referencing planes, and dielectric material. Verify with a PCB design tool that the trace geometry for both data signal pairs result in as close to 100 Ω differential impedance and 60 Ω single-ended impedance as possible. For best accuracy, work with your PCB fabricator to ensure this impedance is met.

Copyright © 2010–2015, Texas Instruments Incorporated

In general, closely coupled differential signal traces are not an advantage on PCBs. When differential signals are closely coupled, tight spacing and width control is necessary. Very small width and spacing variations affect impedance dramatically, so tight impedance control can be more problematic to maintain in production.

Loosely coupled PCB differential signals make impedance control much easier. Wider traces and spacing make obstacle avoidance easier, and trace width variations do not affect impedance as much; therefore, it is easier to maintain an accurate impedance over the length of the signal. The wider traces also show reduced skin effect and, therefore, often result in better signal integrity.

Table 9-87 shows the routing specifications for the PCIe data signals.

Table 9-87. PCIe Routing Specifications

PARAMETER	MIN	TYP	MAX	UNIT
PCIe signal trace length			10 (1)	Inches
Differential pair trace matching			10 (2)	Mils
Number of stubs allowed on PCIe traces (3)			0	Stubs
TX or RX pair differential impedance	80	100	120	Ω
TX or RX single-ended impedance	51	60	69	Ω
Pad size of vias on PCIe trace			25 (4)	Mils
Hole size of vias on PCIe trace			14	Mils
Number of vias on each PCIe trace			3	Vias (5)
PCIe differential pair to any other trace spacing	2*DS (6)			

(1) Beyond this, signal integrity may suffer.
(2) For example, RXP0 within 10 Mils of RXN0.
(3) In-line pads may be used for probing.
(4) 35-Mil antipad max recommended.
(5) Vias must be used in pairs with their distance minimized.
(6) DS = differential spacing of the PCIe traces.

9.14.2 PCIe Peripheral Register Descriptions

Table 9-88. PCIe Registers

HEX ADDRESS	ACRONYM	REGISTER NAME
0x5100 0000	PID	Peripheral Version and ID
0x5100 0004	CMD_STATUS	Command Status
0x5100 0008	CFG_SETUP	Config Transaction Setup
0x5100 000C	IOBASE	IO TLP Base
0x5100 0010	TLPCFG	TLP Attribute Configuration
0x5100 0014	RSTCMD	Reset Command and Status
0x5100 0020	PMCMD	Power Management Command
0x5100 0024	PMCFG	Power Management Configuration
0x5100 0028	ACT_STATUS	Activity Status
0x5100 0030	OB_SIZE	Outbound Size
0x5100 0034	DIAG_CTRL	Diagnostic Control
0x5100 0038	ENDIAN	Endian Mode
0x5100 003C	PRIORITY	CBA Transaction Priority
0x5100 0050	IRQ_EOI	End of Interrupt
0x5100 0054	MSI_IRQ	MSI Interrupt IRQ
0x5100 0064	EP_IRQ_SET	Endpoint Interrupt Request Set
0x5100 0068	EP_IRQ_CLR	Endpoint Interrupt Request Clear
0x5100 006C	EP_IRQ_STATUS	Endpoint Interrupt Status
0x5100 0070	GPRO	General Purpose 0

Copyright © 2010–2015, Texas Instruments Incorporated

Table 9-88. PCIe Registers (continued)

HEX ADDRESS	ACRONYM	REGISTER NAME
0x5100 0074	GPR1	General Purpose 1
0x5100 0078	GPR2	General Purpose 2
0x5100 007C	GPR3	General Purpose 3
0x5100 0100	MSI0_IRQ_STATUS_RAW	MSI 0 Interrupt Raw Status
0x5100 0104	MSI0_IRQ_STATUS	MSI 0 Interrupt Enabled Status
0x5100 0108	MSI0_IRQ_ENABLE_SET	MSI 0 Interrupt Enable Set
0x5100 010C	MSI0_IRQ_ENABLE_CLR	MSI 0 Interrupt Enable Clear
0x5100 0180	IRQ_STATUS_RAW	Raw Interrupt Status
0x5100 0184	IRQ_STATUS	Interrupt Enabled Status
0x5100 0188	IRQ_ENABLE_SET	Interrupt Enable Set
0x5100 018C	IRQ_ENABLE_CLR	Interrupt Enable Clear
0x5100 01C0	ERR_IRQ_STATUS_RAW	Raw ERR Interrupt Status
0x5100 01C4	ERR_IRQ_STATUS	ERR Interrupt Enabled Status
0x5100 01C8	ERR_IRQ_ENABLE_SET	ERR Interrupt Enable Set
0x5100 01CC	ERR_IRQ_ENABLE_CLR	ERR Interrupt Enable Clear
0x5100 01D0	PMRST_IRQ_STATUS_RAW	Power Management and Reset Interrupt Status
0x5100 01D4	PMRST_IRQ_STATUS	Power Management and Reset Interrupt Enabled Status
0x5100 01D8	PMRST_ENABLE_SET	Power Management and Reset Interrupt Enable Set
0x5100 01DC	PMRST_ENABLE_CLR	Power Management and Reset Interrupt Enable Clear
0x5100 0200	OB_OFFSET_INDEXn	Outbound Translation Region N Offset Low and Index
0x5100 0204	OB_OFFSETn_HI	Outbound Translation Region N Offset High
0x5100 0300	IB_BAR0	Inbound Translation Bar Match 0
0x5100 0304	IB_START0_LO	Inbound Translation 0 Start Address Low
0x5100 0308	IB_START0_HI	Inbound Translation 0 Start Address High
0x5100 030C	IB_OFFSET0	Inbound Translation 0 Address Offset
0x5100 0310	IB_BAR1	Inbound Translation Bar Match 1
0x5100 0314	IB_START1_LO	Inbound Translation 1 Start Address Low
0x5100 0318	IB_START1_HI	Inbound Translation 1 Start Address High
0x5100 031C	IB_OFFSET1	Inbound Translation 1 Address Offset
0x5100 0320	IB_BAR2	Inbound Translation Bar Match 2
0x5100 0324	IB_START2_LO	Inbound Translation 2 Start Address Low
0x5100 0328	IB_START2_HI	Inbound Translation 2 Start Address High
0x5100 032C	IB_OFFSET2	Inbound Translation 2 Address Offset
0x5100 0330	IB_BAR3	Inbound Translation Bar Match 3
0x5100 0334	IB_START3_LO	Inbound Translation 3 Start Address Low
0x5100 0338	IB_START3_HI	Inbound Translation 3 Start Address High
0x5100 033C	IB_OFFSET3	Inbound Translation 3 Address Offset
0x5100 0380	PCS_CFG0	PCS Configuration 0
0x5100 0384	PCS_CFG1	PCS Configuration 1
0x5100 0388	PCS_STATUS	PCS Status
0x5100 0390	SERDES_CFG0	SerDes Configuration for Lane 0
0x5100 0394	SERDES_CFG1	SerDes Configuration for Lane 1

Copyright © 2010–2015, Texas Instruments Incorporated

9.14.3 PCIe Electrical Data and Timing

Texas Instruments (TI) has performed the simulation and system characterization to ensure that the PCIe peripheral meets all AC timing specifications as required by the PCI Express Base 2.0 Specification. Therefore, the AC timing specifications are not reproduced here. For more information on the AC timing specifications, see Sections 4.3.3.5 and 4.3.4.4 of the PCI Express Base 2.0 Specification.

9.15 Real-Time Clock (RTC)

The real-time clock is a precise timer that can generate interrupts on intervals specified by the user. Interrupts can occur every second, minute, hour, or day. The clock, itself, can track the passage of real time for durations of several years, provided it has a sufficient power source the whole time.

The basic purpose for the RTC is to keep time of day. The other equally important purpose of the RTC is for Digital Rights management. Some degree of tamper-proofing is needed to ensure that simply stopping, resetting, or corrupting the RTC does not go unnoticed; so, if this occurs, the application can re-acquire the time of day from a trusted source. The final purpose of RTC is to wake up the rest of the device from a power-down state. The RTC features include:

- Time information (hours, minutes, seconds) directly in binary coded decimal (BCD), for easy decoding.
- Calendar information (day, month, year, day of week) directly in BCD code up to year 2099.
- Shadow time and calendar access; ease of reading time.
- Interrupt generation, periodically (1d, 1h, 1m, 1s) or at a precise time of day or date.
- 30-second time correction (crystal frequency compensation).
- OCP slave port for register access.
- Supports power idle protocol with SWakeUp capable on alarm or timer events.

The RTC is driven by SYSCLK18 (32.768 kHz) or an optional 32.768-kHz clock can be input on the CLKIN32 clock input pin for RTC reference. If the CLKIN32 pin is not connected to a 32.768-kHz clock input, this pin should be pulled low.

Figure 9-78 shows the major components of the RTC.

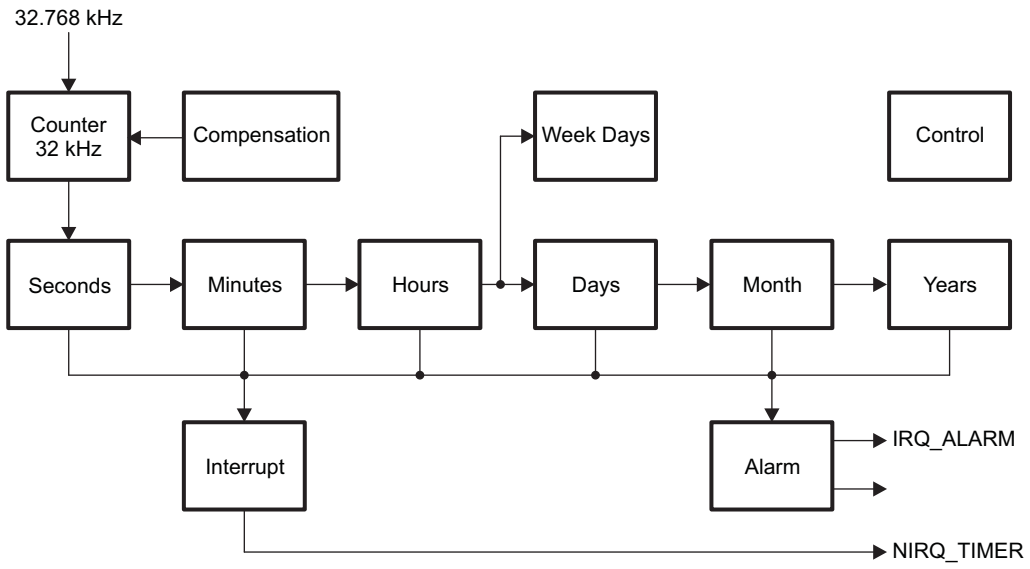

Figure 9-78. Real-Time Clock Block Diagram

9.15.1 RTC Register Descriptions

Table 9-89. RTC Registers

HEX ADDRESS	ACRONYM	REGISTER NAME
0x480C 0000	SECONDS_REG	Seconds
0x480C 0004	MINUTES_REG	Minutes
0x480C 0008	HOURS_REG	Hours
0x480C 000C	DAYS_REG	Day of the Month
0x480C 0010	MONTHS_REG	Month

Copyright © 2010–2015, Texas Instruments Incorporated

Table 9-89. RTC Registers (continued)

HEX ADDRESS	ACRONYM	REGISTER NAME
0x480C 0014	YEARS_REG	Year
0x480C 0018	WEEK_REG	Day of the Week
0x480C 0020	ALARM_SECONDS_REG	Alarm Seconds
0x480C 0024	ALARM_MINUTES_REG	Alarm Minutes
0x480C 0028	ALARM_HOURS_REG	Alarm Hours
0x480C 002C	ALARM_DAYS_REG	Alarm Days
0x480C 0030	ALARM_MONTHS_REG	Alarm Months
0x480C 0034	ALARM_YEARS_REG	Alarm Years
0x480C 0040	RTC_CTRL_REG	Control
0x480C 0044	RTC_STATUS_REG	Status
0x480C 0048	RTC_INTERRUPTS_REG	Interrupt Enable
0x480C 004C	RTC_COMP_LSB_REG	Compensation (LSB)
0x480C 0050	RTC_COMP_MSB_REG	Compensation (MSB)
0x480C 0054	RTC_OSC_REG	Oscillator
0x480C 0060	RTC_SCRATCH0_REG	Scratch 0 (general-purpose)
0x480C 0064	RTC_SCRATCH1_REG	Scratch 1 (general-purpose)
0x480C 0068	RTC_SCRATCH2_REG	Scratch 2 (general-purpose)
0x480C 006C	KICK0	Kick 0 (write protect)
0x480C 0070	KICK1	Kick 1 (write protect)
0x480C 0074	RTC_REVISION	Revision
0x480C 0078	RTC_SYSCONFIG	Clock Management Configuration
0x480C 007A	RTC_IRQWAKEEN_0	Wakeup Generation

Copyright © 2010–2015, Texas Instruments Incorporated

9.16 Secure Digital and Secure Digital Input Output (SD and SDIO)

The device SD and SDIO Controller has following features:

- Secure Digital (SD) memory card with Secure Data IO (SDIO)
- Supports SDHC (SD high capacity)
- SD and SDIO protocol support
- Programmable clock frequency
- 1024 byte read or write FIFO to lower system overhead
- Slave DMA transfer capability
- Full compliance with SD command and response sets, as defined in the SD physical layer specification v2.00
- Full compliance with SDIO command and response sets and interrupt and read-wait suspend-resume operations, as defined in the SD part E1 specification v 2.00
- Full compliance with SD host controller standard specification sets as defined in the SD card specification part A2 v2.00.

For more detailed information on SD and SDIO, see the SD and SDIO chapter in the *AM389x Sitara ARM Processors Technical Reference Manual* (literature number SPRUGX7).

9.16.1 SD and SDIO Peripheral Register Descriptions

Table 9-90. SD and SDIO Registers(1)

HEX ADDRESS	ACRONYM	REGISTER NAME
0x4806 0000	SD_HL_REV	IP Revision Identifier
0x4806 0004	SD_HL_HWINFO	Hardware Configuration
0x4806 0010	SD_HL_SYSCONFIG	Clock Management Configuration
0x4806 0110	SD_SYSCONFIG	System Configuration
0x4806 0114	SD_SYSSTATUS	System Status
0x4806 0124	SD_CSRE	Card status response error
0x4806 0128	SD_SYSTEST	System Test
0x4806 012C	SD_CON	Configuration
0x4806 0130	SD_PWCNT	Power counter
0x4806 0200	SD_SDMASA	SDMA System address:
0x4806 0204	SD_BLK	Transfer Length Configuration
0x4806 0208	SD_ARG	Command argument
0x4806 020C	SD_CMD	Command and transfer mode
0x4806 0210	SD_RSP10	Command Response 0 and 1
0x4806 0214	SD_RSP32	Command Response 2 and 3
0x4806 0218	SD_RSP54	Command Response 4 and 5
0x4806 021C	SD_RSP76	Command Response 6 and 7
0x4806 0220	SD_DATA	Data
0x4806 0224	SD_PSTATE	Present state
0x4806 0228	SD_HCTL	Host Control
0x4806 022C	SD_SYSCTL	SD system control
0x4806 0230	SD_STAT	Interrupt status
0x4806 0234	SD_IE	Interrupt SD enable
0x4806 0238	SD_ISE	
0x4806 023C	SD_AC12	Auto CMD12 Error Status
0x4806 0240	SD_CAPA	Capabilities
0x4806 0248	SD_CUR_CAPA	Maximum current capabilities

(1) SD and SDIO registers are limited to 32-bit data accesses; 16-bit and 8-bit accesses are not allowed and can corrupt register content.

Copyright © 2010–2015, Texas Instruments Incorporated

Table 9-90. SD and SDIO Registers[(1)] (continued)

HEX ADDRESS	ACRONYM	REGISTER NAME
0x4806 0250	SD_FE	Force Event
0x4806 0254	SD_ADMAES	ADMA Error Status
0x4806 0258	SD_ADMASAL	ADMA System address Low bits
0x4806 025C	SD_ADMASAH	ADMA System address High bits
0x4806 02FC	SD_REV	Versions

9.16.2 SD and SDIO Electrical Data and Timing

9.16.2.1 SD Identification and Standard SD Mode

Table 9-91. Timing Requirements for SD and SDIO—SD Identification and Standard SD Mode

(see Figure 9-80, Figure 9-82)

NO.			MIN	MAX	UNIT
SD Identification Mode					
1	$t_{su(CMDV-CLKH)}$	Setup time, SD_CMD valid before SD_CLK rising clock edge	1198.2		ns
2	$t_{h(CLKH-CMDIV)}$	Hold time, SD_CMD valid after SD_CLK rising clock edge	1249.0		ns
Standard SD Mode					
1	$t_{su(CMDV-CLKH)}$	Setup time, SD_CMD valid before SD_CLK rising clock edge	4.1		ns
2	$t_{h(CLKH-CMDIV)}$	Hold time, SD_CMD valid after SD_CLK rising clock edge	1.9		ns
3	$t_{su(DATV-CLKH)}$	Setup time, SD_DATx valid before SD_CLK rising clock edge	4.1		ns
4	$t_{h(CLKH-DATV)}$	Hold time, SD_DATx valid after SD_CLK rising clock edge	1.9		ns

Table 9-92. Switching Characteristics Over Recommended Operating Conditions for SD and SDIO—SD Identification and Standard SD Mode

(see Figure 9-79, Figure 9-80, Figure 9-81, Figure 9-82)

NO.	PARAMETER		MIN	MAX	UNIT
SD Identification Mode					
8	$f_{op(CLKID)}$	Identification mode frequency, SD_CLK		400	kHz
	$t_{c(CLKID)}$	Identification mode period, SD_CLK	2500.0		ns
13	$t_{d(CLKH-CMD)}$	Delay time, SD_CLK rising clock edge to SD_CMD transition	6.5	2492.5	ns
Standard SD Mode					
7	$f_{op(CLK)}$	Operating frequency, SD_CLK		24	MHz
	$t_{c(CLK)}$	Operating period, SD_CLK	41.7		ns
9	$t_{w(CLKL)}$	Pulse duration, SD_CLK low	0.45*P[(1)]	0.55*P[(1)]	ns
10	$t_{w(CLKH)}$	Pulse duration, SD_CLK high	0.45*P[(1)]	0.55*P[(1)]	ns
13	$t_{d(CLKH-CMD)}$	Delay time, SD_CLK rising clock edge to SD_CMD transition	6.3	35.3	ns
14	$t_{d(CLKH-DAT)}$	Delay time, SD_CLK rising clock edge to SD_DATx transition	6.3	35.3	ns

(1) P = SD_CLK period.

9.16.2.2 High-Speed SD Mode

Table 9-93. Timing Requirements for SD and SDIO—High-Speed SD Mode

(see Figure 9-80, Figure 9-82)

NO.			MIN	MAX	UNIT
1	$t_{su(CMDV-CLKH)}$	Setup time, SD_CMD valid before SD_CLK rising clock edge	4.1		ns
2	$t_{h(CLKH-CMDV)}$	Hold time, SD_CMD valid after SD_CLK rising clock edge	1.9		ns
3	$t_{su(DATV-CLKH)}$	Setup time, SD_DATx valid before SD_CLK rising clock edge	4.1		ns
4	$t_{h(CLKH-DATV)}$	Hold time, SD_DATx valid after SD_CLK rising clock edge	1.9		ns

Copyright © 2010–2015, Texas Instruments Incorporated

Table 9-94. Switching Characteristics Over Recommended Operating Conditions for SD and SDIO—High-Speed SD Mode

(see Figure 9-79, Figure 9-80, Figure 9-81, Figure 9-82)

NO.	PARAMETER		MIN	MAX	UNIT
7	$f_{op(CLK)}$	Operating frequency, SD_CLK		48	MHz
	$t_{c(CLK)}$	Operating period: SD_CLK	20.8		ns
8	$f_{op(CLKID)}$	Identification mode frequency, SD_CLK		400	kHz
	$t_{c(CLKID)}$	Identification mode period: SD_CLK	2500.0		ns
9	$t_{w(CLKL)}$	Pulse duration, SD_CLK low	0.5*P (1)		ns
10	$t_{w(CLKH)}$	Pulse duration, SD_CLK high	0.5*P (1)		ns
11	$t_{r(CLK)}$	Rise time, All Signals (10% to 90%)		2.2	ns
12	$t_{f(CLK)}$	Fall time, All Signals (10% to 90%)		2.2	ns
13	$t_{d(CLKL-CMD)}$	Delay time, SD_CLK rising clock edge to SD_CMD transition	2.5 (2)	13.9	ns
14	$t_{d(CLKL-DAT)}$	Delay time, SD_CLK rising clock edge to SD_DATx transition	2.5 (2)	13.9	ns

(1) P = SD_CLK period.
(2) Longer DATA and CMD PCB track routing than clock trace routing may be needed to meet SD device input hold time.

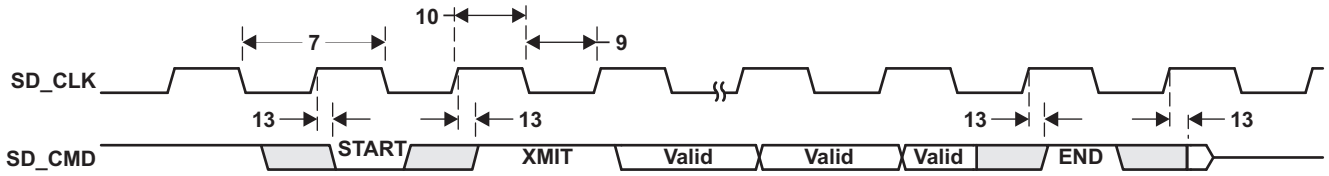

Figure 9-79. SD Host Command Timing

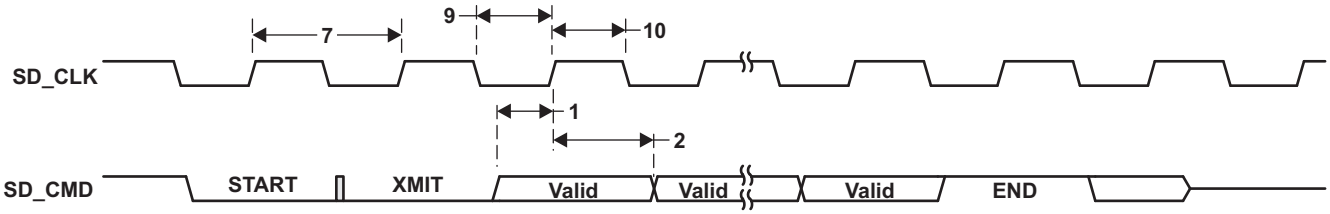

Figure 9-80. SD Card Response Timing

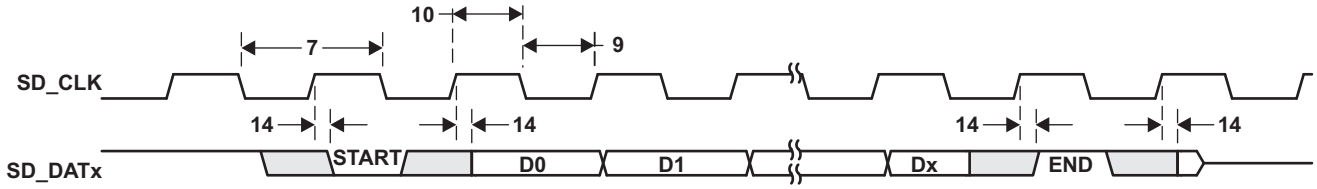

Figure 9-81. SD Host Write Timing

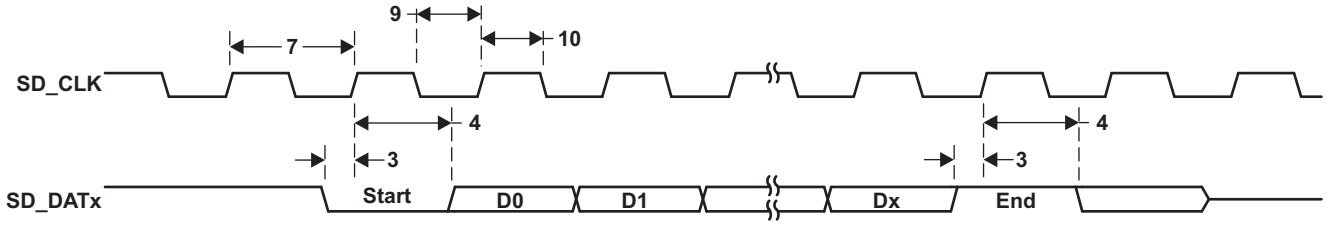

Figure 9-82. SD Host Read and Card CRC Status Timing

Copyright © 2010–2015, Texas Instruments Incorporated

9.17 Serial ATA Controller (SATA)

The Serial ATA (SATA) peripheral provides a direct interface for up to two hard disk drives (SATA) and supports the following features:

- Serial ATA 1.5 Gbps and 3 Gbps speeds
- Integrated PHY
- Integrated Rx and Tx data buffers
- Supports all SATA power management features
- Hardware-assisted native command queuing (NCQ) for up to 32 entries
- Supports port multiplier with command-based switching for connection to multiple hard disk drives
- Activity LED support.

For more detailed information on the SATA, see the SATA chapter in the *AM389x Sitara ARM Processors Technical Reference Manual* (literature number SPRUGX7).

9.17.1 SATA Interface Design Specifications

NOTE

For more information on PCB layout, see the *DM816xx Easy CYG Package PCB Escape Routing* application report (literature number SPRABK6).

This section provides PCB design and layout specifications for the SATA interface. The design rules constrain PCB trace length, PCB trace skew, signal integrity, cross-talk, and signal timing. Simulation and system design work has been done to ensure the SATA interface requirements are met.

A standard 100-MHz differential clock source must be used for SATA operation (for details, see Section 8.3.2).

9.17.1.1 SATA Interface Schematic

Figure 9-83 shows the data portion of the SATA interface schematic. The specific pin numbers can be obtained from Table 4-17, *Serial ATA Terminal Functions*.

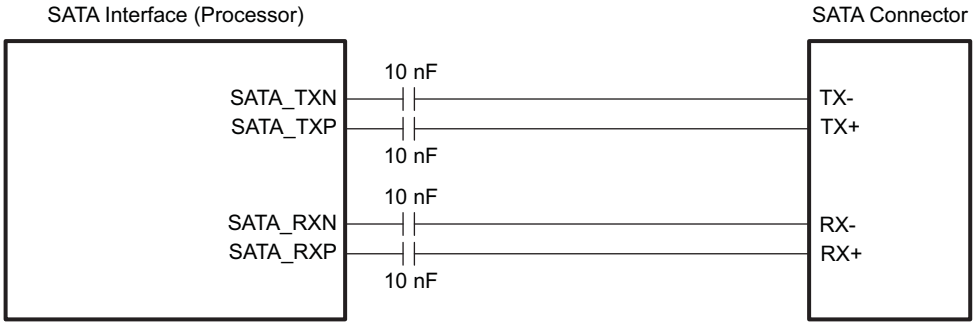

Figure 9-83. SATA Interface High-Level Schematic

9.17.1.2 Compatible SATA Components and Modes

Table 9-95 shows the compatible SATA components and supported modes. Note that the only supported configuration is an internal cable from the processor host to the SATA device.

Table 9-95. SATA Supported Modes

PARAMETER	MIN	MAX	UNIT	SUPPORTED
Transfer Rates	1.5	3.0	Gbps	
eSATA	-	-	-	No

Table 9-95. SATA Supported Modes (continued)

PARAMETER	MIN	MAX	UNIT	SUPPORTED
xSATA	-	-	-	No
Backplane	-	-	-	No
Internal Cable	-	-	-	Yes

9.17.1.3 PCB Stackup Specifications

Table 9-96 shows the PCB stackup and feature sizes required for SATA.

Table 9-96. SATA PCB Stackup Specifications

PARAMETER	MIN	TYP	MAX	UNIT
PCB routing and plane layers	4	6	-	Layers
Signal routing layers	2	3	-	Layers
Number of ground plane cuts allowed within SATA routing region	-	-	0	Cuts
Number of layers between SATA routing region and reference ground plane	-	-	0	Layers
PCB trace width, w	-	4	-	Mils
PCB BGA escape via pad size	-	20	-	Mils
PCB BGA escape via hole size	-	10		Mils
Processor BGA pad size (1)		0.3		mm

(1) NSMD pad, per IPC-7351A BGA pad size guideline.

9.17.1.4 Routing Specifications

The SATA data signal traces must be routed to achieve 100 Ω (±20%) differential impedance and 60 Ω (±15%) single-ended impedance. The single-ended impedance is required because differential signals are extremely difficult to closely couple on PCBs and, therefore, single-ended impedance becomes important. 60 Ω is chosen for the single-ended impedance to minimize problems caused by too low an impedance.

These impedances are impacted by trace width, trace spacing, distance to reference planes, and dielectric material. Verify with a PCB design tool that the trace geometry for both data signal pairs results in as close to 100 Ω differential impedance and 60 Ω single-ended impedance traces as possible. For best accuracy, work with your PCB fabricator to ensure this impedance is met.

Table 9-97 shows the routing specifications for the SATA data signals.

Table 9-97. SATA Routing Specifications

PARAMETER	MIN	TYP	MAX	UNIT
Processor-to-SATA header trace length			10 (1)	Inches
Number of stubs allowed on SATA traces (2)			0	Stubs
TX and RX pair differential impedance	80	100	120	Ω
TX and RX single-ended impedance	51	60	69	Ω
Number of vias on each SATA trace			3	Vias (3)
SATA differential pair to any other trace spacing	2*DS (4)			

(1) Beyond this, signal integrity may suffer.
(2) In-line pads may be used for probing.
(3) Vias must be used in pairs with their distance minimized.
(4) DS = differential spacing of the SATA traces.

Copyright © 2010–2015, Texas Instruments Incorporated

9.17.1.5 Coupling Capacitors

AC coupling capacitors are required on the receive data pair. Table 9-98 shows the requirements for these capacitors.

Table 9-98. SATA AC Coupling Capacitors Requirements

PARAMETER	MIN	TYP	MAX	UNIT
SATA AC coupling capacitor value	1	10	12	nF
SATA AC coupling capacitor package size (1)		0402	0603	EIA (2)

(1) The physical size of the capacitor should be as small as practical. Use the same size on both lines in each pair, placed side by side.
(2) EIA LxW units; for example, a 0402 is a 40x20 mil surface-mount capacitor.

9.17.2 SATA Peripheral Register Descriptions

Table 9-99. SATA Registers

HEX ADDRESS	ACRONYM	REGISTER NAME
0x4A14 0000	CAP	HBA Capabilities
0x4A14 0004	GHC	Global HBA Control
0x4A14 0008	IS	Interrupt Status
0x4A14 000C	PI	Ports Implemented
0x4A14 0010	VS	AHCI Version
0x4A14 0014	CCC_CTL	Command Completion Coalescing Control
0x4A14 0018	CCC_PORTS	Command Completion Coalescing Ports
0x4A14 001C - 0x4A14 009C	-	Reserved
0x4A14 00A0	BISTAFR	BIST Active FIS
0x4A14 00A4	BISTCR	BIST Control
0x4A14 00A8	BISTFCTR	BIST FIS Count
0x4A14 00AC	BISTSR	BIST Status
0x4A14 00B0	BISTDECR	BIST DWORD Error Count
0x4A14 00B4 - 0x4A14 00DF	-	Reserved
0x4A14 00E0	TIMER1MS	BIST DWORD Error Count
0x4A14 00E4	-	Reserved
0x4A14 00E8	GPARAM1R	Global Parameter 1
0x4A14 00EC	GPARAM2R	Global Parameter 2
0x4A14 00F0	PPARAMR	Port Parameter
0x4A14 00F4	TESTR	Test
0x4A14 00F8	VERSIONR	Version
0x4A14 00FC	IDR (PID)	ID
0x4A14 0100	P0CLB	Port 0 Command List Base Address
0x4A14 0104	-	Reserved
0x4A14 0108	P0FB	Port 0 FIS Base Address
0x4A14 010C	-	Reserved
0x4A14 0110	P0IS	Port 0 Interrupt Status
0x4A14 0114	P0IE	Port 0 Interrupt Enable
0x4A14 0118	P0CMD	Port 0 Command
0x4A14 011C	-	Reserved
0x4A14 0120	P0TFD	Port 0 Task File Data
0x4A14 0124	P0SIG	Port 0 Signature
0x4A14 0128	P0SSTS	Port 0 Serial ATA Status (SStatus)
0x4A14 012C	P0SCTL	Port 0 Serial ATA Control (SControl)
0x4A14 0130	P0SERR	Port 0 Serial ATA Error (SError)

Copyright © 2010–2015, Texas Instruments Incorporated

Table 9-99. SATA Registers (continued)

HEX ADDRESS	ACRONYM	REGISTER NAME
0x4A14 0134	P0SACT	Port 0 Serial ATA Active (SActive)
0x4A14 0138	P0CI	Port 0 Command Issue
0x4A14 013C	P0SNTF	Port 0 Serial ATA Notification
0x4A14 0140 - 0x4A14 016C	-	Reserved
0x4A14 0170	P0DMACR	Port 0 DMA Control
0x4A14 0174	-	Reserved
0x4A14 0178	P0PHYCR	Port 0 PHY Control
0x4A14 017C	P0PHYSR	Port 0 PHY Status
0x4A14 0180	P1CLB	Port 1 Command List Base Address
0x4A14 0184	-	Reserved
0x4A14 0188	P1FB	Port 1 FIS Base Address
0x4A14 018C	-	Reserved
0x4A14 0190	P1IS	Port 1 Interrupt Status
0x4A14 0194	P1IE	Port 1 Interrupt Enable
0x4A14 0198	P1CMD	Port 1 Command
0x4A14 019C	-	Reserved
0x4A14 01A0	P1TFD	Port 1 Task File Data
0x4A14 01A4	P1SIG	Port 1 Signature
0x4A14 01A8	P1SSTS	Port 1 Serial ATA Status (SStatus)
0x4A14 01AC	P1SCTL	Port 1 Serial ATA Control (SControl)
0x4A14 01B0	P1SERR	Port 1 Serial ATA Error (SError)
0x4A14 01B4	P1SACT	Port 1 Serial ATA Active (SActive)
0x4A14 01B8	P1CI	Port 1 Command Issue
0x4A14 01BC	P1SNTF	Port 1 Serial ATA Notification
0x4A14 01C0 - 0x4A14 01EC	-	Reserved
0x4A14 01F0	P1DMACR	Port 1 DMA Control
0x4A14 01F4	-	Reserved
0x4A14 01F8	P1PHYCR	Port 1 PHY Control
0x4A14 01FC	P1PHYSR	Port 1 PHY Status
0x4A14 1100	IDLE	Idle and Standby Modes
0x4A14 1104	PHYCFGR2	PHY Configuration 2

Copyright © 2010–2015, Texas Instruments Incorporated

9.18 Serial Peripheral Interface (SPI)

The SPI is a high-speed synchronous serial input and output port that allows a serial bit stream of programmed length (4 to 32 bits) to be shifted into and out of the device at a programmed bit-transfer rate. The SPI is normally used for communication between the device and external peripherals. Typical applications include an interface-to-external IO or peripheral expansion via devices such as shift registers, display drivers, SPI EEPROMs, and analog-to-digital converters (ADCs).

The SPI supports the following features:

- Master and slave operation
- Four chip selects for interfacing and control to up to four SPI slave devices and connection to a single external master
- 32-bit shift register
- Buffered receive and transmit data register per channel (1 word deep), FIFO size is 64 bytes
- Programmable SPI configuration per channel (clock definition, enable polarity and word width)
- Supports one interrupt request and two DMA requests per channel.

For more detailed information on the SPI, see the SPI chapter in the *AM389x Sitara ARM Processors Technical Reference Manual* (literature number SPRUGX7).

9.18.1 SPI Peripheral Register Descriptions

Table 9-100. SPI Registers

HEX ADDRESS	ACRONYM	REGISTER NAME
0x4803 0000 - 0x4803 010C	-	RESERVED
0x4803 0110	MCSPI_SYSCONFIG	SYSTEM CONFIGURATION
0x4803 0114	MCSPI_SYSSTATUS	SYSTEM STATUS
0x4803 0118	MCSPI_IRQSTATUS	INTERRUPT STATUS
0x4803 011C	MCSPI_IRQENABLE	INTERRUPT ENABLE
0x4803 0120	-	RESERVED
0x4803 0124	MCSPI_SYST	SYSTEM TEST
0x4803 0128	MCSPI_MODULCTRL	MODULE CONTROL
0x4803 012C	MCSPI_CH0CONF	CHANNEL 0 CONFIGURATION
0x4803 0130	MCSPI_CH0STAT	CHANNEL 0 STATUS
0x4803 0134	MCSPI_CH0CTRL	CHANNEL 0 CONTROL
0x4803 0138	MCSPI_TX0	CHANNEL 0 TRANSMITTER
0x4803 013C	MCSPI_RX0	CHANNEL 0 RECEIVER
0x4803 0140	MCSPI_CH1CONF	CHANNEL 1 CONFIGURATION
0x4803 0144	MCSPI_CH1STAT	CHANNEL 1 STATUS
0x4803 0148	MCSPI_CH1CTRL	CHANNEL 1 CONTROL
0x4803 014C	MCSPI_TX1	CHANNEL 1 TRANSMITTER
0x4803 0150	MCSPI_RX1	CHANNEL 1 RECEIVER
0x4803 0154	MCSPI_CH2CONF	CHANNEL 2 CONFIGURATION
0x4803 0158	MCSPI_CH2STAT	CHANNEL 2 STATUS
0x4803 015C	MCSPI_CH2CTRL	CHANNEL 2 CONTROL
0x4803 0160	MCSPI_TX2	CHANNEL 2 TRANSMITTER
0x4803 0164	MCSPI_RX2	CHANNEL 2 RECEIVER
0x4803 0168	MCSPI_CH3CONF	CHANNEL 3 CONFIGURATION
0x4803 016C	MCSPI_CH3STAT	CHANNEL 3 STATUS
0x4803 0170	MCSPI_CH3CTRL	CHANNEL 3 CONTROL
0x4803 0174	MCSPI_TX3	CHANNEL 3 TRANSMITTER
0x4803 0178	MCSPI_RX3	CHANNEL 3 RECEIVER

Copyright © 2010–2015, Texas Instruments Incorporated

Table 9-100. SPI Registers (continued)

HEX ADDRESS	ACRONYM	REGISTER NAME
0x4803 017C	MCSPI_XFERLEVEL	TRANSFER LEVELS
0x4803 0180 - 0x4803 01FF	-	RESERVED

Copyright © 2010–2015, Texas Instruments Incorporated

9.18.2 SPI Electrical Data and Timing

Table 9-101. Timing Requirements for SPI - Master Mode

(see Figure 9-84 and Figure 9-85)

NO.				MIN	MAX	UNIT
MASTER: 1 LOAD AT A MAXIMUM OF 5 pF						
1	$t_{c(SPICLK)}$	Cycle time, SPI_CLK(1)(2)		20.8(3)		ns
2	$t_{w(SPICLKL)}$	Pulse duration, SPI_CLK low(1)		0.5*P - 1(4)		ns
3	$t_{w(SPICLKH)}$	Pulse duration, SPI_CLK high(1)		0.5*P - 1(4)		ns
4	$t_{su(MISO-SPICLK)}$	Setup time, SPI_D[x] valid before SPI_CLK active edge(1)		2.29		ns
5	$t_{h(SPICLK-MISO)}$	Hold time, SPI_D[x] valid after SPI_CLK active edge(1)		2.67		ns
6	$t_{d(SPICLK-MOSI)}$	Delay time, SPI_CLK active edge to SPI_D[x] transition(1)		-3.57	3.57	ns
7	$t_{d(SCS-MOSI)}$	Delay time, $\overline{\text{SPI_SCS[x]}}$ active edge to SPI_D[x] transition			3.57	ns
8	$t_{d(SCS-SPICLK)}$	Delay time, $\overline{\text{SPI_SCS[x]}}$ active to SPI_CLK first edge(1)	MASTER_PHA0(5)	B-4.2(6)		ns
			MASTER_PHA1(5)	A-4.2(7)		ns
9	$t_{d(SPICLK-SCS)}$	Delay time, SPI_CLK last edge to $\overline{\text{SPI_SCS[x]}}$ inactive(1)	MASTER_PHA0(5)	A-4.2(7)		ns
			MASTER_PHA1(5)	B-4.2(6)		ns
MASTER: UP TO 4 LOADS AT A MAXIMUM TOTAL OF 25 pF						
1	$t_{c(SPICLK)}$	Cycle time, SPI_CLK(1)(2)		41.7(8)		ns
2	$t_{w(SPICLKL)}$	Pulse duration, SPI_CLK low(1)		0.5*P - 2(4)		ns
3	$t_{w(SPICLKH)}$	Pulse duration, SPI_CLK high(1)		0.5*P - 2(4)		ns
4	$t_{su(MISO-SPICLK)}$	Setup time, SPI_D[x] valid before SPI_CLK active edge(1)		3.02		ns
5	$t_{h(SPICLK-MISO)}$	Hold time, SPI_D[x] valid after SPI_CLK active edge(1)		2.76		ns
6	$t_{d(SPICLK-MOSI)}$	Delay time, SPI_CLK active edge to SPI_D[x] transition(1)		-4.62	4.62	ns
7	$t_{d(SCS-MOSI)}$	Delay time, $\overline{\text{SPI_SCS[x]}}$ active edge to SPI_D[x] transition			4.62	ns
8	$t_{d(SCS-SPICLK)}$	Delay time, $\overline{\text{SPI_SCS[x]}}$ active to SPI_CLK first edge(1)	MASTER_PHA0(5)	B-2.54(6)		ns
			MASTER_PHA1(5)	A-2.54(7)		ns
9	$t_{d(SPICLK-SCS)}$	Delay time, SPI_CLK last edge to $\overline{\text{SPI_SCS[x]}}$ inactive(1)	MASTER_PHA0(5)	A-2.54(7)		ns
			MASTER_PHA1(5)	B-2.54(6)		ns

(1) This timing applies to all configurations regardless of SPI_CLK polarity and which clock edges are used to drive output data and capture input data.
(2) Related to the SPI_CLK maximum frequency.
(3) Maximum frequency = 48 MHz
(4) P = SPICLK period.
(5) SPI_CLK phase is programmable with the PHA bit of the SPI_CH(i)CONF register.
(6) B = (TCS + 0.5) * TSPICLKREF * F_{ratio}, where TCS is a bit field of the SPI_CH(i)CONF register and F_{ratio} = Even ≥2.
(7) When P = 20.8 ns, A = (TCS + 1) * TSPICLKREF, where TCS is a bit field of the SPI_CH(i)CONF register. When P > 20.8 ns, A = (TCS + 0.5) * F_{ratio} * TSPICLKREF, where TCS is a bit field of the SPI_CH(i)CONF register.
(8) Maximum frequency = 24 MHz

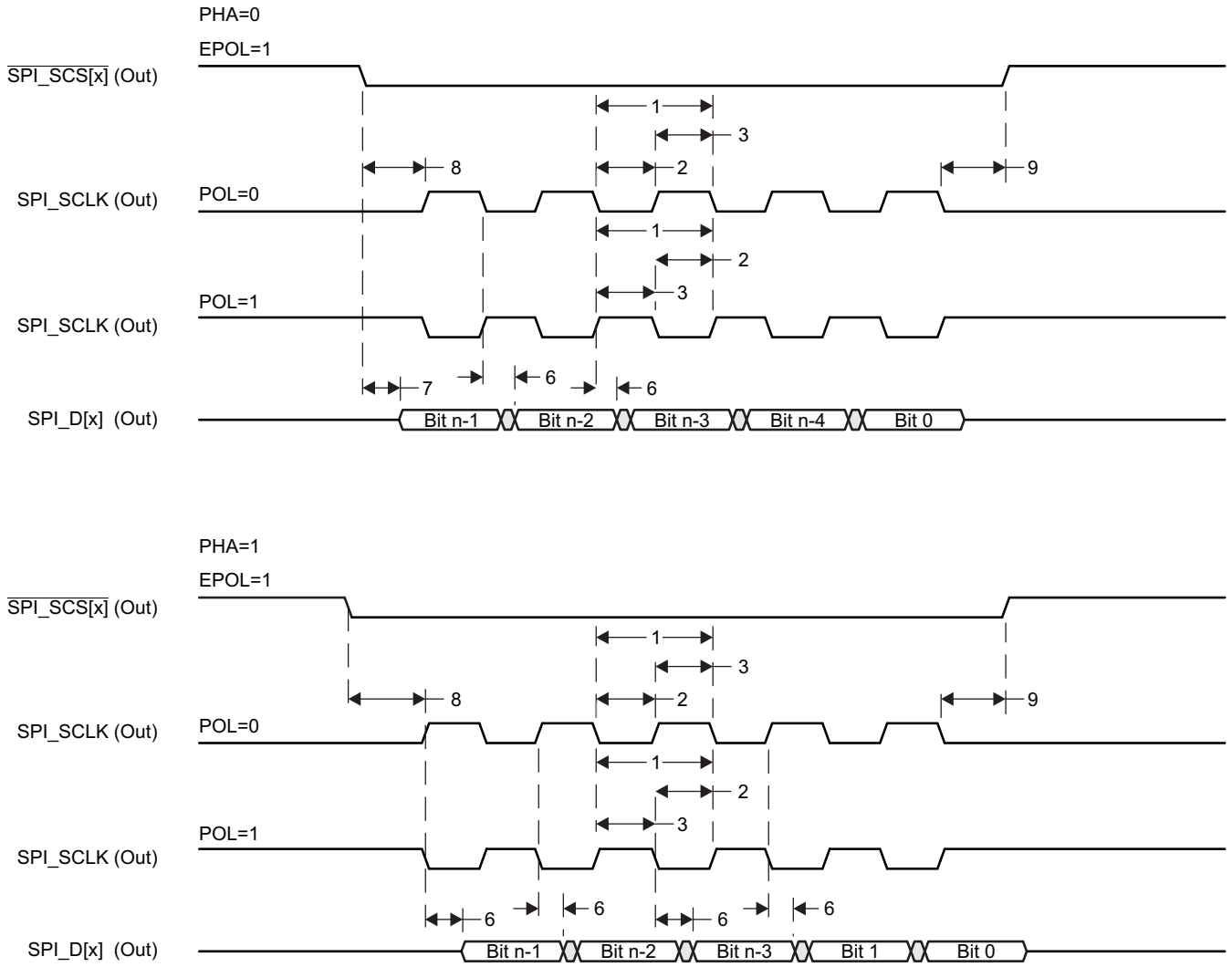

Figure 9-84. SPI Master Mode Transmit Timing

Copyright © 2010–2015, Texas Instruments Incorporated

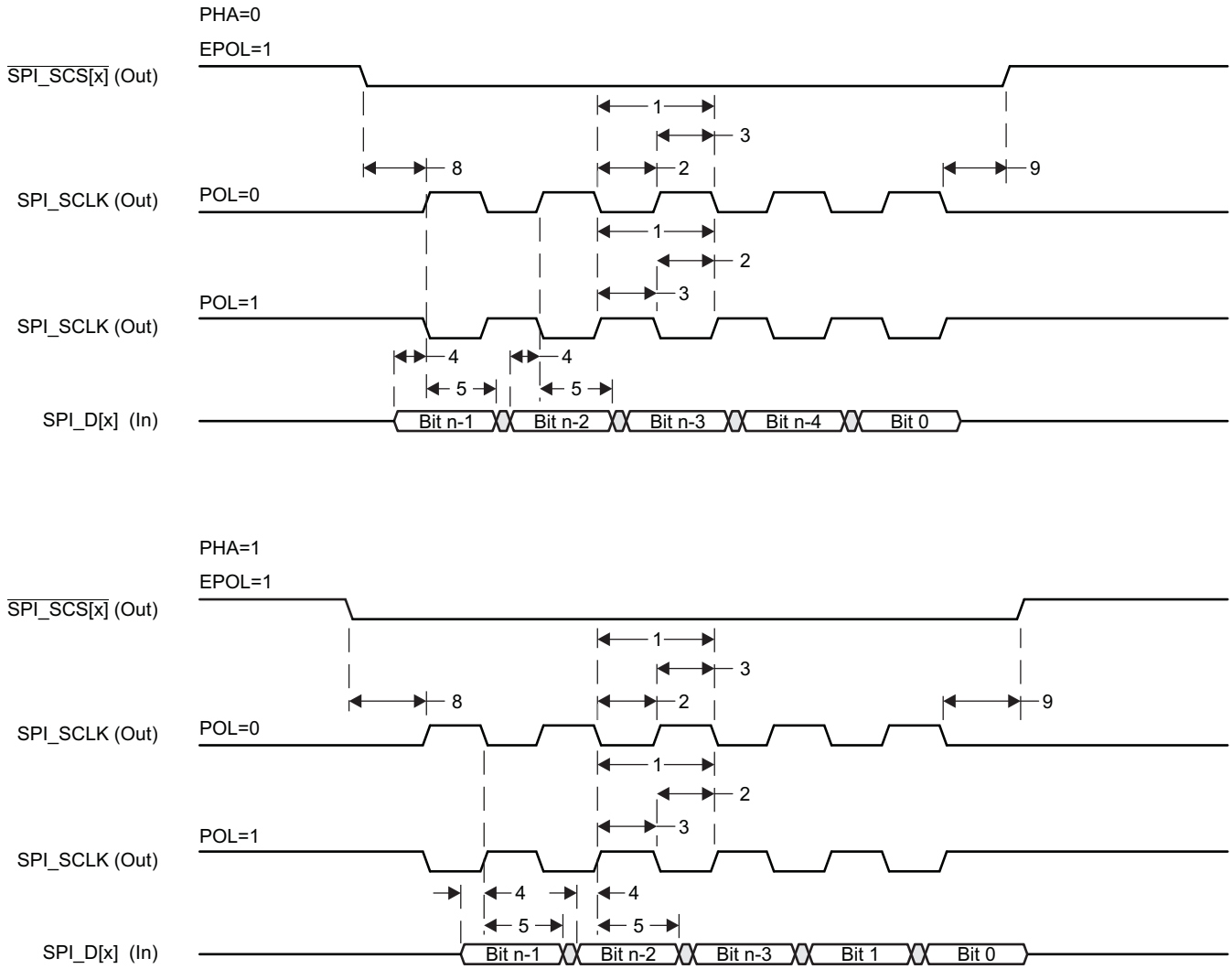

Figure 9-85. SPI Master Mode Receive Timing

Table 9-102. Timing Requirements for SPI - Slave Mode

(see Figure 9-86 and Figure 9-87)

NO.			MIN	MAX	UNIT
1	$t_{c(SPICLK)}$	Cycle time, SPI_CLK (1) (2)	62.5 (3)		ns
2	$t_{w(SPICLKL)}$	Pulse duration, SPI_CLK low (1)	0.5*P - 3 (4)		ns
3	$t_{w(SPICLKH)}$	Pulse duration, SPI_CLK high (1)	0.5*P - 3 (4)		ns
4	$t_{su(MOSI-SPICLK)}$	Setup time, SPI_D[x] valid before SPI_CLK active edge (1)	12.92		ns
5	$t_{h(SPICLK-MOSI)}$	Hold time, SPI_D[x] valid after SPI_CLK active edge (1)	12.92		ns
6	$t_{d(SPICLK-MISO)}$	Delay time, SPI_CLK active edge to SPI_D[x] transition (1)	-4.00	17.1	ns
7	$t_{d(SCS-MISO)}$	Delay time, $\overline{\text{SPI_SCS[x]}}$ active edge to SPI_D[x] transition (5)		17.1	ns
8	$t_{su(SCS-SPICLK)}$	Setup time, $\overline{\text{SPI_SCS[x]}}$ valid before SPI_CLK first edge (1)	12.92		ns
9	$t_{h(SPICLK-SCS)}$	Hold time, $\overline{\text{SPI_SCS[x]}}$ valid after SPI_CLK last edge (1)	12.92		ns

(1) This timing applies to all configurations regardless of SPI_CLK polarity and which clock edges are used to drive output data and capture input data.
(2) Related to the input maximum frequency supported by the SPI module.
(3) Maximum frequency = 16 MHz
(4) P = SPICLK period.
(5) PHA = 0; SPI_CLK phase is programmable with the PHA bit of the SPI_CH(i)CONF register.

Copyright © 2010–2015, Texas Instruments Incorporated

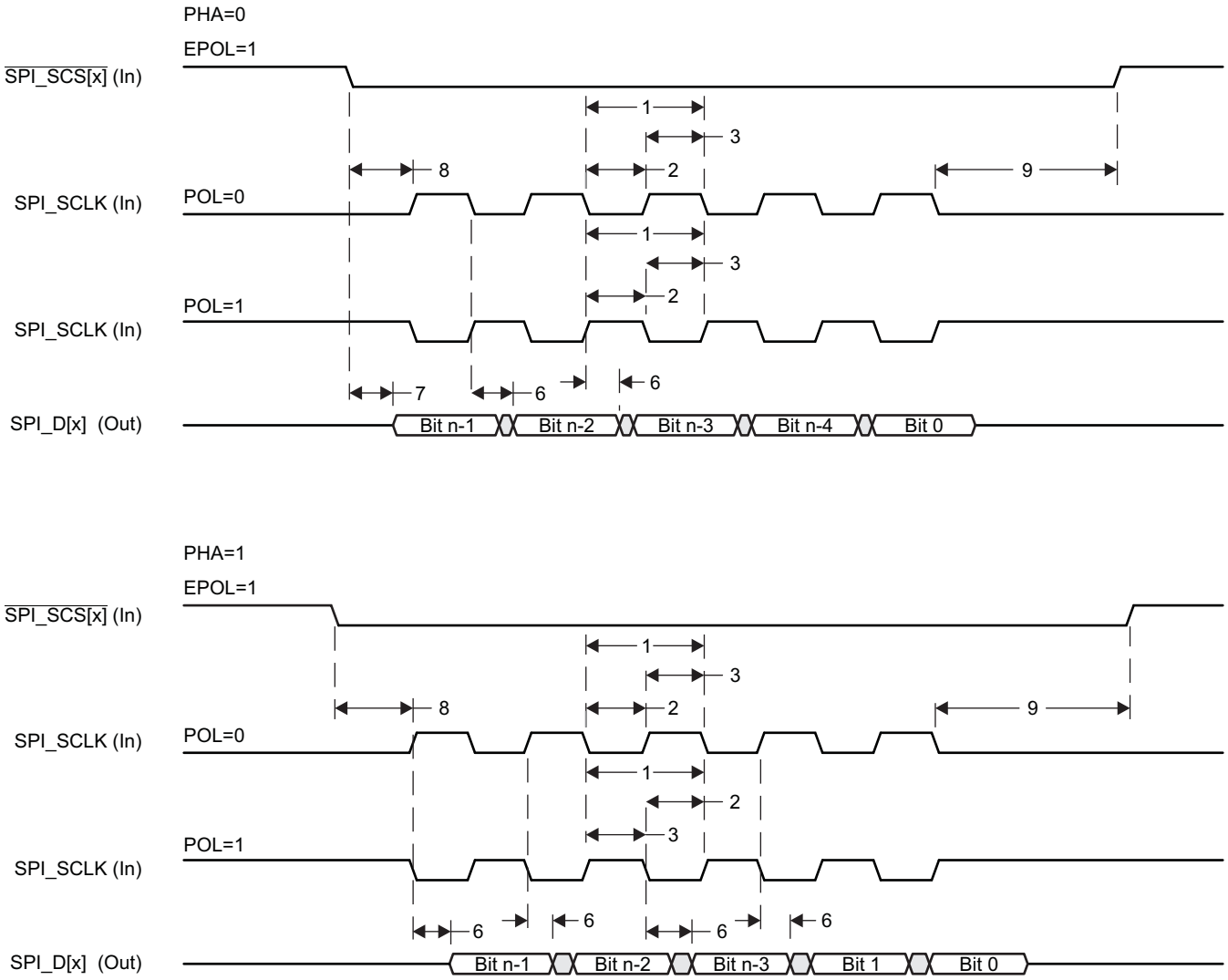

Figure 9-86. SPI Slave Mode Transmit Timing

Copyright © 2010–2015, Texas Instruments Incorporated

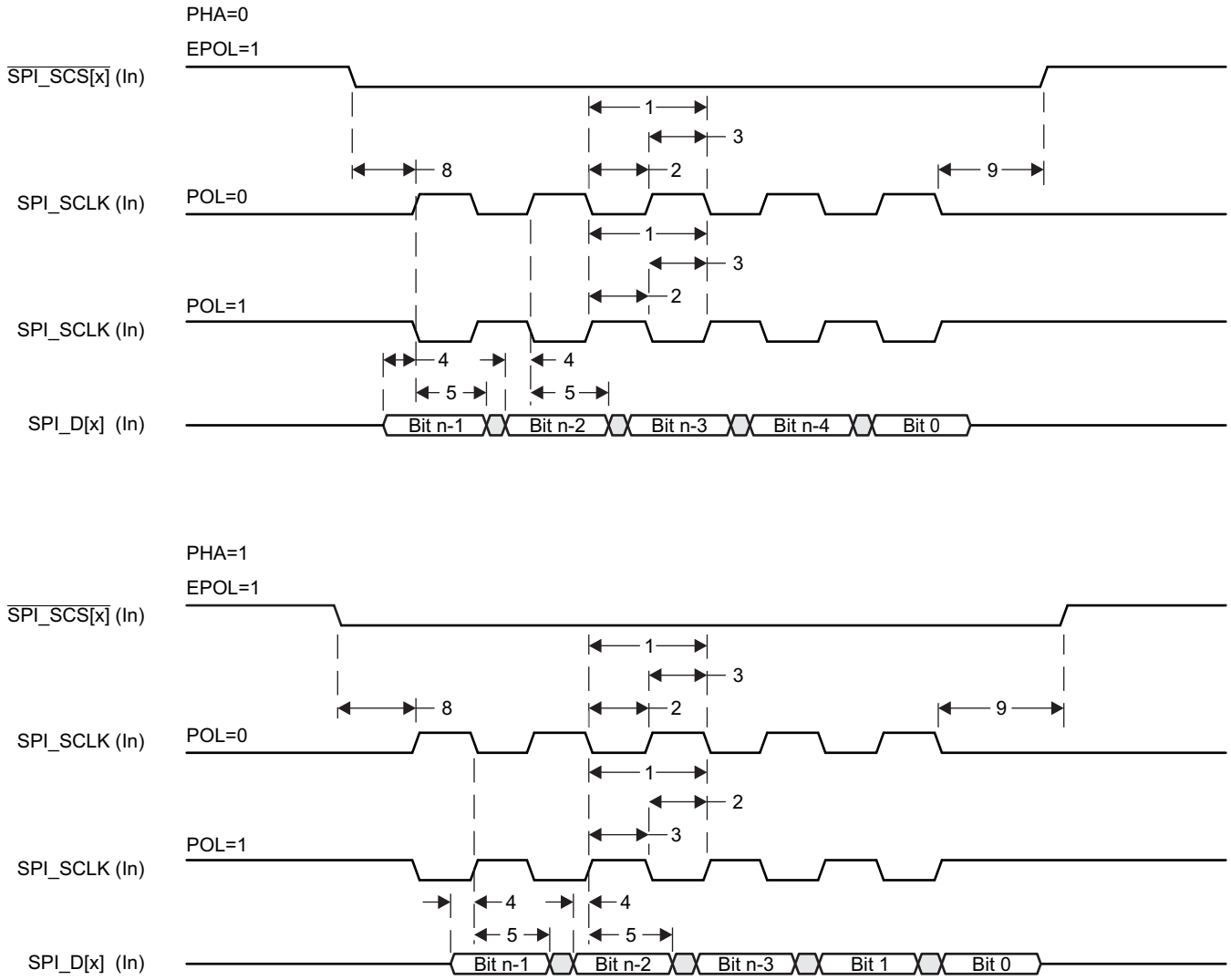

Figure 9-87. SPI Slave Mode Receive Timing

9.19 Timers

The device has seven 32-bit general-purpose (GP) timers that have the following features:

- Timers 1-3 are for software use and do not have an external connection
- Dedicated input trigger for capture mode and dedicated output trigger or pulse width modulation (PWM) signal
- Interrupts generated on overflow, compare, and capture
- Free-running 32-bit upward counter
- Supported modes:
  - Compare and capture modes
  - Auto-reload mode
  - Start-stop mode
- Timer[7:1] functional clock is sourced from either the 27-MHz system clock, 32.768-kHz RTC clock or the TCLKIN external timer input clock, as selected within the PRCM
- On-the-fly read and write register (while counting)
- Generates interrupts to the ARM CPUs.

The device has one system watchdog timer that has the following features:

- Free-running 32-bit upward counter
- On-the-fly read and write register (while counting)
- Reset upon occurrence of a timer overflow condition
- Two possible clock sources:
  - Internal 32.768-kHz clock derived from 27-MHz system clock.
  - External clock input on the CLKIN32 input pin.

The watchdog timer is used to provide a recovery mechanism for the device in the event of a fault condition, such as a non-exiting code loop.

For more detailed information, see the Timers chapter in the *AM389x Sitara ARM Processors Technical Reference Manual* (literature number SPRUGX7).

9.19.1 Timer Peripheral Register Descriptions

Table 9-103. Timer1-7 Registers(1)

TIMER1 HEX ADDRESS	TIMER2 HEX ADDRESS	TIMER3 HEX ADDRESS	TIMER4 HEX ADDRESS	TIMER5 HEX ADDRESS	TIMER6 HEX ADDRESS	TIMER7 HEX ADDRESS	ACRONYM	REGISTER NAME
0x4802 E000	0x4804 0000	0x4804 2000	0x4804 4000	0x4804 6000	0x4804 8000	0x4804 A000	TIDR	Identification
0x4802 E010	0x4804 0010	0x4804 2010	0x4804 4010	0x4804 6010	0x4804 8010	0x4804 A010	TIOCP_CFG	Timer OCP Configuration
0x4802 E020	0x4804 0020	0x4804 2020	0x4804 4020	0x4804 6020	0x4804 8020	0x4804 A020	IRQ_EOI	Timer IRQ End-Of-Interrupt
0x4802 E024	0x4804 0024	0x4804 2024	0x4804 4024	0x4804 6024	0x4804 8024	0x4804 A024	IRQSTATUS_RAW	Timer IRQSTATUS Raw
0x4802 E028	0x4804 0028	0x4804 2028	0x4804 4028	0x4804 6028	0x4804 8028	0x4804 A028	IRQSTATUS	Timer IRQSTATUS
0x4802 E02C	0x4804 002C	0x4804 202C	0x4804 402C	0x4804 602C	0x4804 802C	0x4804 A02C	IRQSTATUS_SET	Timer IRQENABLE Set
0x4802 E030	0x4804 0030	0x4804 2030	0x4804 4030	0x4804 6030	0x4804 8030	0x4804 A030	IRQSTATUS_CLR	Timer IRQENABLE Clear
0x4802 E034	0x4804 0034	0x4804 2034	0x4804 4034	0x4804 6034	0x4804 8034	0x4804 A034	IRQWAKEEN	Timer IRQ Wakeup Enable
0x4802 E038	0x4804 0038	0x4804 2038	0x4804 4038	0x4804 6038	0x4804 8038	0x4804 A038	TCLR	Timer Control
0x4802 E03C	0x4804 003C	0x4804 203C	0x4804 403C	0x4804 603C	0x4804 803C	0x4804 A03C	TCRR	Timer Counter
0x4802 E040	0x4804 0040	0x4804 2040	0x4804 4040	0x4804 6040	0x4804 8040	0x4804 A040	TLDR	Timer Load
0x4802 E044	0x4804 0044	0x4804 2044	0x4804 4044	0x4804 6044	0x4804 8044	0x4804 A044	TTGR	Timer Trigger

(1) All Timer registers are: 32-bit register accessible in 16-bit mode and use little-endian addressing.

Copyright © 2010–2015, Texas Instruments Incorporated

Table 9-103. Timer1-7 Registers[(1)] (continued)

TIMER1 HEX ADDRESS	TIMER2 HEX ADDRESS	TIMER3 HEX ADDRESS	TIMER4 HEX ADDRESS	TIMER5 HEX ADDRESS	TIMER6 HEX ADDRESS	TIMER7 HEX ADDRESS	ACRONYM	REGISTER NAME
0x4802 E048	0x4804 0048	0x4804 2048	0x4804 4048	0x4804 6048	0x4804 8048	0x4804 A048	TWPS	Timer Write Posted Status
0x4802 E04C	0x4804 004C	0x4804 204C	0x4804 404C	0x4804 604C	0x4804 804C	0x4804 A04C	TMAR	Timer Match
0x4802 E050	0x4804 0050	0x4804 2050	0x4804 4050	0x4804 6050	0x4804 8050	0x4804 A050	TCAR1	Timer Capture
0x4802 E054	0x4804 0054	0x4804 2054	0x4804 4054	0x4804 6054	0x4804 8054	0x4804 A054	TSICR	Timer Synchronous Interface Control
0x4802 E058	0x4804 0058	0x4804 2058	0x4804 4058	0x4804 6058	0x4804 8058	0x4804 A058	TCAR2	Timer Capture

Table 9-104. Watchdog Timer Registers

HEX ADDRESS	ACRONYM	REGISTER NAME
0x480C 2000	WIDR	IP Revision Identifier
0x480C 2010	WDSC	OCP interface parameters
0x480C 2014	WDST	Status information
0x480C 2018	WISR	Interrupt events pending
0x480C 201C	WIER	Interrupt events control
0x480C 2020	WWER	Wakeup events control
0x480C 2024	WCLR	Counter prescaler control
0x480C 2028	WCRR	Internal counter value
0x480C 202C	WLDR	Timer load value
0x480C 2030	WTGR	Watchdog counter reload
0x480C 2034	WWPS	Write posting bits
0x480C 2044	WDLY	Event detection delay value
0x480C 2048	WSPR	Start-stop value
0x480C 2050	WIRQEOI	Software End Of Interrupt
0x480C 2054	WIRQSTATRAW	IRQ unmasked status
0x480C 2058	WIRQSTAT	IRQ masked status
0x480C 205C	WIRQENSET	IRQ enable
0x480C 2060	WIRQENCLR	IRQ enable clear
0x480C 2064	WIRQWAKEEN	IRQ wakeup events control

Copyright © 2010–2015, Texas Instruments Incorporated

9.19.2 Timer Electrical Data and Timing

Table 9-105. Timing Requirements for Timer

(see Figure 9-88)

NO.			MIN	MAX	UNIT
1	$t_{w(EVTIH)}$	Pulse duration, high	4P[(1)]		ns
2	$t_{w(EVTIL)}$	Pulse duration, low	4P[(1)]		ns

(1) P = module clock.

Table 9-106. Switching Characteristics Over Recommended Operating Conditions for Timer

(see Figure 9-88)

NO.	PARAMETER		MIN	MAX	UNIT
3	$t_{w(EVTOH)}$	Pulse duration, high	4P-3[(1)]		ns
4	$t_{w(EVTOL)}$	Pulse duration, low	4P-3[(1)]		ns

(1) P = module clock.

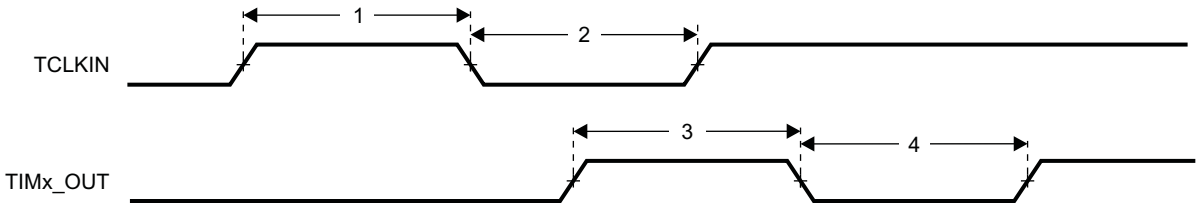

Figure 9-88. Timer Timing

Copyright © 2010–2015, Texas Instruments Incorporated

9.20 Universal Asynchronous Receiver and Transmitter (UART)

The UART performs serial-to-parallel conversions on data received from a peripheral device and parallel-to-serial conversion on data received from the CPU. The device provides up to three UART peripheral interfaces, depending on the selected pin multiplexing.

Each UART has the following features:

- Selectable UART, IrDA (SIR, MIR) and CIR modes
- Dual 64-entry FIFOs for received and transmitted data payload
- Programmable and selectable transmit and receive FIFO trigger levels for DMA and interrupt generation
- Baud-rate generation based upon programmable divisors N (N=1…16384)
- Two DMA requests and one interrupt request to the system
- Can connect to any RS-232 compliant device.

UART functions include:

- Baud-rate up to 3.6 Mbps
- Programmable serial interfaces characteristics
  - 5, 6, 7, or 8-bit characters
  - Even, odd, or no parity-bit generation and detection
  - 1, 1.5, or 2 stop-bit generation
  - Flow control: hardware (RTS and CTS) or software (XON and XOFF)
- Additional modem control functions (UART0_DTR, UART0_DSR, UART0_DCD, and UART0_RIN) for UART0 only; UART1 and UART2 do not support full-flow control signaling.

IR-IrDA functions include:

- Support of IrDA 1.4 slow infrared (SIR, baud-rate up to 115.2 Kbps), medium infrared (MIR, baud-rate up to 1.152 Mbps) and fast infrared (FIR baud-rate up to 4.0 Mbps) communications
- Supports framing error, cyclic redundancy check (CRC) error, illegal symbol (FIR), and abort pattern (SIR, MIR) detection
- 8-entry status FIFO (with selectable trigger levels) available to monitor frame length and frame errors.

IR-CIR functions include:

- Consumer infrared (CIR) remote control mode with programmable data encoding
- Free data format (supports any remote control private standards)
- Selectable bit rate and configurable carrier frequency.

For more detailed information on the UART peripheral, see the UART chapter in the *AM389x Sitara ARM Processors Technical Reference Manual* (literature number SPRUGX7).

9.20.1 UART Peripheral Register Descriptions

Table 9-107 lists the UART register name summary. Table 9-108 shows the UART registers along with their configuration requirements.

Table 9-107. UART Register Summary

ACRONYM	REGISTER NAME	ACRONYM	REGISTER NAME
RHR	Receive Holding	RXFLH	Receive Frame Length High
THR	Transmit Holding	BLR	BOF Control
IER	Interrupt Enable	ACREG	Auxilliary Control
IIR	Interrupt Identification	SCR	Supplementary Control
FCR	FIFO Control	SSR	Supplementary Status
LCR	Line Control	EBLR	BOF Length
MCR	Modem Control	MVR	Module Version
LSR	Line Status	SYSC	System Configuration
MSR	Modem Status	SYSS	System Status
SPR	Scratchpad	WER	Wake-up Enable
TCR	Transmission Control	CFPS	Carrier Frequency Prescaler
TLR	Trigger Level	DLL	Divisor Latch Low
MDR1	Mode Definition 1	DLH	Divisor Latch High
MDR2	Mode Definition 2	UASR	UART Autobauding Status
SFLSR	Status FIFO Line Status	EFR	Enhanced Feature
RESUME	Resume	XON1	UART XON1 Character
SFREGL	Status FIFO Low	XON2	UART XON2 Character
SFREGH	Status FIFO High	XOFF1	UART XOFF1 Character
TXFLL	Transmit Frame Length Low	XOFF2	UART XOFF2 Character
TXFLH	Transmit Frame Length High	ADDR1	IrDA Address 1
RXFLL	Receive Frame Length Low	ADDR2	IrDA Address 2

Table 9-108. UART Registers Configuration Requirements(1)(2)(3)

UART0 HEX ADDRESS	UART1 HEX ADDRESS	UART2 HEX ADDRESS	REGISTER					
			LCR[7] = 0		LCR[7] = 1 and LCR[7:0] ≠ 0xBF		LCR[7:0] = 0xBF	
			READ	WRITE	READ	WRITE	READ	WRITE
0x4802 0000	0x4802 2000	0x4802 4000	RHR	THR	DLL	DLL	DLL	DLL
0x4802 0004	0x4802 2004	0x4802 4004	IER	IER	DLH	DLH	DLH	DLH
0x4802 0008	0x4802 2008	0x4802 4008	IIR	FCR	IIR	FCR	EFR	EFR
0x4802 000C	0x4802 200C	0x4802 400C	LCR	LCR	LCR	LCR	LCR	LCR
0x4802 0010	0x4802 2010	0x4802 4010	MCR	MCR	MCR	MCR	XON1 or ADDR1	XON1 or ADDR1
0x4802 0014	0x4802 2014	0x4802 4014	LSR	-	LSR	-	XON2 or ADDR2	XON2 or ADDR2
0x4802 0018	0x4802 2018	0x4802 4018	MSR or TCR	TCR	MSR or TCR	TCR	XOFF1 or TCR	XOFF1 or TCR
0x4802 001C	0x4802 201C	0x4802 401C	SPR orTLR	SPR orTLR	SPR or TLR	SPR orTLR	XOFF2 or TLR	XOFF2 or TLR
0x4802 0020	0x4802 2020	0x4802 4020	MDR1	MDR1	MDR1	MDR1	MDR1	MDR1
0x4802 0024	0x4802 2024	0x4802 4024	MDR2	MDR2	MDR2	MDR2	MDR2	MDR2
0x4802 0028	0x4802 2028	0x4802 4028	SFLSR	TXFLL	SFLSR	TXFLL	SFLSR	TXFLL

(1) The transmission control register (TCR) and the trigger level register (TLR) are accessible only when EFR[4]=1 and MCR[6]=1.
(2) MCR[7:5] and FCR[5:4] can only be written when EFR[4]=1.
(3) In UART modes, IER[7:4] can only be written when EFR[4]=1. In IrDA and CIR modes, EFR[4] has no impact on the access to IER[7:4].

Copyright © 2010–2015, Texas Instruments Incorporated

Table 9-108. UART Registers Configuration Requirements[(1)(2)(3)] (continued)

UART0 HEX ADDRESS	UART1 HEX ADDRESS	UART2 HEX ADDRESS	REGISTER					
			LCR[7] = 0		LCR[7] = 1 and LCR[7:0] ≠ 0xBF		LCR[7:0] = 0xBF	
			READ	WRITE	READ	WRITE	READ	WRITE
0x4802 002C	0x4802 202C	0x4802 402C	RESUME	TXFLH	RESUME	TXFLH	RESUME	TXFLH
0x4802 0030	0x4802 2030	0x4802 4030	SFREGL	RXFLL	SFREGL	RXFLL	SFREGL	RXFLL
0x4802 0034	0x4802 2034	0x4802 4034	SFREGH	RXFLH	SFREGH	RXFLH	SFREGH	RXFLH
0x4802 0038	0x4802 2038	0x4802 4038	BLR	BLR	UASR	-	UASR	-
0x4802 003C	0x4802 203C	0x4802 403C	ACREG	ACREG	-	-	-	-
0x4802 0040	0x4802 2040	0x4802 4040	SCR	SCR	SCR	SCR	SCR	SCR
0x4802 0044	0x4802 2044	0x4802 4044	SSR	SSR[2]	SSR	SSR[2]	SSR	SSR[2]
0x4802 0048	0x4802 2048	0x4802 4048	EBLR	EBLR	-	-	-	-
0x4802 004C	0x4802 204C	0x4802 404C	-	-	-	-	-	-
0x4802 0050	0x4802 2050	0x4802 4050	MVR	-	MVR	-	MVR	-
0x4802 0054	0x4802 2054	0x4802 4054	SYSC	SYSC	SYSC	SYSC	SYSC	SYSC
0x4802 0058	0x4802 2058	0x4802 4058	SYSS		SYSS		SYSS	
0x4802 005C	0x4802 205C	0x4802 405C	WER	WER	WER	WER	WER	WER
0x4802 0060	0x4802 2060	0x4802 4060	CFPS	CFPS	CFPS	CFPS	CFPS	CFPS
0x4802 0064 - 0x4802 00C4	0x4802 2064 - 0x4802 20C4	0x4802 4064 - 0x4802 40C4	-	-	-	-	-	-

9.20.2 UART Electrical Data and Timing

Table 9-109. Timing Requirements for UART

(see Figure 9-89)

NO.			MIN	MAX	UNIT
4	$t_{w(RX)}$	Pulse width, receive data bit, 15 pF, 30 pF, 100 pF high or low	0.96U (1)	1.05U (1)	ns
5	$t_{w(CTS)}$	Pulse width, receive start bit, 15 pF, 30 pF, 100 pF high or low	0.96U (1)	1.05U (1)	ns
	$t_{d(RTS-TX)}$	Delay time, transmit start bit to transmit data	P (2)		ns
	$t_{d(CTS-TX)}$	Delay time, receive start bit to transmit data	P (2)		ns

(1) U = UART baud time = 1/programmed baud rate.
(2) P = clock period of the reference clock (FCLK, usually 48 MHz).

Table 9-110. Switching Characteristics Over Recommended Operating Conditions for UART

(see Figure 9-89)

NO.	PARAMETER			MIN	MAX	UNIT
	$f_{(baud)}$	Maximum programmable baud rate	15 pF		5	MHz
			30 pF		0.23	
			100 pF		0.115	
2	$t_{w(TX)}$	Pulse width, transmit data bit, 15 pF, 30 pF, 100 pF high or low		U - 2 (1)	U + 2 (1)	ns
3	$t_{w(RTS)}$	Pulse width, transmit start bit, 15 pF, 30 pF, 100 pF high or low		U - 2 (1)	U + 2 (1)	ns

(1) U = UART baud time = 1/programmed baud rate.

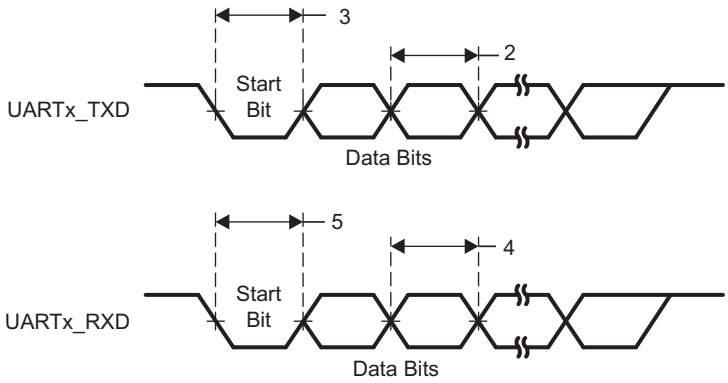

Figure 9-89. UART Timing

Copyright © 2010–2015, Texas Instruments Incorporated

9.21 Universal Serial Bus (USB2.0)

The device includes two USB2.0 modules which support the Universal Serial Bus Specification Revision 2.0. The following are some of the major USB features that are supported:

- USB 2.0 peripheral at high speed (HS: 480 Mbps) and full speed (FS: 12 Mbps)
- USB 2.0 host at HS, FS, and low speed (LS: 1.5 Mbps)
- Each endpoint (other than endpoint 0, control only) can support all transfer modes (control, bulk, interrupt, and isochronous)
- Supports high-bandwidth ISO mode
- Supports 16 Transmit (TX) and 16 Receive (RX) endpoints including endpoint 0
- FIFO RAM - 32K endpoint - Programmable size
- Includes two integrated PHYs; requires a low-jitter 24-MHz source clock for its PLL
- RNDIS-like mode for terminating RNDIS-type protocols without using short-packet termination for support of MSC applications.

The USB2.0 modules do not support the following features:

- On-chip charge pump (VBUS power must be generated external to the device)
- RNDIS mode acceleration for USB sizes that are not multiples of 64 bytes
- Endpoint max USB packet sizes that do not conform to the USB2.0 spec (for FS and LS: 8, 16, 32, 64, and 1023 are defined; for HS: 64, 128, 512, and 1024 are defined).

For more detailed information on the USB2.0 peripheral, see the USB2.0 chapter in the *AM389x Sitara ARM Processors Technical Reference Manual* (literature number SPRUGX7). For detailed information on USB board design and layout guidelines, see the *USB 2.0 Board Design and Layout Guidelines* application report (literature number SPRAAR7). For general information on PCB layout, see the *DM816xx Easy CYG Package PCB Escape Routing* application report (literature number SPRABK6).

9.21.1 USB2.0 Peripheral Register Descriptions

Table 9-111. USB2.0 Submodules

SUBMODULE ADDRESS OFFSET	SUBMODULE NAME
0x0000	USBSS registers
0x1000	USB0 controller registers
0x1800	USB1 controller registers
0x2000	CPPI DMA controller registers
0x3000	CPPI DMA scheduler registers
0x4000	CPPI DMA Queue Manager registers

Table 9-112. USB Subsystem (USBSS) Registers (1)

HEX ADDRESS	ACRONYM	REGISTER NAME
0x4740 0000	REVREG	USBSS REVISION
0x4740 0004 - 0x4740 000C	-	Reserved
0x4740 0010	SYSCONFIG	USBSS SYSCONFIG
0x4740 0014 - 0x4740 001C	-	Reserved
0x4740 0020	EOI	USBSS IRQ_EOI
0x4740 0024	IRQSTATRAW	USBSS IRQ_STATUS_RAW
0x4740 0028	IRQSTAT	USBSS IRQ_STATUS
0x4740 002C	IRQENABLER	USBSS IRQ_ENABLE_SET

(1) USBSS registers contain the registers that are used to control at the global level and apply to all submodules.

Table 9-112. USB Subsystem (USBSS) Registers[(1)] (continued)

HEX ADDRESS	ACRONYM	REGISTER NAME
0x4740 0030	IRQCLEARR	USBSS IRQ_ENABLE_CLR
0x4740 0034 - 0x4740 00FC	-	Reserved
0x4740 0100	IRQDMATHOLDTX00	USBSS IRQ_DMA_THRESHOLD_TX0_0
0x4740 0104	IRQDMATHOLDTX01	USBSS IRQ_DMA_THRESHOLD_TX0_1
0x4740 0108	IRQDMATHOLDTX02	USBSS IRQ_DMA_THRESHOLD_TX0_2
0x4740 010C	IRQDMATHOLDTX03	USBSS IRQ_DMA_THRESHOLD_TX0_3
0x4740 0110	IRQDMATHOLDRX00	USBSS IRQ_DMA_THRESHOLD_RX0_0
0x4740 0114	IRQDMATHOLDRX01	USBSS IRQ_DMA_THRESHOLD_RX0_1
0x4740 0118	IRQDMATHOLDRX02	USBSS IRQ_DMA_THRESHOLD_RX0_2
0x4740 011C	IRQDMATHOLDRX03	USBSS IRQ_DMA_THRESHOLD_RX0_3
0x4740 0120	IRQDMATHOLDTX10	USBSS IRQ_DMA_THRESHOLD_TX1_0
0x4740 0124	IRQDMATHOLDTX11	USBSS IRQ_DMA_THRESHOLD_TX1_1
0x4740 0128	IRQDMATHOLDTX12	USBSS IRQ_DMA_THRESHOLD_TX1_2
0x4740 012C	IRQDMATHOLDTX13	USBSS IRQ_DMA_THRESHOLD_TX1_3
0x4740 0130	IRQDMATHOLDRX10	USBSS IRQ_DMA_THRESHOLD_RX1_0
0x4740 0134	IRQDMATHOLDRX11	USBSS IRQ_DMA_THRESHOLD_RX1_1
0x4740 0138	IRQDMATHOLDRX12	USBSS IRQ_DMA_THRESHOLD_RX1_2
0x4740 013C	IRQDMATHOLDRX13	USBSS IRQ_DMA_THRESHOLD_RX1_3
0x4740 0140	IRQDMAENABLE0	USBSS IRQ_DMA_ENABLE_0
0x4740 0144	IRQDMAENABLE1	USBSS IRQ_DMA_ENABLE_1
0x4740 0148 - 0x4740 01FC	-	Reserved
0x4740 0200	IRQFRAMETHOLDTX00	USBSS IRQ_FRAME_THRESHOLD_TX0_0
0x4740 0204	IRQFRAMETHOLDTX01	USBSS IRQ_FRAME_THRESHOLD_TX0_1
0x4740 0208	IRQFRAMETHOLDTX02	USBSS IRQ_FRAME_THRESHOLD_TX0_2
0x4740 020C	IRQFRAMETHOLDTX03	USBSS IRQ_FRAME_THRESHOLD_TX0_3
0x4740 0210	IRQFRAMETHOLDRX00	USBSS IRQ_FRAME_THRESHOLD_RX0_0
0x4740 0214	IRQFRAMETHOLDRX01	USBSS IRQ_FRAME_THRESHOLD_RX0_1
0x4740 0218	IRQFRAMETHOLDRX02	USBSS IRQ_FRAME_THRESHOLD_RX0_2
0x4740 021C	IRQFRAMETHOLDRX03	USBSS IRQ_FRAME_THRESHOLD_RX0_3
0x4740 0220	IRQFRAMETHOLDTX10	USBSS IRQ_FRAME_THRESHOLD_TX1_0
0x4740 0224	IRQFRAMETHOLDTX11	USBSS IRQ_FRAME_THRESHOLD_TX1_1
0x4740 0228	IRQFRAMETHOLDTX12	USBSS IRQ_FRAME_THRESHOLD_TX1_2
0x4740 022C	IRQFRAMETHOLDTX13	USBSS IRQ_FRAME_THRESHOLD_TX1_3
0x4740 0230	IRQFRAMETHOLDRX10	USBSS IRQ_FRAME_THRESHOLD_RX1_0
0x4740 0234	IRQFRAMETHOLDRX11	USBSS IRQ_FRAME_THRESHOLD_RX1_1
0x4740 0238	IRQFRAMETHOLDRX12	USBSS IRQ_FRAME_THRESHOLD_RX1_2
0x4740 023C	IRQFRAMETHOLDRX13	USBSS IRQ_FRAME_THRESHOLD_RX1_3
0x4740 0240	IRQFRAMEENABLE0	USBSS IRQ_FRAME_ENABLE_0
0x4740 0244	IRQFRAMEENABLE1	USBSS IRQ_FRAME_ENABLE_1
0x4740 0248 - 0x4740 0FFC	-	Reserved

Table 9-113. USB0 Controller Registers

HEX ADDRESS	ACRONYM	REGISTER NAME
0x4740 1000	USB0REV	USB0 REVISION
0x4740 1004 - 0x4740 1010	-	Reserved
0x4740 1014	USB0CTRL	USB0 Control
0x4740 1018	USB0STAT	USB0 Status

Copyright © 2010–2015, Texas Instruments Incorporated

Table 9-113. USB0 Controller Registers (continued)

HEX ADDRESS	ACRONYM	REGISTER NAME
0x4740 101C	-	Reserved
0x4740 1020	USB0IRQMSTAT	USB0 IRQ_MERGED_STATUS
0x4740 1024	USB0IRQEOI	USB0 IRQ_EOI
0x4740 1028	USB0IRQSTATRAW0	USB0 IRQ_STATUS_RAW_0
0x4740 102C	USB0IRQSTATRAW1	USB0 IRQ_STATUS_RAW_1
0x4740 1030	USB0IRQSTAT0	USB0 IRQ_STATUS_0
0x4740 1034	USB0IRQSTAT1	USB0 IRQ_STATUS_1
0x4740 1038	USB0IRQENABLESET0	USB0 IRQ_ENABLE_SET_0
0x4740 103C	USB0IRQENABLESET1	USB0 IRQ_ENABLE_SET_1
0x4740 1040	USB0IRQENABLECLR0	USB0 IRQ_ENABLE_CLR_0
0x4740 1044	USB0IRQENABLECLR1	USB0 IRQ_ENABLE_CLR_1
0x4740 1048 - 0x4740 106C	-	Reserved
0x4740 1070	USB0TXMODE	USB0 Tx Mode
0x4740 1074	USB0RXMODE	USB0 Rx Mode
0x4740 1078 - 0x4740 107C	-	Reserved
0x4740 1080	USB0GENRNDISEP1	USB0 Generic RNDIS Size EP1
0x4740 1084	USB0GENRNDISEP2	USB0 Generic RNDIS Size EP2
0x4740 1088	USB0GENRNDISEP3	USB0 Generic RNDIS Size EP3
0x4740 108C	USB0GENRNDISEP4	USB0 Generic RNDIS Size EP4
0x4740 1090	USB0GENRNDISEP5	USB0 Generic RNDIS Size EP5
0x4740 1094	USB0GENRNDISEP6	USB0 Generic RNDIS Size EP6
0x4740 1098	USB0GENRNDISEP7	USB0 Generic RNDIS Size EP7
0x4740 109C	USB0GENRNDISEP8	USB0 Generic RNDIS Size EP8
0x4740 10A0	USB0GENRNDISEP9	USB0 Generic RNDIS Size EP9
0x4740 10A4	USB0GENRNDISEP10	USB0 Generic RNDIS Size EP10
0x4740 10A8	USB0GENRNDISEP11	USB0 Generic RNDIS Size EP11
0x4740 10AC	USB0GENRNDISEP12	USB0 Generic RNDIS Size EP12
0x4740 10B0	USB0GENRNDISEP13	USB0 Generic RNDIS Size EP13
0x4740 10B4	USB0GENRNDISEP14	USB0 Generic RNDIS Size EP14
0x4740 10B8	USB0GENRNDISEP15	USB0 Generic RNDIS Size EP15
0x4740 10BC - 0x4740 10CC	-	Reserved
0x4740 10D0	USB0AUTOREQ	USB0 Auto Req
0x4740 10D4	USB0SRPFIXTIME	USB0 SRP Fix Time
0x4740 10D8	USB0TDOWN	USB0 Teardown
0x4740 10DC	-	Reserved
0x4740 10E0	USB0UTMI	USB0 PHY UTMI
0x4740 10E4	USB0UTMILB	USB0 MGC UTMI Loopback
0x4740 10E8	USB0MODE	USB0 Mode
0x4740 10E8 - 0x4740 13FF	-	Reserved
0x4740 1400 - 0x4740 159C	-	USB0 Mentor Core Registers
0x4740 15A0 - 0x4740 17FC	-	Reserved

Table 9-114. USB1 Controller Registers

HEX ADDRESS	ACRONYM	REGISTER NAME
0x4740 1800	USB1REV	USB1 Revision
0x4740 1804 - 0x4740 1810	-	Reserved
0x4740 1814	USB1CTRL	USB1 Control

Table 9-114. USB1 Controller Registers (continued)

HEX ADDRESS	ACRONYM	REGISTER NAME
0x4740 1818	USB1STAT	USB1 Status
0x4740 181C	-	Reserved
0x4740 1820	USB1IRQMSTAT	USB1 IRQ_MERGED_STATUS
0x4740 1824	USB1IRQEOI	USB1 IRQ_EOI
0x4740 1828	USB1IRQSTATRAW0	USB1 IRQ_STATUS_RAW_0
0x4740 182C	USB1IRQSTATRAW1	USB1 IRQ_STATUS_RAW_1
0x4740 1830	USB1IRQSTAT0	USB1 IRQ_STATUS_0
0x4740 1834	USB1IRQSTAT1	USB1 IRQ_STATUS_1
0x4740 1838	USB1IRQENABLESET0	USB1 IRQ_ENABLE_SET_0
0x4740 183C	USB1IRQENABLESET1	USB1 IRQ_ENABLE_SET_1
0x4740 1840	USB1IRQENABLECLR0	USB1 IRQ_ENABLE_CLR_0
0x4740 1844	USB1IRQENABLECLR1	USB1 IRQ_ENABLE_CLR_1
0x4740 1848 - 0x4740 186C	-	Reserved
0x4740 1870	USB1TXMODE	USB1 Tx Mode
0x4740 1874	USB1RXMODE	USB1 Rx Mode
0x4740 1878 - 0x4740 187C	-	Reserved
0x4740 1880	USB1GENRNDISEP1	USB1 Generic RNDIS Size EP1
0x4740 1884	USB1GENRNDISEP2	USB1 Generic RNDIS Size EP2
0x4740 1888	USB1GENRNDISEP3	USB1 Generic RNDIS Size EP3
0x4740 188C	USB1GENRNDISEP4	USB1 Generic RNDIS Size EP4
0x4740 1890	USB1GENRNDISEP5	USB1 Generic RNDIS Size EP5
0x4740 1894	USB1GENRNDISEP6	USB1 Generic RNDIS Size EP6
0x4740 1898	USB1GENRNDISEP7	USB1 Generic RNDIS Size EP7
0x4740 189C	USB1GENRNDISEP8	USB1 Generic RNDIS Size EP8
0x4740 18A0	USB1GENRNDISEP9	USB1 Generic RNDIS Size EP9
0x4740 18A4	USB1GENRNDISEP10	USB1 Generic RNDIS Size EP10
0x4740 18A8	USB1GENRNDISEP11	USB1 Generic RNDIS Size EP11
0x4740 18AC	USB1GENRNDISEP12	USB1 Generic RNDIS Size EP12
0x4740 18B0	USB1GENRNDISEP13	USB1 Generic RNDIS Size EP13
0x4740 18B4	USB1GENRNDISEP14	USB1 Generic RNDIS Size EP14
0x4740 18B8	USB1GENRNDISEP15	USB1 Generic RNDIS Size EP15
0x4740 18BC - 0x4740 18CC	-	Reserved
0x4740 18D0	USB1AUTOREQ	USB1 Auto Req
0x4740 18D4	USB1SRPFIXTIME	USB1 SRP Fix Time
0x4740 18D8	USB1TDOWN	USB1 Teardown
0x4740 18DC	-	Reserved
0x4740 18E0	USB1UTMI	USB1 PHY UTMI
0x4740 18E4	USB1UTMILB	USB1 MGC UTMI Loopback
0x4740 18E8	USB1MODE	USB1 Mode
0x4740 18E8 - 0x4740 1BFF	-	Reserved
0x4740 1C00 - 0x4740 1D9C	-	USB1 Mentor Core Registers
0x4740 1DA0 - 0x4740 1FFC	-	Reserved

Table 9-115. CPPI DMA Controller Registers

HEX ADDRESS	ACRONYM	REGISTER NAME
0x4740 2000	DMAREVID	Revision
0x4740 2004	TDFDQ	Teardown Free Descriptor Queue Control

Copyright © 2010–2015, Texas Instruments Incorporated

Table 9-115. CPPI DMA Controller Registers (continued)

HEX ADDRESS	ACRONYM	REGISTER NAME
0x4740 2008	DMAEMU	Emulation Control
0x4740 2010	DMAMEM1BA	CPPI Mem1 Base Address
0x4740 2014	DMAMEM1MASK	CPPI Mem1 Mask Address
0x4740 200C - 0x4740 27FF	-	Reserved
0x4740 2800	TXGCR0	Tx Channel 0 Global Configuration
0x4740 2804	-	Reserved
0x4740 2808	RXGCR0	Rx Channel 0 Global Configuration
0x4740 280C	RXHPCRA0	Rx Channel 0 Host Packet Configuration A
0x4740 2810	RXHPCRB0	Rx Channel 0 Host Packet Configuration B
0x4740 2814 - 0x4740 281C	-	Reserved
0x4740 2820	TXGCR1	Tx Channel 1 Global Configuration
0x4740 2824	-	Reserved
0x4740 2828	RXGCR1	Rx Channel 1 Global Configuration
0x4740 282C	RXHPCRA1	Rx Channel 1 Host Packet Configuration A
0x4740 2830	RXHPCRB1	Rx Channel 1 Host Packet Configuration B
0x4740 2834 - 0x4740 283C	-	Reserved
0x4740 2840	TXGCR2	Tx Channel 2 Global Configuration
0x4740 2844	-	Reserved
0x4740 2848	RXGCR2	Rx Channel 2 Global Configuration
0x4740 284C	RXHPCRA2	Rx Channel 2 Host Packet Configuration A
0x4740 2850	RXHPCRB2	Rx Channel 2 Host Packet Configuration B
0x4740 2854 - 0x4740 285F	-	Reserved
0x4740 2860	TXGCR3	Tx Channel 3 Global Configuration
0x4740 2864	-	Reserved
0x4740 2868	RXGCR3	Rx Channel 3 Global Configuration
0x4740 286C	RXHPCRA3	Rx Channel 3 Host Packet Configuration A
0x4740 2870	RXHPCRB3	Rx Channel 3 Host Packet Configuration B
0x4740 2880 - 0x4740 2B9F	-	...
0x4740 2BA0	TXGCR29	Tx Channel 29 Global Configuration
0x4740 2BA4	-	Reserved
0x4740 2BA8	RXGCR29	Rx Channel 29 Global Configuration
0x4740 2BAC	RXHPCRA29	Rx Channel 29 Host Packet Configuration A
0x4740 2BB0	RXHPCRB29	Rx Channel 29 Host Packet Configuration B
0x4740 2BB4 - 0x4740 2FFF	-	Reserved

Table 9-116. CPPI DMA Scheduler Registers

HEX ADDRESS	ACRONYM	REGISTER NAME
0x4740 3000	DMA_SCHED_CTRL	CPPI DMA Scheduler Control Register
0x4740 3804 - 0x4740 38FF	-	Reserved
0x4740 3800	WORD0	CPPI DMA Scheduler Table Word 0
0x4740 3804	WORD1	CPPI DMA Scheduler Table Word 1
…	…	…
0x4740 38F8	WORD62	CPPI DMA Scheduler Table Word 62
0x4740 38FC	WORD63	CPPI DMA Scheduler Table Word 63
0x4740 38FF - 0x4740 3FFF	-	Reserved

Copyright © 2010–2015, Texas Instruments Incorporated

Table 9-117. CPPI DMA Queue Manager Registers

HEX ADDRESS	ACRONYM	REGISTER NAME
0x4740 4000	QMGRREVID	Queue Manager Revision
0x4740 4004	-	Reserved
0x4740 4008	DIVERSION	Queue Manager Queue Diversion
0x4740 4020	FDBSC0	Queue Manager Free Descriptor and Buffer Starvation Count 0
0x4740 4024	FDBSC1	Queue Manager Free Descriptor and Buffer Starvation Count 1
0x4740 4028	FDBSC2	Queue Manager Free Descriptor and Buffer Starvation Count 2
0x4740 402C	FDBSC3	Queue Manager Free Descriptor and Buffer Starvation Count 3
0x4740 4030	FDBSC4	Queue Manager Free Descriptor and Buffer Starvation Count 4
0x4740 4034	FDBSC5	Queue Manager Free Descriptor and Buffer Starvation Count 5
0x4740 4038	FDBSC6	Queue Manager Free Descriptor and Buffer Starvation Count 6
0x4740 403C	FDBSC7	Queue Manager Free Descriptor and Buffer Starvation Count 7
0x4740 4030 - 0x4740 407C	-	Reserved
0x4740 4080	LRAM0BASE	Queue Manager Linking RAM Region 0 Base Address
0x4740 4084	LRAM0SIZE	Queue Manager Linking RAM Region 0 Size
0x4740 4088	LRAM1BASE	Queue Manager Linking RAM Region 1 Base Address
0x4740 408C	-	Reserved
0x4740 4090	PEND0	Queue Manager Queue Pending 0
0x4740 4094	PEND1	Queue Manager Queue Pending 1
0x4740 4098	PEND2	Queue Manager Queue Pending 2
0x4740 409C	PEND3	Queue Manager Queue Pending 3
0x4740 40A0	PEND4	Queue Manager Queue Pending 4
0x4740 40A4 - 0x4740 4FFF	-	Reserved
0x4740 5000 + 16xR	QMEMRBASEr	Memory Region R Base Address (R ranges from 0 to 15)
0x4740 5000 + 16xR + 4	QMEMRCTRLr	Memory Region R Control (R ranges from 0 to 15)
0x4740 50F8 - 0x4740 5FFF	-	Reserved
0x4740 6000 + 16xN	CTRLAn	Queue N Register A (N ranges from 0 to 155)
0x4740 6004 + 16xN	CTRLBn	Queue N Register B (N ranges from 0 to 155)
0x4740 6008 + 16xN	CTRLCn	Queue N Register C (N ranges from 0 to 155)
0x4740 600C + 16xN	CTRLDn	Queue N Register D (N ranges from 0 to 155)
0x4740 69C0 - 0x4740 6FFF	-	Reserved
0x4740 7000 + 16xN	QSTATAn	Queue N Status A (N ranges from 0 to 155)
0x4740 7004 + 16xN	QSTATBn	Queue N Status B (N ranges from 0 to 155)
0x4740 7008 + 16xN	QSTATCn	Queue N Status C (N ranges from 0 to 155)
0x4740 700C + 16xN	-	Reserved
0x4740 79C0 - 0x4740 7FFF	-	Reserved

Copyright © 2010–2015, Texas Instruments Incorporated

9.21.2 USB2.0 Electrical Data and Timing

Table 9-118. Switching Characteristics Over Recommended Operating Conditions for USB2.0

(see Figure 9-90)

NO.	PARAMETER		LOW SPEED 1.5 Mbps		FULL SPEED 12 Mbps		HIGH SPEED 480 Mbps		UNIT
			MIN	MAX	MIN	MAX	MIN	MAX	
1	$t_{r(D)}$	Rise time, USB_DP and USB_DN signals (1)	75	300	4	20	0.5		ns
2	$t_{f(D)}$	Fall time, USB_DP and USB_DN signals (1)	75	300	4	20	0.5		ns
3	t_{rfM}	Rise and Fall time, matching (2)	80	125	90	111.11	–	–	%
4	V_{CRS}	Output signal cross-over voltage (1)	1.3	2	1.3	2	–	–	V
5	$t_{jr(source)NT}$	Source (Host) Driver jitter, next transition		2		2		(3)	ns
	$t_{jr(FUNC)NT}$	Function Driver jitter, next transition		25		2		(3)	ns
6	$t_{jr(source)PT}$	Source (Host) Driver jitter, paired transition (4)		1		1		(3)	ns
	$t_{jr(FUNC)PT}$	Function Driver jitter, paired transition		10		1		(3)	ns
7	$t_{w(EOPT)}$	Pulse duration, EOP transmitter	1250	1500	160	175	–	–	ns
8	$t_{w(EOPR)}$	Pulse duration, EOP receiver	670		82		–		ns
9	$t_{(DRATE)}$	Data Rate		1.5		12		480	Mb per s
10	Z_{DRV}	Driver Output Resistance	–	–	28	49.5	40.5	49.5	Ω
11	USB_R1	USB reference resistor	43.8	44.6	43.8	44.6	43.8	44.6	Ω

(1) Low Speed: C_L = 200 pF, Full Speed: C_L = 50 pF, High Speed: C_L = 50 pF
(2) $t_{RFM} = (t_r/t_f) \times 100$. [Excluding the first transaction from the Idle state.]
(3) For more detailed information, see the Universal Serial Bus Specification Revision 2.0, Chapter 7, *Electrical*.
(4) $t_{jr} = t_{px(1)} - t_{px(0)}$

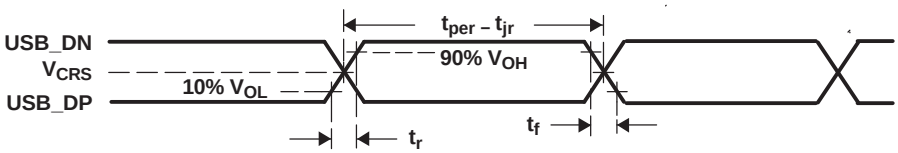

Figure 9-90. USB2.0 Integrated Transceiver Interface Timing

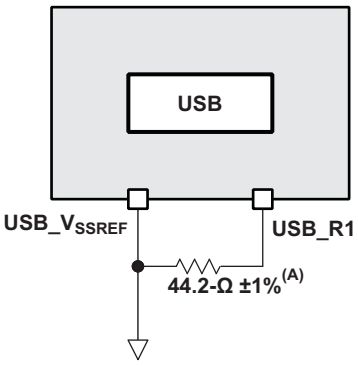

A. Place the 44.2-Ω ± 1% as close to the device as possible.

Figure 9-91. USB Reference Resistor Routing

10 Device and Documentation Support

10.1 Device Support

10.1.1 Development Support

TI offers an extensive line of development tools, including tools to evaluate the performance of the processors, generate code, develop algorithm implementations, and fully integrate and debug software and hardware modules. The tool's support documentation is electronically available within the Code Composer Studio™ Integrated Development Environment (IDE).

The following products support development of AM389x processor applications:

Software Development Tools: Code Composer Studio™ Integrated Development Environment (IDE): including Editor C/C++ and Assembly Code Generation, and Debug plus additional development tools Scalable, Real-Time Foundation Software , which provides the basic run-time target software needed to support any Sitara ARM Processor application.

Hardware Development Tools: Extended Development System (XDS™) Emulator

For a complete listing of development-support tools for the AM389x Sitara™ ARM Processor platform, visit the Texas Instruments website at www.ti.com. For information on pricing and availability, contact the nearest TI field sales office or authorized distributor.

10.1.2 Device and Development Support-Tool Nomenclature

To designate the stages in the product development cycle, TI assigns prefixes to the part numbers of all processors and support tools. Each device has one of three prefixes: X, P, or null (no prefix) (for example, AM3894CYG120). Texas Instruments recommends two of three possible prefix designators for its support tools: TMDX and TMDS. These prefixes represent evolutionary stages of product development from engineering prototypes (TMDX) through fully qualified production devices and tools (TMDS).

Device development evolutionary flow:

X Experimental device that is not necessarily representative of the final device's electrical specifications and may not use production assembly flow.

P Prototype device that is not necessarily the final silicon die and may not necessarily meet final electrical specifications.

null Production version of the silicon die that is fully qualified.

Support tool development evolutionary flow:

TMDX Development-support product that has not yet completed Texas Instruments internal qualification testing.

TMDS Fully-qualified development-support product.

X and P devices and TMDX development-support tools are shipped against the following disclaimer:

"Developmental product is intended for internal evaluation purposes."

Production devices and TMDS development-support tools have been characterized fully, and the quality and reliability of the device have been demonstrated fully. TI's standard warranty applies.

Predictions show that prototype devices (X or P) have a greater failure rate than the standard production devices. Texas Instruments recommends that these devices not be used in any production system because their expected end-use failure rate still is undefined. Only qualified production devices are to be used.

Copyright © 2010–2015, Texas Instruments Incorporated

TI device nomenclature also includes a suffix with the device family name. This suffix indicates the package type (for example, CYG), the temperature range (for example, blank is the default commercial operating junction temperature range), and the device speed range (for example, 120 is 930-MHz ARM). Figure 10-1 provides a legend for reading the complete device name for any AM389x device.

For device part numbers and further ordering information of AM389x devices in the CYG package type, see the TI website (www.ti.com) or contact your TI sales representative.

For additional description of the device nomenclature markings on the die, see the *AM389x Sitara ARM Processors Silicon Errata* (literature number SPRZ327).

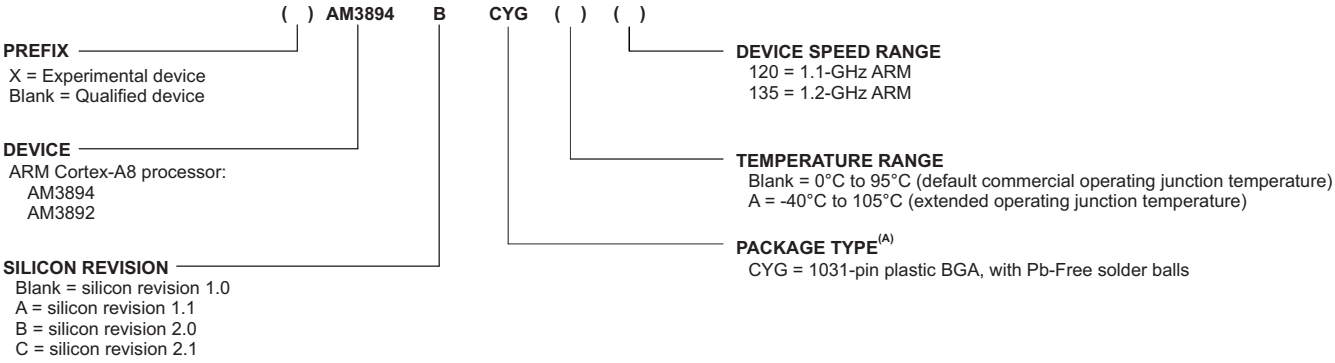

A. BGA = Ball-Grid Array.

Figure 10-1. Device Nomenclature

10.1.3 Device Speed Range Overview

Table 10-1 specifies all clock frequencies with respect to device speed range.

Table 10-1. Device Speed Ranges

PART NUMBER	CORTEX-A8 (MHz)	SGX530 (MHz)(1)	M3 (MHz)	DDR3 (MTps)	DDR2 (MTps)	EMIF (MHz)	DMM (MHz)
CYG120	1,200	300 (A8/4)	280	1,600	1,066	400	380
CYGA120							
CYG135	1,350	337.5 (A8/4)	300	1,600	1,066	400	450

(1) SGX530 is available only on the AM3894 device.

10.2 Documentation Support

The following documents describe the AM389x Sitara™ ARM Processors. Copies of these documents are available on the Internet at www.ti.com. Tip: Enter the literature number in the search box.

SPRUGX7 ***AM389x Sitara ARM Processors Technical Reference Manual*** details the integrations, the environment, the functional description, and the programming models for each peripheral and subsystem in the device.

SPRZ327 ***AM389x Sitara™ ARM® Microprocessors (MPUs)*** describes the usage notes and known exceptions to the functional specifications for the device.

SPRABK6 ***DM816xx Easy CYG Package PCB Escape Routing.***

10.3 Related Links

The table below lists quick access links. Categories include technical documents, support and community resources, tools and software, and quick access to sample or buy.

Table 10-2. Related Links

PARTS	PRODUCT FOLDER	SAMPLE & BUY	TECHNICAL DOCUMENTS	TOOLS & SOFTWARE	SUPPORT & COMMUNITY
AM3894	Click here	Click here	Click here	Click here	Click here
AM3892	Click here	Click here	Click here	Click here	Click here

10.4 Community Resources

The following links connect to TI community resources. Linked contents are provided "AS IS" by the respective contributors. They do not constitute TI specifications and do not necessarily reflect TI's views; see TI's Terms of Use.

TI E2E™ Online Community ***TI's Engineer-to-Engineer (E2E) Community.*** Created to foster collaboration among engineers. At e2e.ti.com, you can ask questions, share knowledge, explore ideas and help solve problems with fellow engineers.

TI Embedded Processors Wiki ***Texas Instruments Embedded Processors Wiki.*** Established to help developers get started with Embedded Processors from Texas Instruments and to foster innovation and growth of general knowledge about the hardware and software surrounding these devices.

10.5 Trademarks

Sitara, SmartReflex, Code Composer Studio, XDS, E2E are trademarks of Texas Instruments.
Cortex, NEON are trademarks of ARM Limited.
ARM is a registered trademark of ARM Limited (or its subsidiaries) in the EU and/or elsewhere. All rights reserved.
ARM, Jazelle are registered trademarks of ARM Limited.
Thumb is a registered trademark of ARM Ltd or its subsidiaries.
USSE is a trademark of Imagination Technologies Limited.
PowerVR is a registered trademark of Imagination Technologies Limited.
OpenVG, OpenMax are trademarks of Khronos, Group Inc..
OpenGL is a registered trademark of Khronos, Group Inc..
Microsoft, Windows are registered trademarks of Microsoft Corp.
Direct3D is a registered trademark of Microsoft.
I^2C bus is a registered trademark of NXP B.V. Corporation Netherlands.
PCI Express is a registered trademark of PCI-SIG.
Via Channel is a trademark of Via Technologies, Inc..

10.6 Electrostatic Discharge Caution

This integrated circuit can be damaged by ESD. Texas Instruments recommends that all integrated circuits be handled with appropriate precautions. Failure to observe proper handling and installation procedures can cause damage.

ESD damage can range from subtle performance degradation to complete device failure. Precision integrated circuits may be more susceptible to damage because very small parametric changes could cause the device not to meet its published specifications.

10.7 Glossary

SLYZ022 — *TI Glossary*.

This glossary lists and explains terms, acronyms, and definitions.

Copyright © 2010–2015, Texas Instruments Incorporated

11 Mechanical Packaging and Orderable Information

11.1 Packaging Information

The following pages include mechanical packaging and orderable information. This information is the most current data available for the designated devices. This data is subject to change without notice and revision of this document. For browser-based versions of this data sheet, refer to the left-hand navigation.

PACKAGING INFORMATION

Orderable Device	Status (1)	Package Type	Package Drawing	Pins	Package Qty	Eco Plan (2)	Lead finish/ Ball material (6)	MSL Peak Temp (3)	Op Temp (°C)	Device Marking (4/5)	Samples
AM3892CCYG120	LIFEBUY	FCBGA	CYG	1031	44	RoHS & Green	Call TI	Level-4-245C-72HR	0 to 95	AM3892CCYG 120	
AM3892CCYG135	ACTIVE	FCBGA	CYG	1031	44	RoHS & Green	Call TI	Level-4-245C-72HR	0 to 95	AM3892CCYG 135	Samples
AM3894CCYG120	ACTIVE	FCBGA	CYG	1031	44	RoHS & Green	Call TI	Level-4-245C-72HR	0 to 95	AM3894CCYG 120	Samples
AM3894CCYG135	LIFEBUY	FCBGA	CYG	1031	44	RoHS & Green	Call TI	Level-4-245C-72HR	0 to 95	AM3894CCYG 135	
AM3894CCYGA120	ACTIVE	FCBGA	CYG	1031	44	RoHS & Green	SNAGCU	Level-4-245C-72HR	-40 to 105	AM3894CCYG A120	Samples

(1) The marketing status values are defined as follows:
ACTIVE: Product device recommended for new designs.
LIFEBUY: TI has announced that the device will be discontinued, and a lifetime-buy period is in effect.
NRND: Not recommended for new designs. Device is in production to support existing customers, but TI does not recommend using this part in a new design.
PREVIEW: Device has been announced but is not in production. Samples may or may not be available.
OBSOLETE: TI has discontinued the production of the device.

(2) **RoHS:** TI defines "RoHS" to mean semiconductor products that are compliant with the current EU RoHS requirements for all 10 RoHS substances, including the requirement that RoHS substance do not exceed 0.1% by weight in homogeneous materials. Where designed to be soldered at high temperatures, "RoHS" products are suitable for use in specified lead-free processes. TI may reference these types of products as "Pb-Free".
RoHS Exempt: TI defines "RoHS Exempt" to mean products that contain lead but are compliant with EU RoHS pursuant to a specific EU RoHS exemption.
Green: TI defines "Green" to mean the content of Chlorine (Cl) and Bromine (Br) based flame retardants meet JS709B low halogen requirements of <=1000ppm threshold. Antimony trioxide based flame retardants must also meet the <=1000ppm threshold requirement.

(3) MSL, Peak Temp. - The Moisture Sensitivity Level rating according to the JEDEC industry standard classifications, and peak solder temperature.

(4) There may be additional marking, which relates to the logo, the lot trace code information, or the environmental category on the device.

(5) Multiple Device Markings will be inside parentheses. Only one Device Marking contained in parentheses and separated by a "~" will appear on a device. If a line is indented then it is a continuation of the previous line and the two combined represent the entire Device Marking for that device.

(6) Lead finish/Ball material - Orderable Devices may have multiple material finish options. Finish options are separated by a vertical ruled line. Lead finish/Ball material values may wrap to two lines if the finish value exceeds the maximum column width.

Important Information and Disclaimer: The information provided on this page represents TI's knowledge and belief as of the date that it is provided. TI bases its knowledge and belief on information provided by third parties, and makes no representation or warranty as to the accuracy of such information. Efforts are underway to better integrate information from third parties. TI has taken and continues to take reasonable steps to provide representative and accurate information but may not have conducted destructive testing or chemical analysis on incoming materials and chemicals. TI and TI suppliers consider certain information to be proprietary, and thus CAS numbers and other limited information may not be available for release.

In no event shall TI's liability arising out of such information exceed the total purchase price of the TI part(s) at issue in this document sold by TI to Customer on an annual basis.

TRAY

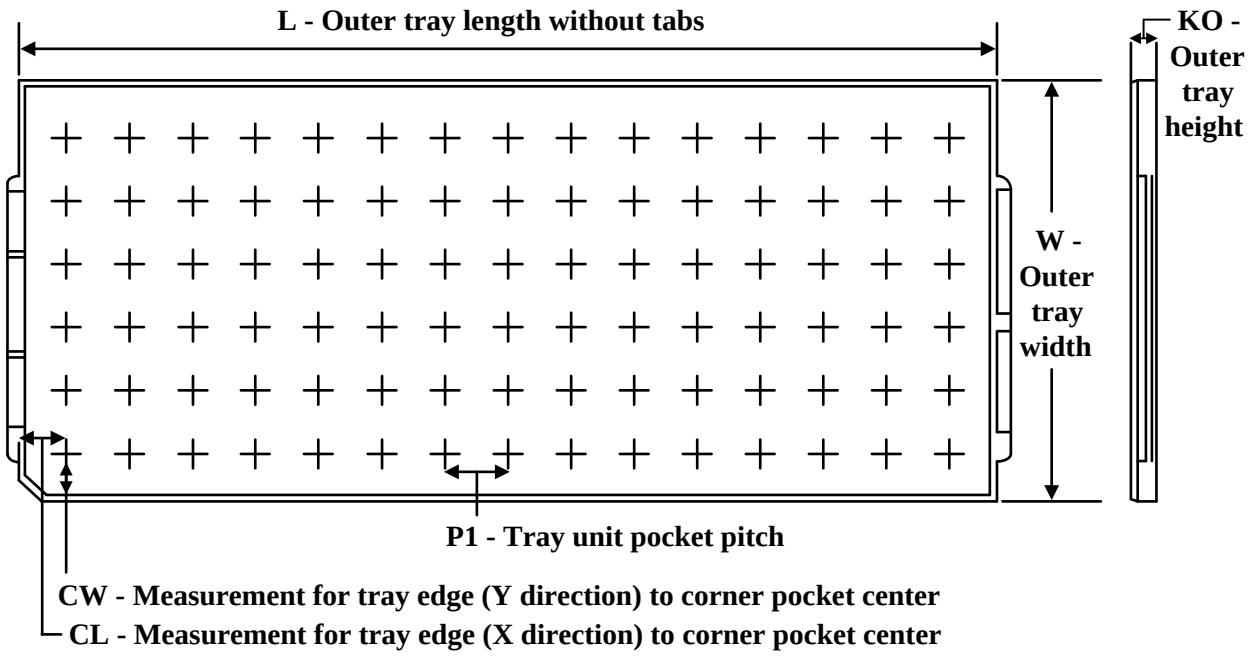

Chamfer on Tray corner indicates Pin 1 orientation of packed units.

*All dimensions are nominal

Device	Package Name	Package Type	Pins	SPQ	Unit array matrix	Max temperature (°C)	L (mm)	W (mm)	K0 (µm)	P1 (mm)	CL (mm)	CW (mm)
AM3892CCYG120	CYG	FCBGA	1031	44	4X11	150	315	135.9	7620	27.5	20	26.7
AM3892CCYG135	CYG	FCBGA	1031	44	4X11	150	315	135.9	7620	27.5	20	26.7
AM3894CCYG120	CYG	FCBGA	1031	44	4X11	150	315	135.9	7620	27.5	20	26.7
AM3894CCYGA120	CYG	FCBGA	1031	44	4X11	150	315	135.9	7620	27.5	20	26.7

CYG (S–PBGA–N1031) PLASTIC BALL GRID ARRAY

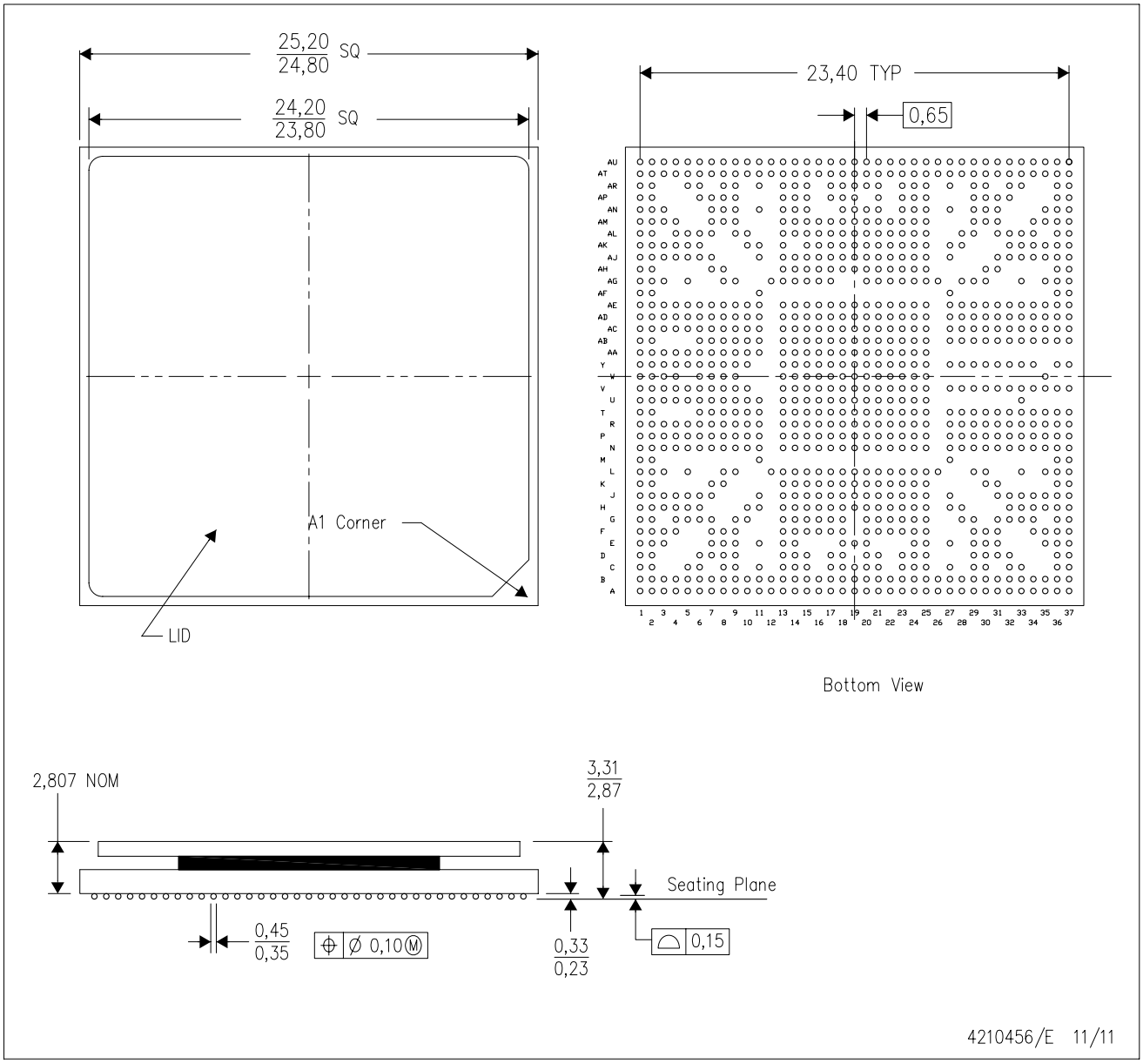

NOTES:
A. All linear dimensions are in millimeters. Dimensioning and tolerancing per ASME Y14.5M–1994.
B. This drawing is subject to change without notice.
C. Thermally enhanced package with a lid.
D. Flip chip application only.
E. Pb–free die bump and solder ball.

IMPORTANT NOTICE AND DISCLAIMER

TI PROVIDES TECHNICAL AND RELIABILITY DATA (INCLUDING DATA SHEETS), DESIGN RESOURCES (INCLUDING REFERENCE DESIGNS), APPLICATION OR OTHER DESIGN ADVICE, WEB TOOLS, SAFETY INFORMATION, AND OTHER RESOURCES “AS IS” AND WITH ALL FAULTS, AND DISCLAIMS ALL WARRANTIES, EXPRESS AND IMPLIED, INCLUDING WITHOUT LIMITATION ANY IMPLIED WARRANTIES OF MERCHANTABILITY, FITNESS FOR A PARTICULAR PURPOSE OR NON-INFRINGEMENT OF THIRD PARTY INTELLECTUAL PROPERTY RIGHTS.

These resources are intended for skilled developers designing with TI products. You are solely responsible for (1) selecting the appropriate TI products for your application, (2) designing, validating and testing your application, and (3) ensuring your application meets applicable standards, and any other safety, security, regulatory or other requirements.

These resources are subject to change without notice. TI grants you permission to use these resources only for development of an application that uses the TI products described in the resource. Other reproduction and display of these resources is prohibited. No license is granted to any other TI intellectual property right or to any third party intellectual property right. TI disclaims responsibility for, and you will fully indemnify TI and its representatives against, any claims, damages, costs, losses, and liabilities arising out of your use of these resources.

TI’s products are provided subject to TI’s Terms of Sale or other applicable terms available either on ti.com or provided in conjunction with such TI products. TI’s provision of these resources does not expand or otherwise alter TI’s applicable warranties or warranty disclaimers for TI products.

TI objects to and rejects any additional or different terms you may have proposed.

Mailing Address: Texas Instruments, Post Office Box 655303, Dallas, Texas 75265
Copyright © 2024, Texas Instruments Incorporated