LM25116 宽范围同步降压控制器

1 特性

- 可提供新款类似产品：
  - LM25141 45V 宽输入范围同步降压控制器
  - LM5141 65V 宽输入范围同步降压控制器
  - LM25148 具有超低 IQ 和 DRSS 的 42V 同步降压控制器
  - LM25149 具有超低 IQ 和 AEF 的 42V 同步降压控制器
- 仿真峰值电流模式
- 宽工作电压范围（高达 42V）
- 低 I_Q 关断 (< 10μA)
- 驱动标准或逻辑电平 MOSFET
- 稳健的 3.5A 峰值栅极驱动
- 自由运行或同步运行至 1MHz
- 可选二极管仿真模式
- 可编程输出电压范围为 1.215V 至 36V
- 精度为 1.5% 的基准电压
- 可编程电流限制
- 可编程软启动
- 可编程线路欠压锁定
- 自动切换至外部辅助电源
- 20 引脚 HTSSOP 外露焊盘
- 热关断

2 应用

- 汽车信息娱乐系统
- 工业直流/直流电机驱动器
- 汽车 USB 适配器
- 电信服务器

3 说明

LM25116 是一款同步降压控制器，适用于由高电压或宽输入范围电源供电的降压稳压器应用。此控制方法基于采用仿真电流斜坡的电流模式控制。电流模式控制可提供内部线路前馈、逐周期电流限制和简便的环路补偿。经仿真控制斜坡的使用减少了脉宽调制电路的噪声敏感度，从而实现高输入电压应用中所必需的对极小占空比的可靠控制。工作频率可在 50kHz 至 1MHz 之间进行编程。LM25116 可驱动具有自适应死区时间控制的外部高侧和低侧 NMOS 功率开关。用户可选二极管仿真模式可实现断续模式运行，从而提高轻负载条件下的效率。一个低静态电流关断禁用控制器，并且消耗的总输入电流少于 10μA。其他特性包括具有一个高压偏置稳压器；可自动切换至外部辅助电源以提高效率；热关断；频率同步；逐周期电流限制和可调线路欠压锁定。该器件采用电源增强型 20 引脚 HTSSOP 封装，并配有可帮助散热的裸露芯片连接焊盘。

新产品（LM25141、LM5141、LM25148 和 LM25149）具有 BOM 成本低、效率高、设计尺寸小等诸多特性。

器件信息

器件型号	封装(1)	封装尺寸(2)
LM25116	PWP（HTSSOP，20）	6.5mm x 6.4mm

(1) 有关所有可选封装，请参阅 节 10。
(2) 封装尺寸（长 × 宽）为标称值，并包括引脚（如适用）。

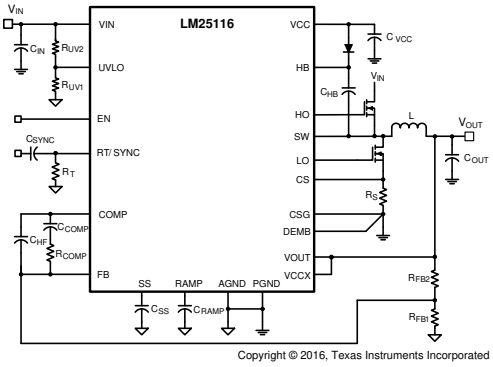

典型应用

本资源的原文使用英文撰写。 为方便起见，TI 提供了译文；由于翻译过程中可能使用了自动化工具，TI 不保证译文的准确性。 为确认准确性，请务必访问 ti.com 参考最新的英文版本（控制文档）。

Table of Contents

1 特性.....1
2 应用.....1
3 说明.....1
4 Pin Configuration and Functions.....3
5 Specifications.....5
5.1 Absolute Maximum Ratings.....5
5.2 ESD Ratings.....5
5.3 Recommended Operating Conditions.....5
5.4 Thermal Information.....6
5.5 Electrical Characteristics.....6
5.6 Switching Characteristics.....8
5.7 Typical Characteristics.....9
6 Detailed Description.....13
6.1 Overview.....13
6.2 Functional Block Diagram.....13
6.3 Feature Description.....13
6.4 Device Functional Modes.....20
7 Application and Implementation.....21
7.1 Application Information.....21
7.2 Typical Application.....21
7.3 Power Supply Recommendations.....33
7.4 Layout.....34
8 Device and Documentation Support.....35
8.1 接收文档更新通知.....35
8.2 支持资源.....35
8.3 Trademarks.....35
8.4 静电放电警告.....35
8.5 术语表.....35
9 Revision History.....36
10 Mechanical, Packaging, and Orderable Information.....36

Copyright © 2023 Texas Instruments Incorporated

4 Pin Configuration and Functions

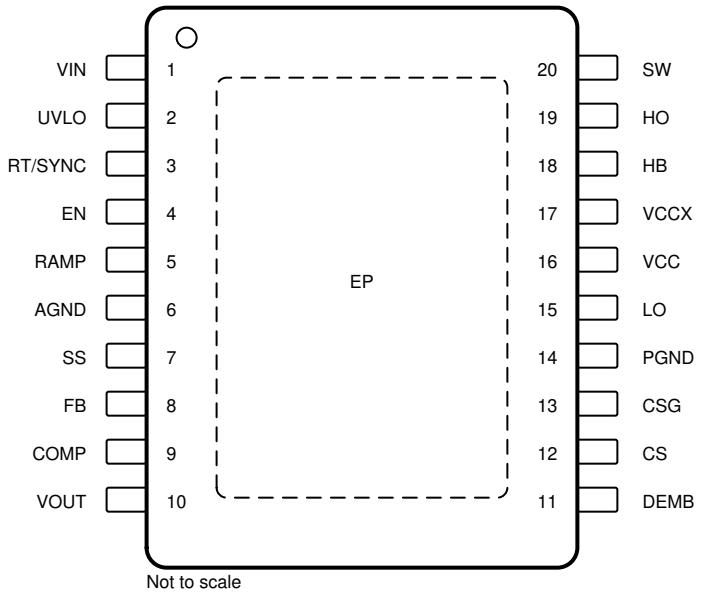

图 4-1. PWP Package 20-Pin HTSSOP Top View

表 4-1. Pin Functions

PIN		TYPE[(1)]	DESCRIPTION
NO.	NAME		
1	VIN	P	Chip supply voltage, input voltage monitor and input to the VCC regulator.
2	UVLO	I	If the UVLO pin is below 1.215 V, the regulator is in standby mode (VCC regulator running, switching regulator disabled). If the UVLO pin voltage is above 1.215 V, the regulator is operational. An external voltage divider can be used to set an undervoltage shutdown threshold. There is a fixed 5 µA pull up current on this pin when EN is high. UVLO is pulled to ground in the event a current limit condition exists for 256 clock cycles.
3	RT/SYNC	I	The internal oscillator is set with a single resistor between this pin and the AGND pin. The recommended frequency range is 50 kHz to 1 MHz. The internal oscillator can be synchronized to an external clock by AC coupling a positive edge onto this node.
4	EN	I	If the EN pin is below 0.5 V, the regulator is in a low power state drawing less than 10 µA from VIN. EN must be pulled above 3.3 V for normal operation.
5	RAMP	I	Ramp control signal. An external capacitor connected between this pin and the AGND pin sets the ramp slope used for current mode control.
6	AGND	G	Analog ground. Connect to PGND through the exposed pad ground connection under the LM25116.
7	SS	I	An external capacitor and an internal 10-µA current source set the soft start time constant for the rise of the error amp reference. The SS pin is held low during VCC < 4.5 V, UVLO < 1.215 V, EN input low or thermal shutdown.
8	FB	I	Feedback signal from the regulated output. This pin is connected to the inverting input of the internal error amplifier. The regulation threshold is 1.215 V.
9	COMP	O	Output of the internal error amplifier. The loop compensation network must be connected between this pin and the FB pin.
10	VOUT	I	Output monitor. Connect directly to the output voltage.
11	DEMB	I	Low-side MOSFET source voltage monitor for diode emulation. For start-up into a pre-biased load, tie this pin to ground at the CSG connection. For fully synchronous operation, use an external series resistor between DEMB and ground to raise the diode emulation threshold above the low-side SW on-voltage.
12	CS	I	Current sense amplifier input. Connect to the top of the current sense resistor or the drain of the low-sided MOSFET if $R_{DS(ON)}$ current sensing is used.
13	CSG	G	Current sense amplifier input. Connect to the bottom of the sense resistor or the source of the low-side MOSFET if $R_{DS(ON)}$ current sensing is used.

Copyright © 2023 Texas Instruments Incorporated

表 4-1. Pin Functions（续）

PIN		TYPE[(1)]	DESCRIPTION
NO.	NAME		
14	PGND	G	Power ground. Connect to AGND through the exposed pad ground connection under the LM25116.
15	LO	O	Connect to the gate of the low-side synchronous MOSFET through a short, low inductance path.
16	VCC	P	Locally decouple to PGND using a low ESR/ESL capacitor placed as close to the controller as possible.
17	VCCX	P	Optional input for an externally supplied VCC. If VCCX > 4.5 V, VCCX is internally connected to VCC and the internal VCC regulator is disabled. If VCCX is unused, it must be connected to ground.
18	HB	P	High-side driver supply for bootstrap gate drive. Connect to the cathode of the bootstrap diode and the positive terminal of the bootstrap capacitor. The bootstrap capacitor supplies current to charge the high-side MOSFET gate and must be placed as close to the controller as possible.
19	HO	O	Connect to the gate of the high-side synchronous MOSFET through a short, low inductance path
20	SW	O	Switch node. Connect to the negative terminal of the bootstrap capacitor and the source terminal of the high-side MOSFET.
EP	EP	—	Exposed pad. Solder to ground plane.

(1) G = Ground, I = Input, O = Output, P= Power

Copyright © 2023 Texas Instruments Incorporated

5 Specifications

5.1 Absolute Maximum Ratings

over operating free-air temperature range (unless otherwise noted)[1]

	MIN	MAX	UNIT
VIN to GND	– 0.3	45	V
VCC, VCCX, UVLO to GND[2]	– 0.3	16	V
SW, CS to GND	– 3	45	V
HB to SW	– 0.3	16	V
HO to SW	– 0.3	HB + 0.3	V
VOUT to GND	– 0.3	45	V
CSG to GND	– 1	1	V
LO to GND	– 0.3	VCC + 0.3	V
SS to GND	– 0.3	7	V
FB to GND	– 0.3	7	V
DEMB to GND	– 0.3	VCC	V
RT to GND	– 0.3	7	V
EN to GND	– 0.3	45	V
Junction temperature, T_J		150	°C
Storage temperature, T_{stg}	– 55	150	°C

(1) Stresses beyond those listed under *Absolute Maximum Ratings* may cause permanent damage to the device. These are stress ratings only, which do not imply functional operation of the device at these or any other conditions beyond those indicated under *Recommended Operating Conditions*. Exposure to absolute-maximum-rated conditions for extended periods may affect device reliability.
(2) These pins must not exceed VIN.

5.2 ESD Ratings

			VALUE	UNIT
$V_{(ESD)}$	Electrostatic discharge	Human-body model (HBM), per ANSI/ESDA/JEDEC JS-001[1]	±2000	V
		Charged-device model (CDM), per JEDEC specification JESD22-C101[2]	±750	

(1) JEDEC document JEP155 states that 500-V HBM allows safe manufacturing with a standard ESD control process.
(2) JEDEC document JEP157 states that 250-V CDM allows safe manufacturing with a standard ESD control process.

5.3 Recommended Operating Conditions

over operating free-air temperature range (unless otherwise noted)

	MIN	NOM	MAX	UNIT
VIN	6		42	V
VCC, VCCX	4.75		15	V
HB to SW	4.75		15	V
DEMB to GND	– 0.3		2	V
Junction temperature	– 40		125	°C

Copyright © 2023 Texas Instruments Incorporated

5.4 Thermal Information

THERMAL METRIC[1]		LM25116 PWP (HTSSOP) 20 PINS	UNIT
$R_{\theta JA}$	Junction-to-ambient thermal resistance	40.6	°C/W
$R_{\theta JC(top)}$	Junction-to-case (top) thermal resistance	20.9	°C/W
$R_{\theta JB}$	Junction-to-board thermal resistance	17.7	°C/W
ψ_{JT}	Junction-to-top characterization parameter	0.5	°C/W
ψ_{JB}	Junction-to-board characterization parameter	17.4	°C/W
$R_{\theta JC(bot)}$	Junction-to-case (bottom) thermal resistance	1.7	°C/W

(1) For more information about traditional and new thermal metrics, see the *Semiconductor and IC Package Thermal Metrics* application report.

5.5 Electrical Characteristics

The following conditions apply: T_J = 25°C, minimum and maximum limits apply over the junction temperature range of –40°C to 125°C and are provided for reference only, VIN = 24 V, VCC = 7.4 V, VCCX = 0 V, EN = 5 V, R_T = 16 kΩ, no load on LO and HO (unless otherwise noted).

PARAMETER		TEST CONDITIONS	MIN	TYP	MAX	UNIT
VIN SUPPLY						
I_{BIAS}	VIN operating current	VCCX = 0 V		4.6	6.5	mA
I_{BIASX}	VIN operating current	VCCX = 5 V		1	1.5	mA
I_{STDBY}	VIN shutdown current	EN = 0 V		1	10	µA
VCC REGULATOR						
$V_{CC(REG)}$	VCC regulation		7.1	7.4	7.7	V
	VCC LDO mode turnoff			10.6		V
	VCC regulation	VIN = 6 V	5	5.9	6	V
	VCC sourcing current limit	VCC = 0 V	15	26		mA
	VCCX switch threshold	VCCX rising	4.3	4.5	4.7	V
	VCCX switch hysteresis			0.25		V
	VCCX switch $R_{DS(ON)}$	ICCX = 10 mA		3.8	6.2	Ω
	VCCX leakage	VCCX = 0 V		–200		nA
	VCCX pulldown resistance	VCCX = 3 V		100		kΩ
	VCC undervoltage threshold	VCC rising	4.3	4.5	4.7	V
	VCC undervoltage hysteresis			0.2		V
	HB DC bias current	HB – SW = 15 V		125	200	µA
EN INPUT						
VIL max	EN input low threshold				0.5	V
VIH min	EN input high threshold		3.3			V
	EN input bias current	VEN = 3 V	–7.5	–3	1	µA
	EN input bias current	VEN = 0.5 V	–1	0	1	µA
	EN input bias current	VEN = 42 V		15		µA
UVLO THRESHOLDS						
	UVLO standby threshold	UVLO rising	1.17	1.215	1.262	V
	UVLO threshold hysteresis			0.1		V
	UVLO pullup current source	UVLO = 0 V		5.4		µA
	UVLO pulldown $R_{DS(ON)}$			80	210	Ω

Copyright © 2023 Texas Instruments Incorporated

5.5 Electrical Characteristics（续）

The following conditions apply: T_J = 25°C, minimum and maximum limits apply over the junction temperature range of –40°C to 125°C and are provided for reference only, VIN = 24 V, VCC = 7.4 V, VCCX = 0 V, EN = 5 V, R_T = 16 kΩ, no load on LO and HO (unless otherwise noted).

PARAMETER		TEST CONDITIONS	MIN	TYP	MAX	UNIT
SOFT START						
	SS current source	SS = 0 V	8	11	14	μA
	SS diode emulation ramp disable threshold	SS rising		3		V
	SS to FB offset	FB = 1.25 V		160		mV
	SS output low voltage	Sinking 100 μA, UVLO = 0 V		45		mV
ERROR AMPLIFIER						
V_{REF}	FB reference voltage	Measured at FB pin, FB = COMP	1.195	1.215	1.231	V
	FB input bias current	FB = 2 V		15	500	nA
	COMP sink and source current		3			mA
A_{OL}	DC gain			80		dB
f_{BW}	Unity gain bandwidth			3		MHz
PWM COMPARATORS						
$t_{HO(OFF)}$	Forced HO off-time		320	450	580	ns
$t_{ON(min)}$	Minimum HO on-time	VIN = 42 V, C_{RAMP} = 50 pF		100		ns
OSCILLATOR						
f_{SW1}	Frequency 1	RT = 16 kΩ	180	200	220	kHz
f_{SW2}	Frequency 2	RT = 5 kΩ	480	535	590	kHz
	RT output voltage		1.191	1.215	1.239	V
	RT sync positive threshold		3	3.5	4	V
CURRENT LIMIT						
$V_{CS(TH)}$	Cycle-by-cycle sense voltage threshold (CSG to CS)	VCCX = 0 V, RAMP = 0 V	94	110	126	mV
$V_{CS(THX)}$	Cycle-by-cycle sense voltage threshold (CSG to CS)	VCCX = 5 V, RAMP = 0 V	105	122	139	mV
	CS bias current	CS = 42 V	–1		1	μA
	CS bias current	CS = 0 V		90	125	μA
	CSG bias current	CSG = 0 V		90	125	μA
	Current limit fault timer	R_T = 16 kΩ, 200 kHz, 256 clock cycles		1.28		ms
RAMP GENERATOR						
I_{R1}	RAMP current 1	VIN = 40 V, VOUT=10 V	150	180	220	μA
I_{R2}	RAMP current 2	VIN = 10 V, VOUT = 10 V	21	28	35	μA
	VOUT bias current	VOUT = 36 V		200		μA
	RAMP output low voltage	VIN = 40 V, VOUT = 10 V		265		mV
DIODE EMULATION						
	SW zero cross threshold			–6		mV
	DEMB output current	DEMB = 0 V, SS = 1.25 V	1.6	2.7	3.8	μA
	DEMB output current	DEMB =0 V, SS = 2.8 V	28	38	48	μA
	DEMB output current	DEMB = 0 V, SS = regulated by FB	45	65	85	μA
LO GATE DRIVER						
V_{OLL}	LO low-state output voltage	I_{LO} = 10 mA		0.08	0.17	V
V_{OHL}	LO high-state output voltage	I_{LO} = -100 mA, V_{OHL} = V_{CC} – V_{LO}		0.25		V

Copyright © 2023 Texas Instruments Incorporated

5.5 Electrical Characteristics（续）

The following conditions apply: T_J = 25°C, minimum and maximum limits apply over the junction temperature range of –40°C to 125°C and are provided for reference only, VIN = 24 V, VCC = 7.4 V, VCCX = 0 V, EN = 5 V, R_T = 16 kΩ, no load on LO and HO (unless otherwise noted).

PARAMETER		TEST CONDITIONS	MIN	TYP	MAX	UNIT
	LO rise time	C-load = 1000 pF		18		ns
	LO fall time	C-load = 1000 pF		12		ns
I_{OHL}	Peak LO source current	V_{LO} = 0 V		1.8		A
I_{OLL}	Peak LO sink current	V_{LO} = VCC		3.5		A
HO GATE DRIVER						
V_{OLH}	HO low-state output voltage	I_{HO} = 100 mA		0.17	0.27	V
V_{OHH}	HO high-state output voltage	I_{HO} = -100 mA, V_{OHH} = V_{HB} – V_{HO}		0.45		V
	HO rise time	C-load = 1000 pF		19		ns
	HO high-side fall time	C-load = 1000 pF		13		ns
I_{OHH}	Peak HO source current	V_{HO} = 0 V		1		A
I_{OLH}	Peak HO sink current	V_{HO} = VCC		2.2		A
	HB to SW undervoltage			3		V
THERMAL						
T_{SD}	Thermal shutdown	Rising		170		°C
	Thermal shutdown hysteresis			15		°C

5.6 Switching Characteristics

over operating free-air temperature range (unless otherwise noted)

PARAMETER	TEST CONDITIONS	MIN	TYP	MAX	UNIT
LO fall to HO rise delay	C-load = 0		75		ns
HO fall to LO rise delay	C-load = 0		70		ns

Copyright © 2023 Texas Instruments Incorporated

5.7 Typical Characteristics

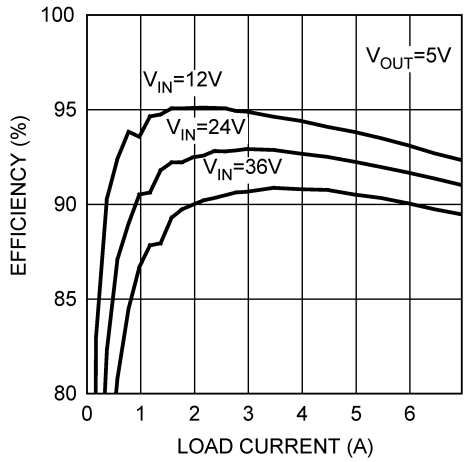

图 5-1. Typical Application Circuit Efficiency

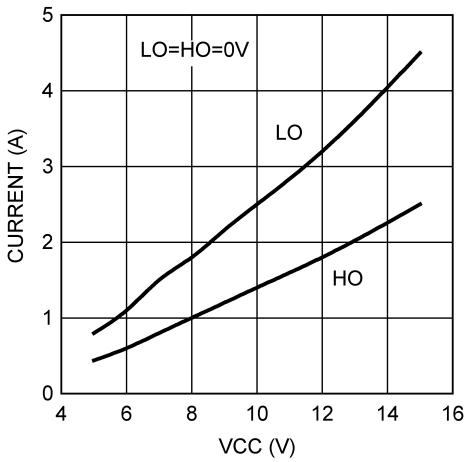

图 5-2. Driver Source Current vs VCC

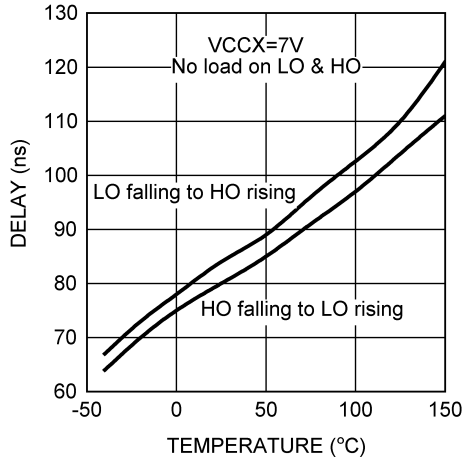

图 5-3. Driver Dead-time vs Temperature

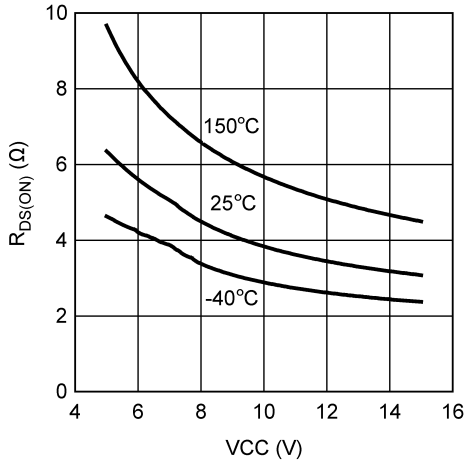

图 5-4. HO High $R_{DS(ON)}$ vs VCC

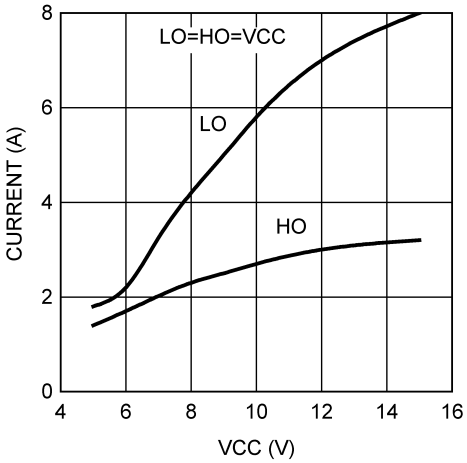

图 5-5. Driver Sink Current vs VCC

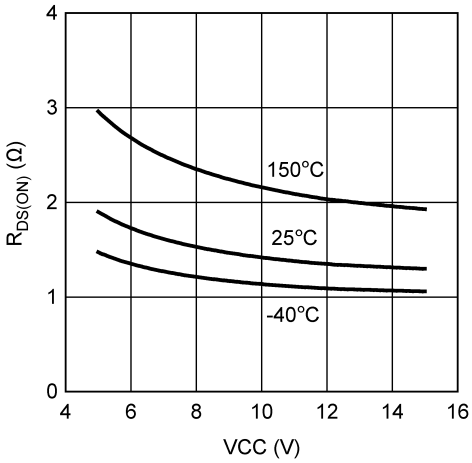

图 5-6. HO Low $R_{DS(ON)}$ vs VCC

5.7 Typical Characteristics (continued)

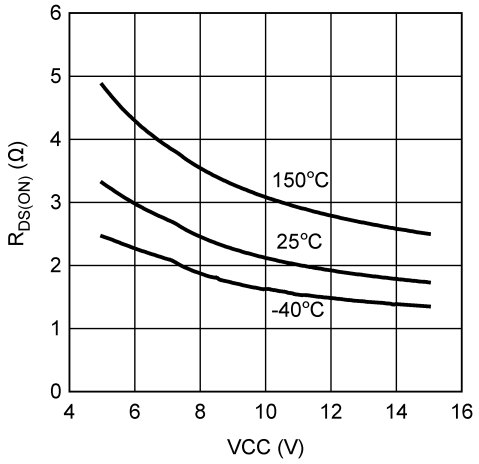

图 5-7. LO High $R_{DS(ON)}$ vs VCC

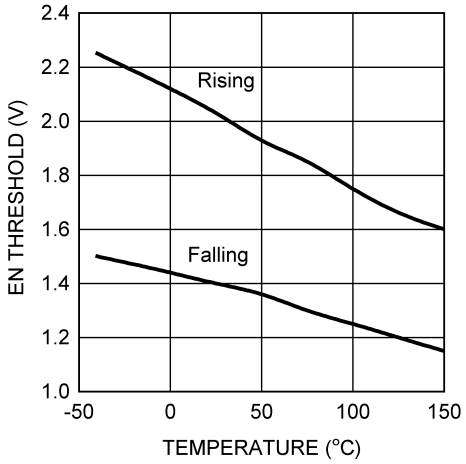

图 5-8. EN Input Threshold vs Temperature

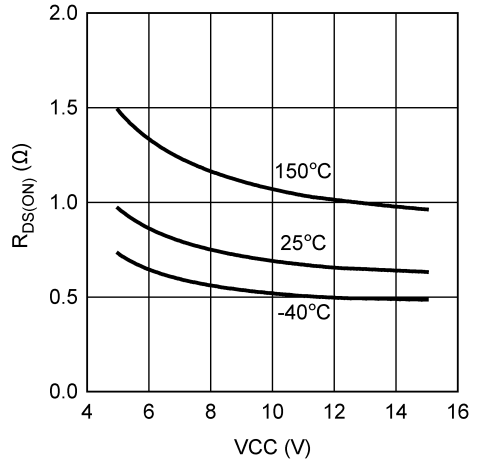

图 5-9. LO Low $R_{DS(ON)}$ vs VCC

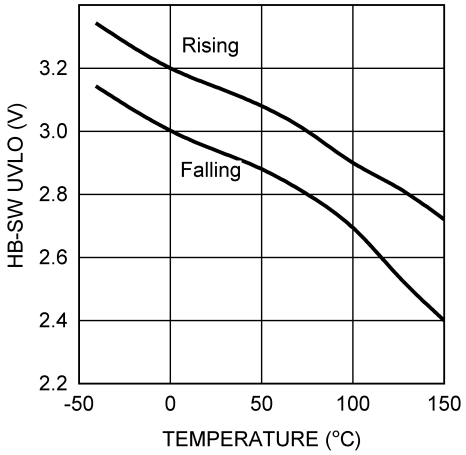

图 5-10. HB to SW UVLO vs Temperature

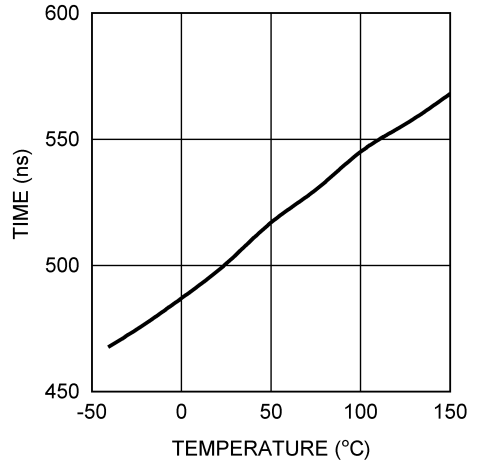

图 5-11. Forced HO Off-time vs Temperature VCCX = 5 V

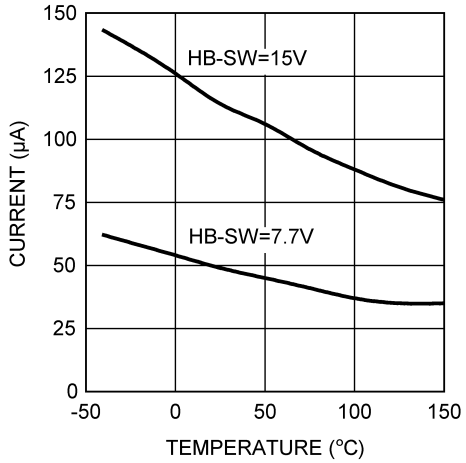

图 5-12. HB DC Bias Current vs Temperature

Copyright © 2023 Texas Instruments Incorporated

5.7 Typical Characteristics (continued)

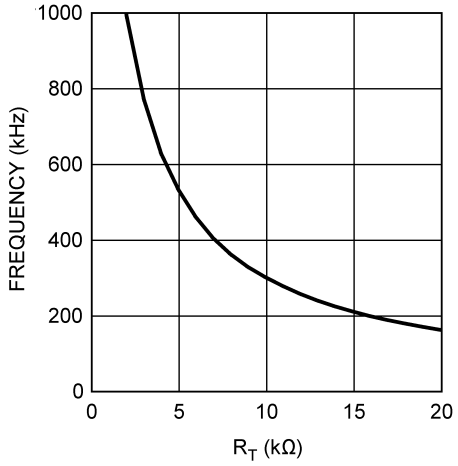

图 5-13. Frequency vs R_T

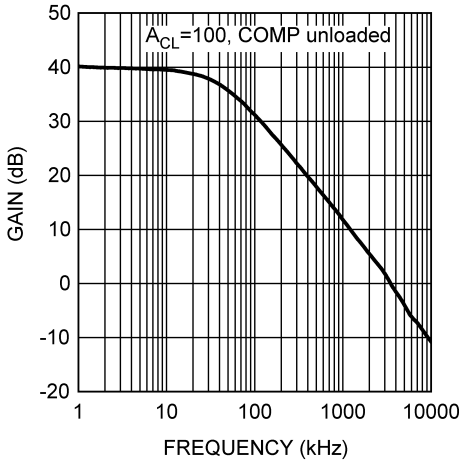

图 5-14. Error Amp Gain vs Frequency

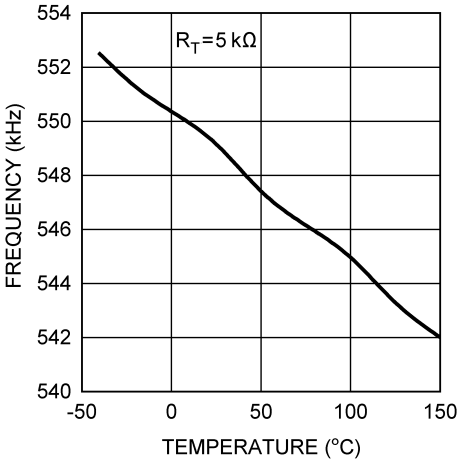

图 5-15. Frequency vs Temperature

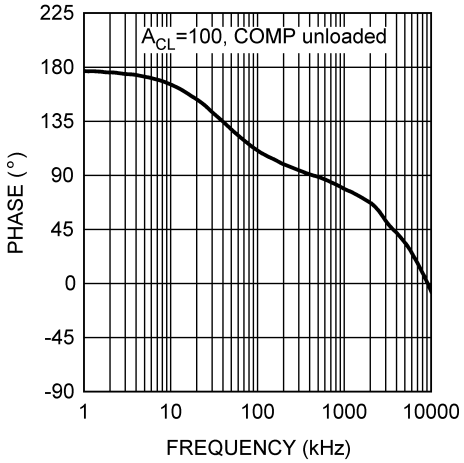

图 5-16. Error Amp Phase vs Frequency

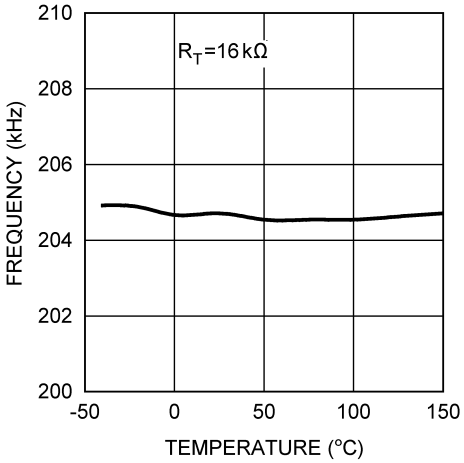

图 5-17. Frequency vs Temperature

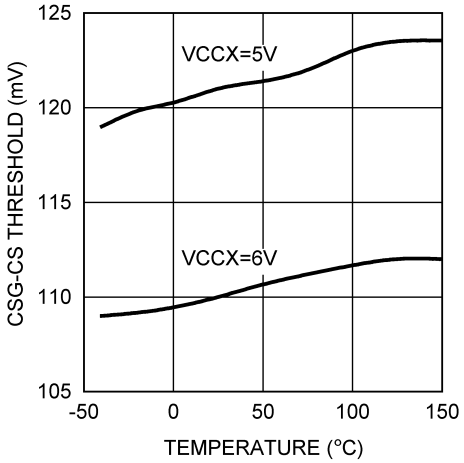

图 5-18. Current Limit Threshold vs Temperature

5.7 Typical Characteristics (continued)

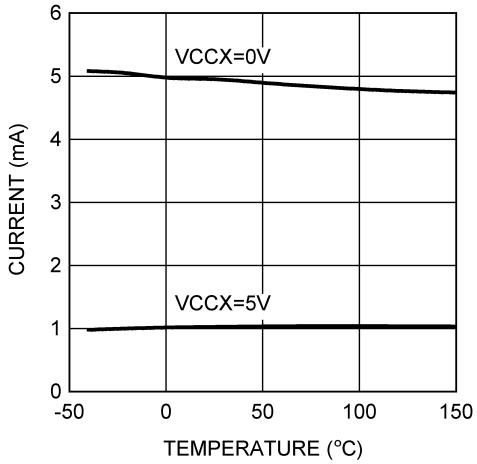

图 5-19. VIN Operating Current vs Temperature

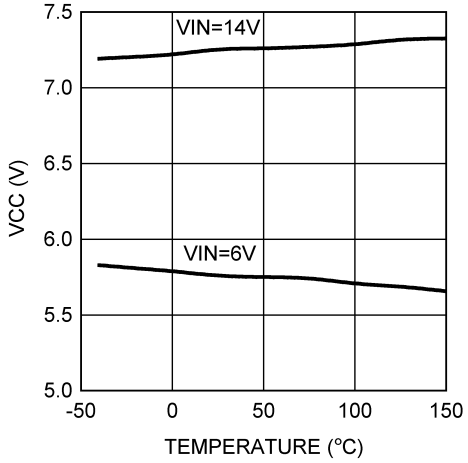

图 5-20. VCC vs Temperature

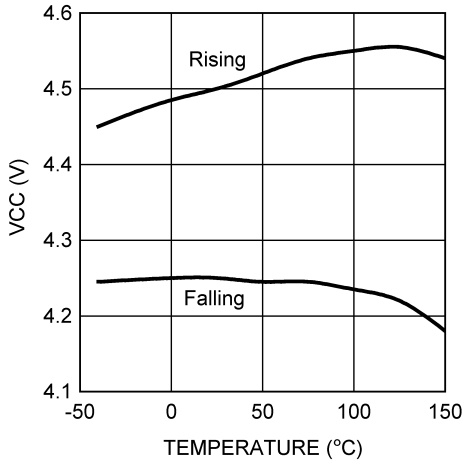

图 5-21. VCC UVLO vs Temperature

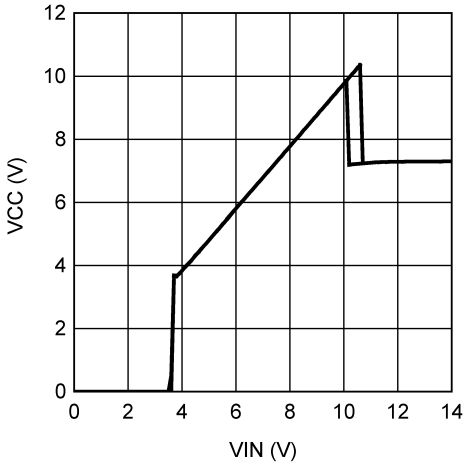

图 5-22. VCC vs VIN

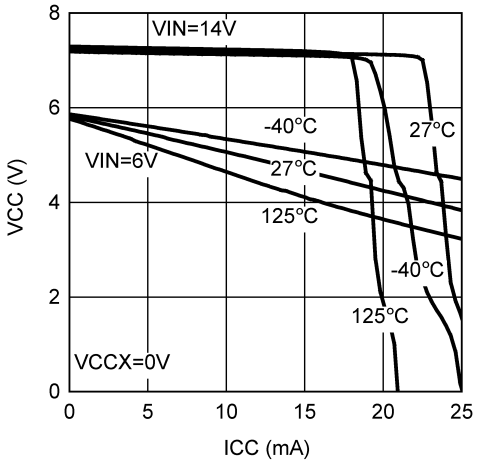

图 5-23. VCC vs ICC

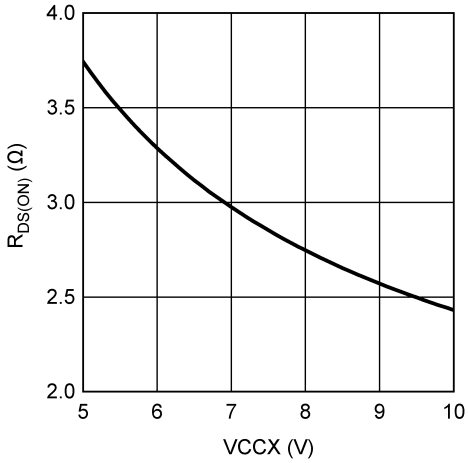

图 5-24. VCCX Switch $R_{DS(ON)}$ vs VCCX

Copyright © 2023 Texas Instruments Incorporated

6 Detailed Description

6.1 Overview

The LM25116 high-voltage switching regulator features all of the functions necessary to implement an efficient high-voltage buck regulator using a minimum of external components. This easy-to-use regulator integrates high-side and low-side MOSFET drivers capable of supplying peak currents of 2 A. The regulator control method is based on current mode control using an emulated current ramp. Emulated peak current mode control provides inherent line feedforward, cycle-by-cycle current limiting and ease of loop compensation. The use of an emulated control ramp reduces noise sensitivity of the pulse-width modulation circuit, allowing reliable processing of the very small duty cycles necessary in high input voltage applications. The operating frequency is user programmable from 50 kHz to 1 MHz. An oscillator or synchronization pin allows the operating frequency to be set by a single resistor or synchronized to an external clock. Fault protection features include current limiting, thermal shutdown and remote shutdown capability. An undervoltage lockout input allows regulator shutdown when the input voltage is below a user-selected threshold, and an enable function puts the regulator into an extremely low current shutdown through the enable input. The 20-pin HTSSOP package features an exposed pad to aid in thermal dissipation.

6.2 Functional Block Diagram

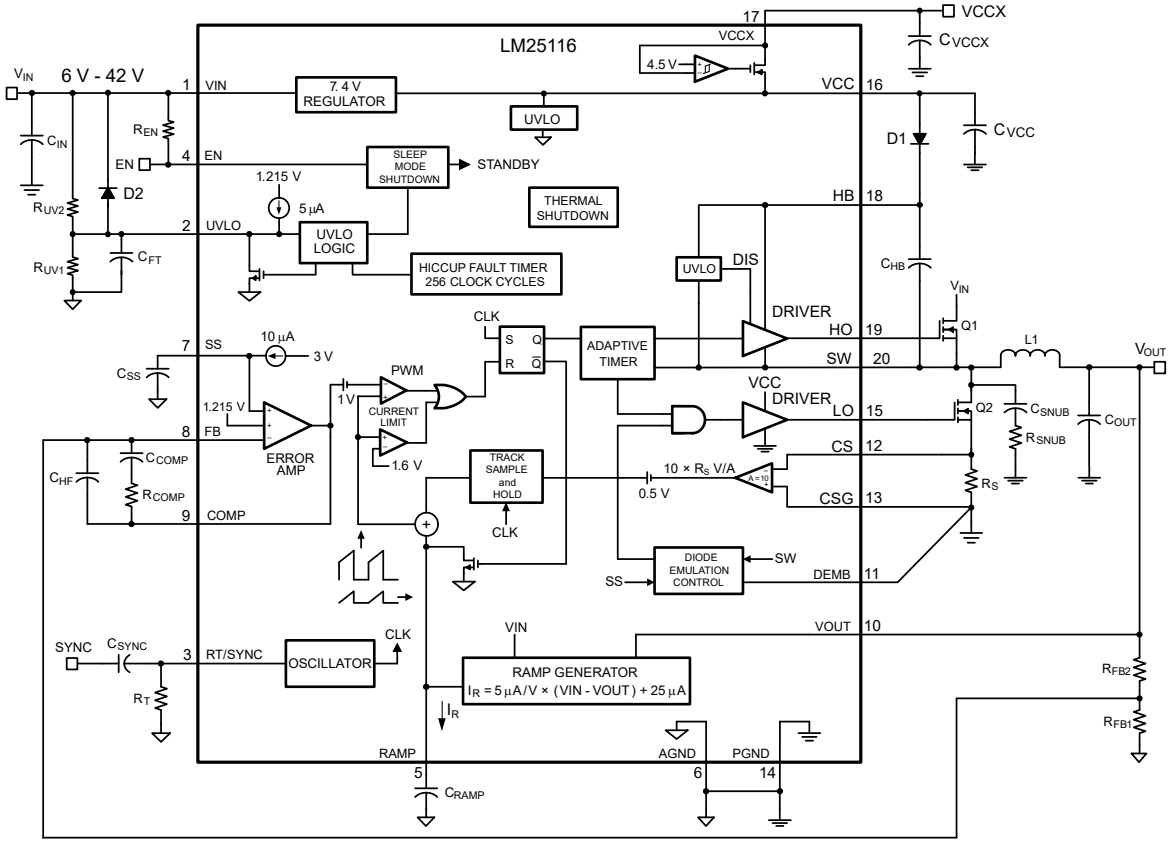

6.3 Feature Description

6.3.1 High-Voltage Start-Up Regulator

The LM25116 contains a dual mode internal high-voltage start-up regulator that provides the VCC bias supply for the PWM controller and a bootstrap gate drive for the high-side buck MOSFET. The input pin (VIN) can be connected directly to an input voltage source as high as 42 V. For input voltages below 10.6 V, a low dropout switch connects VCC directly to VIN. In this supply range, VCC is approximately equal to VIN. For VIN voltages greater than 10.6 V, the low dropout switch is disabled and the VCC regulator is enabled to maintain VCC at

approximately 7.4 V. The wide operating range of 6 V to 42 V is achieved through the use of this dual mode regulator.

Upon power up, the regulator sources current into the capacitor connected to the VCC pin. When the voltage at the VCC pin exceeds 4.5 V and the UVLO pin is greater than 1.215 V, the output switch is enabled and a soft-start sequence begins. The output switch remains enabled until VCC falls below 4.5 V, EN is pulled low, the UVLO pin falls below 1.215 V, or the die temperature exceeds the thermal limit threshold.

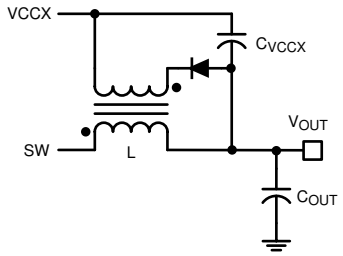

图 6-1. VCCX Bias Supply with Additional Inductor Winding

An output voltage derived bias supply can be applied to the VCCX pin to reduce the IC power dissipation. If the bias supply voltage is greater than 4.5 V, the internal regulator essentially shuts off, reducing the IC power dissipation. The VCC regulator series pass transistor includes a diode between VCC and VIN that must not be forward biased in normal operation. For an output voltage between 5 V and 15 V, VOUT can be connected directly to VCCX. For VOUT < 5 V, a bias winding on the output inductor can be added to VOUT. If the bias winding can supply VCCX greater than VIN, an external blocking diode is required from the input power supply to the VIN pin to prevent VCC from discharging into the input supply.

The output of the VCC regulator is current limited to 15 mA minimum. The VCC current is determined by the MOSFET gate charge, switching frequency and quiescent current (see *节 7.2.2.12* in the *节 7.2*). If VCCX is powered by the output voltage or an inductor winding, the VCC current must be evaluated during start-up to ensure that it is less than the 15 mA minimum current limit specification. If VCCX is powered by an external regulator derived from VIN, there is no restriction on the VCC current.

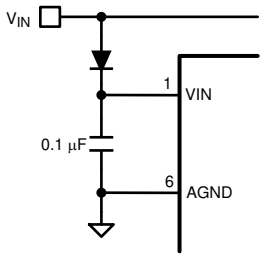

图 6-2. Input Blocking Diode for VCCX > VIN

In high-voltage applications, take extra care to ensure the VIN pin does not exceed the absolute maximum voltage rating of 45 V. During line or load transients, voltage ringing on the VIN line that exceeds values listed in *节 5.1* can damage the IC. Both careful PCB layout and the use of quality bypass capacitors placed close to the VIN and GND pins are essential.

6.3.2 Enable

The LM25116 contains an enable function allowing a very low input current shutdown. If the enable pin is pulled below 0.5 V, the regulator enters shutdown, drawing less than 10 µA from the VIN pin. Raising the EN input above 3.3 V returns the regulator to normal operation. The maximum EN transition time for proper operation is one switching period. For example, the enable rise time must be less than 4 µs for 250-kHz operation.

Copyright © 2023 Texas Instruments Incorporated

A 1-MΩ pullup resistor to VIN can be used to interface with an open collector control signal. At low input voltage the pullup resistor may be reduced to 100 kΩ to speed up the EN transition time. The EN pin can be tied directly to VIN if this function is not required. It must not be left floating. If low-power shutdown is not required, the UVLO pin must be used as an on/off control.

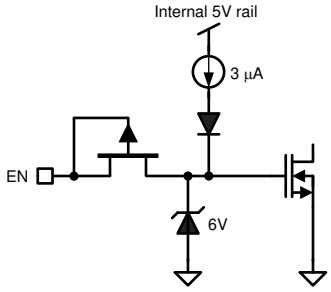

图 6-3. Enable Circuit

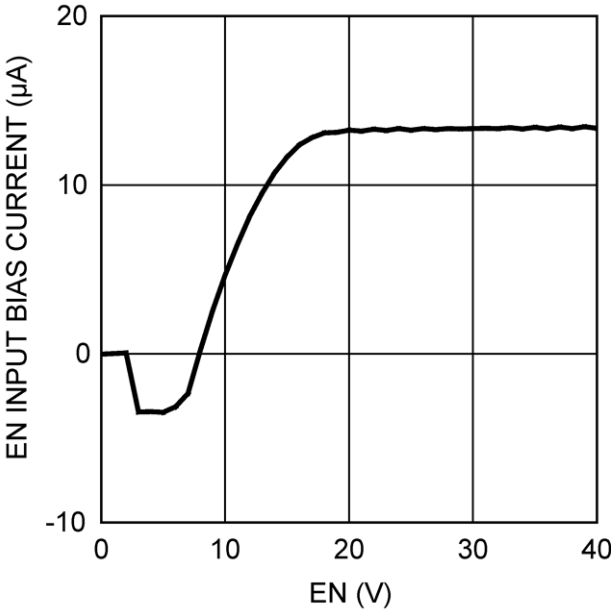

图 6-4. EN Bias Current vs Voltage

6.3.3 UVLO

An undervoltage lockout pin is provided to disable the regulator without entering shutdown. If the UVLO pin is pulled below 1.215 V, the regulator enters a standby mode of operation with the soft-start capacitor discharged and outputs disabled, but with the VCC regulator running. If the UVLO input is pulled above 1.215 V, the controller resumes normal operation. A voltage divider from input to ground can be used to set a VIN threshold to disable the supply in brown-out conditions or for low input faults. The UVLO pin has a 5-µA internal pullup current that allows this pin to left open if the input undervoltage lockout function is not required. For applications which require fast on or off cycling, the UVLO pin with an open collector control signal may be used to ensure proper start-up sequencing.

The UVLO pin is also used to implement a *hiccup* current limit. If a current limit fault exists for more than 256 consecutive clock cycles, the UVLO pin is internally pulled down to 200 mV and then released, and a new SS cycle initiated. A capacitor to ground connected to the UVLO pin sets the timing for hiccup mode current limit. When this feature is used in conjunction with the voltage divider, a diode across the top resistor may be used to

Copyright © 2023 Texas Instruments Incorporated

discharge the capacitor in the event of an input undervoltage condition. There is a 5-μs filter at the input to the fault comparator. At higher switching frequency (greater than approximately 250 kHz) the hiccup timer may be disabled if the fault capacitor is not used.

6.3.4 Oscillator and Sync Capability

The LM25116 oscillator frequency is set by a single external resistor connected between the RT/SYNC pin and the AGND pin. The resistor must be placed very close to the device and connected directly to the pins of the IC (RT/SYNC and AGND). To set a desired oscillator frequency (f_{SW}), the necessary value for the resistor can be calculated from 方程式 1.

$$R_T = \frac{T - 450\ \text{ns}}{284\ \text{pF}} \tag{1}$$

where

- $T = 1 / f_{SW}$
- R_T is in Ω
- 450 ns represents the fixed minimum off time

The LM25116 oscillator has a maximum programmable frequency that is dependent on the VCC voltage. If VCC is above 6 V, the frequency can be programmed up to 1 MHz. If VCCX is used to bias VCC and VCCX < 6 V, the maximum programmable oscillator frequency is 750 kHz.

The RT/SYNC pin can be used to synchronize the internal oscillator to an external clock. The external clock must be a higher frequency than the free-running frequency set by the RT resistor. The internal oscillator can be synchronized to an external clock by AC coupling a positive edge into the RT/SYNC pin. The voltage at the RT/SYNC pin is nominally 1.215 V and must exceed 4 V to trip the internal synchronization pulse detection. A 5-V amplitude signal and 100-pF coupling capacitor are recommended. The free-running frequency must be set nominally 15% below the external clock. Synchronizing above twice the free-running frequency may result in abnormal behavior of the pulse width modulator.

6.3.5 Error Amplifier and PWM Comparator

The internal high-gain error amplifier generates an error signal proportional to the difference between the regulated output voltage and an internal precision reference (1.215 V). The output of the error amplifier is connected to the COMP pin allowing the user to provide loop compensation components, generally a type II network. This network creates a pole at very low frequency, a mid-band zero, and a noise reducing high frequency pole. The PWM comparator compares the emulated current sense signal from the RAMP generator to the error amplifier output voltage at the COMP pin.

6.3.6 Ramp Generator

The ramp signal used in the pulse width modulator for current mode control is typically derived directly from the buck switch current. This switch current corresponds to the positive slope portion of the inductor current. Using this signal for the PWM ramp simplifies the control loop transfer function to a single pole response and provides inherent input voltage feedforward compensation. The disadvantage of using the buck switch current signal for PWM control is the large leading edge spike due to circuit parasitics that must be filtered or blanked. Also, the current measurement may introduce significant propagation delays. The filtering, blanking time and propagation delay limit the minimal achievable pulse width. In applications where the input voltage may be relatively large in comparison to the output voltage, controlling small pulse widths and duty cycles is necessary for regulation. The LM25116 uses a unique ramp generator which does not actually measure the buck switch current but rather reconstructs the signal. Representing or emulating the inductor current provides a ramp signal to the PWM comparator that is free of leading edge spikes and measurement or filtering delays. The current reconstruction is comprised of two elements, a sample-and-hold DC level and an emulated current ramp.

Copyright © 2023 Texas Instruments Incorporated

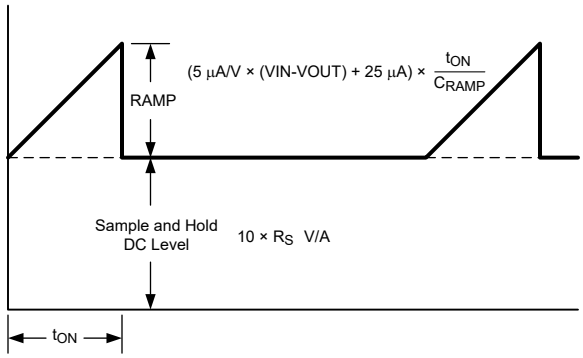

图 6-5. Composition of Current Sense Signal

The sample-and-hold DC level is derived from a measurement of the recirculating current through either the low-side MOSFET or current sense resistor. The voltage level across the MOSFET or sense resistor is sampled and held just prior to the onset of the next conduction interval of the buck switch. The current sensing and sample-and-hold provide the DC level of the reconstructed current signal. The positive slope inductor current ramp is emulated by an external capacitor connected from the RAMP pin to the AGND and an internal voltage controlled current source. The ramp current source that emulates the inductor current is a function of the VIN and VOUT voltages per 方程式 2.

$$I_R = 5\ \mu A/V \times (VIN - VOUT) + 25\ \mu A \tag{2}$$

Proper selection of the RAMP capacitor (C_{RAMP}) depends upon the value of the output inductor (L) and the current sense resistor (R_S). For proper current emulation, the DC sample and hold value and the ramp amplitude must have the same dependence on the load current. That is in 方程式 3.

$$R_S \times A = \frac{g_m \times L}{C_{RAMP}}, \text{ so}$$

$$C_{RAMP} = \frac{g_m \times L}{A \times R_S} \tag{3}$$

where

- g_m is the ramp generator transconductance (5 µA/V)
- A is the current sense amplifier gain (10 V/V).

The ramp capacitor must be placed very close to the device and connected directly to the pins of the IC (RAMP and AGND).

The difference between the average inductor current and the DC value of the sampled inductor current can cause instability for certain operating conditions. This instability is known as subharmonic oscillation, which occurs when the inductor ripple current does not return to its initial value by the start of next switching cycle. Subharmonic oscillation is normally characterized by observing alternating wide and narrow pulses at the switch node. Adding a fixed slope voltage ramp (slope compensation) to the current sense signal prevents this oscillation. The 25 µA of offset current provided from the emulated current source adds the optimal slope compensation to the ramp signal for a 5-V output. For higher output voltages, additional slope compensation may be required. In these applications, a resistor is added between RAMP and VCC to increase the ramp slope compensation.

Copyright © 2023 Texas Instruments Incorporated

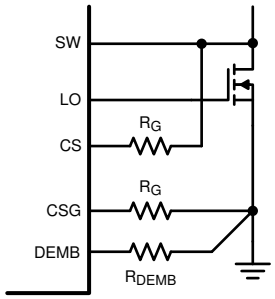

图 6-6. $R_{DS(ON)}$ Current Sensing without Diode Emulation

The DC current sample is obtained using the CS and CSG pins connected to either a source sense resistor (R_S) or the $R_{DS(ON)}$ of the low-side MOSFET. For $R_{DS(ON)}$ sensing, $R_S = R_{DS(ON)}$ of the low-side MOSFET. In this case it is sometimes helpful to adjust the current sense amplifier gain (A) to a lower value to obtain the desired current limit. Adding external resistors R_G in series with CS and CSG, the current sense amplifier gain A becomes 方程式 4.

$$A \approx \frac{10k}{1k + R_G} \tag{4}$$

6.3.7 Current Limit

The LM25116 contains a current limit monitoring scheme to protect the circuit from possible overcurrent conditions. When set correctly, the emulated current sense signal is proportional to the buck switch current with a scale factor determined by the current limit sense resistor. The emulated ramp signal is applied to the current limit comparator. If the emulated ramp signal exceeds 1.6 V, the current cycle is terminated (cycle-by-cycle current limiting). Because the ramp amplitude is proportional to V_{IN} – V_{OUT}, if V_{OUT} is shorted, there is an immediate reduction in duty cycle. To further protect the external switches during prolonged current limit conditions, an internal counter counts clock pulses when in current limit. When the counter detects 256 consecutive clock cycles, the regulator enters a low power dissipation hiccup mode of current limit. The regulator is shut down by momentarily pulling UVLO low, and the soft-start capacitor discharged. The regulator is restarted with a full soft-start cycle after UVLO charges back to 1.215 V. This process is repeated until the fault is removed. The hiccup off-time can be controlled by a capacitor to ground on the UVLO pin. In applications with low output inductance and high input voltage, the switch current may overshoot due to the propagation delay of the current limit comparator. If an overshoot must occur, the sample-and-hold circuit detects the excess recirculating current. If the sample-and-hold DC level exceeds the internal current limit threshold, the buck switch is disabled and skip pulses until the current has decayed below the current limit threshold. This approach prevents current runaway conditions due to propagation delays or inductor saturation because the inductor current is forced to decay following any current overshoot.

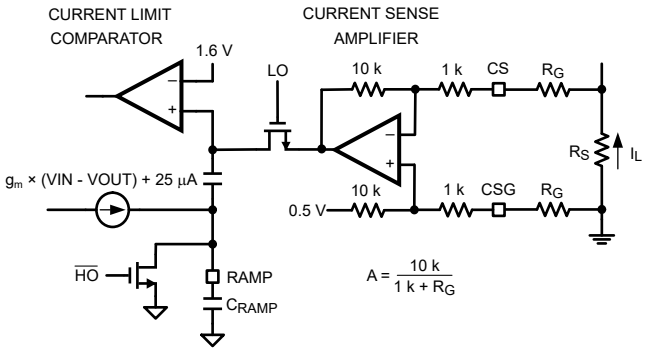

图 6-7. Current Limit and Ramp Circuit

Copyright © 2023 Texas Instruments Incorporated

Using a current sense resistor in the source of the low-side MOSFET provides superior current limit accuracy compared to $R_{DS(ON)}$ sensing. $R_{DS(ON)}$ sensing is far less accurate due to the large variation of MOSFET $R_{DS(ON)}$ with temperature and part-to-part variation. The CS and CSG pins must be Kelvin connected to the current sense resistor or MOSFET drain and source.

The peak current which triggers the current limit comparator is calculated with 方程式 5.

$$I_{PEAK} = \frac{1.1V - \frac{25\ \mu A\ x\ t_{ON}}{C_{RAMP}}}{A\ x\ R_S} \approx \frac{1.1V}{A\ x\ R_S} \tag{5}$$

where

- t_{ON} is the on-time of the high-side MOSFET

The 1.1-V threshold is the difference between the 1.6-V reference at the current limit comparator and the 0.5-V offset at the current sense amplifier. This offset at the current sense amplifier allows the inductor ripple current to go negative by 0.5 V / (A × R_S) when running full synchronous operation.

Current limit hysteresis prevents chatter around the threshold when VCCX is powered from VOUT. When 4.5 V < VCC < 5.8 V, the 1.6-V reference is increased to 1.72 V. The peak current which triggers the current limit comparator becomes 方程式 6.

$$I_{PEAK} = \frac{1.22V - \frac{25\ \mu A\ x\ t_{ON}}{C_{RAMP}}}{A\ x\ R_S} \approx \frac{1.22V}{A\ x\ R_S} \tag{6}$$

This has the effect of a 10% foldback of the peak current during a short circuit when VCCX is powered from a 5-V output.

6.3.8 HO Output

The LM25116 contains a high current, high-side driver and associated high-voltage level shift. This gate driver circuit works in conjunction with an external diode and bootstrap capacitor. A 1-µF ceramic capacitor, connected with short traces between the HB pin and SW pin, is recommended. During the off-time of the high-side MOSFET, the SW pin voltage is approximately –0.5 V and the bootstrap capacitor charges from VCC through the external bootstrap diode. When operating with a high PWM duty cycle, the buck switch is forced off each cycle for 450 ns to ensure that the bootstrap capacitor is recharged.

The LO and HO outputs are controlled with an adaptive deadtime methodology which insures that both outputs are never enabled at the same time. When the controller commands HO to be enabled, the adaptive block first disables LO and waits for the LO voltage to drop below approximately 25% of VCC. HO is then enabled after a small delay. Similarly, when HO turns off, LO waits until the SW voltage has fallen to ½ of VCC. LO is then enabled after a small delay. In the event that SW does not fall within approximately 150 ns, LO is asserted high. This methodology insures adequate dead-time for appropriately sized MOSFETs.

In some applications it may be desirable to slow down the high-side MOSFET turnon time to control switching spikes. This may be accomplished by adding a resistor is series with the HO output to the high-side gate. Values greater than 10 Ω must be avoided so as not to interfere with the adaptive gate drive. Use of an HB resistor for this function must be carefully evaluated so as not cause potentially harmful negative voltage to the high-side driver, and is generally limited to 2.2 Ω maximum.

6.3.9 Thermal Protection

Internal thermal shutdown circuitry is provided to protect the integrated circuit in the event the maximum junction temperature is exceeded. When activated, typically at 170°C, the controller is forced into a low power reset state, disabling the output driver and the bias regulator. This is designed to prevent catastrophic failures from accidental device overheating.

Copyright © 2023 Texas Instruments Incorporated

6.4 Device Functional Modes

6.4.1 Soft Start and Diode Emulation

The soft start feature allows the regulator to gradually reach the initial steady state operating point, thus reducing start-up stresses and surges. The LM25116 regulates the FB pin to the SS pin voltage or the internal 1.215-V reference, whichever is lower. At the beginning of the soft-start sequence when SS = 0 V, the internal 10-µA soft-start current source gradually increases the voltage of an external soft-start capacitor (C_{SS}) connected to the SS pin resulting in a gradual rise of FB and the output voltage.

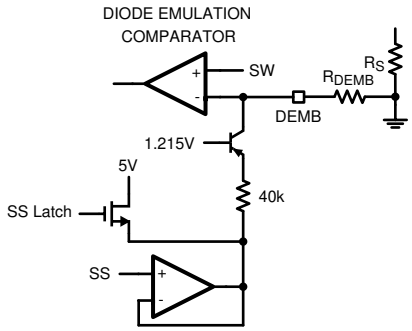

图 6-8. Diode Emulation Control

During this initial charging of C_{SS} to the internal reference voltage, the LM25116 forces diode emulation. That is, the low-side MOSFET turns off for the remainder of a cycle if the sensed inductor current becomes negative. The inductor current is sensed by monitoring the voltage between SW and DEMB. As the SS capacitor continues to charge beyond 1.215 V to 3 V, the DEMB bias current increases from 0 µA up to 40 µA. With the use of an external DEMB resistor (R_{DEMB}), the current sense threshold for diode emulation increases resulting in the gradual transition to synchronous operation. Forcing diode emulation during soft start allows the LM25116 to start up into a prebiased output without unnecessarily discharging the output capacitor. Full synchronous operation is obtained if the DEMB pin is always biased to a higher potential than the SW pin when LO is high. R_{DEMB} = 10 kΩ bias the DEMB pin to 0.45 V minimum, which is adequate for most applications. The DEMB bias potential must always be kept below 2 V. At very light loads with larger values of output inductance and MOSFET capacitance, the switch voltage may fall slowly. If the SW voltage does not fall below the DEMB threshold before the end of the HO fall to LO rise dead time, switching defaults to diode emulation mode. When R_{DEMB} = 0 Ω, the LM25116 always runs in diode emulation.

After SS charges to 3 V the SS latch is set, increasing the DEMB bias current to 65 µA. An amplifier is enabled that regulates SS to 160 mV above the FB voltage. This feature can prevent overshoot of the output voltage in the event the output voltage momentarily dips out of regulation. When a fault is detected (VCC undervoltage, UVLO pin < 1.215 V, or EN = 0 V) the soft-start capacitor is discharged. After the fault condition is no longer present, a new soft-start sequence begins.

Copyright © 2023 Texas Instruments Incorporated

7 Application and Implementation

备注

以下应用部分中的信息不属于 TI 器件规格的范围，TI 不担保其准确性和完整性。TI 的客 户应负责确定器件是否适用于其应用。客户应验证并测试其设计，以确保系统功能。

7.1 Application Information

The LM25116 device is a step-down DC-DC controller. The device is typically used to convert a higher voltage DC voltage to a lower DC voltage. Use the following design procedure to select component values. Alternately, use the WEBENCH software to generate a complete design. The WEBENCH software usese an iterative design procedure and assesses a comprehensive database of components when generating a design.

7.2 Typical Application

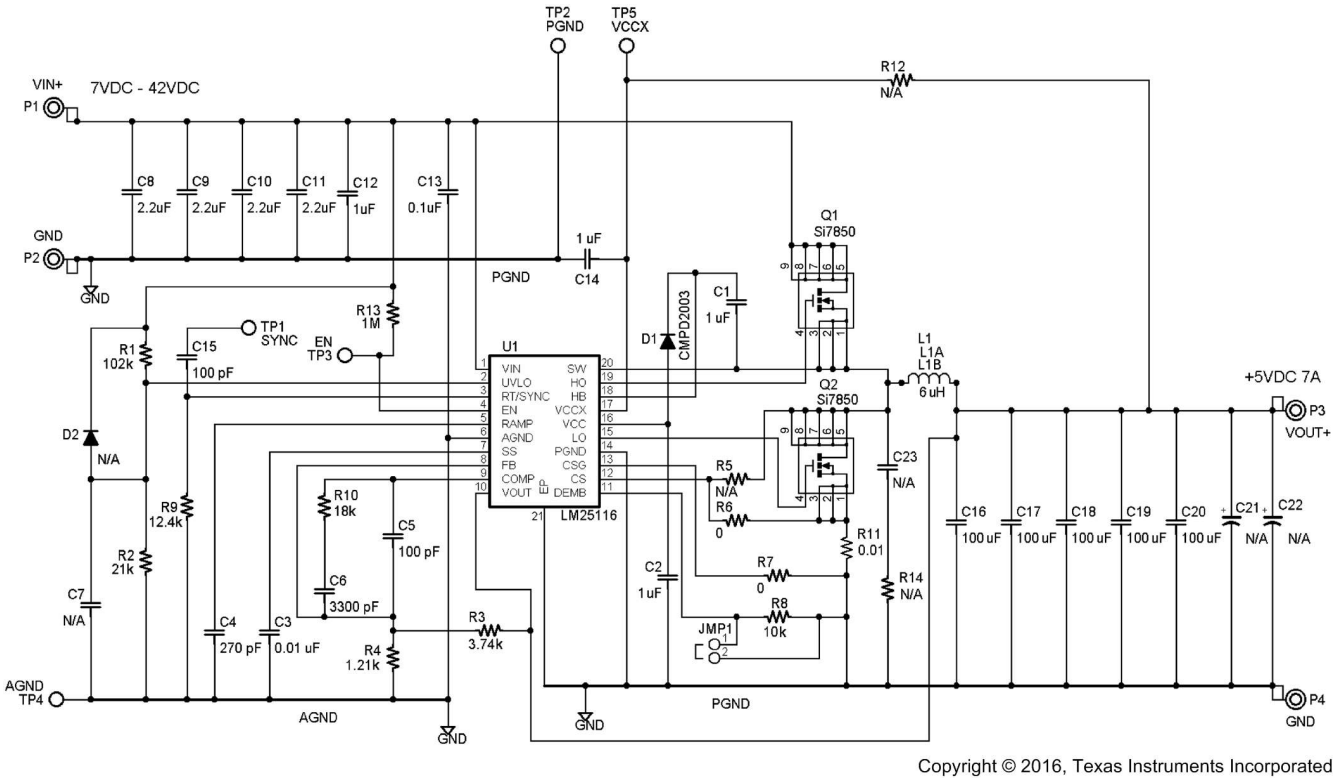

Copyright © 2016, Texas Instruments Incorporated

图 7-1. 5-V, 7-A Typical Application Schematic

7.2.1 Design Requirements

图 7-1 is configured with the following specifications:

- Output voltage = 5 V
- Input voltage = 7 V to 42 V
- Maximum load current = 7 A
- Switching frequency = 250 kHz

7.2.2 Detailed Design Procedure

The bill of materials for this design are listed in 表 7-1.

Simplified equations are used as a general guideline for the design method. Comprehensive equations are provided in 节 7.2.2.15.

表 7-1. Bill of Materials

ID	PART NO.	TYPE	SIZE	PARAMETERS	QTY	VENDOR
C1, C2, C14	C2012X7R1E105K	Capacitor, Ceramic	0805	1 µF, 25 V, X7R	3	TDK
C3	VJ0603Y103KXAAT	Capacitor, Ceramic	0603	0.01 µF, 50 V, X7R	1	Vishay
C4	VJ0603A271JXAAT	Capacitor, Ceramic	0603	270 pF, 50 V, COG, 5%	1	Vishay
C5, C15	VJ0603Y101KXAT W1BC	Capacitor, Ceramic	0603	100 pF, 50 V, X7R	2	Vishay
C6	VJ0603Y332KXXAT	Capacitor, Ceramic	0603	3300 pF, 25 V, X7R	1	Vishay
C7	—	Capacitor, Ceramic	0603	Not used	0	
C8, C9, C10, C11	C4532X7R2A225M	Capacitor, Ceramic	1812	2.2 µF, 100 V X7R	4	TDK
C12	C3225X7R2A105M	Capacitor, Ceramic	1210	1 µF, 100 V X7R	1	TDK
C13	C2012X7R2A104M	Capacitor, Ceramic	0805	0.1 µF, 100 V X7R	1	TDK
C16, C17, C18, C19, C20	C4532X6S0J107M	Capacitor, Ceramic	1812	100 µF, 6.3 V, X6S, 105°C	5	TDK
C21, C22	—	Capacitor, Tantalum	D Case	Not used	0	—
C23	—	Capacitor, Ceramic	0805	Not used	0	—
D1	CMPD2003	Diode, Switching	SOT-23	200 mA, 200 V	1	Central Semi
D2	CMPD2003	Diode, Switching	SOT-23	Not used	0	Central Semi
JMP1	—	Connector, Jumper	—	2-pin sq. post	1	—
L1	HC2LP-6R0	Inductor	—	6 µH, 16.5 A	1	Cooper
P1-P4	1514-2	Turret terminal	.090” dia.	—	4	Keystone
TP1-TP5	5012	Test point	.040” dia.	—	5	Keystone
Q1, Q2	Si7850DP	N-CH MOSFET	SO-8 Power PAK	10.3 A, 60 V	2	Vishay Siliconix
R1	CRCW06031023F	Resistor	0603	102 kΩ, 1%	1	Vishay
R2	CRCW06032102F	Resistor	0603	21 kΩ, 1%	1	Vishay
R3	CRCW06033741F	Resistor	0603	3.74 kΩ, 1%	1	Vishay
R4	CRCW06031211F	Resistor	0603	1.21 kΩ, 1%	1	Vishay
R5	—	Resistor	0603	Not used	0	—
R6, R7	CRCW06030R0J	Resistor	0603	0 Ω	2	Vishay
R8	CRCW0603103J	Resistor	0603	10 kΩ, 5%	1	Vishay
R9	CRCW06031242F	Resistor	0603	12.4 kΩ, 1%	1	Vishay
R10	CRCW0603183J	Resistor	0603	18 kΩ, 5%	1	Vishay
R11	LRC-LRF2010-01-R010-F	Resistor	2010	0.01 Ω, 1%	1	IRC
R12	—	Resistor	0603	Not used	0	—
R13	CRCW0603105J	Resistor	0603	1 MΩ, 5%	1	Vishay
R14	—	Resistor	1206	Not used	0	—
U1	LM25116MH	Synchronous buck controller	HTSSOP-20	—	1	TI

Copyright © 2023 Texas Instruments Incorporated

7.2.2.1 Timing Resistor

R_T sets the oscillator switching frequency. Generally, higher frequency applications are smaller but have higher losses. Operation at 250 kHz was selected for this example as a reasonable compromise for both small size and high efficiency. The value of R_T for 250-kHz switching frequency can be calculated with 方程式 7.

$$R_T = \frac{\frac{1}{250\ \text{kHz}} - 450\ \text{ns}}{284\ \text{pF}} = 12.5\ \text{k}\Omega \tag{7}$$

The nearest standard value of 12.4 kΩ was chosen for R_T.

7.2.2.2 Output Inductor

The inductor value is determined based on the operating frequency, load current, ripple current and the input and output voltages.

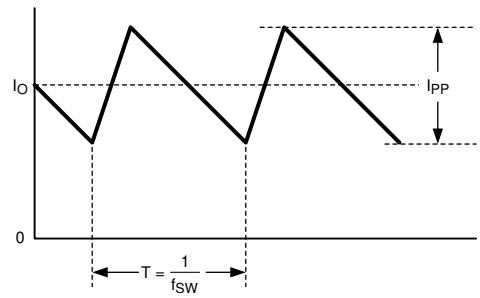

图 7-2. Inductor Current

Knowing the switching frequency (f_{SW}), maximum ripple current (I_{PP}), maximum input voltage ($V_{IN(MAX)}$) and the nominal output voltage (V_{OUT}), the inductor value is calculated with 方程式 8.

$$L = \frac{V_{OUT}}{I_{PP} \times f_{SW}} \times \left(1 - \frac{V_{OUT}}{V_{IN(MAX)}}\right) \tag{8}$$

The maximum ripple current occurs at the maximum input voltage. Typically, I_{PP} is 20% to 40% of the full load current. When running diode emulation mode, the maximum ripple current must be less than twice the minimum load current. For full synchronous operation, higher ripple current is acceptable. Higher ripple current allows for a smaller inductor size, but places more of a burden on the output capacitor to smooth the ripple current for low output ripple voltage. For this example, 40% ripple current is chosen for a smaller sized inductor in 方程式 9.

$$L = \frac{5\text{V}}{0.4 \times 7\text{A} \times 250\text{kHz}} \times \left(1 - \frac{5\text{V}}{42\text{V}}\right) = 6.3\ \mu\text{H} \tag{9}$$

The nearest standard value of 6 µH is used. The inductor must be rated for the peak current to prevent saturation. During normal operation, the peak current occurs at maximum load current plus maximum ripple. During overload conditions with properly scaled component values, the peak current is limited to $V_{CS(TH)}$ / R_S (See 节 7.2.2.3). At the maximum input voltage with a shorted output, the valley current must fall below $V_{CS(TH)}$ / R_S before the high-side MOSFET is allowed to turn on. The peak current in steady state increases to $V_{IN(MAX)}$ x $t_{ON(min)}$ / L above this level. The chosen inductor must be evaluated for this condition, especially at elevated temperature where the saturation current rating may drop significantly.

7.2.2.3 Current Sense Resistor

The current limit is set by the current sense resistor value (R_S) in 方程式 10.

$$I_{LIM} = \frac{V_{CS(TH)}}{R_S} \tag{10}$$

For a 5-V output, the maximum current sense signal occurs at the minimum input voltage, so R_S is calculated with 方程式 11.

$$R_S \le \frac{V_{CS(TH)}}{I_O + \frac{V_{OUT}}{2 \times L \times f_{SW}} \times \left(1 + \frac{V_{OUT}}{V_{IN(MIN)}}\right)} \tag{11}$$

For this example VCCX = 0 V, so $V_{CS(TH)}$ = 0.11 V. The current sense resistor is calculated with 方程式 12.

$$R_S \le \frac{0.11V}{7A + \frac{5V}{2 \times 6\ \mu H \times 250\ kHz} \times \left(1 + \frac{5V}{7V}\right)} \le 0.011\Omega \tag{12}$$

The next lowest standard value of 10 mΩ was chosen for R_S.

7.2.2.4 Ramp Capacitor

With the inductor and sense resistor value selected, the value of the ramp capacitor (C_{RAMP}) necessary for the emulation ramp circuit is 方程式 13.

$$C_{RAMP} \approx \frac{g_m \times L}{A \times R_S} \tag{13}$$

where

- L is the value of the output inductor in Henrys
- g_m is the ramp generator transconductance (5 µA/V)
- A is the current sense amplifier gain (10 V/V)

For the 5-V output design example, the ramp capacitor is calculated with 方程式 14.

$$C_{RAMP} = \frac{5\ \mu A/V \times 6\ \mu H}{10V/V \times 10\ m\Omega} = 300\ pF \tag{14}$$

The next lowest standard value of 270 pF was selected for C_{RAMP}. A COG type capacitor with 5% or better tolerance is recommended.

7.2.2.5 Output Capacitors

The output capacitors smooth the inductor ripple current and provide a source of charge for transient loading conditions. For this design example, five 100-µF ceramic capacitors where selected. Ceramic capacitors provide very low equivalent series resistance (ESR), but can exhibit a significant reduction in capacitance with DC bias. From the manufacturer’s data, the ESR at 250 kHz is 2 mΩ / 5 = 0.4 mΩ, with a 36% reduction in capacitance at 5 V. This is verified by measuring the output ripple voltage and frequency response of the circuit. The fundamental component of the output ripple voltage is calculated with 方程式 15.

$$\Delta V_{OUT} = I_{PP} \times \sqrt{ESR^2 + \left(\frac{1}{8 \times f_{SW} \times C_{OUT}}\right)^2} \tag{15}$$

方程式 16 calculates the typical values for the 5-V design example.

Copyright © 2023 Texas Instruments Incorporated

$$\Delta V_{OUT} = 3A \times \sqrt{0.4\ m\Omega^2 + \left(\frac{1}{8 \times 250\ kHz \times 320\ \mu F}\right)^2}$$

$$\Delta V_{OUT} = 4.8\ mV \tag{16}$$

7.2.2.6 Input Capacitors

The regulator supply voltage has a large source impedance at the switching frequency. Good quality input capacitors are necessary to limit the ripple voltage at the VIN pin while supplying most of the switch current during the on-time. When the buck switch turns on, the current into the switch steps to the valley of the inductor current waveform, ramps up to the peak value, and then drops to zero at turnoff. The input capacitors must be selected for RMS current rating and minimum ripple voltage. A good approximation for the required ripple current rating is $I_{RMS} > I_{OUT} / 2$.

Quality ceramic capacitors with a low ESR were selected for the input filter. To allow for capacitor tolerances and voltage rating, four 2.2-µF ceramic capacitors were used for the typical application circuit. With ceramic capacitors, the input ripple voltage is triangular and peak at 50% duty cycle. Considering the capacitance change with DC bias, the input ripple voltage is approximated with 方程式 17.

$$\Delta V_{IN} = \frac{I_{OUT}}{4 \times f_{SW} \times C_{IN}} = \frac{7A}{4 \times 250\ kHz \times 7\ \mu F} = 1V \tag{17}$$

When the converter is connected to an input power source, a resonant circuit is formed by the line impedance and the input capacitors. If step input voltage transients are expected near the maximum rating of the LM25116, a careful evaluation of the ringing and possible overshoot at the device VIN pin must be completed. To minimize overshoot make $C_{IN} > 10 \times L_{IN}$. The characteristic source impedance and resonant frequency are in 方程式 18.

$$Z_S = \sqrt{\frac{L_{IN}}{C_{IN}}} \qquad f_S = \frac{1}{2\pi\sqrt{L_{IN} \times C_{IN}}} \tag{18}$$

The converter exhibits a negative input impedance which is lowest at the minimum input voltage in 方程式 19.

$$Z_{IN} = -\frac{V_{IN}^2}{P_{OUT}} \tag{19}$$

The damping factor for the input filter is given by 方程式 20.

$$\delta = \frac{1}{2}\left(\frac{R_{IN} + ESR}{Z_S} + \frac{Z_S}{Z_{IN}}\right) \tag{20}$$

where

- R_{IN} is the input wiring resistance
- ESR is the series resistance of the input capacitors

The term Z_S / Z_{IN} is always negative due to Z_{IN}. When $\delta = 1$, the input filter is critically damped. This may be difficult to achieve with practical component values. With $\delta < 0.2$, the input filter exhibits significant ringing. If δ is zero or negative, there is not enough resistance in the circuit and the input filter sustains an oscillation. When operating near the minimum input voltage, an aluminum electrolytic capacitor across C_{IN} may be required to damp the input for a typical bench test setup. Any parallel capacitor must be evaluated for its RMS current rating. The current splits between the ceramic and aluminum capacitors based on the relative impedance at the switching frequency.

7.2.2.7 VCC Capacitor

The primary purpose of the VCC capacitor (C_{VCC}) is to supply the peak transient currents of the LO driver and bootstrap diode (D1) as well as provide stability for the VCC regulator. These current peaks can be several amperes. The recommended value of C_{VCC} must be no smaller than 0.47 µF, and must be a good quality, low ESR, ceramic capacitor placed at the pins of the IC to minimize potentially damaging voltage transients caused by trace inductance. A value of 1 µF was selected for this design.

7.2.2.8 Bootstrap Capacitor

The bootstrap capacitor (C_{HB}) between the HB and SW pins supplies the gate current to charge the high-side MOSFET gate at the turnon of each cycle as well as supplying the recovery charge for the bootstrap diode (D1). These current peaks can be several amperes. The recommended value of the bootstrap capacitor is at least 0.1 µF, and must be a good quality, low ESR, ceramic capacitor placed at the pins of the IC to minimize potentially damaging voltage transients caused by trace inductance. The absolute minimum value for the bootstrap capacitor is calculated as:

$$C_{HB} \geq \frac{Q_g}{\Delta V_{HB}} \tag{21}$$

where

- Q_g is the high-side MOSFET gate charge
- ΔV_{HB} is the tolerable voltage droop on C_{HB}

ΔV_{HB} is typically less than 5% of VCC. A value of 1 µF was selected for this design.

7.2.2.9 Soft Start Capacitor

The capacitor at the SS pin (C_{SS}) determines the soft-start time, which is the time for the reference voltage and the output voltage to reach the final regulated value. The soft-start time t_{SS} must be substantially longer than the time required to charge C_{OUT} to V_{OUT} at the maximum output current. To meet this requirement, use 方程式 22.

$$t_{SS} > V_{OUT} \times C_{OUT} / (I_{CURRENT\ LIMIT} - I_{OUT}) \tag{22}$$

The value of C_{SS} for a given time is determined with 方程式 23.

$$C_{SS} = \frac{t_{SS} \times 10\ \mu A}{1.215V} \tag{23}$$

For this application, a value of 0.01 µF was chosen for a soft-start time of 1.2 ms.

7.2.2.10 Output Voltage Divider

R_{FB1} and R_{FB2} set the output voltage level, the ratio of these resistors is calculated with 方程式 24.

$$\frac{R_{FB2}}{R_{FB1}} = \frac{V_{OUT}}{1.215V} - 1 \tag{24}$$

R_{FB1} is typically 1.21 kΩ for a divider current of 1 mA. The divider current can be reduced to 100 µA with R_{FB1}= 12.1 kΩ. For the 5-V output design example used here, R_{FB1} = 1.21 kΩ and R_{FB2} = 3.74 kΩ.

7.2.2.11 UVLO Divider

A voltage divider and filter can be connected to the UVLO pin to set a minimum operating voltage $V_{IN(MIN)}$ for the regulator. If this feature is required, the following procedure is used to determine appropriate resistor values for R_{UV2}, R_{UV1} and C_{FT}.

Copyright © 2023 Texas Instruments Incorporated

1. R_{UV2} must be large enough such that in the event of a current limit, the internal UVLO switch can pull UVLO < 200 mV. This can be ensured if: $R_{UV2} > 500 \times V_{IN(MAX)}$, where $V_{IN(MAX)}$ is the maximum input voltage and R_{UV2} is in ohms.
2. With an appropriate value for R_{UV2}, R_{UV1} can be selected using 方程式 25.

$$R_{UV1} = 1.215 \times \left(\frac{R_{UV2}}{V_{IN(MIN)} + (5\ \mu A \times R_{UV2}) - 1.215}\right) \tag{25}$$

where

- $V_{IN(MIN)}$ is the desired shutdown voltage

3. Capacitor C_{FT} provides filtering for the divider and determines the off-time of the *hiccup* duty cycle during current limit. When C_{FT} is used in conjunction with the voltage divider, a diode across the top resistor must be used to discharge C_{FT} in the event of an input undervoltage condition in 方程式 26.

$$t_{OFF} = -\left(\frac{R_{UV1} \times R_{UV2}}{R_{UV1} + R_{UV2}}\right) \times C_{FT} \times \ln\left(1 - \frac{1.215 \times (R_{UV1} + R_{UV2})}{V_{IN} \times R_{UV1}}\right) \tag{26}$$

If undervoltage shutdown is not required, R_{UV1} and R_{UV2} can be eliminated and the off-time becomes 方程式 27.

$$t_{OFF} = C_{FT} \times \frac{1.215V}{5\ \mu A} \tag{27}$$

The voltage at the UVLO pin must never exceed 16 V when using an external setpoint divider. It may be necessary to clamp the UVLO pin at high input voltages. For the design example, R_{UV2} = 102 kΩ and R_{UV1} = 21 kΩ for a shutdown voltage of 6.6 V. If sustained short-circuit protection is required, $C_{FT} \geqslant 1$ µF limits the short-circuit power dissipation. D2 may be installed when using C_{FT} with R_{UV1} and R_{UV2}.

7.2.2.12 MOSFETs

Selection of the power MOSFETs is governed by the same tradeoffs as switching frequency. Breaking down the losses in the high-side and low-side MOSFETs is one way to determine relative efficiencies between different devices. When using discrete 8-pin SO MOSFETs, the LM25116 is most efficient for output currents of 2 A to 10 A. Losses in the power MOSFETs can be broken down into conduction loss, gate charging loss, and switching loss. Conduction, or I^2R loss P_{DC}, is approximately 方程式 28 and 方程式 29.

$$P_{DC(HO\text{-}MOSFET)} = D \times (I_O{}^2 \times R_{DS(ON)} \times 1.3) \tag{28}$$

$$P_{DC(LO\text{-}MOSFET)} = (1 - D) \times (I_O{}^2 \times R_{DS(ON)} \times 1.3) \tag{29}$$

where

- D is the duty cycle

The factor 1.3 accounts for the increase in MOSFET on-resistance due to heating. Alternatively, the factor of 1.3 can be ignored and the on-resistance of the MOSFET can be estimated using the $R_{DS(ON)}$ versus Temperature curves in the MOSFET datasheet. Gate charging loss, P_{GC}, results from the current driving the gate capacitance of the power MOSFETs and is approximated with 方程式 30.

$$P_{GC} = n \times VCC \times Q_g \times f_{SW} \tag{30}$$

Q_g refers to the total gate charge of an individual MOSFET, and ‘n’ is the number of MOSFETs. If different types of MOSFETs are used, the ‘n’ term can be ignored and their gate charges summed to form a cumulative Q_g. Gate charge loss differs from conduction and switching losses in that the actual dissipation occurs in the LM25116 and not in the MOSFET itself. Further loss in the LM25116 is incurred as the gate driving current is supplied by the internal linear regulator. The gate drive current supplied by the VCC regulator is calculated with 方程式 31.

$$I_{GC} = (Q_{gh} + Q_{gl}) \times f_{SW} \quad (31)$$

where

- $Q_{gh} + Q_{gl}$ represent the gate charge of the HO and LO MOSFETs at VGS = VCC

To ensure start-up, I_{GC} must be less than the VCC current limit rating of 15 mA minimum when powered by the internal 7.4-V regulator. Failure to observe this rating may result in excessive MOSFET heating and potential damage. The I_{GC} run current may exceed 15 mA when VCC is powered by VCCX.

Switching loss occurs during the brief transition period as the MOSFET turns on and off. During the transition period both current and voltage are present in the channel of the MOSFET. The switching loss can be approximated with 方程式 32.

$$P_{SW} = 0.5 \times V_{IN} \times I_O \times (t_R + t_F) \times f_{SW} \quad (32)$$

where

- t_R and t_F are the rise and fall times of the MOSFET

Switching loss is calculated for the high-side MOSFET only. Switching loss in the low-side MOSFET is negligible because the body diode of the low-side MOSFET turns on before the MOSFET itself, minimizing the voltage from drain to source before turnon. For this example, the maximum drain-to-source voltage applied to either MOSFET is 42 V. VCC provides the drive voltage at the gate of the MOSFETs. The selected MOSFETs must be able to withstand 42 V plus any ringing from drain to source, and be able to handle at least VCC plus ringing from gate to source. A good choice of MOSFET for the 42-V input design example is the Si7850DP. It has an $R_{DS(ON)}$ of
20 mΩ, total gate charge of 14 nC, and rise and fall times of 10 ns and 12 ns respectively. In applications where a high step-down ratio is maintained for normal operation, efficiency may be optimized by choosing a high-side MOSFET with lower Q_g, and low-side MOSFET with lower $R_{DS(ON)}$.

For higher voltage MOSFETs which are not true logic level, it is important to use the UVLO feature. Choose a minimum operating voltage which is high enough for VCC and the bootstrap (HB) supply to fully enhance the MOSFET gates. This prevents operation in the linear region during power-on or power-off which can result in MOSFET failure. Similar consideration must be made when powering VCCX from the output voltage. For the high-side MOSFET, the gate threshold must be considered and careful evaluation made if the gate threshold voltage exceeds the HO driver UVLO.

7.2.2.13 MOSFET Snubber

A resistor-capacitor snubber network across the low-side MOSFET reduces ringing and spikes at the switching node. Excessive ringing and spikes can cause erratic operation and couple spikes and noise to the output. Selecting the values for the snubber is best accomplished through empirical methods. First, make sure the lead lengths for the snubber connections are very short. Start with a resistor value between 5 Ω and 50 Ω. Increasing the value of the snubber capacitor results in more damping, but higher snubber losses. Select a minimum value for the snubber capacitor that provides adequate damping of the spikes on the switch waveform at high load.

7.2.2.14 Error Amplifier Compensation

R_{COMP}, C_{COMP} and C_{HF} configure the error amplifier gain characteristics to accomplish a stable voltage loop gain. One advantage of current mode control is the ability to close the loop with only two feedback components, R_{COMP} and C_{COMP}. The voltage loop gain is the product of the modulator gain and the error amplifier gain. For the 5-V output design example, the modulator is treated as an ideal voltage-to-current converter. The DC modulator gain of the LM25116 can be modeled with 方程式 33.

$$\text{DC Gain}_{(MOD)} = R_{LOAD} / (A \times R_S) \quad (33)$$

Copyright © 2023 Texas Instruments Incorporated

The dominant low frequency pole of the modulator is determined by the load resistance (R_{LOAD}) and output capacitance (C_{OUT}). The corner frequency of this pole is calculated with 方程式 34.

$$f_{P(MOD)} = 1 / (2\pi \times R_{LOAD} \times C_{OUT}) \quad (34)$$

For R_{LOAD} = 5 V / 7 A = 0.714 Ω and C_{OUT} = 320 µF (effective) then $f_{P(MOD)}$ = 700 Hz

DC $Gain_{(MOD)}$ = 0.714 Ω / (10 × 10 mΩ) = 7.14 = 17 dB

For the 5-V design example, the modulator gain versus frequency characteristic was measured as shown in 图 7-3.

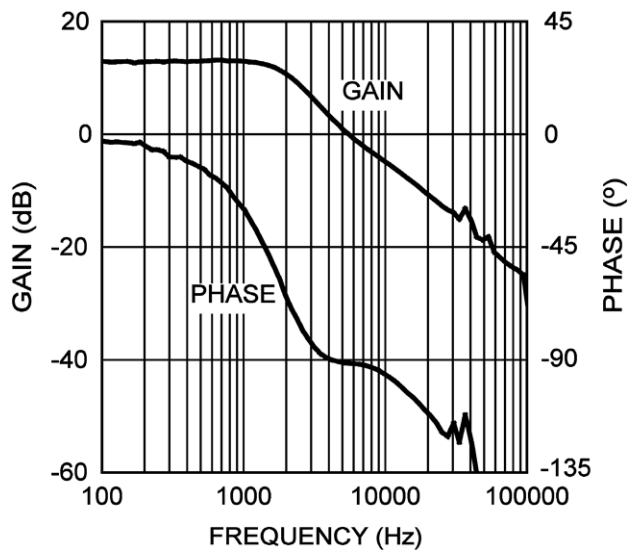

图 7-3. Modulator Gain and Phase

Components R_{COMP} and C_{COMP} configure the error amplifier as a type II configuration. The DC gain of the amplifier is 80 dB which has a pole at low frequency and a zero at $f_{ZEA} = 1 / (2\pi \times R_{COMP} \times C_{COMP})$. The error amplifier zero cancels the modulator pole leaving a single pole response at the crossover frequency of the voltage loop. A single pole response at the crossover frequency yields a very stable loop with 90° of phase margin. For the design example, a target loop bandwidth (crossover frequency) of one-tenth the switching frequency or 25 kHz was selected. The compensation network zero (f_{ZEA}) must be selected at least an order of magnitude less than the target crossover frequency. This constrains the product of R_{COMP} and C_{COMP} for a desired compensation network zero $1 / (2\pi \times R_{COMP} \times C_{COMP})$ to be 2.5 kHz. Increasing R_{COMP}, while proportionally decreasing C_{COMP}, increases the error amp gain. Conversely, decreasing R_{COMP} while proportionally increasing C_{COMP}, decreases the error amp gain. For the design example, C_{COMP} was selected as 3300 pF and R_{COMP} was selected as 18 kΩ. These values configure the compensation network zero at 2.7 kHz. The error amp gain at frequencies greater than f_{ZEA} is: R_{COMP} / R_{FB2}, which is approximately 4.8 (13.6 dB).

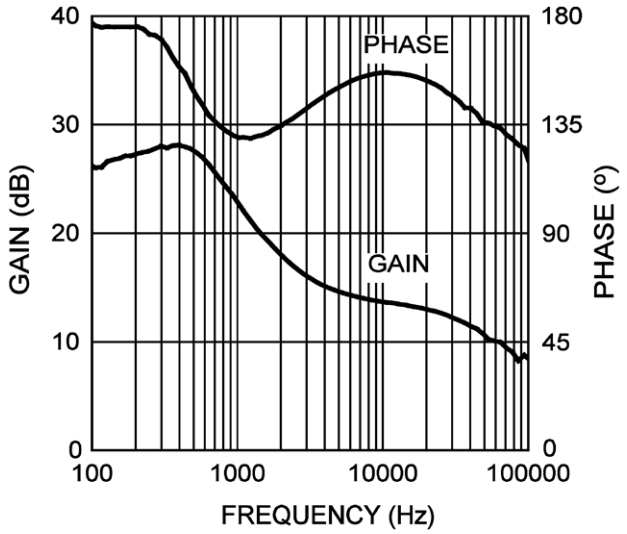

图 7-4. Error Amplifier Gain and Phase

The overall voltage loop gain can be predicted as the sum (in dB) of the modulator gain and the error amp gain.

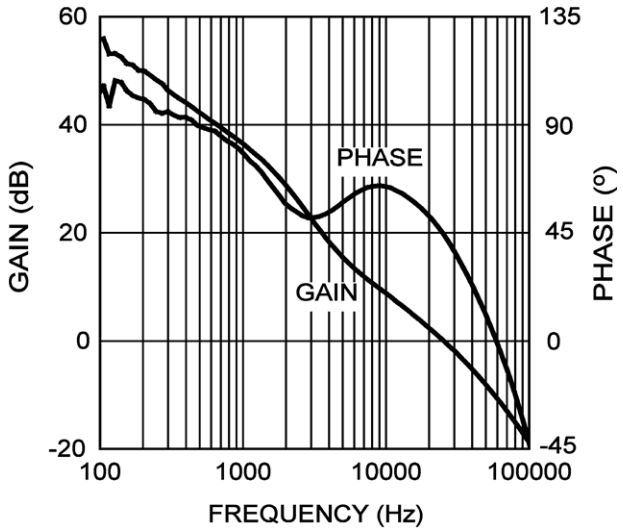

图 7-5. Overall Voltage Loop Gain and Phase

If a network analyzer is available, the modulator gain can be measured and the error amplifier gain can be configured for the desired loop transfer function. If a network analyzer is not available, the error amplifier compensation components can be designed with the guidelines given. Step load transient tests can be performed to verify acceptable performance. The step load goal is minimum overshoot with a damped response. C_{HF} can be added to the compensation network to decrease noise susceptibility of the error amplifier. The value of C_{HF} must be sufficiently small because the addition of this capacitor adds a pole in the error amplifier transfer function. This pole must be well beyond the loop crossover frequency. A good approximation of the location of the pole added by C_{HF} is: $f_{P2} = f_{ZEA} \times C_{COMP} / C_{HF}$. The value of C_{HF} was selected as 100 pF for the design example.

7.2.2.15 Comprehensive Equations

7.2.2.15.1 Current Sense Resistor and Ramp Capacitor

$T = 1 / f_{SW}$, $g_m = 5$ µA/V, A = 10 V/V. I_{OUT} is the maximum output current at current limit.

Copyright © 2023 Texas Instruments Incorporated

General method for V_{OUT} < 5 V is 方程式 35 and 方程式 36.

$$R_S = \frac{V_{CS(TH)}}{I_{OUT} - \frac{V_{OUT} \times T}{2 \times L} \times \left(1 - \frac{V_{OUT}}{V_{IN(MIN)}}\right) + \frac{V_{OUT} \times T}{L} \times \frac{\left(1 + \frac{5 - V_{OUT}}{V_{IN(MIN)}}\right)}{\left(1 + \frac{5 - V_{OUT}}{V_{IN(MAX)}}\right)}} \tag{35}$$

$$C_{RAMP} = \frac{g_m \times L}{A \times R_S} \times \left(1 + \frac{5 - V_{OUT}}{V_{IN(MAX)}}\right) \tag{36}$$

General method for 5 V < V_{OUT} < 7.5 V is 方程式 37 and 方程式 38.

$$R_S = \frac{V_{CS(TH)}}{I_{OUT} - \frac{V_{OUT} \times T}{2 \times L} \times \left(1 - \frac{V_{OUT}}{V_{IN(MIN)}}\right) + \frac{V_{OUT} \times T}{L}} \tag{37}$$

$$C_{RAMP} = \frac{g_m \times L}{A \times R_S} \times \left(1 + \frac{5 - V_{OUT}}{V_{IN(MIN)}}\right) \tag{38}$$

Best performance method minimizes the current limit deviation due to changes in line voltage, while maintaining near optimal slope compensation.

Calculate optimal slope current with 方程式 39, I_{OS} = (V_{OUT} / 3) × 10 µA/V. For example, at V_{OUT} = 7.5 V, I_{OS} = 25 µA.

$$R_S = \frac{V_{CS(TH)}}{I_{OUT} + \frac{V_{OUT} \times T}{L}} \qquad C_{RAMP} = \frac{I_{OS} \times L}{V_{OUT} \times A \times R_S} \tag{39}$$

Calculate V_{RAMP} at the nominal input voltage with 方程式 40.

$$V_{RAMP} = \frac{V_{OUT}}{V_{IN}} \times \frac{((V_{IN} - V_{OUT}) \times g_m + I_{OS}) \times T}{C_{RAMP}} \tag{40}$$

For V_{OUT} > 7.5 V, install a resistor from the RAMP pin to VCC and calculate with 方程式 41.

$$R_{RAMP} = \frac{VCC - V_{RAMP}}{I_{OS} - 25\ \mu A} \tag{41}$$

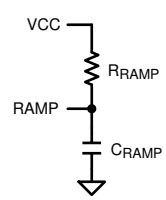

图 7-6. R_{RAMP} to VCC for V_{OUT} > 7.5 V

For V_{OUT} < 7.5 V, a negative VCC is required. This can be made with a simple charge pump from the LO gate output. Install a resistor from the RAMP pin to the negative VCC and calculate with 方程式 42.

$$R_{RAMP} = \frac{VCC - 0.5V + V_{RAMP}}{25\ \mu A - I_{OS}} \tag{42}$$

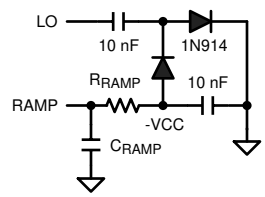

图 7-7. R_{RAMP} to –VCC for V_{OUT} < 7.5 V

If a large variation is expected in VCC, say for V_{IN} < 11 V, a Zener regulator may be added to supply a constant voltage for R_{RAMP}.

7.2.2.15.2 Modulator Transfer Function

方程式 43 through 方程式 47 can be used to calculate the control-to-output transfer function.

$$\frac{\hat{V}_{OUT}}{\hat{V}_{COMP}} = \frac{R_{LOAD}}{A \times R_S} \times \frac{1}{1 + \frac{R_{LOAD}}{K_m \times A \times R_S}} \times \frac{1 + \frac{s}{\omega_Z}}{\left(1 + \frac{s}{\omega_P}\right) \times \left(1 + \frac{s}{\omega_n \times Q} + \frac{s^2}{\omega_n^2}\right)} \tag{43}$$

$$K_m = \frac{1}{\frac{(D - 0.5) \times A \times R_S \times T}{L} + (1 - 2 \times D) \times K_{SL} + \frac{V_{SL}}{V_{IN}}} \tag{44}$$

$$K_{SL} = \frac{g_m \times T}{C_{RAMP}} \qquad V_{SL} = \frac{I_{OS} \times T}{C_{RAMP}} \tag{45}$$

$$\omega_Z = \frac{1}{C_{OUT} \times ESR} \qquad \omega_P = \frac{1}{C_{OUT}} \times \left(\frac{1}{R_{LOAD}} + \frac{1}{K_m \times A \times R_S}\right) \qquad \omega_n = \frac{\pi}{T} \tag{46}$$

$$S_e = \frac{(V_{IN} - V_{OUT}) \times K_{SL} + V_{SL}}{T} \qquad S_n = \frac{V_{IN} \times A \times R_S}{L}$$

$$m_C = \frac{S_e}{S_n} \qquad Q = \frac{1}{\pi \times (m_C - 0.5)} \tag{47}$$

K_m is the effective DC gain of the modulating comparator. The duty cycle D = V_{OUT} / V_{IN}. K_{SL} is the proportional slope compensation term. V_{SL} is the fixed slope compensation term. Slope compensation is set by m_c, which is the ratio of the external ramp to the natural ramp. The switching frequency sampling gain is characterized by ω_n and Q, which accounts for the high frequency inductor pole.

For V_{SL} without R_{RAMP}, use I_{OS} = 25 µA.

For V_{SL} with R_{RAMP} to V_{CC}, use I_{OS} = 25 µA + V_{CC}/R_{RAMP}.

For V_{SL} with R_{RAMP} to -V_{CC}, use I_{OS} = 25 µA - V_{CC}/R_{RAMP}.

Copyright © 2023 Texas Instruments Incorporated

7.2.2.15.3 Error Amplifier Transfer Function

方程式 48, 方程式 49, and 方程式 50 are used to calculate the error amplifier transfer function:

$$\frac{\hat{V}_{COMP}}{\hat{V}_{OUT(FB)}} = -G_{EA(S)} \times \frac{1}{1 + \left(\frac{1}{A_{OL}} + \frac{s}{\omega_{BW}}\right) \times \left(1 + \frac{G_{EA(S)}}{K_{FB}}\right)} \tag{48}$$

$$G_{EA(S)} = \frac{1 + \frac{s}{\omega_{ZEA}}}{\frac{s}{\omega_O} \times \left(1 + \frac{s}{\omega_{HF}}\right)} \qquad K_{FB} = \frac{R_{FB1}}{R_{FB1} + R_{FB2}} \tag{49}$$

$$\omega_{ZEA} = \frac{1}{C_{COMP} \times R_{COMP}} \qquad \omega_O = \frac{1}{(C_{HF} + C_{COMP}) \times R_{FB2}}$$

$$\omega_{HF} = \frac{(C_{HF} + C_{COMP})}{C_{HF} \times C_{COMP} \times R_{COMP}} \tag{50}$$

where

- A_{OL} = 10,000 (80 dB)
- $\omega_{BW} = 2\pi \times f_{BW}$
- $G_{EA(S)}$ is the ideal error amplifier gain, which is modified at DC and high frequency by the open loop gain of the amplifier and the feedback divider ratio.

7.2.3 Application Curves

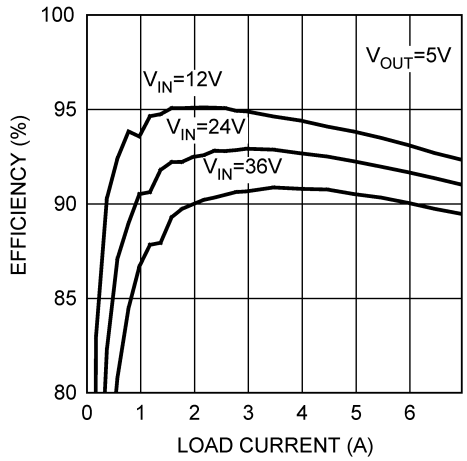

图 7-8. Efficiency With 6-µH Copper Inductor

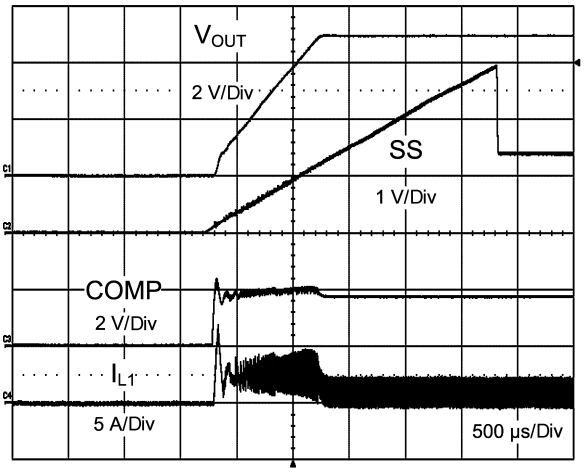

图 7-9. Short Circuit Recovery Into Resistive Load With C7 = 1 µF and D2 Installed

7.3 Power Supply Recommendations

The LM25116 is a power management device. The power supply for the device is any DC voltage.

7.4 Layout

7.4.1 Layout Guidelines

In a buck regulator the primary switching loop consists of the input capacitor, MOSFETs and current sense resistor. Minimizing the area of this loop reduces the stray inductance and minimizes noise and possible erratic operation. The input capacitor must be placed as close as possible to the MOSFETs, with the VIN side of the capacitor connected directly to the high-side MOSFET drain, and the GND side of the capacitor connected as close as possible to the low-side source or current sense resistor ground connection. A ground plane in the PC board is recommended as a means to connect the quiet end (input voltage ground side) of the input filter capacitors to the output filter capacitors and the PGND pin of the regulator. Connect all of the low power ground connections (C_{SS}, R_T, C_{RAMP}) directly to the regulator AGND pin. Connect the AGND and PGND pins together through to a topside copper area covering the entire underside of the device. Place several vias in this underside copper area to the ground plane.

The highest power dissipating components are the two power MOSFETs. The easiest way to determine the power dissipated in the MOSFETs is to measure the total conversion losses (P_{IN} – P_{OUT}), then subtract the power losses in the output inductor and any snubber resistors. The resulting power losses are primarily in the switching MOSFETs.

If a snubber is used, the power loss can be estimated with an oscilloscope by observation of the resistor voltage drop at both turnon and turnoff transitions. Assuming that the RC time constant is < 1 / f_{SW}.

$$P = C \times V^2 \times f_{SW} \tag{51}$$

The regulator has an exposed thermal pad to aid power dissipation. Selecting MOSFETs with exposed pads aid the power dissipation of these devices. Careful attention to $R_{DS(ON)}$ at high temperature must be observed. Also, at 250 kHz, a MOSFET with low gate capacitance result in lower switching losses.

7.4.2 Layout Example

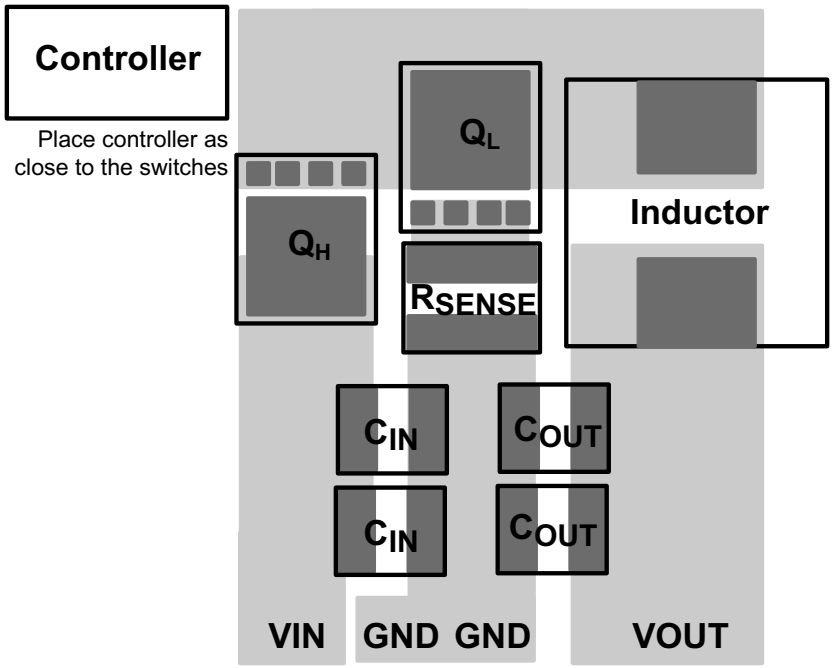

图 7-10. LM25116 Layout Example

Copyright © 2023 Texas Instruments Incorporated

8 Device and Documentation Support

8.1 接收文档更新通知

要接收文档更新通知，请导航至 ti.com 上的器件产品文件夹。点击*通知* 进行注册，即可每周接收产品信息更改摘要。有关更改的详细信息，请查看任何已修订文档中包含的修订历史记录。

8.2 支持资源

TI E2E™ 中文支持论坛是工程师的重要参考资料，可直接从专家处获得快速、经过验证的解答和设计帮助。搜索现有解答或提出自己的问题，获得所需的快速设计帮助。

链接的内容由各个贡献者“按原样”提供。这些内容并不构成 TI 技术规范，并且不一定反映 TI 的观点；请参阅 TI 的使用条款。

8.3 Trademarks

TI E2E™ is a trademark of Texas Instruments.
所有商标均为其各自所有者的财产。

8.4 静电放电警告

静电放电 (ESD) 会损坏这个集成电路。德州仪器 (TI) 建议通过适当的预防措施处理所有集成电路。如果不遵守正确的处理和安装程序，可能会损坏集成电路。

ESD 的损坏小至导致微小的性能降级，大至整个器件故障。精密的集成电路可能更容易受到损坏，这是因为非常细微的参数更改都可能会导致器件与其发布的规格不相符。

8.5 术语表

TI 术语表	本术语表列出并解释了术语、首字母缩略词和定义。

9 Revision History

注：以前版本的页码可能与当前版本的页码不同

Changes from Revision E (August 2016) to Revision F (November 2023)	Page
• 向*特性* 部分添加了新款类似产品的简介	1
• 更新了整个文档的表、图和交叉参考的编号格式	1
• 向*说明* 部分添加了新款类似产品的简介	1
• 更改了“封装尺寸”的英文表达并向*封装信息* 表添加了表注	1

Changes from Revision D (February 2013) to Revision E (August 2016)	Page
• 添加了 *ESD 等级* 表、*特性说明* 部分、*器件功能模式*、*应用和实施* 部分、*电源相关建议* 部分、*布局* 部分、*器件和文档支持* 部分以及*机械*、*封装和可订购信息* 部分	1
• Changed $R_{\theta JA}$ value from 40 to 40.6 in the *Thermal Information* table	6
• Changed θ_{JC} value from 4 to 20.9 ($R_{\theta JC(top)}$) and 1.7 ($R_{\theta JC(bot)}$) in the *Thermal Information* table	6

Changes from Revision C (February 2013) to Revision D (February 2013)	Page
• 将美国国家半导体数据表的布局更改成了 TI 格式	1

10 Mechanical, Packaging, and Orderable Information

The following pages include mechanical, packaging, and orderable information. This information is the most current data available for the designated devices. This data is subject to change without notice and revision of this document. For browser-based versions of this data sheet, refer to the left-hand navigation.

Copyright © 2023 Texas Instruments Incorporated

PACKAGING INFORMATION

Orderable Device	Status (1)	Package Type	Package Drawing	Pins	Package Qty	Eco Plan (2)	Lead finish/ Ball material (6)	MSL Peak Temp (3)	Op Temp (°C)	Device Marking (4/5)	Samples
LM25116MH	LIFEBUY	HTSSOP	PWP	20	73	Non-RoHS & Green	Call TI	Level-1-260C-UNLIM	-40 to 125	LM25116 MH	
LM25116MH/NOPB	ACTIVE	HTSSOP	PWP	20	73	RoHS & Green	SN	Level-1-260C-UNLIM	-40 to 125	LM25116 MH	Samples
LM25116MHX/NOPB	ACTIVE	HTSSOP	PWP	20	2500	RoHS & Green	SN	Level-1-260C-UNLIM	-40 to 125	LM25116 MH	Samples

(1) The marketing status values are defined as follows:
ACTIVE: Product device recommended for new designs.
LIFEBUY: TI has announced that the device will be discontinued, and a lifetime-buy period is in effect.
NRND: Not recommended for new designs. Device is in production to support existing customers, but TI does not recommend using this part in a new design.
PREVIEW: Device has been announced but is not in production. Samples may or may not be available.
OBSOLETE: TI has discontinued the production of the device.

(2) **RoHS:** TI defines "RoHS" to mean semiconductor products that are compliant with the current EU RoHS requirements for all 10 RoHS substances, including the requirement that RoHS substance do not exceed 0.1% by weight in homogeneous materials. Where designed to be soldered at high temperatures, "RoHS" products are suitable for use in specified lead-free processes. TI may reference these types of products as "Pb-Free".
RoHS Exempt: TI defines "RoHS Exempt" to mean products that contain lead but are compliant with EU RoHS pursuant to a specific EU RoHS exemption.
Green: TI defines "Green" to mean the content of Chlorine (Cl) and Bromine (Br) based flame retardants meet JS709B low halogen requirements of <=1000ppm threshold. Antimony trioxide based flame retardants must also meet the <=1000ppm threshold requirement.

(3) MSL, Peak Temp. - The Moisture Sensitivity Level rating according to the JEDEC industry standard classifications, and peak solder temperature.

(4) There may be additional marking, which relates to the logo, the lot trace code information, or the environmental category on the device.

(5) Multiple Device Markings will be inside parentheses. Only one Device Marking contained in parentheses and separated by a "~" will appear on a device. If a line is indented then it is a continuation of the previous line and the two combined represent the entire Device Marking for that device.

(6) Lead finish/Ball material - Orderable Devices may have multiple material finish options. Finish options are separated by a vertical ruled line. Lead finish/Ball material values may wrap to two lines if the finish value exceeds the maximum column width.

Important Information and Disclaimer: The information provided on this page represents TI's knowledge and belief as of the date that it is provided. TI bases its knowledge and belief on information provided by third parties, and makes no representation or warranty as to the accuracy of such information. Efforts are underway to better integrate information from third parties. TI has taken and continues to take reasonable steps to provide representative and accurate information but may not have conducted destructive testing or chemical analysis on incoming materials and chemicals. TI and TI suppliers consider certain information to be proprietary, and thus CAS numbers and other limited information may not be available for release.

In no event shall TI's liability arising out of such information exceed the total purchase price of the TI part(s) at issue in this document sold by TI to Customer on an annual basis.

TAPE AND REEL INFORMATION

REEL DIMENSIONS

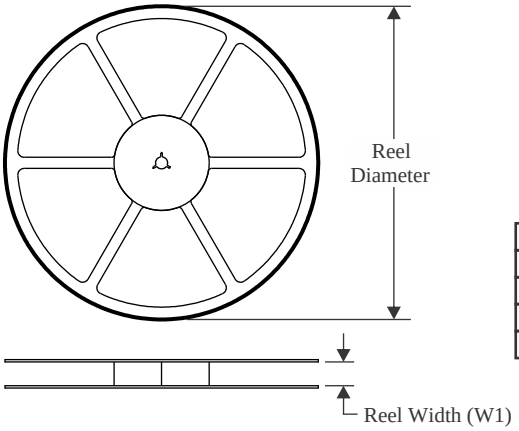

TAPE DIMENSIONS

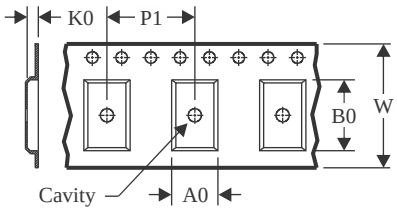

A0	Dimension designed to accommodate the component width
B0	Dimension designed to accommodate the component length
K0	Dimension designed to accommodate the component thickness
W	Overall width of the carrier tape
P1	Pitch between successive cavity centers

QUADRANT ASSIGNMENTS FOR PIN 1 ORIENTATION IN TAPE

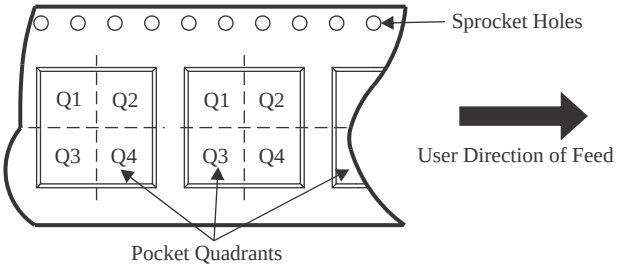

*All dimensions are nominal

Device	Package Type	Package Drawing	Pins	SPQ	Reel Diameter (mm)	Reel Width W1 (mm)	A0 (mm)	B0 (mm)	K0 (mm)	P1 (mm)	W (mm)	Pin1 Quadrant
LM25116MHX/NOPB	HTSSOP	PWP	20	2500	330.0	16.4	6.95	7.0	1.4	8.0	16.0	Q1

TAPE AND REEL BOX DIMENSIONS

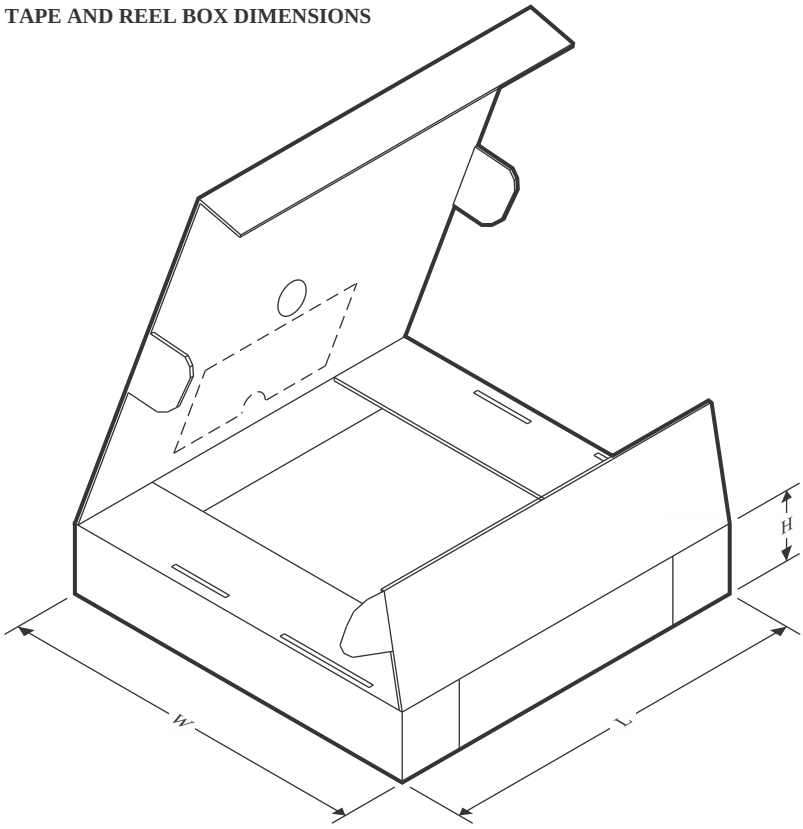

*All dimensions are nominal

Device	Package Type	Package Drawing	Pins	SPQ	Length (mm)	Width (mm)	Height (mm)
LM25116MHX/NOPB	HTSSOP	PWP	20	2500	367.0	367.0	35.0

TUBE

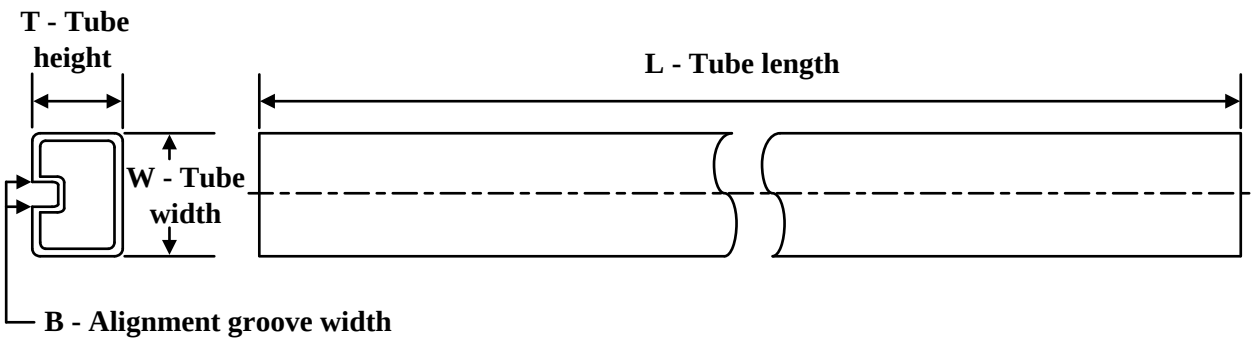

*All dimensions are nominal

Device	Package Name	Package Type	Pins	SPQ	L (mm)	W (mm)	T (µm)	B (mm)
LM25116MH	PWP	HTSSOP	20	73	495	8	2514.6	4.06
LM25116MH	PWP	HTSSOP	20	73	495	8	2514.6	4.06
LM25116MH/NOPB	PWP	HTSSOP	20	73	495	8	2514.6	4.06

PWP0020A

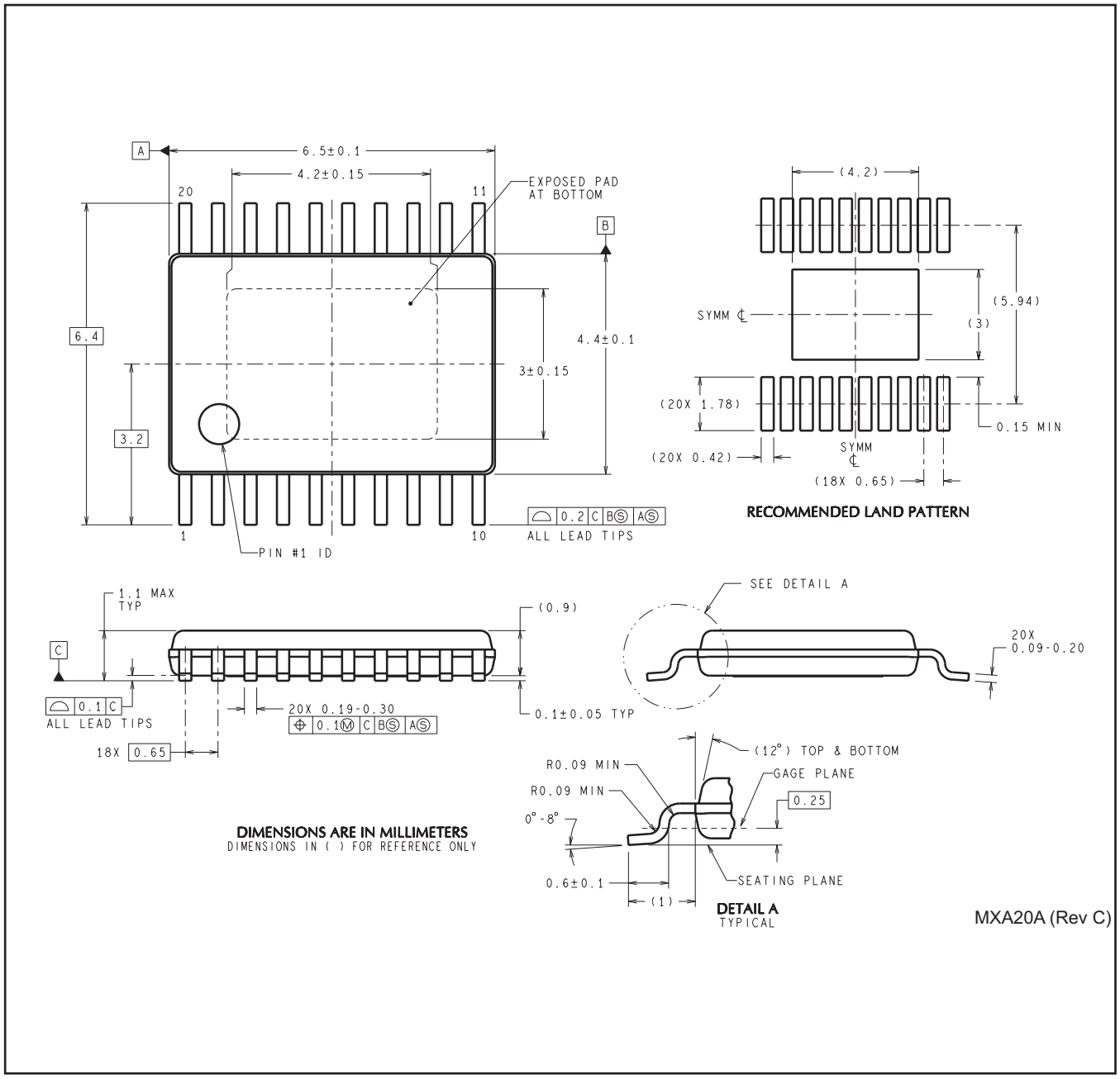
A
6.5±0.1
4.2±0.15
20
11
EXPOSED PAD
AT BOTTOM
B
6.4
4.4±0.1
3±0.15
3.2
1
10
PIN #1 ID
0.2 C B S A S
ALL LEAD TIPS
(4.2)
(5.94)
SYMM ℄
(3)
(20X 1.78)
0.15 MIN
(20X 0.42)
SYMM
℄
(18X 0.65)
RECOMMENDED LAND PATTERN
1.1 MAX
TYP
(0.9)
C
0.1 C
ALL LEAD TIPS
20X 0.19-0.30
0.1 M C B S A S
18X 0.65
0.1±0.05 TYP
SEE DETAIL A
20X
0.09-0.20
(12°) TOP & BOTTOM
R0.09 MIN
GAGE PLANE
R0.09 MIN
0.25
0°-8°
0.6±0.1
SEATING PLANE
(1)
DETAIL A
TYPICAL
DIMENSIONS ARE IN MILLIMETERS
DIMENSIONS IN ( ) FOR REFERENCE ONLY
MXA20A (Rev C)

重要声明和免责声明

TI“按原样”提供技术和可靠性数据（包括数据表）、设计资源（包括参考设计）、应用或其他设计建议、网络工具、安全信息和其他资源，不保证没有瑕疵且不做出任何明示或暗示的担保，包括但不限于对适销性、某特定用途方面的适用性或不侵犯任何第三方知识产权的暗示担保。

这些资源可供使用 TI 产品进行设计的熟练开发人员使用。您将自行承担以下全部责任：(1) 针对您的应用选择合适的 TI 产品，(2) 设计、验证并测试您的应用，(3) 确保您的应用满足相应标准以及任何其他功能安全、信息安全、监管或其他要求。

这些资源如有变更，恕不另行通知。TI 授权您仅可将这些资源用于研发本资源所述的 TI 产品的应用。严禁对这些资源进行其他复制或展示。您无权使用任何其他 TI 知识产权或任何第三方知识产权。您应全额赔偿因在这些资源的使用中对 TI 及其代表造成的任何索赔、损害、成本、损失和债务，TI 对此概不负责。

TI 提供的产品受 TI 的销售条款或 ti.com 上其他适用条款/TI 产品随附的其他适用条款的约束。TI 提供这些资源并不会扩展或以其他方式更改 TI 针对 TI 产品发布的适用的担保或担保免责声明。

TI 反对并拒绝您可能提出的任何其他或不同的条款。

邮寄地址：Texas Instruments, Post Office Box 655303, Dallas, Texas 75265
Copyright © 2024，德州仪器 (TI) 公司