REVISIONS				
ZONE	LTR	DESCRIPTION	DATE	APPROVED

THIS DRAWING IS INTENDED TO HELP IN THE ASSEMBLY OF THE DESIGN.

1. REFER TO ODB++ FILE FOR SPECIFIC COMPONENT LOCATION INFORMATION.
2. FINISHED BOARD SHALL BE RoHS COMPLIANT.
3. 2 RF SHIELDS ARE REQUIRED PER BOARD.

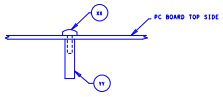

DETAIL A (SIDE VIEW) - NO SCALE
INSTALL SPACERS (YY) AND SCREWS (XX) AS SHOWN.

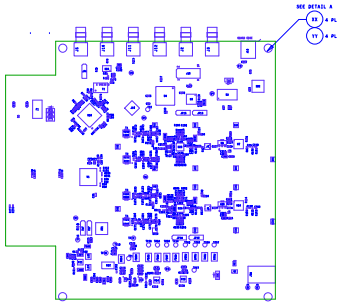

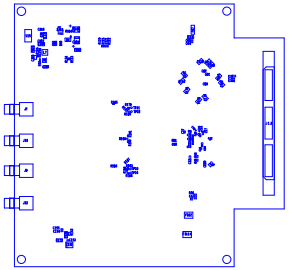

BOTTOM SIDE

UNLESS OTHERWISE SPECIFIED DIMENSIONS ARE IN INCHES TOLERANCES ARE: FRACTIONS +/- DECIMALS .XX +/-.01 .XXX +/-.005 ANGLES +/-	CONTRACT NO.	TEXAS INSTRUMENTS INC.
MATERIAL SEE NOTE 5	APPROVALS / DATE DRAWN L. NGUYEN 09-29-11 ENGR K. HSIA	ASSEMBLY DRAWING TSW3084EVM
FINISH SEE NOTES 7, 8, 9		SIZE B · CODE IDENT NO. · DRAWING NO. · REV. B
DO NOT SCALE DRAWING		SCALE NONE · SHEET 1 OF 1