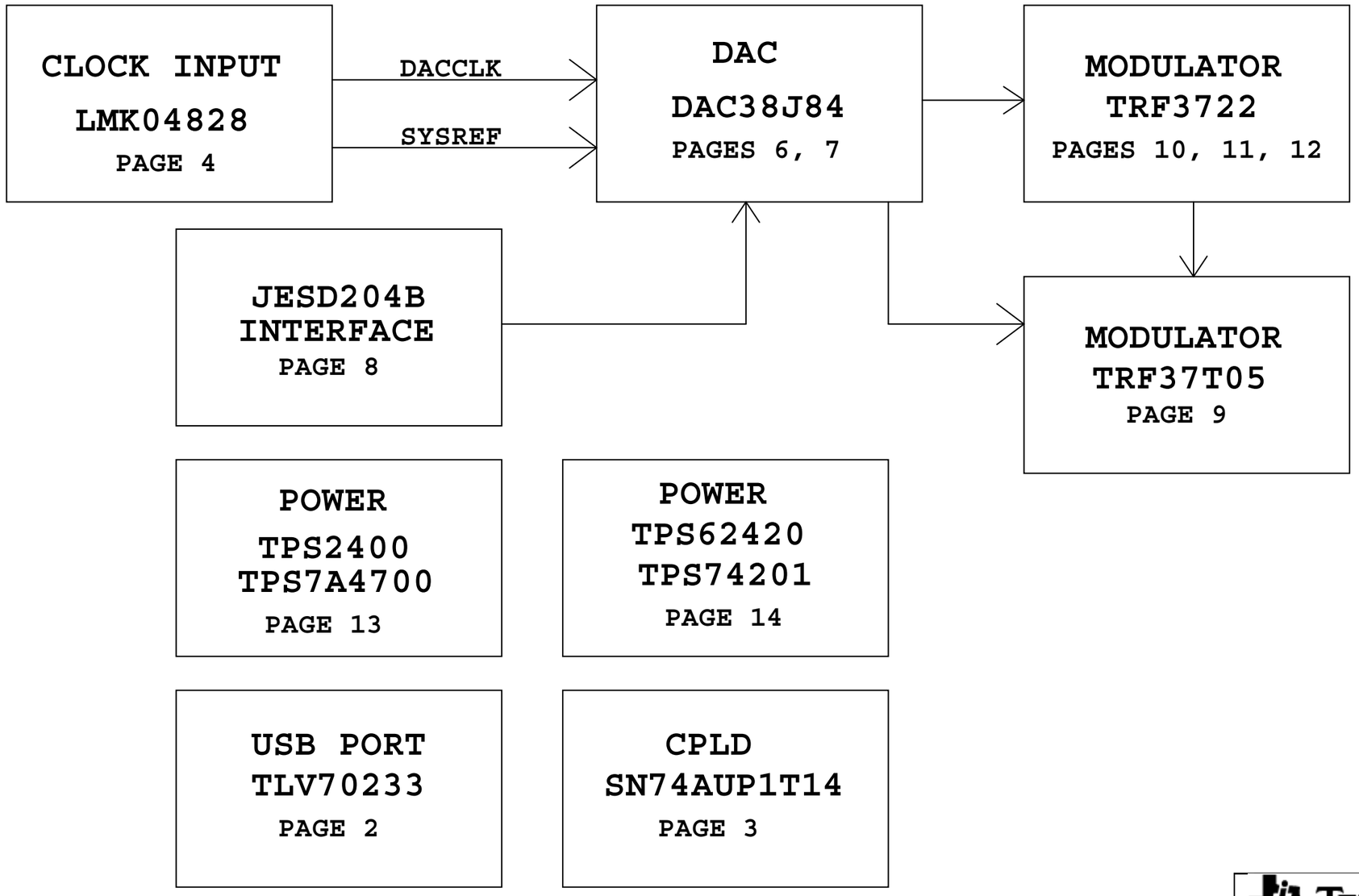

TEXAS INSTRUMENTS

Title	BLOCK DIAGRAM		
Drawn: JV SMITH 02/13	Size B	Document Number TSW38J84 EVM	Rev B
Engineer: M GUIBORD 02/13	Date: Thursday, April 03, 2014	Sheet 1 of 14	

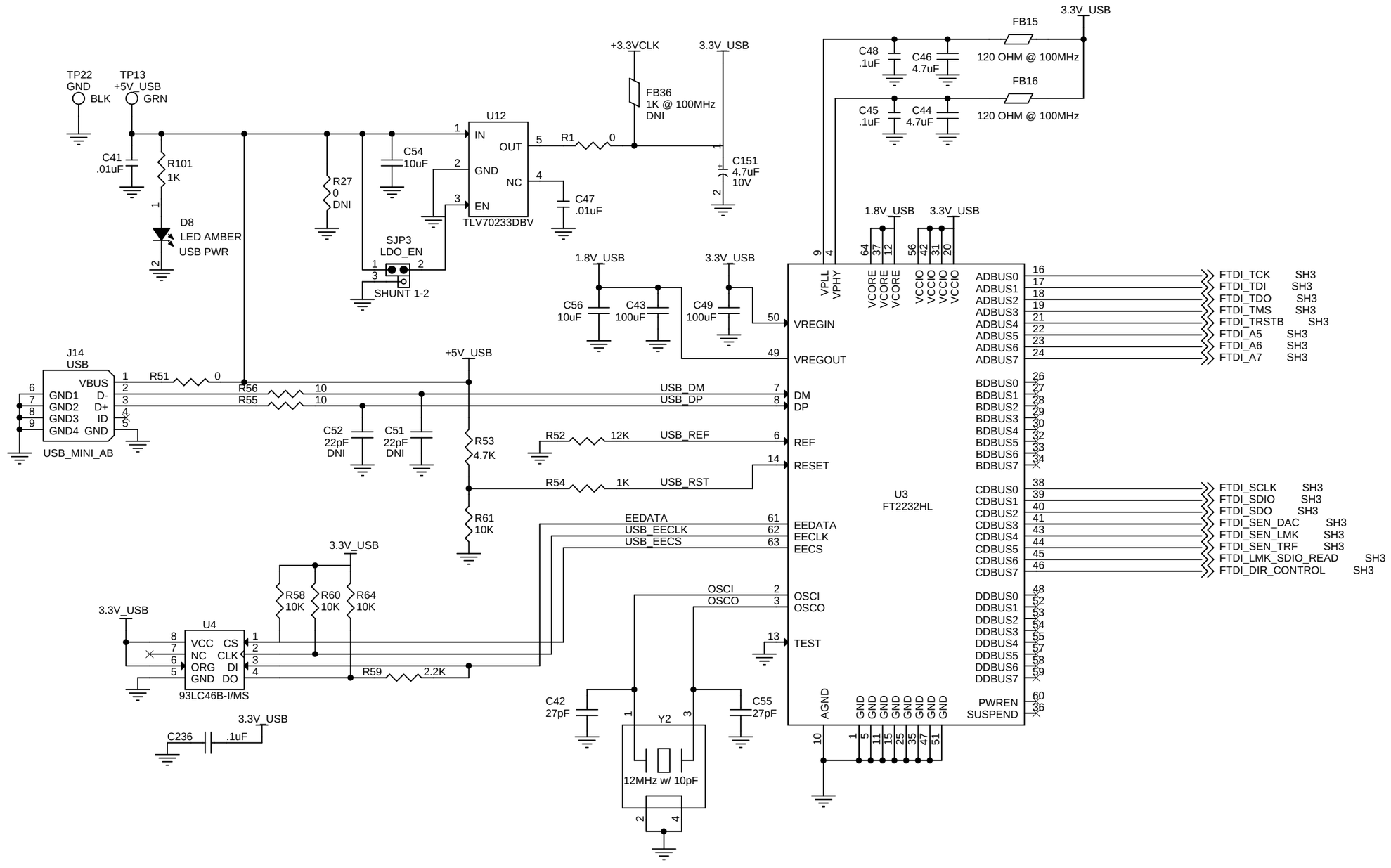

TEXAS INSTRUMENTS

Title	USB INTERFACE	
Size B	Document Number TSW38J84 EVM	Rev B
Date: Thursday, April 03, 2014	Sheet 2 of 14	

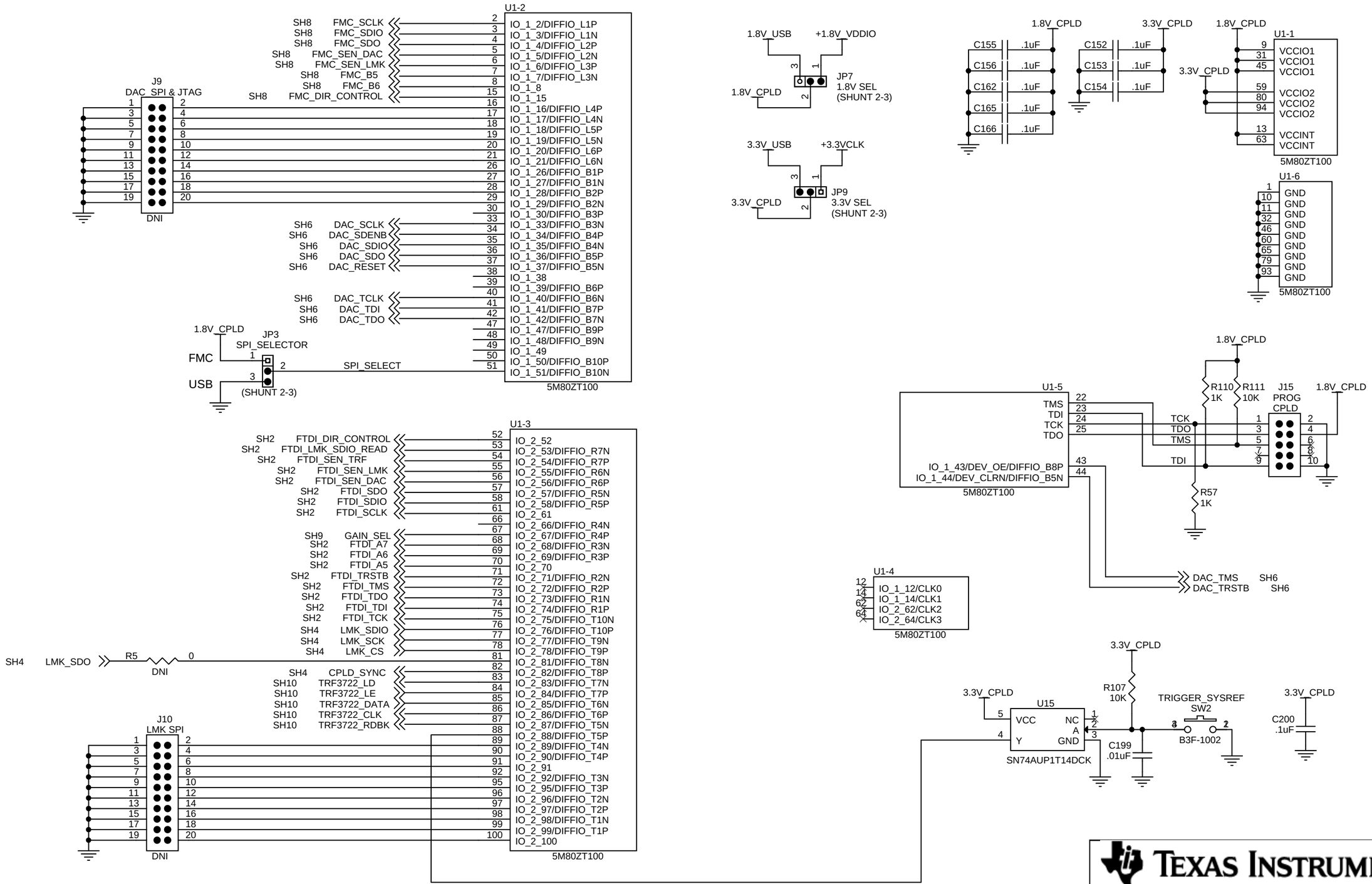

TEXAS INSTRUMENTS

Title: CPLD

Size: B | Document Number: TSW38J84 EVM | Rev: B

Date: Thursday, April 03, 2014 | Sheet 3 of 14

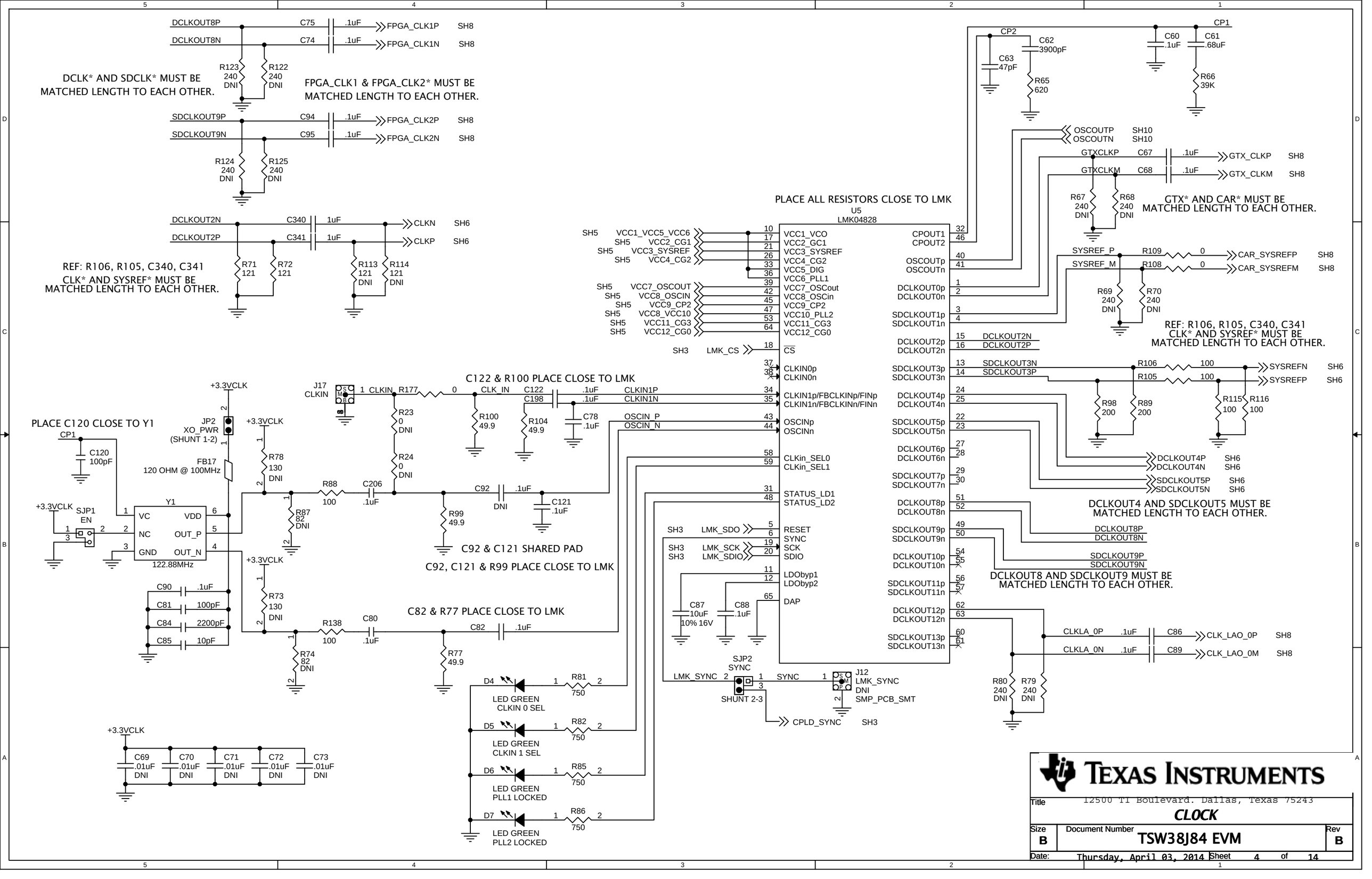
DCLKOUT8P C75 .1uF FPGA_CLK1P SH8
DCLKOUT8N C74 .1uF FPGA_CLK1N SH8
R123 240 DNI
R122 240 DNI
DCLK* AND SDCLK* MUST BE MATCHED LENGTH TO EACH OTHER.
FPGA_CLK1 & FPGA_CLK2* MUST BE MATCHED LENGTH TO EACH OTHER.
SDCLKOUT9P C94 .1uF FPGA_CLK2P SH8
SDCLKOUT9N C95 .1uF FPGA_CLK2N SH8
R124 240 DNI
R125 240 DNI
DCLKOUT2N C340 1uF CLKN SH6
DCLKOUT2P C341 1uF CLKP SH6
R71 121
R72 121
R113 121 DNI
R114 121 DNI
REF: R106, R105, C340, C341
CLK* AND SYSREF* MUST BE MATCHED LENGTH TO EACH OTHER.
PLACE ALL RESISTORS CLOSE TO LMK
U5
LMK04828
CP2
C62 3900pF
C63 47pF
R65 620
C60 .1uF
C61 .68uF
CP1
R66 39K
OSCOUTP SH10
OSCOUTN SH10
GTXCLKP C67 .1uF GTX_CLKP SH8
GTXCLKM C68 .1uF GTX_CLKM SH8
R67 240 DNI
R68 240 DNI
GTX* AND CAR* MUST BE MATCHED LENGTH TO EACH OTHER.
SYSREF_P R109 0 CAR_SYSREFP SH8
SYSREF_M R108 0 CAR_SYSREFM SH8
R69 240 DNI
R70 240 DNI
REF: R106, R105, C340, C341
CLK* AND SYSREF* MUST BE MATCHED LENGTH TO EACH OTHER.
SH5 VCC1_VCC5_VCC6 10
SH5 VCC2_CG1 17
SH5 VCC3_SYSREF 21
SH5 VCC4_CG2 26
33 VCC5_DIG
36 VCC6_PLL1
SH5 VCC7_OSCout 39
SH5 VCC8_OSCin 42
SH5 VCC9_CP2 45
SH5 VCC8_VCC10 47
SH5 VCC11_CG3 53
SH5 VCC12_CG0 64
SH3 LMK_CS 18 CS
CPOUT1 32
CPOUT2 46
OSCOUTp 40
OSCOUTn 41
DCLKOUT0p 1
DCLKOUT0n 2
SDCLKOUT1p 3
SDCLKOUT1n 4
DCLKOUT2p 15 DCLKOUT2N
DCLKOUT2n 16 DCLKOUT2P
SDCLKOUT3p 13 SDCLKOUT3N
SDCLKOUT3n 14 SDCLKOUT3P
DCLKOUT4p 24
DCLKOUT4n 25
SDCLKOUT5p 22
SDCLKOUT5n 23
DCLKOUT6p 27
DCLKOUT6n 28
SDCLKOUT7p 29
SDCLKOUT7n 30
DCLKOUT8p 51
DCLKOUT8n 52
SDCLKOUT9p 49
SDCLKOUT9n 50
DCLKOUT10p 54
DCLKOUT10n 55
SDCLKOUT11p 56
SDCLKOUT11n 57
DCLKOUT12p 62
DCLKOUT12n 63
SDCLKOUT13p 60
SDCLKOUT13n 61
R106 100 SYSREFN SH6
R105 100 SYSREFP SH6
R98 200
R89 200
R115 100
R116 100
DCLKOUT4P SH6
DCLKOUT4N SH6
SDCLKOUT5P SH6
SDCLKOUT5N SH6
DCLKOUT4 AND SDCLKOUT5 MUST BE MATCHED LENGTH TO EACH OTHER.
DCLKOUT8P
DCLKOUT8N
SDCLKOUT9P
SDCLKOUT9N
DCLKOUT8 AND SDCLKOUT9 MUST BE MATCHED LENGTH TO EACH OTHER.
CLKLA_0P .1uF C86 CLK_LAO_0P SH8
CLKLA_0N .1uF C89 CLK_LAO_0M SH8
R80 240 DNI
R79 240 DNI
C122 & R100 PLACE CLOSE TO LMK
J17 CLKIN
1 CLKIN R177 0 CLK_IN C122 .1uF CLKIN1P 34
C198 .1uF CLKIN1N 35
CLKIN0p 37
CLKIN0n 38
CLKIN1p/FBCLKINp/FINp
CLKIN1n/FBCLKINn/FINn
OSCIN_P 43
OSCIN_N 44
OSCINp
OSCINn
R23 0 DNI
R24 0 DNI
R100 49.9
R104 49.9
C78 .1uF
CLKin_SEL0 58
CLKin_SEL1 59
STATUS_LD1 31
STATUS_LD2 48
SH3 LMK_SDO 5 RESET
6 SYNC
SH3 LMK_SCK 19 SCK
SH3 LMK_SDIO 20 SDIO
11 LDObyp1
12 LDObyp2
65 DAP
C87 10uF 10% 16V
C88 .1uF
SJP2 SYNC
LMK_SYNC 2
1 SYNC 1
3
SHUNT 2-3
J12 LMK_SYNC DNI SMP_PCB_SMT
CPLD_SYNC SH3
PLACE C120 CLOSE TO Y1
CP1
C120 100pF
+3.3VCLK
JP2 XO_PWR (SHUNT 1-2)
FB17 120 OHM @ 100MHz
SJP1 EN
Y1
VC VDD
NC OUT_P
GND OUT_N
122.88MHz
R78 130 DNI
R88 100
C206 .1uF
R87 82 DNI
C92 .1uF
DNI
C121 .1uF
R99 49.9
C92 & C121 SHARED PAD
C92, C121 & R99 PLACE CLOSE TO LMK
C90 .1uF
C81 100pF
C84 2200pF
C85 10pF
R73 130 DNI
R138 100
C80 .1uF
C82 .1uF
R74 82 DNI
R77 49.9
C82 & R77 PLACE CLOSE TO LMK
D4 LED GREEN CLKIN 0 SEL R81 750
D5 LED GREEN CLKIN 1 SEL R82 750
D6 LED GREEN PLL1 LOCKED R85 750
D7 LED GREEN PLL2 LOCKED R86 750
C69 .01uF DNI
C70 .01uF DNI
C71 .01uF DNI
C72 .01uF DNI
C73 .01uF DNI
TEXAS INSTRUMENTS
12500 TI Boulevard, Dallas, Texas 75243
Title
CLOCK
Size B
Document Number TSW38J84 EVM
Rev B
Date: Thursday, April 03, 2014
Sheet 4 of 14

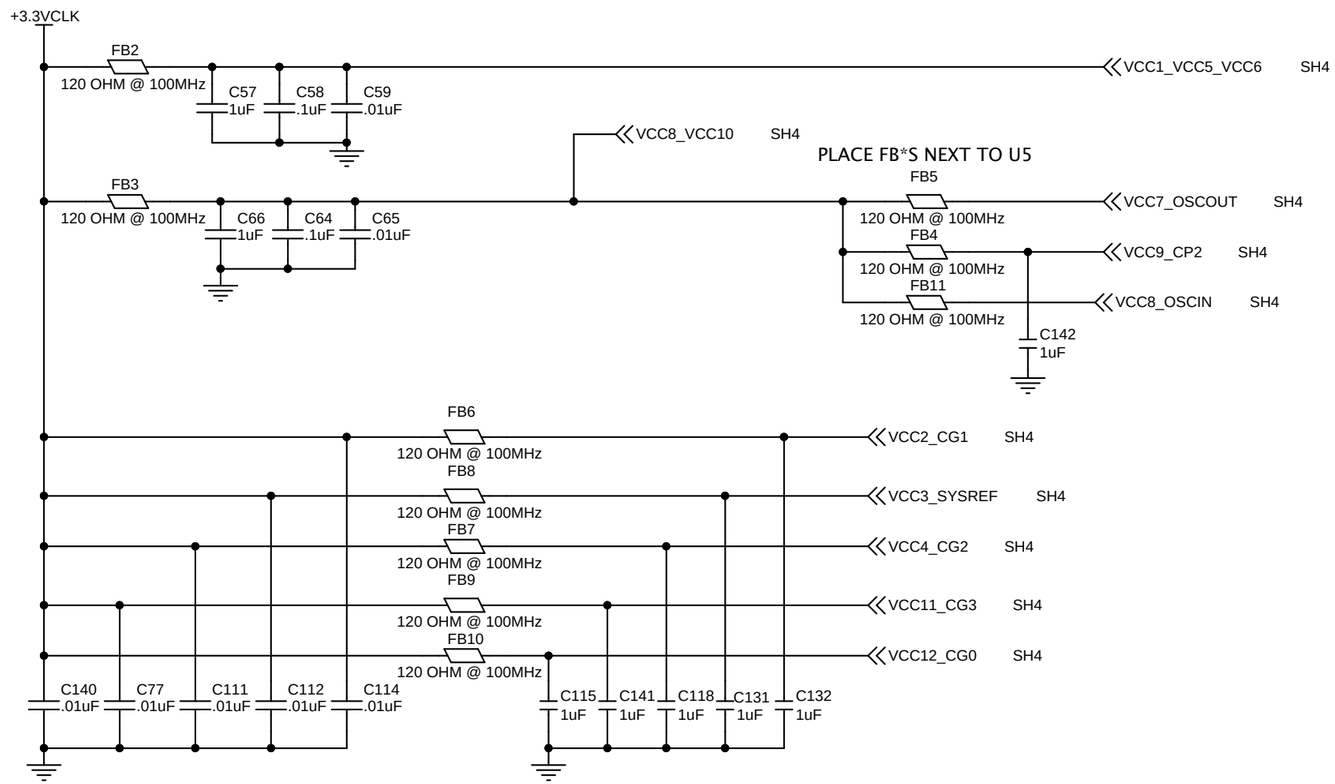

TEXAS INSTRUMENTS

Title	LMK POWER	
Size B	Document Number TSW38J05 EVM	Rev B
Date: Thursday, April 03, 2014	Sheet 5 of 14	

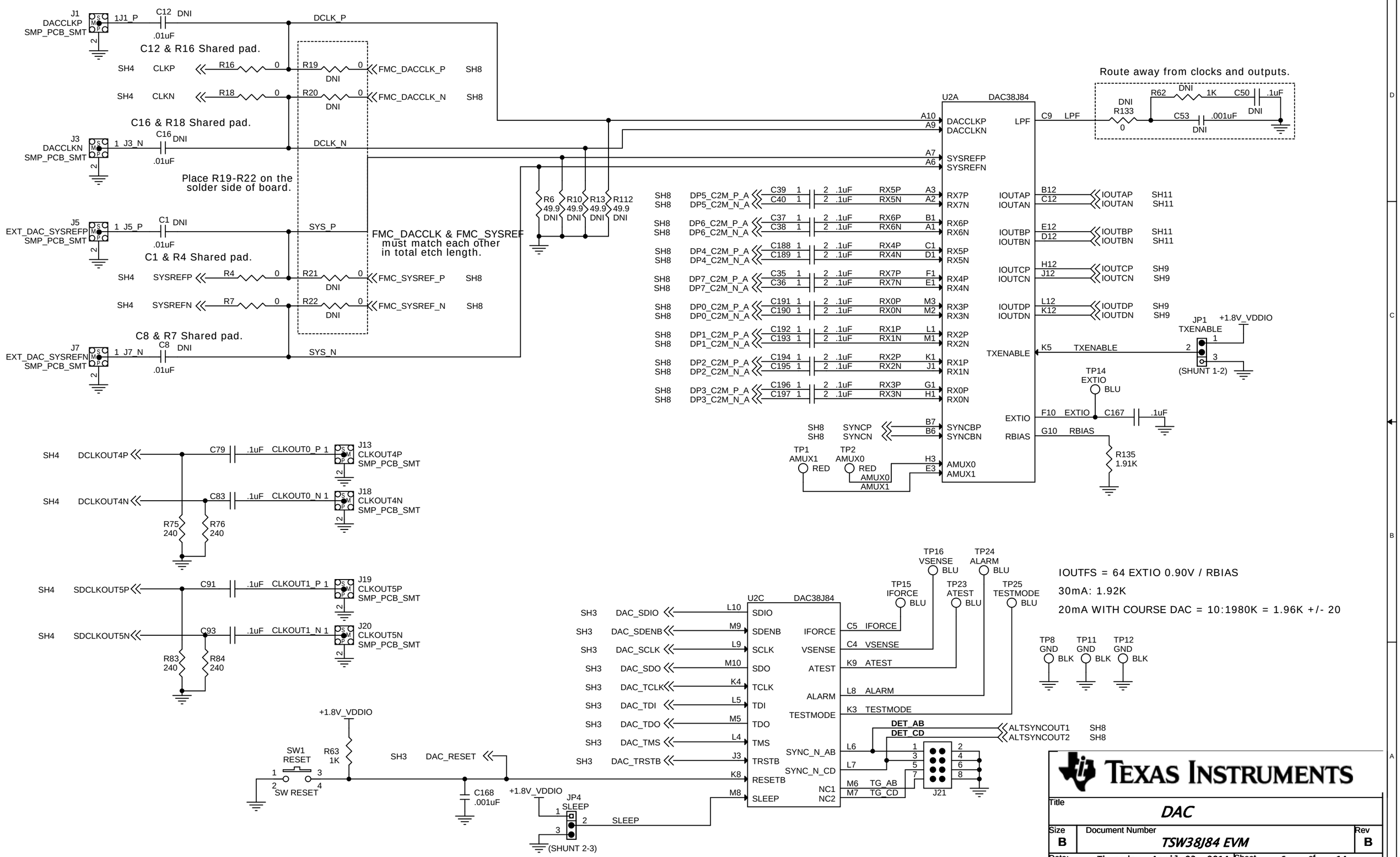
J1 DACCLKP SMP_PCB_SMT
1J1_P
C12 DNI .01uF
DCLK_P
C12 & R16 Shared pad.
SH4 CLKP R16 0 R19 0 DNI FMC_DACCLK_P SH8
SH4 CLKN R18 0 R20 0 DNI FMC_DACCLK_N SH8
C16 & R18 Shared pad.
J3 DACCLKN SMP_PCB_SMT
1 J3_N C16 DNI .01uF
DCLK_N
Place R19-R22 on the solder side of board.
J5 EXT_DAC_SYSREFP SMP_PCB_SMT
1 J5_P C1 DNI .01uF
SYS_P
C1 & R4 Shared pad.
SH4 SYSREFP R4 0 R21 0 DNI FMC_SYSREF_P SH8
SH4 SYSREFN R7 0 R22 0 DNI FMC_SYSREF_N SH8
FMC_DACCLK & FMC_SYSREF must match each other in total etch length.
C8 & R7 Shared pad.
J7 EXT_DAC_SYSREFN SMP_PCB_SMT
1 J7_N C8 DNI .01uF
SYS_N
R6 49.9 DNI
R10 49.9 DNI
R13 49.9 DNI
R112 49.9 DNI
U2A DAC38J84
A10 DACCLKP
A9 DACCLKN
A7 SYSREFP
A6 SYSREFN
Route away from clocks and outputs.
C9 LPF
DNI R133 0
R62 DNI 1K
C50 .1uF DNI
C53 .001uF DNI
SH8 DP5_C2M_P_A C39 1 2 .1uF RX5P A3 RX7P
SH8 DP5_C2M_N_A C40 1 2 .1uF RX5N A2 RX7N
SH8 DP6_C2M_P_A C37 1 2 .1uF RX6P B1 RX6P
SH8 DP6_C2M_N_A C38 1 2 .1uF RX6N A1 RX6N
SH8 DP4_C2M_P_A C188 1 2 .1uF RX4P C1 RX5P
SH8 DP4_C2M_N_A C189 1 2 .1uF RX4N D1 RX5N
SH8 DP7_C2M_P_A C35 1 2 .1uF RX7P F1 RX4P
SH8 DP7_C2M_N_A C36 1 2 .1uF RX7N E1 RX4N
SH8 DP0_C2M_P_A C191 1 2 .1uF RX0P M3 RX3P
SH8 DP0_C2M_N_A C190 1 2 .1uF RX0N M2 RX3N
SH8 DP1_C2M_P_A C192 1 2 .1uF RX1P L1 RX2P
SH8 DP1_C2M_N_A C193 1 2 .1uF RX1N M1 RX2N
SH8 DP2_C2M_P_A C194 1 2 .1uF RX2P K1 RX1P
SH8 DP2_C2M_N_A C195 1 2 .1uF RX2N J1 RX1N
SH8 DP3_C2M_P_A C196 1 2 .1uF RX3P G1 RX0P
SH8 DP3_C2M_N_A C197 1 2 .1uF RX3N H1 RX0N
IOUTAP B12 C12 IOUTAN SH11
IOUTBP E12 D12 IOUTBN SH11
IOUTCP H12 J12 IOUTCN SH9
IOUTDP L12 K12 IOUTDN SH9
TXENABLE K5 TXENABLE
JP1 TXENABLE +1.8V_VDDIO (SHUNT 1-2)
TP14 EXTIO BLU
EXTIO F10 EXTIO C167 .1uF
RBIAS G10 RBIAS R135 1.91K
SH8 SYNCP B7 SYNCBP
SH8 SYNCN B6 SYNCBN
TP1 AMUX1 RED
TP2 AMUX0 RED
AMUX0 H3
AMUX1 E3
SH4 DCLKOUT4P C79 .1uF CLKOUT0_P 1 J13 CLKOUT4P SMP_PCB_SMT
SH4 DCLKOUT4N C83 .1uF CLKOUT0_N 1 J18 CLKOUT4N SMP_PCB_SMT
R75 240 R76 240
SH4 SDCLKOUT5P C91 .1uF CLKOUT1_P 1 J19 CLKOUT5P SMP_PCB_SMT
SH4 SDCLKOUT5N C93 .1uF CLKOUT1_N 1 J20 CLKOUT5N SMP_PCB_SMT
R83 240 R84 240
U2C DAC38J84
SH3 DAC_SDIO L10 SDIO
SH3 DAC_SDENB M9 SDENB
SH3 DAC_SCLK L9 SCLK
SH3 DAC_SDO M10 SDO
SH3 DAC_TCLK K4 TCLK
SH3 DAC_TDI L5 TDI
SH3 DAC_TDO M5 TDO
SH3 DAC_TMS L4 TMS
SH3 DAC_TRSTB J3 TRSTB
K8 RESETB
M8 SLEEP
IFORCE C5 IFORCE
VSENSE C4 VSENSE
ATEST K9 ATEST
ALARM L8 ALARM
TESTMODE K3 TESTMODE
SYNC_N_AB L6
SYNC_N_CD L7
NC1 M6 TG_AB
NC2 M7 TG_CD
TP16 VSENSE BLU
TP24 ALARM BLU
TP15 IFORCE BLU
TP23 ATEST BLU
TP25 TESTMODE BLU
IOUTFS = 64 EXTIO 0.90V / RBIAS
30mA: 1.92K
20mA WITH COURSE DAC = 10:1980K = 1.96K +/- 20
TP8 GND BLK
TP11 GND BLK
TP12 GND BLK
DET_AB
DET_CD
ALTSYNCOUT1 SH8
ALTSYNCOUT2 SH8
J21
+1.8V_VDDIO
SW1 RESET
R63 1K
SW RESET
SH3 DAC_RESET
C168 .001uF
JP4 SLEEP (SHUNT 2-3)
SLEEP
TEXAS INSTRUMENTS
Title DAC
Size B
Document Number TSW38J84 EVM
Rev B
Date: Thursday, April 03, 2014
Sheet 6 of 14

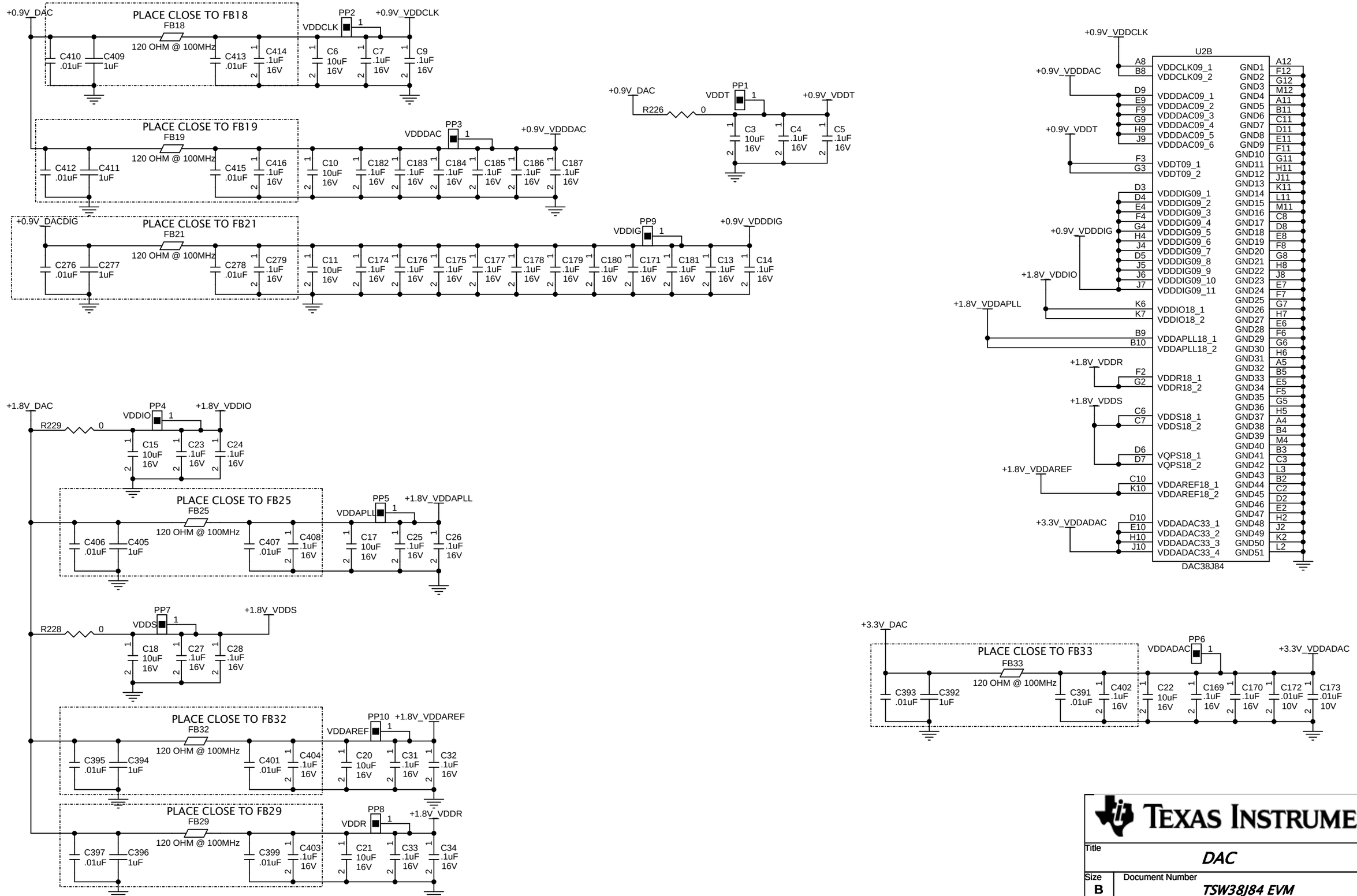

TEXAS INSTRUMENTS

Title	DAC	
Size B	Document Number TSW38J84 EVM	Rev B
Date: Wednesday, August 27, 2014	Sheet 7 of 14	

MATES W/ XILINX FMC CONNECTOR - J22

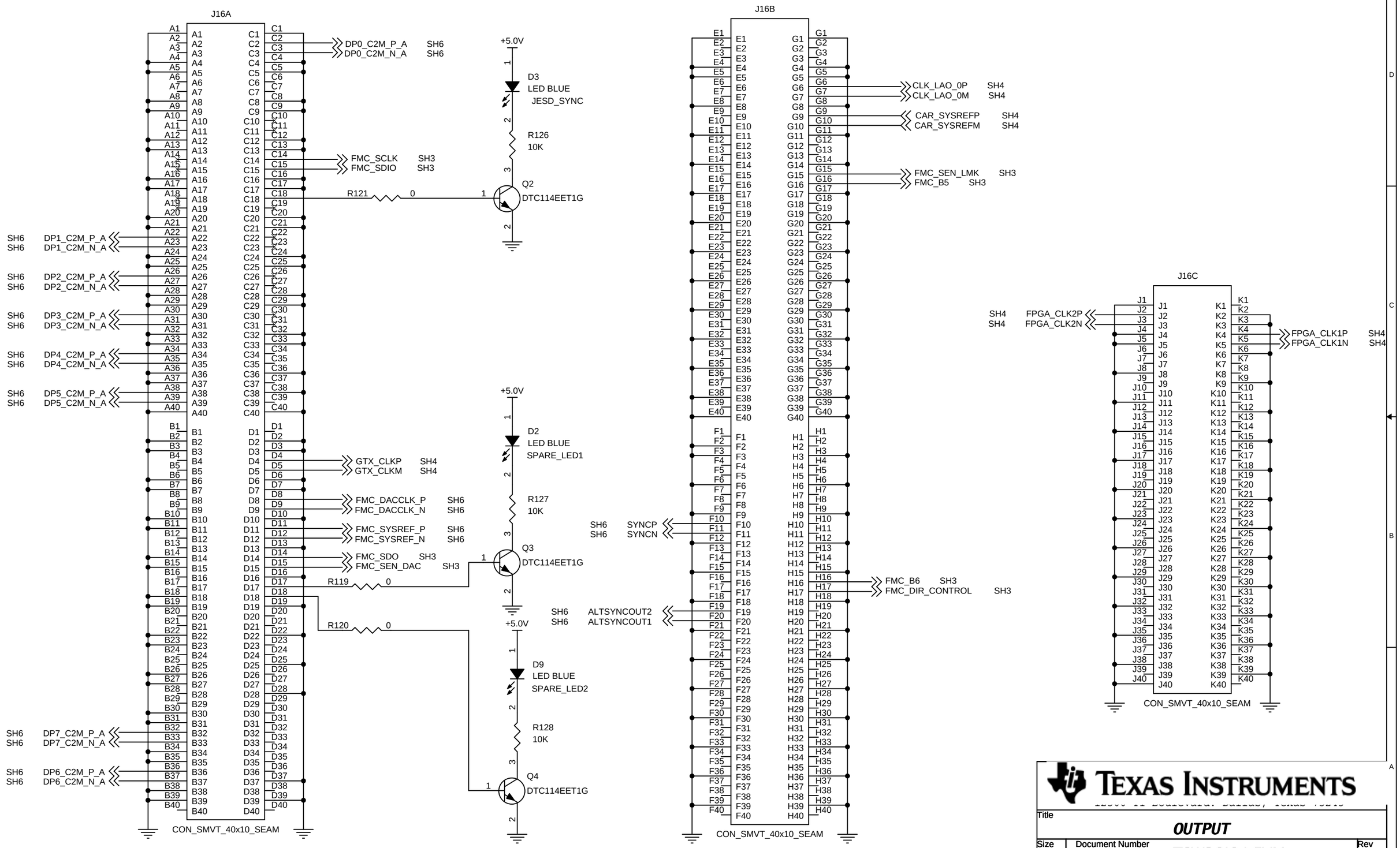

TEXAS INSTRUMENTS

Title	OUTPUT	
Size B	Document Number TSW38J84 EVM	Rev B
Date: Thursday, April 03, 2014	Sheet 8 of 14	

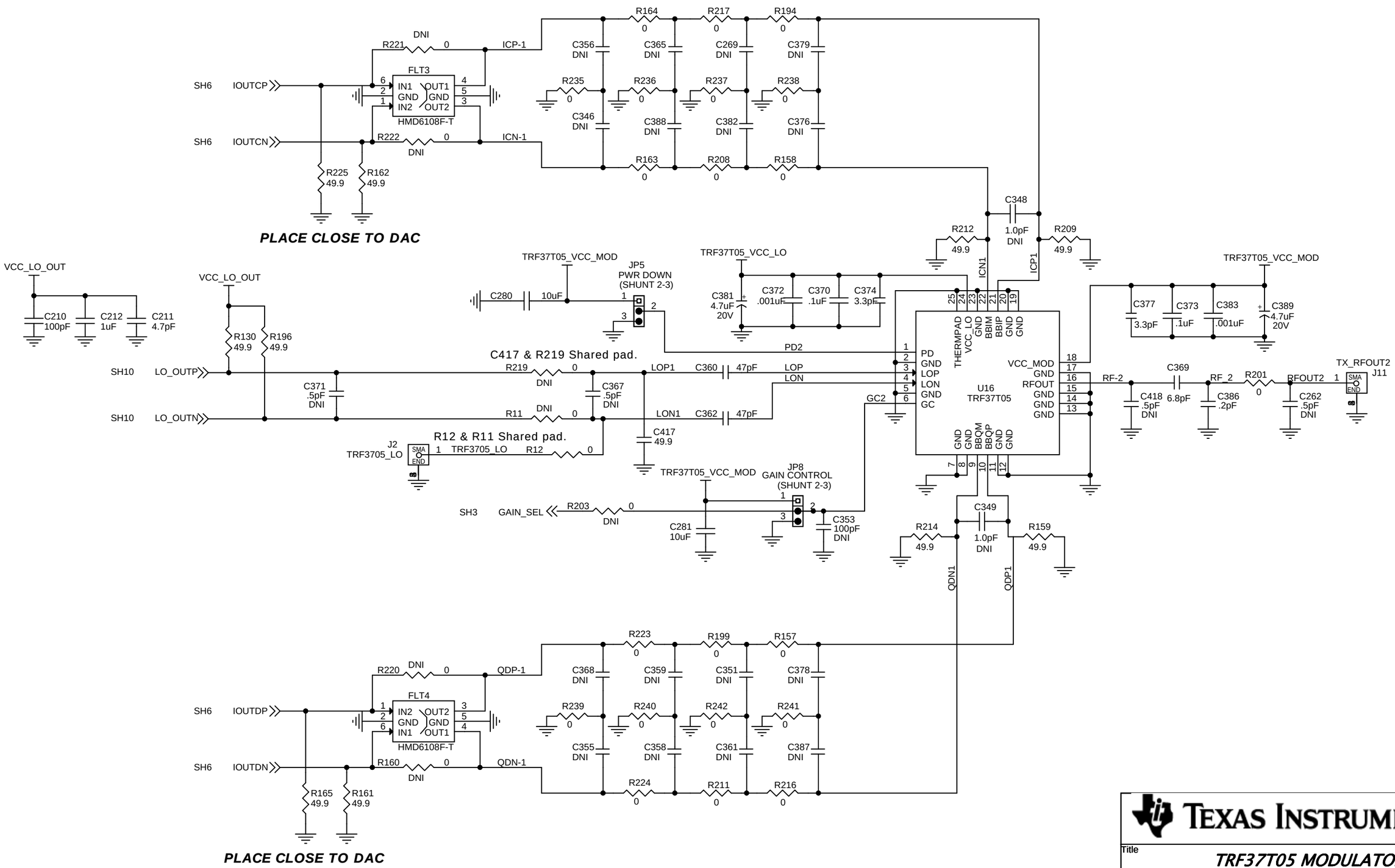

TEXAS INSTRUMENTS

Title	TRF37T05 MODULATOR	
Size B	Document Number TSW38J84 EVM	Rev B
Date: Friday, August 29, 2014	Sheet 9 of 14	

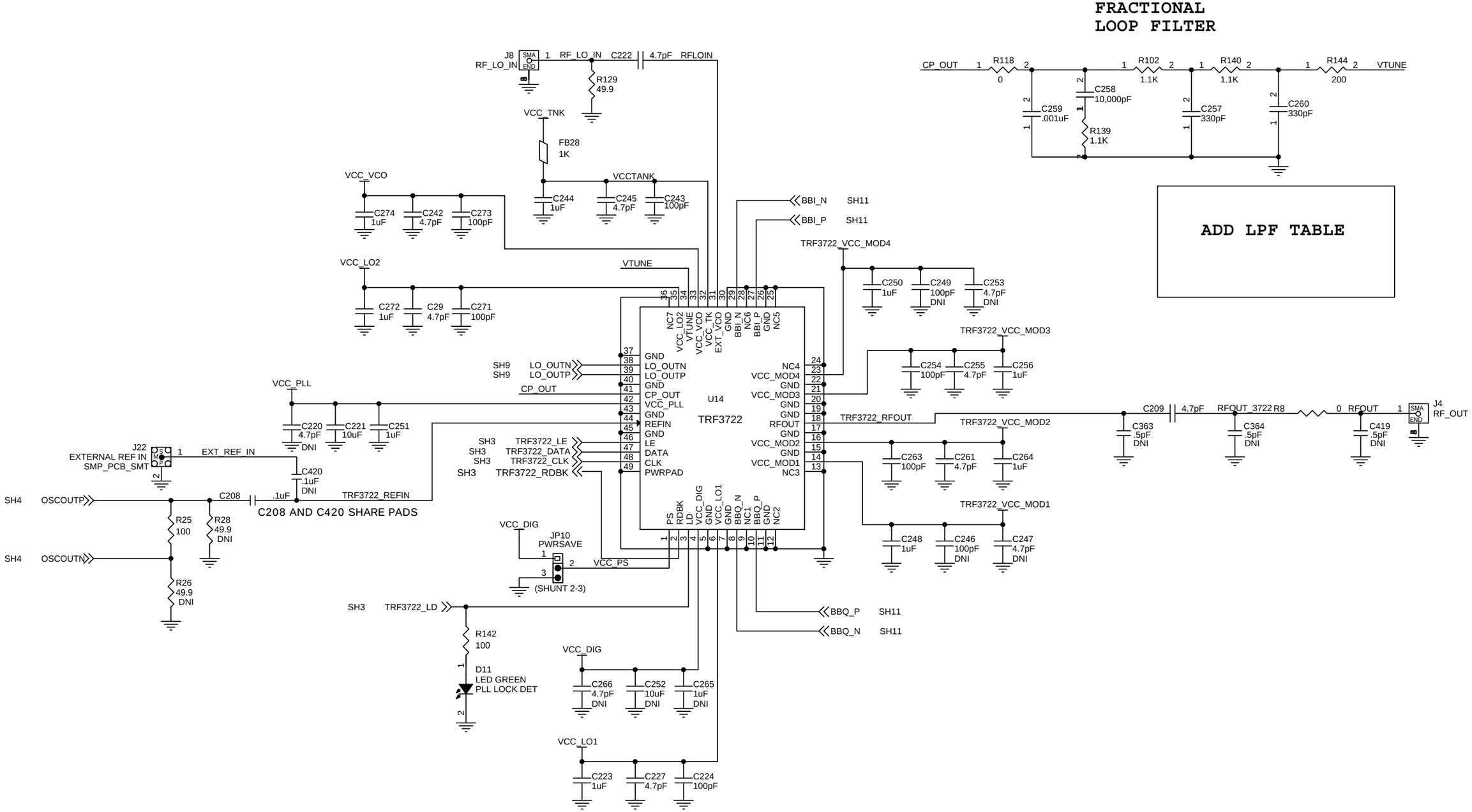

TEXAS INSTRUMENTS

Title	TRF3722 MODULATOR
Size	B
Document Number	TSW38J84 EVM
Rev	B
Date:	Wednesday, August 27, 2015
Sheet	10 of 14

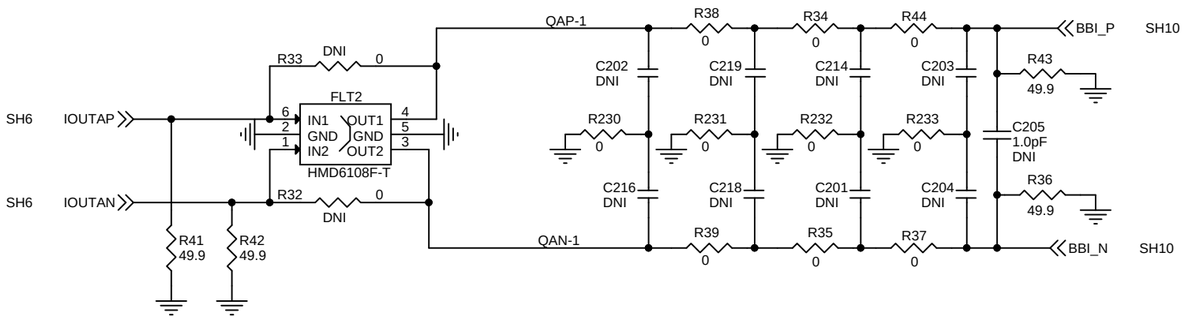

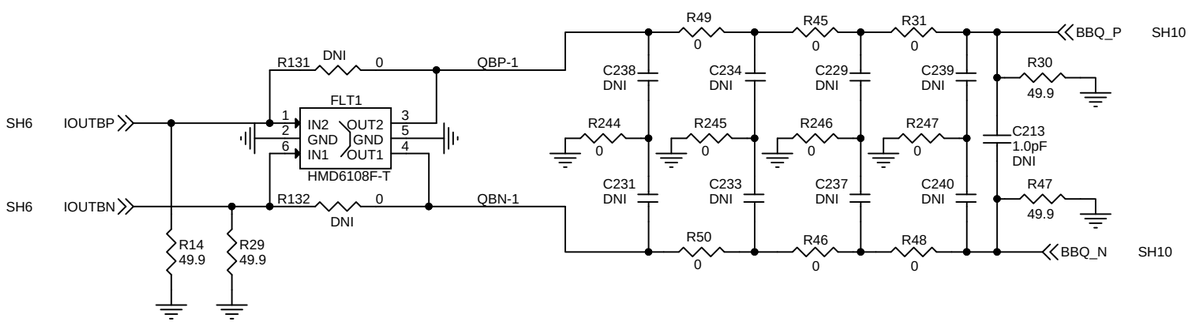

NOTE 1:
Place as close to the modulator as possible

TEXAS INSTRUMENTS

Title	TRF3722 MODULATOR I/F
Size B	Document Number TSW38J84 EVM
Rev B	
Date: Friday, August 29, 2014	Sheet 11 of 14

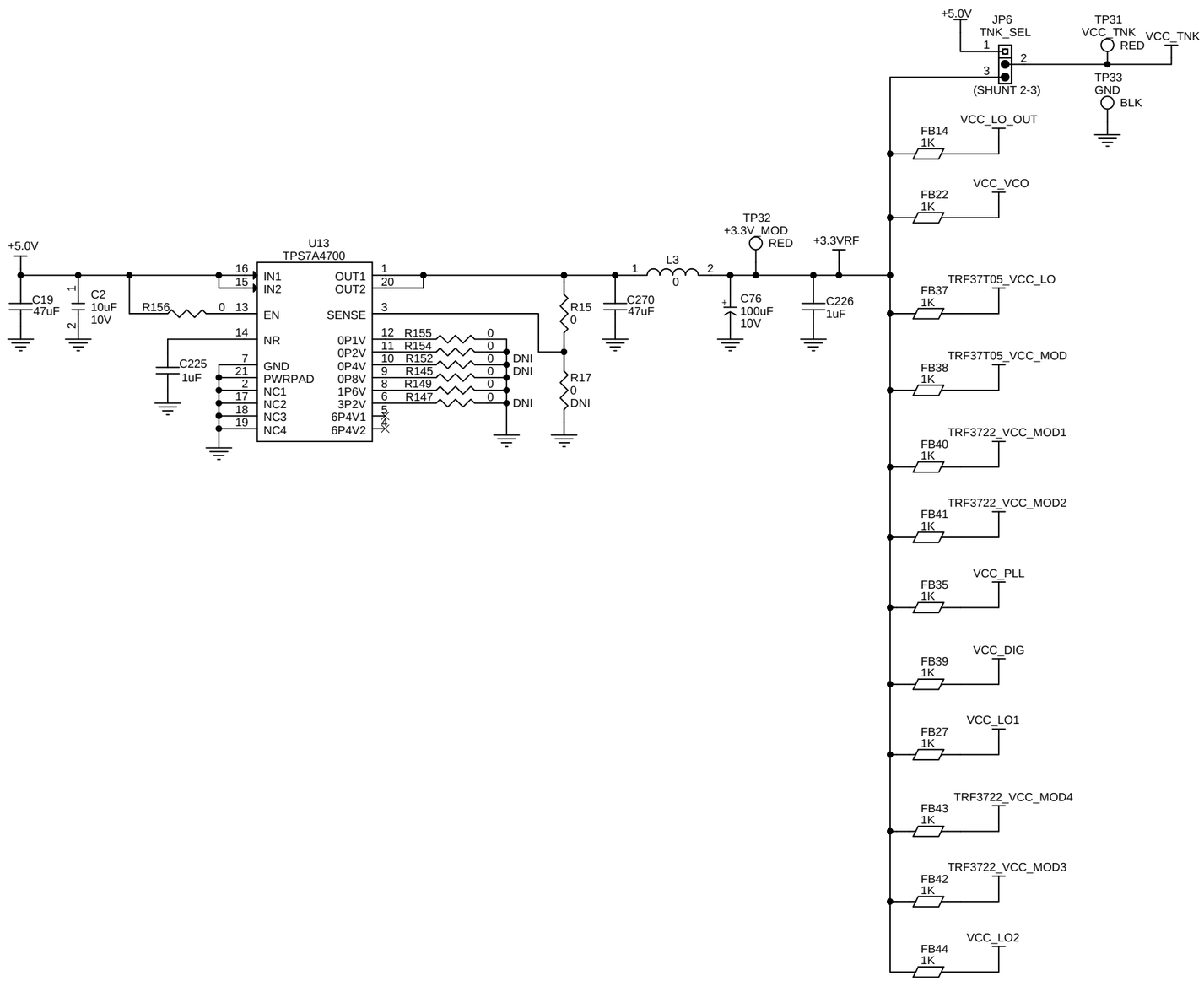

TEXAS INSTRUMENTS

Title	MODULATOR PWR	
Size B	Document Number TSW38J84 EVM	Rev B
Date: Wednesday, August 27, 2015	Sheet 12 of 14	

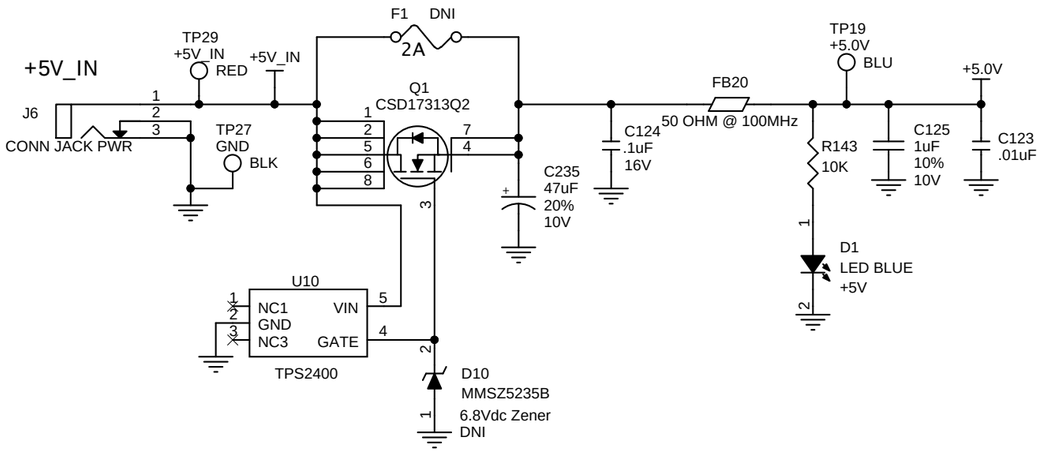

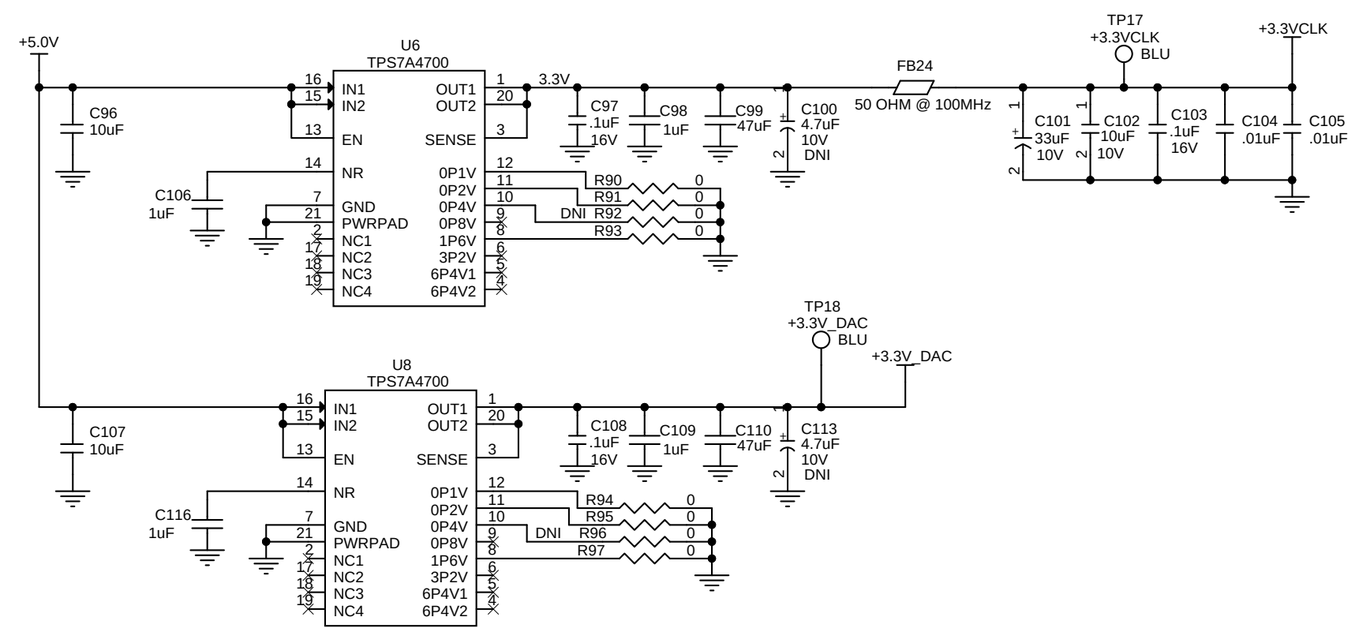

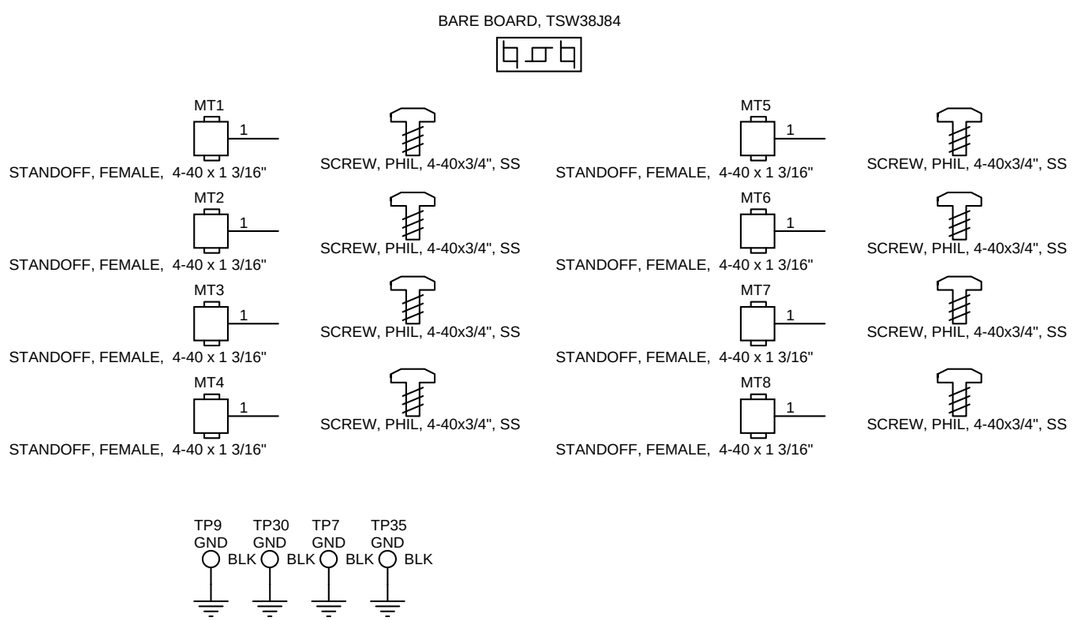

TEXAS INSTRUMENTS
12500 TI Boulevard, Dallas, Texas 75243

Title: MAIN POWER		
Size: B	Document Number: TSW38J84 EVM	Rev: B
Date: Thursday, April 03, 2014	Sheet 13 of 14	

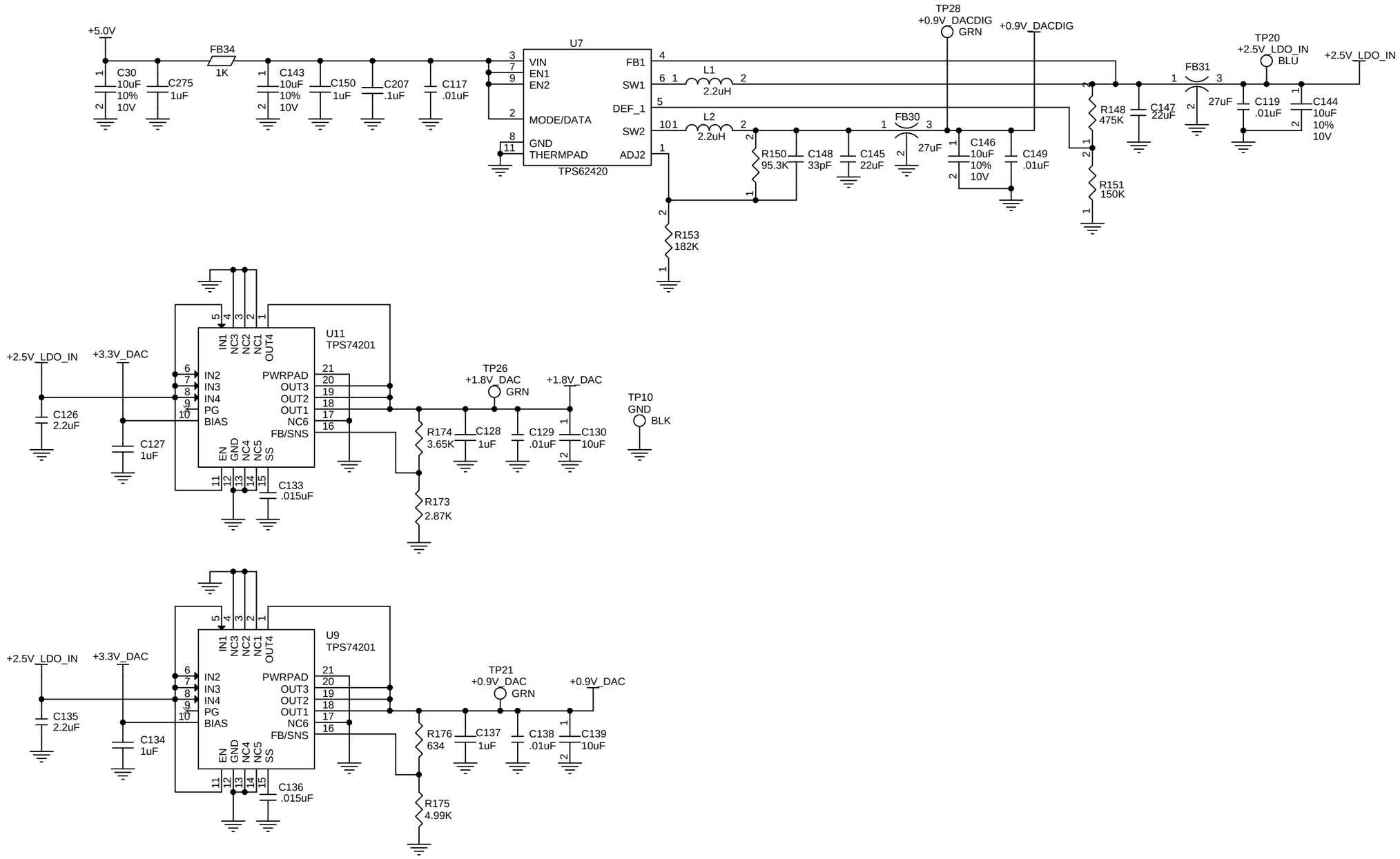

LEADER TECH RF SHIELD P/N SL-11412
QTY - 2 PER BOARD

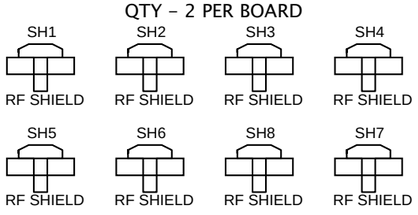

TEXAS INSTRUMENTS
12500 TI Boulevard, Dallas, Texas 75243

Title: POWER		
Size: B	Document Number: TSW38J84 EVM	Rev: B
Date: Thursday, April 03, 2014	Sheet 14 of 14	