# LM5119Q Wide Input Range Dual Synchronous Buck Controller

## 1 Features

- Qualified for Automotive Applications
- AEC-Q100 Qualified With the Following Results:
  - Device Temperature Grade 1: –40°C to 125°C Ambient Operating Temperature Range
  - Device HBM ESD Classification Level 1C
  - Device CDM ESD Classification Level C4A
- Emulated Peak Current Mode Control
- Wide Operating Range (5.5 V to 65 V)
- Easily Configurable for Dual Outputs or Interleaved Single Output
- Robust 3.3-A Peak Gate Drive
- Switching Frequency Programmable to 750 kHz
- Optional Diode Emulation Mode
- Programmable Output from 0.8 V
- Precision 1.5% Voltage Reference
- Programmable Current Limit
- Hiccup Mode Overload Protection
- Programmable Soft-Start
- Programmable Line Undervoltage Lockout
- Automatic Switch-Over to External Bias Supply
- Channel2 Enable Logic Input
- Thermal Shutdown
- Leadless 32-Pin WQFN Package

## 2 Applications

- Automotive Infotainment
- Automotive USB Accessory Adapters

## 3 Description

The LM5119Q device is a dual synchronous buck controller intended for step-down regulator applications from a high voltage or widely varying input supply. The control method is based upon current mode control using an emulated current ramp. Current mode control provides inherent line feedforward, cycle-by-cycle current limiting and ease-of-loop compensation. The use of an emulated control ramp reduces noise sensitivity of the pulse-width modulation circuit, allowing reliable control of very small duty cycles necessary in high input voltage applications. The switching frequency is programmable from 50 kHz to 750 kHz. The LM5119Q device drives external high-side and low-side NMOS power switches with adaptive dead-time control. A user-selectable diode emulation mode enables discontinuous mode operation for improved efficiency at light load conditions. A high voltage bias regulator with automatic switch-over to external bias further improves efficiency. Additional features include thermal shutdown, frequency synchronization, cycle-by-cycle and hiccup mode current limit and adjustable line undervoltage lockout. The device is available in a power enhanced leadless 32-pin WQFN package featuring an exposed die attach pad to aid thermal dissipation.

**Device Information(1)**

| PART NUMBER | PACKAGE | BODY SIZE (NOM) |
|---|---|---|
| LM5119Q | WQFN (32) | 5.00 mm × 5.00 mm |

(1) For all available packages, see the orderable addendum at the end of the data sheet.

**Simplified Application Circuit**

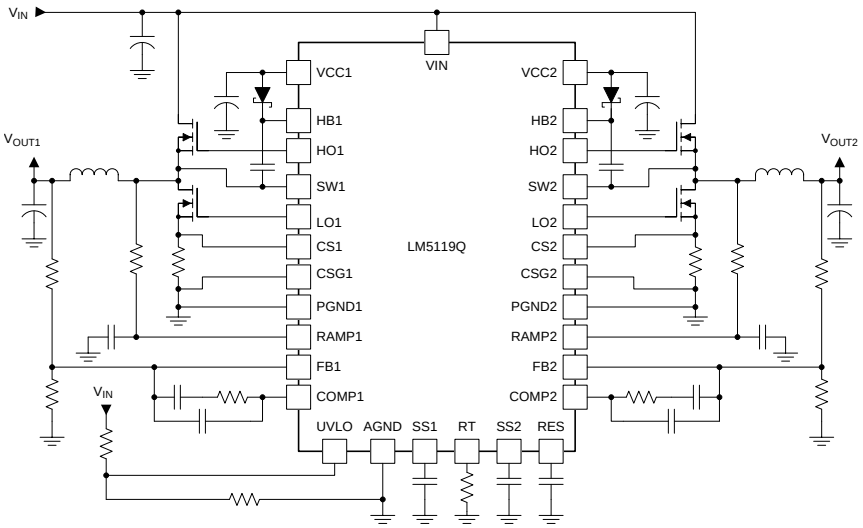


An IMPORTANT NOTICE at the end of this data sheet addresses availability, warranty, changes, use in safety-critical applications, intellectual property matters and other important disclaimers. PRODUCTION DATA.

## Table of Contents

**1 Features** ... 1
**2 Applications** ... 1
**3 Description** ... 1
**4 Revision History** ... 2
**5 Pin Configuration and Functions** ... 3
**6 Specifications** ... 5
6.1 Absolute Maximum Ratings ... 5
6.2 ESD Ratings ... 5
6.3 Recommended Operating Conditions ... 5
6.4 Thermal Information ... 6
6.5 Electrical Characteristics ... 6
6.6 Switching Characteristics ... 8
6.7 Typical Characteristics ... 9
**7 Detailed Description** ... 11
7.1 Overview ... 11
7.2 Functional Block Diagram ... 12
7.3 Feature Description ... 13
7.4 Device Functional Modes ... 18
**8 Application and Implementation** ... 19
8.1 Application Information ... 19
8.2 Typical Applications ... 21
**9 Power Supply Recommendations** ... 34
**10 Layout** ... 34
10.1 Layout Guidelines ... 34
10.2 Layout Example ... 35
**11 Device and Documentation Support** ... 36
11.1 Receiving Notification of Documentation Updates 36
11.2 Community Resources ... 36
11.3 Trademarks ... 36
11.4 Electrostatic Discharge Caution ... 36
11.5 Glossary ... 36
**12 Mechanical, Packaging, and Orderable Information** ... 36

## 4 Revision History

NOTE: Page numbers for previous revisions may differ from page numbers in the current version.

| DATE | REVISION | NOTES |
|---|---|---|
| April 2018 | * | Initial release. Previously included with the LM5119 data sheet. To view previous revision history, see SNVS680. |


Copyright © 2018, Texas Instruments Incorporated

# 5 Pin Configuration and Functions

**RTV Package**
**32-Pin WQFN**
**Top View**

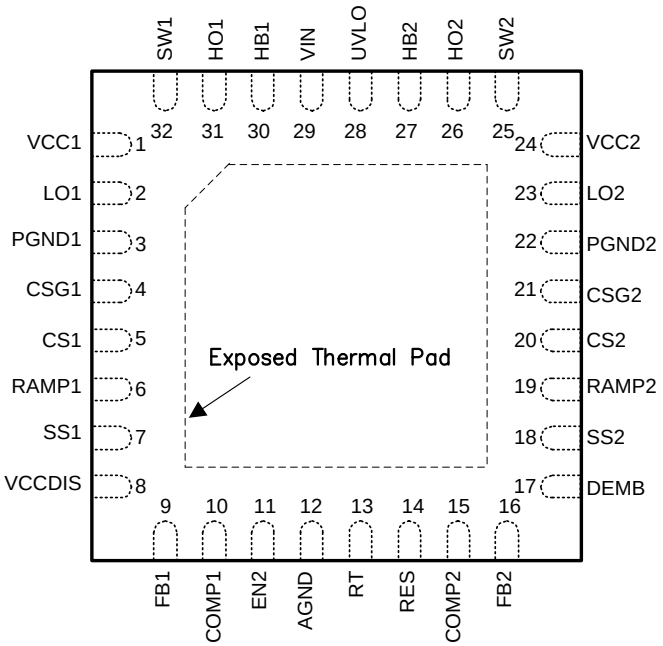


## Pin Functions

| PIN | | TYPE (1) | DESCRIPTION |
|---|---|---|---|
| NAME | NO. | | |
| AGND | 12 | G | Analog ground. Return for the internal 0.8-V voltage reference and analog circuits. |
| COMP1 | 10 | O | Output of the channel1 internal error amplifier. The loop compensation network must be connected between this pin and the FB1 pin. |
| COMP2 | 15 | O | Output of the channel2 internal error amplifier. The loop compensation network must be connected between this pin and the FB2 pin. |
| CS1 | 5 | I | Current sense amplifier input. Connect to the high side of the channel1 current sense resistor. |
| CS2 | 20 | I | Current sense amplifier input. Connect to the high side of the channel2 current sense resistor. |
| CSG1 | 4 | I | Kelvin ground connection to the external current sense resistor. Connect directly to the low side of the channel1 current sense resistor. |
| CSG2 | 21 | I | Kelvin ground connection to the external current sense resistor. Connect directly to the low side of the channel2 current sense resistor. |
| DEMB | 17 | I | Logic input that enables diode emulation when in the low state. In diode emulation mode, the low-side MOSFET is latched off for the remainder of the PWM cycle when the buck inductor current reverses direction (current flow from output to ground). When DEMB is high, diode emulation is disabled allowing current to flow in either direction through the low-side MOSFET. A 50-kΩ pulldown resistor internal to the LM5119Q holds DEMB pin low and enables diode emulation if the pin is left floating. |
| EN2 | 11 | I | If the EN2 pin is low, channel2 is disabled. Channel1 and all other functions remain active. The EN2 has a 50-kΩ pullup resistor to enable channel2 when the pin is left floating. |
| FB1 | 9 | I | Feedback input and inverting input of the channel1 internal error amplifier. A resistor divider from the channel1 output to this pin sets the output voltage level. The regulation threshold at the FB1 pin is 0.8 V. |
| FB2 | 16 | I | Feedback input and inverting input of the channel2 internal error amplifier. A resistor divider from the channel2 output to this pin sets the output voltage level. The regulation threshold at the FB2 pin is 0.8 V. |
| HB1 | 30 | P | High-side driver supply for bootstrap gate drive. Connect to the cathode of the channel1 external bootstrap diode and to the bootstrap capacitor. The bootstrap capacitor supplies current to charge the high-side MOSFET gate and must be placed as close to controller as possible. |

(1) G = Ground, I = Input, O = Output, P = Power

Copyright © 2018, Texas Instruments Incorporated

## Pin Functions (continued)

| PIN | | TYPE (1) | DESCRIPTION |
|---|---|---|---|
| NAME | NO. | | |
| HB2 | 27 | P | High-side driver supply for bootstrap gate drive. Connect to the cathode of the channel2 external bootstrap diode and to the bootstrap capacitor. The bootstrap capacitor supplies current to charge the high-side MOSFET gate and must be placed as close to the controller as possible. |
| HO1 | 31 | O | High-side MOSFET gate drive output. Connect to the gate of the channel1 high-side MOSFET through a short, low inductance path. |
| HO2 | 26 | O | High-side MOSFET gate drive output. Connect to the gate of the channel2 high-side MOSFET through a short, low inductance path. |
| LO1 | 2 | O | Low-side MOSFET gate drive output. Connect to the gate of the channel1 low-side synchronous MOSFET through a short, low inductance path. |
| LO2 | 23 | O | Low-side MOSFET gate drive output. Connect to the gate of the channel2 low-side synchronous MOSFET through a short, low inductance path. |
| PGND1 | 3 | G | Power ground return pin for low-side MOSFET gate driver. Connect directly to the low side of the channel1 current sense resistor. |
| PGND2 | 22 | G | Power ground return pin for low-side MOSFET gate driver. Connect directly to the low side of the channel2 current sense resistor. |
| RAMP1 | 6 | I | PWM ramp signal. An external resistor and capacitor connected between the SW1 pin, the RAMP1 pin and the AGND pin sets the channel1 PWM ramp slope. Proper selection of component values produces a RAMP1 signal that emulates the current in the buck inductor. |
| RAMP2 | 19 | I | PWM ramp signal. An external resistor and capacitor connected between the SW2 pin, the RAMP2 pin and the AGND pin sets the channel2 PWM ramp slope. Proper selection of component values produces a RAMP2 signal that emulates the current in the buck inductor. |
| RES | 14 | O | The restart timer pin for an external capacitor that configures the hiccup mode current limiting. A capacitor on the RES pin determines the time the controller remains off before automatically restarting in hiccup mode. The two regulator channels operate independently. One channel may operate in normal mode while the other is in hiccup mode overload protection. The hiccup mode commences when either channel experiences 256 consecutive PWM cycles with cycle-by-cycle current limiting. After this occurs, a 10-µA current source charges the RES pin capacitor to the 1.25-V threshold which restarts the overloaded channel. |
| RT | 13 | I | The internal oscillator is set with a single resistor between RT and AGND. The recommended maximum oscillator frequency is 1.5 MHz which corresponds to a maximum switching frequency of 750 kHz for either channel. The internal oscillator can be synchronized to an external clock by coupling a positive pulse into RT through a small coupling capacitor. |
| SS1 | 7 | I | An external capacitor and an internal 10-µA current source set the ramp rate of the channel1 error amp reference. The SS1 pin is held low when VCC1 or VCC2 < 4.9 V, UVLO < 1.25 V or during thermal shutdown. |
| SS2 | 18 | I | An external capacitor and an internal 10-µA current source set the ramp rate of the channel2 error amp reference. The SS2 pin is held low when VCC1 or VCC2 < 4.9 V, UVLO < 1.25 V or during thermal shutdown. |
| SW1 | 32 | I/O | Switching node of the buck regulator. Connect to channel1 bootstrap capacitor, the source terminal of the high-side MOSFET and the drain terminal of the low-side MOSFET. |
| SW2 | 25 | I/O | Switching node of the buck regulator. Connect to channel2 bootstrap capacitor, the source terminal of the high-side MOSFET and the drain terminal of the low-side MOSFET. |
| UVLO | 28 | I | Undervoltage lockout programming pin. If the UVLO pin is below 0.4 V, the regulator is in the shutdown mode with all function disabled. If the UVLO pin is greater than 0.4 V and below 1.25 V, the regulator is in standby mode with the VCC regulators operational, the SS pins grounded and no switching at the HO and LO outputs. If the UVLO pin voltage is above 1.25 V, the SS pins are allowed to ramp and pulse width modulated gate drive signals are delivered at the LO and HO pins. A 20-µA current source is enabled when UVLO exceeds 1.25 V and flows through the external UVLO resistors to provide hysteresis. |
| VCCDIS | 8 | I | Optional input that disables the internal VCC regulators when external biasing is supplied. If VCCDIS > 1.25 V, the internal VCC regulators are disabled. The externally supplied bias must be coupled to the VCC pins through a diode. VCCDIS has a 500-kΩ pulldown resistor to ground to enable the VCC regulators when the pin is left floating. The pulldown resistor can be overridden by pulling VCCDIS above 1.25 V with a resistor divider connected to the external bias supply. |
| VIN | 29 | P | Supply voltage input source for the VCC regulators. |
| Thermal Pad | | — | Thermal pad of WQFN package. No internal electrical connections. Solder to the ground plane to reduce thermal resistance. |


Copyright © 2018, Texas Instruments Incorporated

# 6 Specifications

## 6.1 Absolute Maximum Ratings

over operating free-air temperature range (unless otherwise noted)[1]

| | MIN | MAX | UNIT |
|---|---|---|---|
| VIN to AGND | –0.3 | 75 | V |
| SW1, SW2 to AGND | –3 | 75 | V |
| HB1 to SW1, HB2 to SW2 | –0.3 | 15 | V |
| VCC1, VCC2 to AGND [2] | –0.3 | 15 | V |
| FB1, FB2, DEMB, RES, VCCDIS, UVLO to AGND | –0.3 | 15 | V |
| HO1 to SW1, HO2 to SW2 | –0.3 | HB + 0.3 | V |
| LO1, LO2 to AGND | –0.3 | VCC + 0.3 | V |
| SS1, SS2 to AGND | –0.3 | 7 | V |
| EN2, RT to AGND | –0.3 | 7 | V |
| CS1, CS2, CSG1, CSG2 to AGND | –0.3 | 0.3 | V |
| PGND to AGND | –0.3 | 0.3 | V |
| Junction temperature, $T_J$ | | 150 | °C |
| Storage temperature, $T_{stg}$ | –55 | 150 | °C |

(1) Stresses beyond those listed under *Absolute Maximum Ratings* may cause permanent damage to the device. These are stress ratings only, which do not imply functional operation of the device at these or any other conditions beyond those indicated under *Recommended Operating Conditions*. Exposure to absolute-maximum-rated conditions for extended periods may affect device reliability.
(2) These pins must not exceed VIN.

## 6.2 ESD Ratings

| | | | VALUE | UNIT |
|---|---|---|---|---|
| $V_{(ESD)}$ | Electrostatic discharge | Human-body model (HBM), per AEC Q100-002[1] | ±2000 | V |
| | | Charged-device model (CDM), per AEC Q100-011 | ±750 | |

(1) AEC Q100-002 indicates that HBM stressing shall be in accordance with the ANSI/ESDA/JEDEC JS-001 specification.

## 6.3 Recommended Operating Conditions

over operating free-air temperature range (unless otherwise noted)

| | | MIN | MAX | UNIT |
|---|---|---|---|---|
| | VIN | 5.5 | 65 | V |
| | VCC | 5.5 | 14 | V |
| | HB to SW | 5.5 | 14 | V |
| $T_J$ | Junction temperature | –40 | 125 | °C |

## 6.4 Thermal Information

| THERMAL METRIC[1] | | LM5119Q RTV (WQFN) 32 PINS | UNIT |
|---|---|---|---|
| $R_{\theta JA}$ | Junction-to-ambient thermal resistance | 36.7 | °C/W |
| $R_{\theta JC(top)}$ | Junction-to-case (top) thermal resistance | 20.9 | °C/W |
| $R_{\theta JB}$ | Junction-to-board thermal resistance | 9 | °C/W |
| $\psi_{JT}$ | Junction-to-top characterization parameter | 0.2 | °C/W |
| $\psi_{JB}$ | Junction-to-board characterization parameter | 8.9 | °C/W |
| $R_{\theta JC(bot)}$ | Junction-to-case (bottom) thermal resistance | 2.2 | °C/W |

(1) For more information regarding traditional and new thermal metrics, see the *Semiconductor and IC Package Thermal Metrics* application report, SPRA953.

## 6.5 Electrical Characteristics

Typical values correspond to $T_J$ = 25°C. Minimum and maximum limits apply over –40°C to 125°C junction temperature range. $V_{IN}$ = 36 V, $V_{CC}$ = 8 V, $V_{VCCDI}$S = 0 V, $V_{EN2}$ = 5 V, $R_T$ = 25 kΩ, and no load on LO or HO (unless otherwise noted).

| PARAMETER | | TEST CONDITIONS | MIN[1] | TYP[2] | MAX[1] | UNIT |
|---|---|---|---|---|---|---|
| **VIN SUPPLY** | | | | | | |
| $I_{BIAS}$ | VIN operating current | SS1 = SS2 = 0 V | | 6 | 7.3 | mA |
| | | VCCDIS = 2V, SS1 = SS2 = 0 V | | 400 | 550 | µA |
| $I_{VCC}$ | VCC1 operating current | VCCDIS = 2 V, SS1 = SS2 = 0 V | | 3.9 | 4.5 | mA |
| | VCC2 operating current | VCCDIS = 2 V, SS1 = SS2 = 0 V | | 1.4 | 2 | mA |
| $I_{SHUTDOWN}$ | VIN shutdown current | UVLO = 0 V, SS1 = SS2 = 0 V | | 18 | 50 | µA |
| **VCC REGULATOR**[3] | | | | | | |
| $V_{CC(REG)}$ | VCC regulation | | 6.77 | 7.6 | 8.34 | V |
| | | VIN = 6 V, no external load | 5.9 | 5.95 | | |
| | Sourcing current limit | VCC = 0 V | 25 | 40 | | mA |
| | VCCDIS switch threshold | VCCDIS rising | 1.19 | 1.25 | 1.29 | V |
| | VCCDIS switch hysteresis | | | 0.07 | | V |
| | VCCDIS input current | VCCDIS = 0 V | | –20 | | nA |
| | Undervoltage threshold | Positive going VCC | 4.7 | 4.9 | 5.2 | V |
| | Undervoltage hysteresis | | | 0.2 | | V |
| **EN2 INPUT** | | | | | | |
| $V_{IL}$ | EN2 input low threshold | | | 2 | 1.5 | V |
| $V_{IH}$ | EN2 input high threshold | | 2.9 | 2.5 | | V |
| | EN2 input pullup resistor | | | 50 | | kΩ |
| **UVLO** | | | | | | |
| | Threshold | UVLO rising | 1.2 | 1.25 | 1.29 | V |
| | Hysterisis current | UVLO = 1.4 V | 15 | 20 | 25 | µA |
| | Shutdown threshold | | | 0.4 | | V |
| | Shutdown hysteresis voltage | | | 0.1 | | V |
| **SOFT START** | | | | | | |
| | Current source | SS = 0 V | 7 | 10 | 13 | µA |
| | Pulldown $R_{DSON}$ | | | 10 | | Ω |

(1) Min and Max limits are 100% production tested at 25°C. Limits over the operating temperature range are specified through correlation using Statistical Quality Control (SQC) methods. Limits are used to calculate Texas Instrument's Average Outgoing Quality Level (AOQL).
(2) Typical specifications represent the most likely parametric normal at 25°C operation.
(3) Per VCC Regulator.


Copyright © 2018, Texas Instruments Incorporated

## Electrical Characteristics (continued)

Typical values correspond to $T_J$ = 25°C. Minimum and maximum limits apply over –40°C to 125°C junction temperature range. $V_{IN}$ = 36 V, $V_{CC}$ = 8 V, $V_{VCCDI}$S = 0 V, $V_{EN2}$ = 5 V, $R_T$ = 25 kΩ, and no load on LO or HO (unless otherwise noted).

| PARAMETER | | TEST CONDITIONS | MIN(1) | TYP(2) | MAX(1) | UNIT |
|---|---|---|---|---|---|---|
| **ERROR AMPLIFIER** | | | | | | |
| $V_{REF}$ | FB reference voltage | Measured at FB pin, FB = COMP | 0.788 | 0.8 | 0.812 | V |
| | FB input bias current | FB = 0.8 V | | 1 | | nA |
| | FB disable threshold | Interleaved threshold | | 2.5 | | V |
| | COMP VOH | Isource = 3 mA | 2.8 | | | V |
| | COMP VOL | Isink = 3 mA | | | 0.31 | V |
| $A_{OL}$ | DC gain | | | 80 | | dB |
| $f_{BW}$ | Unity gain bandwidth | | | 3 | | MHz |
| **PWM COMPARATORS** | | | | | | |
| $t_{HO(OFF)}$ | Forced HO OFF-time | | 220 | 320 | 430 | ns |
| $t_{ON(min)}$ | Minimum HO ON-time | $C_{RAMP}$ = 50 pF | | 100 | | ns |
| **OSCILLATOR** | | | | | | |
| $f_{SW1}$ | Frequency 1 | $R_T$ = 25 kΩ | 180 | 200 | 220 | kHz |
| $f_{SW2}$ | Frequency 2 | $R_T$ = 10 kΩ | 430 | 480 | 530 | kHz |
| | RT output voltage | | | 1.25 | | V |
| | RT sync positive threshold | | 2.5 | 3.2 | 4 | V |
| | Sync pulse minimum width | | 100 | | | ns |
| **CURRENT LIMIT** | | | | | | |
| $V_{CS(TH)}$ | Cycle-by-cycle sense voltage threshold (CS – CSG) | RAMP = 0 | 106 | 120 | 134 | mV |
| | CS bias current | CS = 0 V | | –70 | –95 | µA |
| | Hiccup mode fault timer | | | 256 | | Cycles |
| **RES** | | | | | | |
| $I_{RES}$ | Current source | | | 9.7 | | µA |
| $V_{RES}$ | Threshold | $C_{RES}$ charging | 1.2 | 1.25 | 1.3 | V |
| **DIODE EMULATION** | | | | | | |
| $V_{IL}$ | DEMB input low threshold | | | 2 | 1.65 | V |
| $V_{IH}$ | DEMB input high threshold | | 2.9 | 2.6 | | V |
| | DEMB input pulldown resistance | | | 50 | | kΩ |
| | SW zero cross threshold | | | –5 | | mV |
| **LO GATE DRIVER** | | | | | | |
| $V_{OLL}$ | LO low-state output voltage | $I_{LO}$ = 100 mA | | 0.1 | 0.18 | V |
| $V_{OHL}$ | LO high-state output voltage | $I_{LO}$ = –100 mA, $V_{OHL}$ = VCC – $V_{LO}$ | | 0.17 | 0.26 | V |
| | LO rise time | C-load = 1000 pF | | 6 | | ns |
| | LO fall time | C-load = 1000 pF | | 5 | | ns |
| $I_{OHL}$ | Peak LO source current | $V_{LO}$ = 0 V | | 2.5 | | A |
| $I_{OLL}$ | Peak LO sink current | $V_{LO}$ = VCC | | 3.3 | | A |
| **HO GATE DRIVER** | | | | | | |
| $V_{OLH}$ | HO low-state output voltage | $I_{HO}$ = 100 mA | | 0.11 | 0.19 | V |
| $V_{OHH}$ | HO high-state output voltage | $I_{HO}$ = –100 mA, $V_{OHH}$ = $V_{HB}$ – $V_{HO}$ | | 0.18 | 0.27 | V |
| | HO rise time | C-load = 1000 pF | | 6 | | ns |
| | HO fall time | C-load = 1000 pF | | 5 | | ns |
| $I_{OHH}$ | Peak HO Source current | $V_{HO}$ = 0 V, SW = 0, HB = 8 V | | 2.2 | | A |
| $I_{OLH}$ | Peak HO sink current | $V_{HO}$ = $V_{HB}$ = 8 V | | 3.3 | | A |
| | HB to SW undervoltage | | | 3 | | V |

Copyright © 2018, Texas Instruments Incorporated

## Electrical Characteristics (continued)

Typical values correspond to $T_J$ = 25°C. Minimum and maximum limits apply over –40°C to 125°C junction temperature range. $V_{IN}$ = 36 V, $V_{CC}$ = 8 V, $V_{VCCDI}$S = 0 V, $V_{EN2}$ = 5 V, $R_T$ = 25 kΩ, and no load on LO or HO (unless otherwise noted).

| PARAMETER | | TEST CONDITIONS | MIN(1) | TYP(2) | MAX(1) | UNIT |
|---|---|---|---|---|---|---|
| | HB DC bias current | HB – SW = 8 V | | 70 | 100 | µA |
| **THERMAL** | | | | | | |
| $T_{SD}$ | Thermal shutdown | Rising | | 165 | | °C |
| | Thermal shutdown hysteresis | | | 25 | | °C |

## 6.6 Switching Characteristics

Typical values correspond to $T_J$ = 25°C. Minimum and maximum limits apply over –40°C to 125°C junction temperature range. VIN = 36 V, VCC = 8 V, VCCDIS = 0 V, EN2 = 5 V, $R_T$ = 25 kΩ, and no load on LO or HO (unless otherwise noted).

| PARAMETER | TEST CONDITIONS | MIN | TYP | MAX | UNIT |
|---|---|---|---|---|---|
| LO fall to HO rise delay | No load | | 70 | | ns |
| HO fall to LO rise delay | No load | | 60 | | ns |


Copyright © 2018, Texas Instruments Incorporated

## 6.7 Typical Characteristics

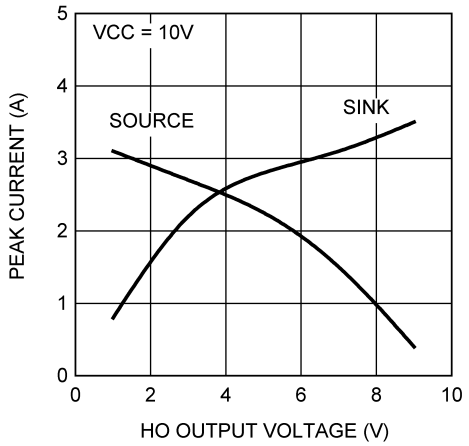


**Figure 1. HO Peak Driver Current vs Output Voltage**

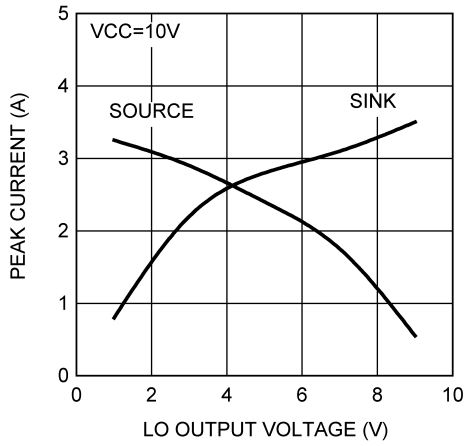


**Figure 2. LO Peak Driver Current vs Output Voltage**

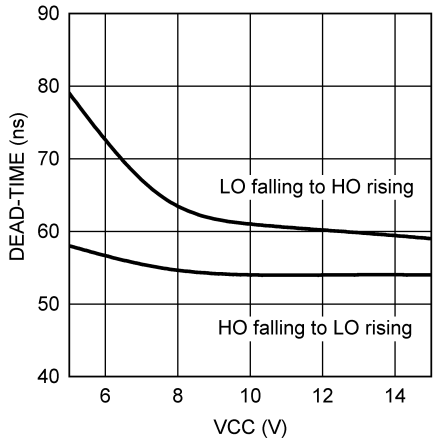


**Figure 3. Driver Dead Time vs VCC**

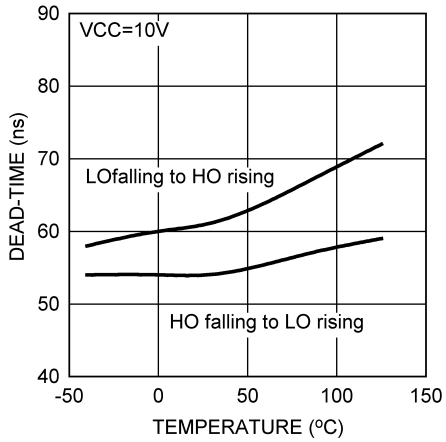


**Figure 4. Driver Dead Time vs Temperature**

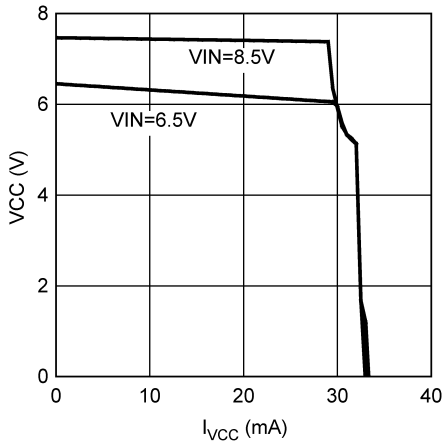


**Figure 5. VCC vs $I_{VCC}$**

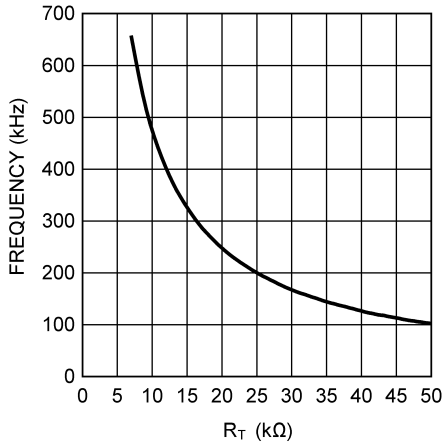


**Figure 6. Switching Frequency vs $R_T$**

## Typical Characteristics (continued)

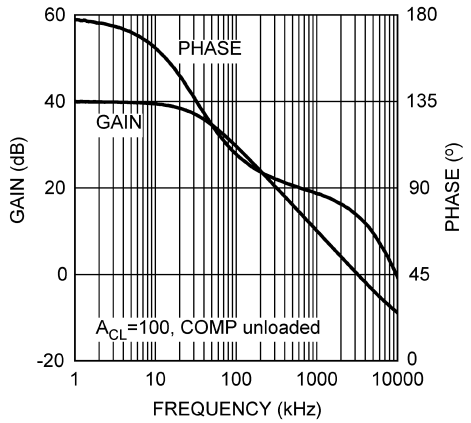


**Figure 7. Error Amp Gain and Phase vs Frequency**


Copyright © 2018, Texas Instruments Incorporated

# 7 Detailed Description

## 7.1 Overview

The LM5119 high voltage switching regulator features all of the functions necessary to implement an efficient dual channel buck regulator that operates over a very wide input voltage range. The LM5119 may be configured as two independent regulators or as a single high current regulator with two interleaved channels. This easy-to-use regulator integrates high-side and low-side MOSFET drivers capable of supplying peak currents of 2.5 A (VCC = 8 V). The regulator control method is based on current mode control using an emulated current ramp. Emulated peak current mode control provides inherent line feedforward, cycle-by-cycle current limiting and ease-of-loop compensation. The use of an emulated control ramp reduces noise sensitivity of the pulse-width modulation circuit, allowing reliable processing of the very small duty cycles necessary in high input voltage applications. The switching frequency is user programmable from 50 kHz to 750 kHz. An oscillator or synchronization pin allows the operating frequency to be set by a single resistor or synchronized to an external clock. An undervoltage lockout and channel2 enable pin allows either both regulators to be disabled or channel2 to be disabled with full operation of channel1. Fault protection features include current limiting, thermal shutdown, and remote shutdown capability. The undervoltage lockout input enables both channels when the input voltage reaches a user selected threshold and provides a very low quiescent shutdown current when pulled low. The 32-pin WQFN package features an exposed pad to aid in thermal dissipation.

## 7.2 Functional Block Diagram

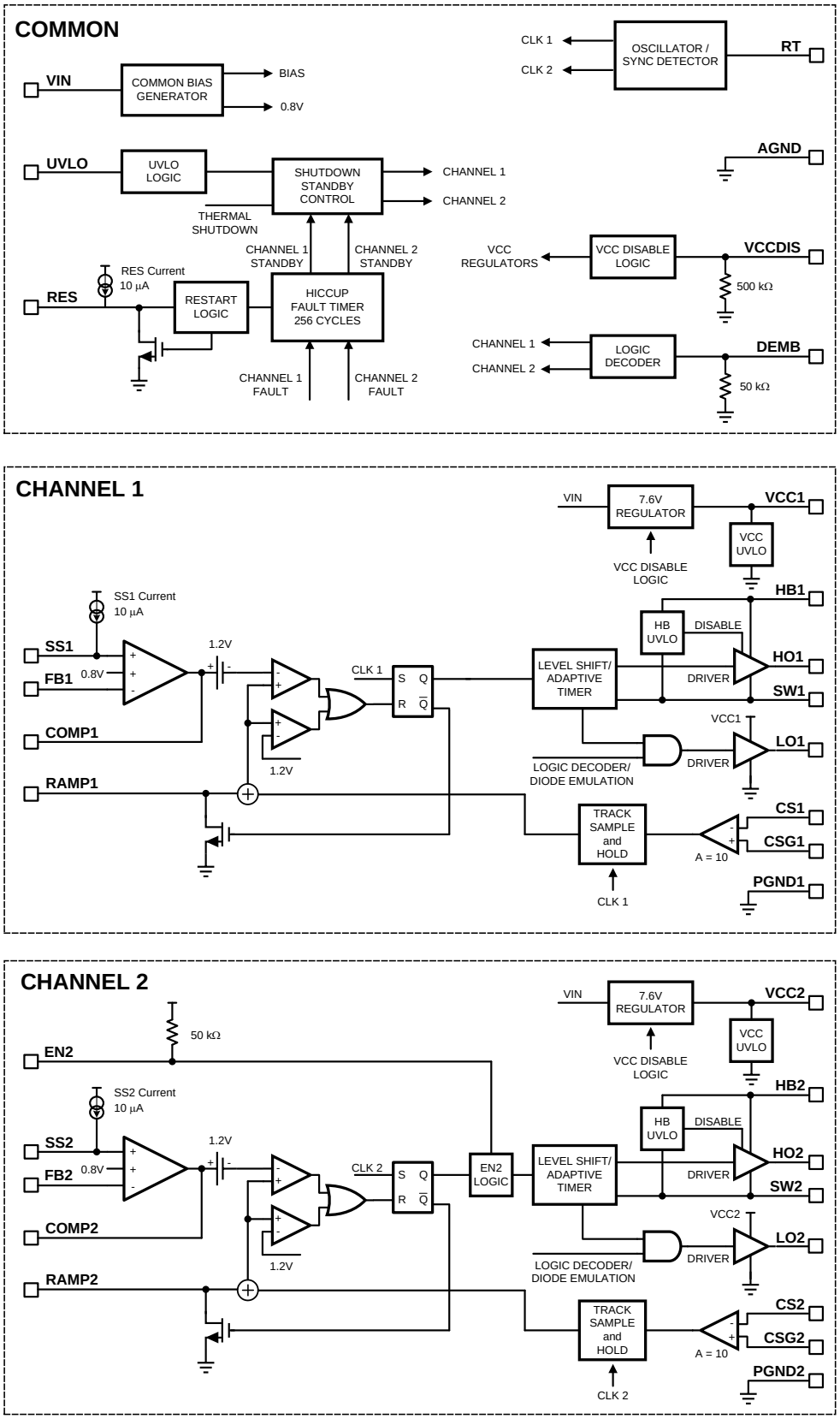


Copyright © 2016, Texas Instruments Incorporated


Copyright © 2018, Texas Instruments Incorporated

## 7.3 Feature Description

### 7.3.1 High Voltage Start-Up Regulator

The LM5119 contains two internal high voltage bias regulators, VCC1 and VCC2, that provide the bias supply for the PWM controllers and gate drive for the MOSFETs of each regulator channel. The input pin (VIN) can be connected directly to an input voltage source as high as 65 V. The outputs of the VCC regulators are set to 7.6 V. When the input voltage is below the VCC set-point level, the VCC output tracks the VIN with a small dropout voltage. If VCC1 is in an undervoltage condition, channel2 is disabled. This interdependence is necessary to prevent channel2 from running open-loop in the single output interleaved mode when the channel2 error amplifier is disabled (if either VCC is in UV, both channels are disabled).

The outputs of the VCC regulators are current limited at 25-mA (minimum) output capability. Upon power up, the regulators source current into the capacitors connected to the VCC pins. When the voltage at the VCC pins exceed 4.9 V and the UVLO pin is greater than 1.25 V, both channels are enabled and a soft-start sequence begins. Both channels remain enabled until either VCC pin falls below 4.7 V, the UVLO pin falls below 1.25 V or the die temperature exceeds the thermal limit threshold.

When operating at higher input voltages the bias power dissipation within the controller can be excessive. An output voltage derived bias supply can be applied to a VCC pins to reduce the IC power dissipation. The VCCDIS input can be used to disable the internal VCC regulators when external biasing is supplied. If VCCDIS >1.25 V, the internal VCC regulators are disabled. The externally supplied bias must be coupled to the VCC pins through a diode, preferably a Schottky (low forward voltage). VCCDIS has a 500-kΩ internal pulldown resistance to ground for normal operation with no external bias. The internal pulldown resistance can be overridden by pulling VCCDIS above 1.25 V through a resistor divider connected to an external bias supply.

The VCC regulator series pass transistor includes a diode between VCC and VIN that must not be forward biased in normal operation.

If the external bias winding can supply VCC greater than VIN, an external blocking diode is required from the input power supply to the VIN pin to prevent the external bias supply from passing current to the input supply through the VCC pins. For VOUT between 6 V and 14.5 V, VOUT can be connected directly to VCC through a diode. For VOUT < 6 V, a bias winding on the output inductor can be added as shown in Figure 8.

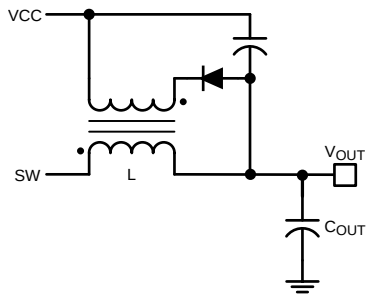


**Figure 8. VCC Bias Supply With Additional Inductor Winding**

In high voltage applications, take extra care to ensure the VIN pin does not exceed the absolute maximum voltage rating of 75 V. During line or load transients, voltage ringing on the VIN line that exceeds the Absolute Maximum Rating can damage the IC. Both careful PCB layout and the use of quality bypass capacitors placed close to the VIN and AGND pins are essential.

### 7.3.2 UVLO

The LM5119 contains a dual-level undervoltage lockout (UVLO) circuit. When the UVLO pin is less than 0.4 V, the LM5119 is in shutdown mode. The shutdown comparator provides 100 mV of hysteresis to avoid chatter during transitions. When the UVLO pin voltage is greater than 0.4 V but less than 1.25 V, the controller is in standby mode. In the standby mode the VCC bias regulators are active but the controller outputs are disabled. This feature allows the UVLO pin to be used as a remote enable or disable function. When the VCC outputs exceed their respective undervoltage thresholds (4.9 V) and the UVLO pin voltage is greater than 1.25 V, the outputs are enabled and normal operation begins.

Copyright © 2018, Texas Instruments Incorporated

## Feature Description (continued)

An external set-point voltage divider from the VIN to GND is used to set the minimum VIN operating voltage of the regulator. The divider must be designed such that the voltage at the UVLO pin is greater than 1.25 V when the input voltage is in the desired operating range. UVLO hysteresis is accomplished with an internal 20-μA current source that is switched on or off into the impedance of the set-point divider. When the UVLO pin voltage exceeds 1.25-V threshold, the current source is activated to quickly raise the voltage at the UVLO pin. When the UVLO pin voltage falls below the 1.25-V threshold, the current source is turned off causing the voltage at the UVLO pin to quickly fall. The UVLO pin must not be left floating.

### 7.3.3 Enable 2

The LM5119 contains an enable function allowing shutdown control of channel2, independent of channel1. If the EN2 pin is pulled below 2 V, channel2 enters shutdown mode. If the EN2 input is greater than 2.5 V, channel2 returns to normal operation. An internal 50-kΩ pullup resistor on the EN2 pin allows this pin to be left floating for normal operation. The EN2 input can be used in conjunction with the UVLO pin to sequence the two regulator channels. If EN2 is held low as the UVLO pin increases to a voltage greater than the 1.25-V UVLO threshold, channel1 begins operation while channel2 remains off. Both channels become operational when the UVLO, EN2, VCC1, and VCC2 pins are above their respective operating thresholds. Either channel of the LM5119 can also be disabled independently by pulling the corresponding SS pin to AGND.

### 7.3.4 Oscillator and Sync Capability

The LM5119 switching frequency is set by a single external resistor connected between the RT pin and the AGND pin ($R_T$). The resistor must be located very close to the device and connected directly to the pins of the IC (RT and AGND). To set a desired switching frequency ($f_{SW}$) of each channel, the resistor can be calculated with Equation 1.

$$R_T = \frac{5.2 \times 10^9}{f_{SW}} - 948$$

where

- RT is in ohms
- $f_{SW}$ is in hertz (1)

The frequency $f_{SW}$ is the output switching frequency of each channel. The internal oscillator runs at twice the switching frequency and an internal frequency divider interleaves the two channels with 180° phase shift between PWM pulses at the HO pins.

The RT pin can be used to synchronize the internal oscillator to an external clock. The internal oscillator can be synchronized by AC coupling a positive edge into the RT pin. The voltage at the RT pin is nominally 1.25 V and the voltage at the RT pin must exceed 4 V to trip the internal synchronization pulse detector. A 5-V amplitude signal and 100-pF coupling capacitor are recommended. Synchronizing at greater than twice the free-running frequency may result in abnormal behavior of the pulse width modulator. Also, note that the output switching frequency of each channel is one-half the applied synchronization frequency.

### 7.3.5 Error Amplifiers and PWM Comparators

Each of the two internal high-gain error amplifiers generates an error signal proportional to the difference between the regulated output voltage and an internal precision reference (0.8 V). The output of each error amplifier is connected to the COMP pin allowing the user to provide loop compensation components. Generally a Type II network is recommended. This network creates a pole at 0 Hz, a mid-band zero, and a noise-reducing, high-frequency pole. The PWM comparator compares the emulated current sense signal from the RAMP generator to the error amplifier output voltage at the COMP pin. Only one error amplifier is required when configuring the controller as a two-channel, single-output interleaved regulator. For these applications, the channel1 error amplifier (FB1, COMP1) is configured as the master error amplifier. The channel2 error amplifier must be disabled by connecting the FB2 pin to the VCC2 pin. When configured in this manner the output of the channel2 error amplifier (COMP2) is disabled and have a high output impedance. To complete the interleaved configuration the COMP1 and the COMP2 pins must be connected together to facilitate PWM control of channel2 and current sharing between channels.


Copyright © 2018, Texas Instruments Incorporated

## Feature Description (continued)

### 7.3.6 Ramp Generator

The ramp signal used in the pulse width modulator for current mode control is typically derived directly from the buck switch current. This switch current corresponds to the positive slope portion of the inductor current. Using this signal for the PWM ramp simplifies the control loop transfer function to a single pole response and provides inherent input voltage feedforward compensation. The disadvantage of using the buck switch current signal for PWM control is the large leading edge spike due to circuit parasitics that must be filtered or blanked. Also, the current measurement may introduce significant propagation delays. The filtering, blanking time and propagation delay limit the minimum achievable pulse width. In applications where the input voltage may be relatively large in comparison to the output voltage, controlling small pulse widths and duty cycles are necessary for regulation. The LM5119 using a unique ramp generator which does not actually measure the buck switch current but rather reconstructs the signal. Representing or emulating the inductor current provides a ramp signal to the PWM comparator that is free of leading edge spikes and measurement or filtering delays. The current reconstruction is comprised of two elements; a sample-and-hold DC level and the emulated inductor current ramp as shown in Figure 9.

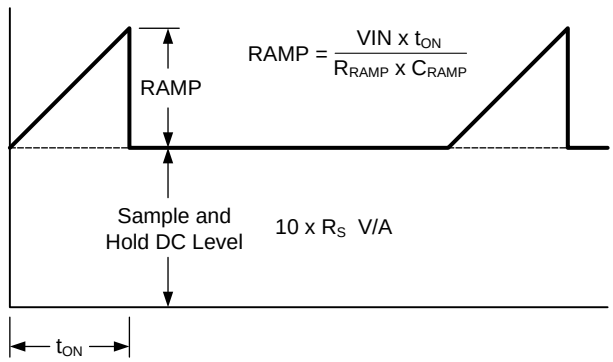


**Figure 9. Composition of Current Sense Signal**

The sample-and-hold DC level is derived from a measurement of the recirculating current flowing through the current sense resistor. The voltage across the sense resistor is sampled and held just prior to the onset of the next conduction interval of the buck switch. The current sensing and sample-and-hold provide the DC level of the reconstructed current signal. The positive slope inductor current ramp is emulated by an external capacitor connected from RAMP pin to AGND and a series resistor connected between SW and RAMP. The ramp resistor must not be connected to VIN directly because the RAMP pin voltage rating could be exceeded under high VIN conditions. The ramp created by the external resistor and capacitor has a slope proportional to the rising inductor current plus some additional slope required for slope compensation. Connecting the RAMP pin resistor to SW provides optimum slope compensation with a RAMP capacitor slope that is proportional to VIN. This *adaptive slope compensation* eliminates the requirement for additional slope compensation circuitry with high output voltage set points and frees the user from additional concerns in this area. The emulated ramp signal is approximately linear and the ramp slope is given in Equation 2.

$$\frac{dV_{RAMP}}{dt} = \frac{10 \times K \times V_{IN} \times R_S}{L} \tag{2}$$

The factor of 10 in Equation 2 corresponds to the internal current sense amplifier gain of the LM5119. The K factor is a constant which adds additional slope for robust pulse-width modulation control at lower input voltages. In practice this constant can be varied from 1 to 3. $R_S$ is the external sense resistor value.

The voltage on the ramp capacitor is given with Equation 3 and Equation 4.

$$V_{RAMP} = V_{IN} \times \left(1 - e^{\frac{t_{PERIOD}}{R_{RAMP} \times C_{RAMP}}}\right) \tag{3}$$

$$V_{RAMP} \approx \frac{V_{IN} \times t_{PERIOD}}{R_{RAMP} \times C_{RAMP}} \tag{4}$$

## Feature Description (continued)

The approximation is the first order term in a Taylor Series expansion of the exponential and is valid because $t_{PERIOD}$ is small relative to the RAMP pin R-C time constant.

Multiplying Equation 2 by $t_{PERIOD}$ to convert the slope to a peak voltage, and then equating Equation 2 with Equation 4 allows us to solve for $C_{RAMP}$ using Equation 5.

$$C_{RAMP} = \frac{L}{10 \times R_S \times K \times R_{RAMP}} \tag{5}$$

Choose either $C_{RAMP}$ or $R_{RAMP}$ and use Equation 5 to calculate the other component.

The difference between the average inductor current and the DC value of the sampled inductor current can cause instability for certain operating conditions. This instability is known as sub-harmonic oscillation, which occurs when the inductor ripple current does not return to its initial value by the start of next switching cycle. Sub-harmonic oscillation is normally characterized by alternating wide and narrow pulses at the switch node. The ramp equation above contains the optimum amount of slope compensation, however extra slope compensation is easily added by selecting a lower value for $R_{RAMP}$ or $C_{RAMP}$.

### 7.3.7 Current Limit

The LM5119 contains a current limit monitoring scheme to protect the regulator from possible overcurrent conditions. When set correctly, the emulated current signal is proportional to the buck switch current with a scale factor determined by the current limit sense resistor, $R_S$, and current sense amplifier gain. The emulated signal is applied to the current limit comparator. If the emulated ramp signal exceeds 1.2 V, the present cycle is terminated (cycle-by-cycle current limiting). The current limit comparator and a simplified current measurement schematic is shown in Figure 10. In applications with small output inductance and high input voltage, the switch current may overshoot due to the propagation delay of the current limit comparator. If an overshoot must occur, the sample-and-hold circuit detects the excess recirculating current before the buck switch is turned on again. If the sample-and-hold DC level exceeds the internal current limit threshold, the buck switch is disabled and skip pulses until the current has decayed below the current limit threshold. This approach prevents current runaway conditions due to propagation delays or inductor saturation because the inductor current is forced to decay to a controlled level following any current overshoot.

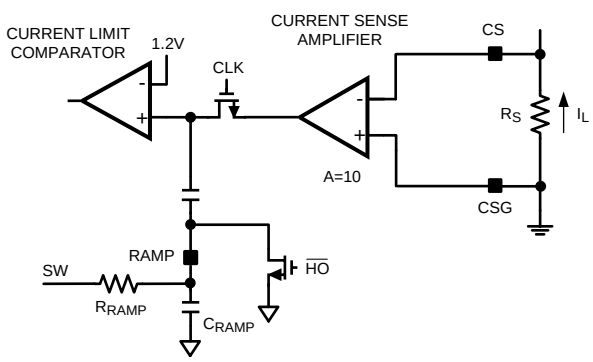


**Figure 10. Current Limit and Ramp Circuit**

### 7.3.8 Hiccup Mode Current Limiting

To further protect the regulator during prolonged current limit conditions, an internal counter counts the PWM clock cycles during which cycle-by-cycle current limiting occurs. When the counter detects 256 consecutive cycles of current limiting, the regulator enters a low power dissipation hiccup mode with the HO and LO outputs disabled. The restart timer pin, RES, and an external capacitor configure the hiccup mode current limiting. A capacitor on the RES pin ($C_{RES}$) determines the time the controller remains in low power standby mode before automatically restarting. A 10-µA current source charges the RES pin capacitor to the 1.25-V threshold which restarts the overloaded channel. The two regulator channels operate independently. One channel may operate normally while the other is in the hiccup mode overload protection. The hiccup mode commences when either channel experiences 256 consecutive PWM cycles with cycle-by-cycle current limiting. If that occurs, the overloaded channel turns off and remains off for the duration of the RES pin timer.


Copyright © 2018, Texas Instruments Incorporated

## Feature Description (continued)

The hiccup mode current limiting function can be disabled. The RES configuration is latched during initial power up when UVLO is above 1.25 V and VCC1 and VCC2 are above their UV thresholds, determining hiccup or non-hiccup current limiting. If the RES pin is tied to VCC at initial power on, hiccup current limit is disabled.

### 7.3.9 Soft Start

The soft-start feature allows the regulator to gradually reach the steady-state operating point, thus reducing start-up stresses and surges. The LM5119 regulates the FB pin to the SS pin voltage or the internal 0.8-V reference, whichever is lower. At the beginning of the soft-start sequence when SS = 0 V, the internal 10-µA soft-start current source gradually increases the voltage on an external soft-start capacitor ($C_{SS}$) connected to the SS pin resulting in a gradual rise of the FB and output voltages.

Either regulator channel of the LM5119 can be disabled by pulling the corresponding SS pin to AGND.

### 7.3.10 HO and LO Output Drivers

The LM5119 contains a high current, high-side driver and associated high voltage level shift to drive the buck switch of each regulator channel. This gate driver circuit works in conjunction with an external diode and bootstrap capacitor. A 0.1-µF or larger ceramic capacitor, connected with short traces between the HB pin and SW pin, is recommended. During the OFF-time of the high-side MOSFET, the SW pin voltage is approximately 0 V and the bootstrap capacitor charges from VCC through the external bootstrap diode. When operating with a high PWM duty cycle, the buck switch is forced off each cycle for 320 ns to ensure that the bootstrap capacitor is recharged.

The LO and HO outputs are controlled with an adaptive dead-time methodology which insures that both outputs are never enabled at the same time. When the controller commands HO to be enabled, the adaptive dead-time logic first disables LO and waits for the LO voltage to drop. HO is then enabled after a small delay. Similarly, the LO turnon is disabled until the HO voltage has discharged. This methodology insures adequate dead-time for any size MOSFET.

Exercise care when selecting an output MOSFET with the appropriate threshold voltage, especially if VCC is supplied from the regulator output. During start-up at low input voltages the MOSFET threshold must be lower than the 4.9-V VCC undervoltage lockout threshold. Otherwise, there may be insufficient VCC voltage to completely turn on the MOSFET as VCC undervoltage lockout is released during start-up. If the buck switch MOSFET gate drive is not sufficient, the regulator may not start or it may hang up momentarily in a high power dissipation state. This condition can be avoided by selecting a MOSFET with a lower threshold voltage or if VCC is supplied from an external source higher than the output voltage. If the minimum input voltage programmed by the UVLO pin resistor divider is above the VCC regulation level, this precaution is of no concern.

### 7.3.11 Maximum Duty Cycle

When operating with a high PWM duty cycle, the buck switch is forced off each cycle for 320 ns to ensure the bootstrap capacitor is recharged and to allow time to sample and hold the current in the low-side MOSFET. This forced OFF-time limits the maximum duty cycle of the controller. When designing a regulator with high switching frequency and high duty cycle requirements, a check must be made of the required maximum duty cycle (including losses) against the graph shown in Figure 11.

$$D_{MAX} = 1 - f_{SW} \times 320 \times 10^{-9} \tag{6}$$

The actual maximum duty cycle varies with the operating frequency as shown in Equation 6.

## Feature Description (continued)

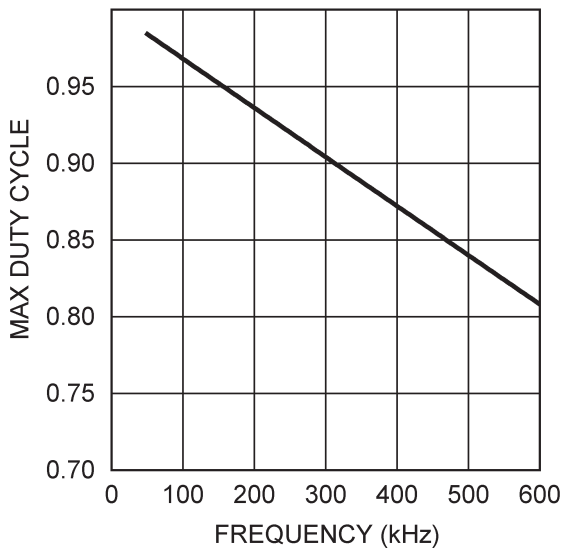


**Figure 11. Maximum Duty Cycle vs Switching Frequency**

### 7.3.12 Thermal Protection

Internal thermal shutdown circuitry is provided to protect the integrated circuit in the event the maximum junction temperature is exceeded. When activated, typically at 165°C, the controller is forced into a low power reset state, disabling the output driver and the VCC bias regulators. This feature is designed to prevent catastrophic failures from overheating and destroying the device.

## 7.4 Device Functional Modes

### 7.4.1 Diode Emulation

A fully synchronous buck regulator implemented with a free-wheel MOSFET rather than a diode has the capability to sink current from the output in certain conditions such as light load, overvoltage, or prebias start-up. The LM5119 provides a diode emulation feature that can be enabled to prevent reverse (drain to source) current flow in the low-side free-wheel MOSFET. When configured for diode emulation, the low-side MOSFET is disabled when reverse current flow is detected. The benefit of this configuration is lower power loss at no load or light load conditions and the ability to turn on into a prebiased output without discharging the output. The diode emulation mode allows for start-up into prebiased loads, because it prevents reverse current flow as the soft-start capacitor charges to the regulation level during start-up. The negative effect of diode emulation is degraded light load transient response times. Enabling the diode emulation feature is recommended and allows discontinuous conduction operation. The diode emulation feature is configured with the DEMB pin. To enable diode emulation, connect the DEMB pin to ground or leave the pin floating. If continuous conduction operation is desired, the DEMB pin must be tied to either VCC1 or VCC2.


Copyright © 2018, Texas Instruments Incorporated

# 8 Application and Implementation

**NOTE**

Information in the following applications sections is not part of the TI component specification, and TI does not warrant its accuracy or completeness. TI's customers are responsible for determining suitability of components for their purposes. Customers should validate and test their design implementation to confirm system functionality.

## 8.1 Application Information

### 8.1.1 Miscellaneous Functions

EN2 is left floating which allows channel2 to always remain enabled. If EN2 is pulled below 2 V, channel2 is disabled.

The DEMB pin is left floating because this design uses diode emulation. For fully synchronous (continuous conduction) operation, connect the DEMB to a voltage greater than 2.6 V.

VCCDIS is left floating to enable the internal VCC regulators. To disable the internal VCC regulators, connect this pin to a voltage greater than 1.25 V.

### 8.1.2 Interleaved Two-Phase Operation

Interleaved operation can offer many advantages in single-output, high-current applications. The output power path is split between two identical channels reducing the current in each channel by one-half. Ripple current reduction in the output capacitors is reduced significantly because each channel operates 180 degrees out of phase from the other. Ripple reduction is greatest at 50% duty cycle and decreases as the duty cycle varies away from 50%.

Refer to Figure 12 to estimate the ripple current reduction. Also, the effective ripple in the input and output capacitors occurs at twice the frequency of a single-channel design due to the combining of the two channels. All of these factors are advantageous in managing the higher currents and their effects in a high power design.

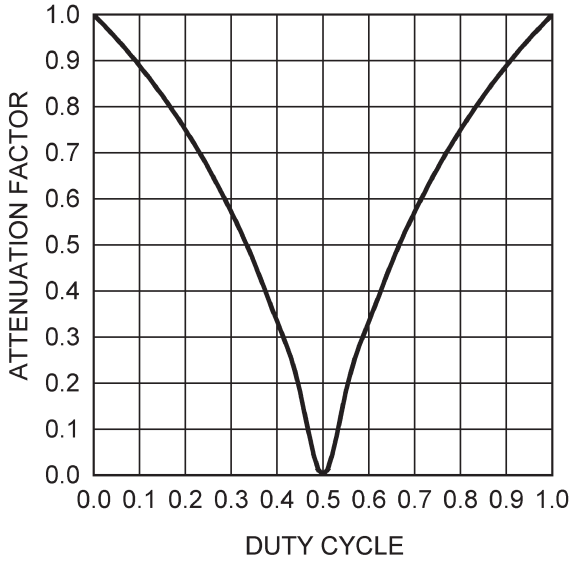


**Figure 12. Cancellation Factor vs Duty Cycle for Output Capacitor**

## Application Information (continued)

To begin an interleaved design, use the previous equations in this datasheet to first calculate the required value of components using one-half the current in the output power path. The attenuation factor in Figure 12 is the ratio of the output capacitor ripple to the inductor ripple versus duty cycle. The inductor ripple used in this calculation is the ripple in either inductor in a two phase design, not the ripple calculated for a single-phase design of the same output power. It can be observed that operation around 50% duty cycle results in almost complete ripple attenuation in the output capacitor. Figure 12 can be used to calculate the amount of ripple attenuation in the output capacitors.

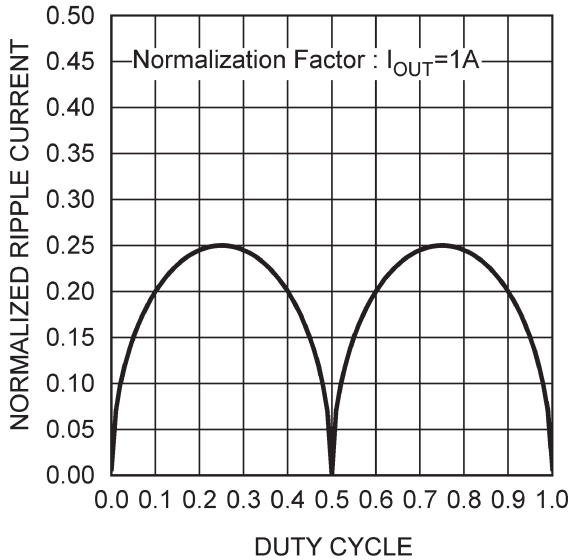


**Figure 13. Normalized Input Capacitor RMS Ripple Current vs Duty Cycle**

Figure 13 illustrates the ripple current reduction in the input capacitors due to interleaving. As with the output capacitors, there is near perfect ripple reduction near 50% duty cycle. This plot can be used to calculate the ripple in the input capacitors at any duty cycle. In designs with large duty cycle swings, use the worst-case ripple reduction for the design.

To configure the LM5119 for interleaved operation, connect COMP1 and COMP2 pins together at the IC. Connecting the FB2 pin to VCC2 pin disables the channel2 error amplifier with a high output impedance at COMP2. Connect the compensation network between FB1 and the common COMP pins. Connect the two power stages together at the output capacitors. Finally use the plots in Figure 12 and Figure 13 along with the duty cycle range to determine the amount of output and input capacitor ripple reduction. Frequently more capacitance than necessary is used in a design just to meet ESR requirements. Reducing the capacitance based solely on ripple reduction graphs alone may violate this requirement.

### 8.1.3 Interleaved 4-Phase Operation

Two LM5119Q devices can be designed for 4-phase operation with below configurations. The VCC shutdown and thermal shutdown on master device will shut down all four channels eventually by pulling down COMP bus. The VCC shutdown and thermal shutdown on slave device shuts down the device only under fault.

- To synchronize two devices and achieve phase shift, a 90 degree shifted clock should be applied to RT pins of master and slave devices
- Connect COMP pins of master and slave channels together.
- Connect FB pin of slave channel to local VCC pin.
- Connect RES pin to local VCC pin. This means hiccup model should be disabled.
- Connect all UVLO pins of master and slave channels together. This means the UVLO hysteresis current will be 4 times of 20-μA.


Copyright © 2018, Texas Instruments Incorporated

## 8.2 Typical Applications

### 8.2.1 Dual-output Design Example

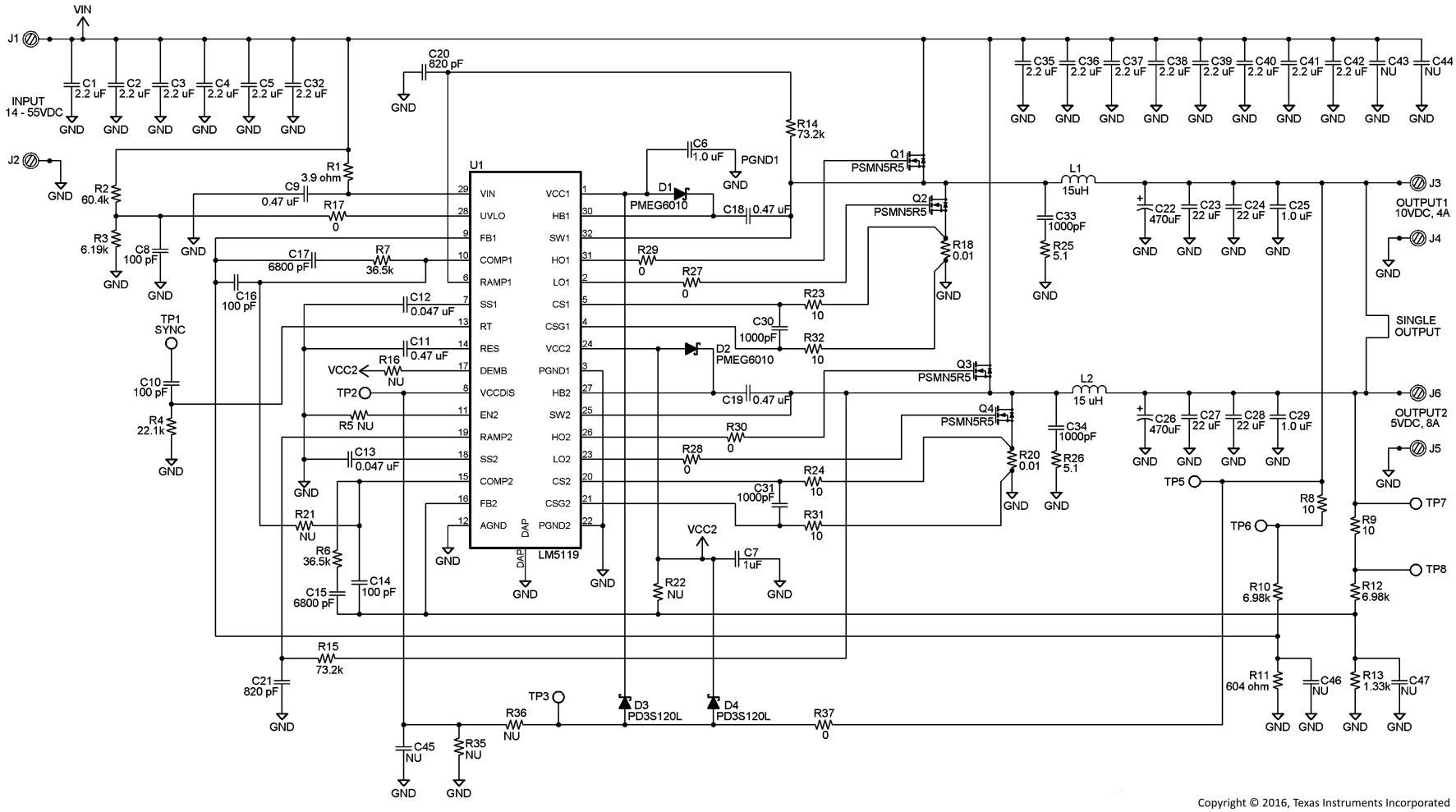


Copyright © 2016, Texas Instruments Incorporated

**Figure 14. 10-V 4-A, 5-V 8-A Dual Output Application**

#### 8.2.1.1 Design Requirements

The procedure for calculating the external components is illustrated with Figure 14. Only the values for the 5-V output are calculated because the procedure is the same for the 10-V output. The circuit shown in Figure 14 is configured for the following specifications:

- CH1 output voltage, $V_{OUT1}$ = 10 V
- CH2 output voltage, $V_{OUT2}$ = 5 V
- CH1 maximum load current, $I_{OUT1}$ = 4 A
- CH2 maximum load current, $I_{OUT2}$ = 8 A
- Minimum input voltage, $V_{IN(min)}$ = 14 V
- Maximum input voltage, $V_{IN(max)}$ = 55 V
- Switching frequency, $f_{SW}$ = 230 kHz

Some component values were chosen as a compromise between the 10-V and 5-V outputs to allow identical components to be used on both outputs. This design can be reconfigured in a dual-channel interleaved configuration with a single 10-V output which requires identical power channels.

#### 8.2.1.2 Detailed Design Procedure

##### 8.2.1.2.1 Timing Resistor

$R_T$ sets the switching frequency of each regulator channel. Generally, higher frequency applications are smaller but have higher losses. Operation at 230 kHz was selected for this example as a reasonable compromise between small size and high efficiency. The value of $R_T$ for 230-kHz switching frequency can be calculated with Equation 7.

$$R_T = \frac{5.2 \times 10^9}{f_{SW}} - 948 = 21.66\ k\Omega \tag{7}$$

A standard value or 22.1 kΩ was chosen for $R_T$. The internal oscillator frequency is twice the switching frequency and is approximately 460 kHz.

##### 8.2.1.2.2 Output Inductor

The inductor value is determined based on the operating frequency, load current, ripple current, and the input and output voltages.

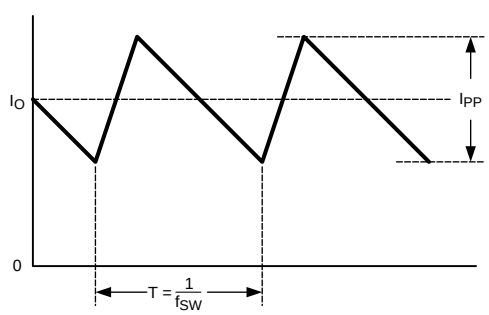


**Figure 15. Inductor Current**

Knowing the switching frequency, maximum ripple current ($I_{PP}$), maximum input voltage, and the nominal output voltage ($V_{OUT}$), the inductor value can be calculated with Equation 8.

$$L = \frac{V_{OUT}}{I_{PP} \times f_{SW}} \times \left(1 - \frac{V_{OUT}}{V_{IN(MAX)}}\right) \tag{8}$$


Copyright © 2018, Texas Instruments Incorporated

The maximum ripple current occurs at the maximum input voltage. Typically, $I_{PP}$ is 20% to 40% of the full load current. When operating in the diode emulation mode configuration, the maximum ripple current must be less than twice the minimum load current. For full synchronous operation, higher ripple current is acceptable. Higher ripple current allows for a smaller inductor size, but places more of a burden on the output capacitor to smooth the ripple current. For the example in Equation 9, a ripple current of 15% of 8 A was chosen as a compromise for the 10-V output.

$$L = \frac{5\ V}{0.15 \times 8A \times 230\ kHz} \times \left(1 - \frac{5\ V}{55\ V}\right) = 16.5\ \mu H \tag{9}$$

The nearest standard value of 15 µH was chosen for L. Using the value of 15 µH for L in Equation 10 as the example (Equation 11), calculate $I_{PP}$ again. This step is necessary if the chosen value of L differs significantly from the calculated value.

$$I_{PP} = \frac{V_{OUT}}{L \times f_{SW}} \times \left(1 - \frac{V_{OUT}}{V_{IN(MAX)}}\right) \tag{10}$$

$$I_{PP} = \frac{5\ V}{15\ \mu H \times 230\ kHz} \times \left(1 - \frac{5\ V}{55\ V}\right) = 1.32A \tag{11}$$

#### 8.2.1.2.3 Current Sense Resistor

Before determining the value of current sense resistor ($R_S$), it is valuable to understand the K factor, which is the ramp slope multiple chosen for slope compensation. The K factor can be varied from 1 to 3 in practice and is defined with Equation 12.

$$K = \frac{L}{10 \times R_S \times R_{RAMP} \times C_{RAMP}} \tag{12}$$

The performance of the converter varies depending on the selected K value (see Table 1). For this example, 2.5 was chosen as the K factor to minimize the power loss in sense resistor $R_S$ and the crosstalk between channels. Crosstalk between the two regulators under certain conditions may be observed on the output as switch jitter.

The maximum output current capability ($I_{OUT(MAX)}$) must be approximately 20% to 50% higher than the required output current, (8 A at $V_{OUT2}$) to account for tolerances and ripple current. For this example, 120% of 8 A was chosen (9.6 A). The current sense resistor value can be calculated with Equation 13 as the example (Equation 14).

$$R_S = \frac{V_{CS(TH)}}{I_{OUT(MAX)} + \frac{V_{OUT} \times K}{f_{SW} \times L} - \frac{I_{PP}}{2}}$$

where

- $V_{CS(TH)}$ is the current limit threshold voltage (120 mV) (13)

$$R_S = \frac{0.12}{9.6A + \frac{5\ V \times 2.5}{230\ kHz \times 15\ \mu H} - \frac{1.32A}{2}} = 0.0096 \tag{14}$$

A value of 10 mΩ was chosen for $R_S$. The sense resistor must be rated to handle the power dissipation at maximum input voltage when current flows through the free-wheel MOSFET for the majority of the PWM cycle. The maximum power dissipation of $R_S$ can be calculated with Equation 15 as the example (Equation 16).

$$P_{RS} = \left(1 - \frac{V_{OUT}}{V_{IN(MAX)}}\right) I_{OUT}{}^2 R_S \tag{15}$$

$$P_{RS} = \left(1 - \frac{5\ V}{55\ V}\right) \times 8^2 \times 0.01 = 0.58W \tag{16}$$

During output short condition, the worst-case peak inductor current is limited to Equation 17 and the example (Equation 18).

$$I_{LIM_PEAK} = \frac{V_{CS(TH)}}{R_S} + \frac{V_{IN(MAX)} t_{ON(MIN)}}{L}$$

where

- $t_{ON(MIN)}$ is the minimum HO ON-time which is nominally 100 ns (17)

$$I_{LIM_PEAK} = \frac{0.12}{0.01\Omega} + \frac{55\ V \times 100\ ns}{15\ \mu H} = 12.37A \quad (18)$$

The chosen inductor must be evaluated for this condition, especially at elevated temperature where the saturation current rating of the inductor may drop significantly. At the maximum input voltage with a shorted output, the valley current must fall below $V_{CS(TH)}$ / $R_S$ before the high-side MOSFET is allowed to turn on.

#### 8.2.1.2.4 Ramp Resistor and Ramp Capacitor

The value of ramp capacitor ($C_{RAMP}$) must be less than 2 nF to allow full discharge between cycles by the discharge switch internal to the LM5119. A good-quality, thermally-stable ceramic capacitor with 5% or less tolerance is recommended. For this design the value of $C_{RAMP}$ was set at the standard capacitor value of 820 pF. With the inductor, sense resistor and the K factor selected, the value of the ramp resistor ($R_{RAMP}$) can be calculated with Equation 19 as the example (Equation 20). The standard value of 73.2 kΩ was selected.

$$R_{RAMP} = \frac{L}{10 \times R_S \times K \times C_{RAMP}} \quad (19)$$

$$R_{RAMP} = \frac{15\ \mu H}{10 \times 0.01\Omega \times 2.5 \times 820\ pF} = 73.2\ k\Omega \quad (20)$$

#### 8.2.1.2.5 Output Capacitors

The output capacitors smooth the inductor ripple current and provide a source of charge during transient loading conditions. For this design example, a 470-µF electrolytic capacitor with 10-mΩ ESR was selected as the main output capacitor. The fundamental component of the output ripple voltage is approximated with Equation 21 as the example (Equation 22 and Equation 23).

$$\Delta V_{OUT} = I_{PP} \times \sqrt{ESR^2 + \left(\frac{1}{9 \times f_{SW} \times C_{OUT}}\right)^2} \quad (21)$$

$$\Delta V_{OUT} = 1.32A \times \sqrt{0.01\Omega^2 + \left(\frac{1}{9 \times 230\ kHz \times 470\ \mu F}\right)^2} \quad (22)$$

$$\Delta V_{OUT} = 13.3\ mV \quad (23)$$

Two 22-µF low ERS or ESL ceramic capacitors are placed in parallel with the 470-µF electrolytic capacitor to further reduce the output voltage ripple and spikes.

**Table 1. Performance Variation by K Factor**

| | K < 1 | 1 <— K —> 3 | | K > 3 |
|---|---|---|---|---|
| Cross talk | Sub-harmonic oscillation may occur | Higher | Lower | Introduces additional pole near crossover frequency |
| Peak inductor current with short output condition | | Lower | Higher | |
| Inductor size | | Smaller | Larger | |
| Power dissipation of Rs | | Higher | Lower | |
| Efficiency | | Lower | Higher | |


Copyright © 2018, Texas Instruments Incorporated

#### 8.2.1.2.6 Input Capacitors

The regulator input supply voltage typically has high source impedance at the switching frequency. Good-quality input capacitors are necessary to limit the ripple voltage at the VIN pin while supplying most of the switch current during the ON-time. When the buck switch turns on, the current into the buck switch steps to the valley of the inductor current waveform, ramps up to the peak value, and then drops to the zero at turnoff. The input capacitance must be selected for RMS current rating and minimum ripple voltage. A good approximation for the required ripple current rating necessary is $I_{RMS} > I_{OUT} / 2$. Seven 2.2-µF ceramic capacitors were used for each channel. With ceramic capacitors, the input ripple voltage is triangular. The input ripple voltage with one channel operating is approximately Equation 24 as the example (Equation 25).

$$\Delta V_{IN} = \frac{I_{OUT}}{4 \times f_{SW} \times C_{IN}} \tag{24}$$

$$\Delta V_{IN} = \frac{8A}{4 \times 230\ kHz \times 15.4\ \mu F} = 0.565\ V \tag{25}$$

The ripple voltage of the input capacitors is reduced significantly with dual-channel operation because each channel operates 180 degrees out of phase from the other. Capacitors connected in parallel must be evaluated for RMS current rating. The current splits between the input capacitors based on the relative impedance of the capacitors at the switching frequency.

When the converter is connected to an input power source, a resonant circuit is formed by the line inductance and the input capacitors. To minimize overshoot make $C_{IN} > 10 \times L_{IN}$. The characteristic source impedance ($Z_S$) and resonant frequency ($f_S$) are Equation 26 and the example (Equation 27).

$$Z_S = \sqrt{\frac{L_{IN}}{C_{IN}}} \tag{26}$$

$$f_S = \frac{1}{2\pi\sqrt{L_{IN} \times C_{IN}}}$$

where

- $L_{IN}$ is the inductance of the input wire (27)

The converter exhibits negative input impedance which is lowest at the minimum input voltage in Equation 28.

$$Z_{IN} = \frac{V_{IN}^2}{P_{OUT}} \tag{28}$$

The damping factor for the input filter is given by Equation 29.

$$\delta = \frac{1}{2} \times \left( \frac{R_{IN} + ESR}{Z_S} + \frac{Z_S}{Z_{IN}} \right)$$

where

- $R_{IN}$ is the input wiring resistance
- ESR is the equivalent series resistance of the input capacitors (29)

When $\delta = 1$, the input filter is critically damped. This may be difficult to achieve with practical component values. With $\delta < 0.2$, the input filter exhibits significant ringing. If $\delta$ is zero or negative, there is not enough resistance in the circuit and the input filter sustains an oscillation. When operating near the minimum input voltage, a bulk aluminum electrolytic capacitor across $C_{IN}$ may be needed to damp the input for a typical bench test setup.

#### 8.2.1.2.7 VCC Capacitor

The primary purpose of the VCC capacitor ($C_{VCC}$) is to supply the peak transient currents of the LO driver and bootstrap diode as well as provide stability for the VCC regulator. These peak currents can be several amperes. TI recommends the value of $C_{VCC}$ be no smaller than 0.47 µF, and be a good-quality, low-ESR, ceramic capacitor located at the pins of the IC to minimize potentially damaging voltage transients caused by trace inductance. A value of 1 µF was selected for this design.

#### 8.2.1.2.8 Bootstrap Capacitor

The bootstrap capacitor between the HB and SW pins supplies the gate current to charge the high-side MOSFET gate at each cycle's turnon and recovery charge for the bootstrap diode. These current peaks can be several amperes. TI recommends the value of the bootstrap capacitor be at least 0.1 µF, and be a good-quality, low-ESR, ceramic capacitor located at the pins of the IC to minimize potentially damaging voltage transients caused by trace inductance. The absolute minimum value for the bootstrap capacitor is calculated with Equation 30. A value of 0.47 µF was selected for this design.

$$C_{HB} \geq \frac{Q_g}{\Delta V_{HB}}$$

where

- $Q_g$ is the high-side MOSFET gate charge
- $\Delta V_{HB}$ is the tolerable voltage droop on $C_{HB}$ (which is typically less than 5% of VCC) (30)

#### 8.2.1.2.9 Soft-Start Capacitor

The capacitor at the SS pin ($C_{SS}$) determines the soft-start time ($t_{SS}$), which is the time for the output voltage to reach the final regulated value. The value of $C_{SS}$ for a given time is determined from Equation 31. For this application, a value of 0.047 µF was chosen for a soft-start time of 3.8 ms.

$$C_{SS} = \frac{t_{SS} \times 10\ \mu A}{0.8\ V} \tag{31}$$

#### 8.2.1.2.10 Restart Capacitor

The restart pin sources 10 µA into the external restart capacitor ($C_{RES}$). The value of the restart capacitor is given by Equation 32. For this application, a value of 0.47 µF was chosen for a restart time of 59 ms.

$$C_{RES} = \frac{10\ \mu A \times t_{RES}}{1.25\ V}$$

where

- $t_{RES}$ is the time the LM5119 remains off before a restart attempt in hiccup mode current limiting (32)

#### 8.2.1.2.11 Output Voltage Divider

$R_{FB1}$ and $R_{FB2}$ set the output voltage level, the ratio of these resistors is calculated from Equation 33.

$$\frac{R_{FB2}}{R_{FB1}} = \frac{V_{OUT}}{0.8\ V} - 1 \tag{33}$$

1.33 kΩ was chosen for $R_{FB1}$ in this design which results in a $R_{FB2}$ value of 6.98 kΩ for $V_{OUT2}$ of 5 V. A reasonable guide is to select the value of $R_{FB1}$ in the range between 500 Ω and 10 kΩ. The value of $R_{FB1}$ must be large enough to keep the total divider power dissipation small.

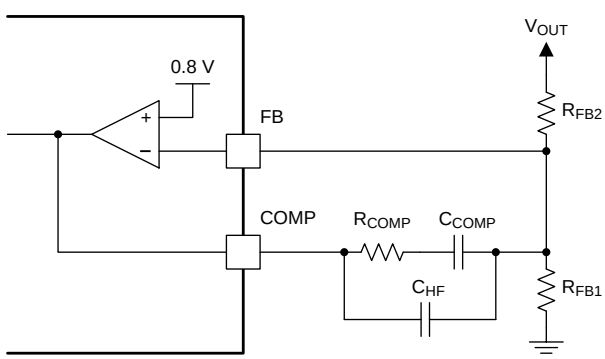


**Figure 16. Feedback Configuration**


Copyright © 2018, Texas Instruments Incorporated

#### 8.2.1.2.12 UVLO Divider

The UVLO threshold is internally set to 1.25 V at the UVLO pin. The LM5119 is enabled when the system input voltage VIN causes the UVLO pin to exceed the threshold voltage of 1.25 V. When the UVLO pin voltage is below the threshold, the internal 20-µA current source is disabled. When the UVLO pin voltage exceeds the 1.25-V threshold, the 20-µA current source is enabled causing the UVLO pin voltage to increase, providing hysteresis. The values of $R_{UV1}$ and $R_{UV2}$ can be determined from Equation 34 and the example (Equation 35).

$$R_{UV2} = \frac{V_{HYS}}{20\ \mu A} \tag{34}$$

$$R_{UV1} = \frac{1.25\ V \times R_{UV2}}{V_{IN} - 1.25} \tag{35}$$

$V_{HYS}$ is the desired UVLO hysteresis at VIN, and VIN in the second equation is the desired UVLO release (turnon) voltage. For example, if it is desired for the LM5119 to be enabled when VIN reaches 13.5 V, and the desired hysteresis is 1.2 V, then $R_{UV2}$ must be set to 60 kΩ and $R_{UV1}$ must be set to 6.12 kΩ. For this application, $R_{UV2}$ was selected to be 60.4 kΩ, $R_{UV1}$was selected to be 6.19 kΩ. The LM5119 can be remotely shutdown by taking the UVLO pin below 0.4 V with an external open-collector or open-drain device. The outputs and the VCC regulator are disabled in shutdown mode. Capacitor $C_{FT}$ provides filtering for the divider. A value of 100 pF was chosen for $C_{FT}$. The voltage at the UVLO pin must never exceed 15 V when using the external set-point divider. It may be necessary to clamp the UVLO pin at high input voltages.

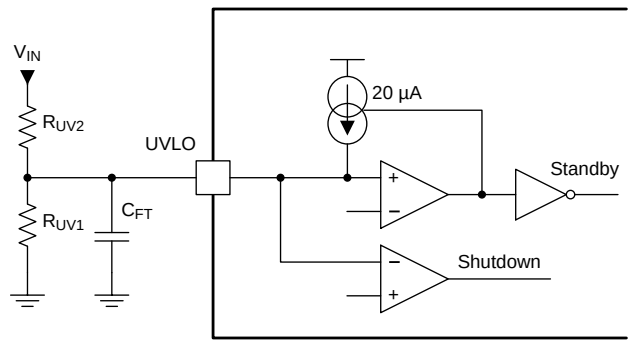


**Figure 17. UVLO Configuration**

##### *8.2.1.2.12.1 MOSFET Selection*

Selection of the power MOSFETs is governed by the same tradeoffs as switching frequency. Breaking down the losses in the high-side and low-side MOSFETs is one way to compare the relative efficiencies of different devices. When using discrete SO-8 MOSFETs, generally the output current capability range is 2 A to 10 A. Losses in the power MOSFETs can be broken down into conduction loss, gate charging loss, and switching loss. Conduction loss $P_{DC}$ is approximately Equation 36 and the example (Equation 37).

$$P_{DC(HO-MOSFET)} = D \times (I_O^2 \times R_{DS(ON)} \times 1.3)$$
$$P_{DC(LO-MOSFET)} = (1 - D) \times (I_O^2 \times R_{DS(ON)} \times 1.3) \tag{36}$$

where

- D is the duty cycle
- The 1.3 factor accounts for the increase in MOSFET on-resistance due to heating (37)

Alternatively, the factor of 1.3 can be eliminated and the high temperature ON-resistance of the MOSFET can be estimated using the $R_{DS(ON)}$ vs Temperature curves in the MOSFET datasheet. Gate charging loss, $P_{GC}$, results from the current driving the gate capacitance of the power MOSFETs and is approximated with Equation 38.

$$P_{GC} = n \times V_{CC} \times Q_g \times f_{SW}$$

where

- $Q_g$ refers to the total gate charge of an individual MOSFET
- n is the number of MOSFETs (38)

Gate charge loss differs from conduction and switching losses in that the actual dissipation occurs in the LM5119 and not in the MOSFET itself. Further loss in the LM5119 is incurred if the gate driving current is supplied by the internal linear regulator. In this example, VCC is supplied from the 10-V output through a diode to minimize the loss of the internal linear regulator.

Switching loss occurs during the brief transition period as the MOSFET turns on and off. During the transition period both current and voltage are present in the channel of the MOSFET. The switching loss can be approximated with Equation 39.

$$P_{SW} = 0.5 \times V_{IN} \times I_O \times (t_R + t_F) \times f_{SW}$$

where

- $t_R$ and $t_F$ are the rise and fall times of the MOSFET (39)

The rise and fall times are usually mentioned in the MOSFET datasheet or can be empirically observed with an oscilloscope. Switching loss is calculated for the high-side MOSFET only. Switching loss in the low-side MOSFET is negligible because the body diode of the low-side MOSFET turns on before the MOSFET itself, minimizing the voltage from drain to source before turnon. For this example, the maximum drain-to-source voltage applied to either MOSFET is 55 V. The selected MOSFETs must be able to withstand 55 V plus any ringing from drain to source, and be able to handle at least the VCC voltage plus any ringing from gate to source. A good choice of MOSFET for the 55-V input design example is the PSMN5R5. It has an $R_{DS(ON)}$ of 5.2 mΩ and total gate charge of 56 nC. In applications where a high step-down ratio is maintained in normal operation, efficiency may be optimized by choosing a high-side MOSFET with lower $Q_g$, and low-side MOSFET with lower $R_{DS(ON)}$.

#### 8.2.1.2.13 MOSFET Snubber

A resistor-capacitor snubber network across the low-side MOSFET reduces ringing and spikes at the switching node. Excessive ringing and spikes can cause erratic operation and couple noise to the output. Selecting the values for the snubber is best accomplished through empirical methods. First, make sure the lead lengths for the snubber connections are very short. Start with a resistor value between 5 and 50 Ω. Increasing the value of the snubber capacitor results in more damping, but higher snubber losses. Select a minimum value for the snubber capacitor that provides adequate damping of the spikes on the switch waveform at high load. A snubber may not be necessary with an optimized layout.

#### 8.2.1.2.14 Error Amplifier Compensation

$R_{COMP}$, $C_{COMP}$, and $C_{HF}$ configure the error amplifier gain characteristics to accomplish a stable voltage loop gain. One advantage of current mode control is the ability to close the loop with only two feedback components, $R_{COMP}$ and $C_{COMP}$. The voltage loop gain is the product of the modulator gain and the error amplifier gain. For the 5-V output design example, the modulator is treated as an ideal voltage-to-current converter. The DC modulator gain of the LM5119 can be modeled with Equation 40.

$$DC_GAIN_{(MOD)} = \frac{R_{LOAD}}{(A \times R_S)} \tag{40}$$

**NOTE**

A is the gain of the current sense amplifier which is 10 in the LM5119

The dominant low frequency pole of the modulator is determined by the load resistance ($R_{LOAD}$) and output capacitance ($C_{OUT}$). The corner frequency of this pole is calculated with Equation 41.

$$f_{P(MOD)} = \frac{1}{(2\pi \times R_{LOAD} \times C_{OUT})} \tag{41}$$

For $R_{LOAD}$ = 5 V / 8 A = 0.625 Ω and $C_{OUT}$ = 514 µF (effective) then $f_{P(MOD)}$ = 496 Hz.

DC $Gain_{(MOD)}$ = 0.625 Ω / (10 x 10 mΩ) = 6.25 = 15.9 dB.

For the 5-V design example, the modulator gain versus frequency characteristic is shown in Figure 18.


Copyright © 2018, Texas Instruments Incorporated

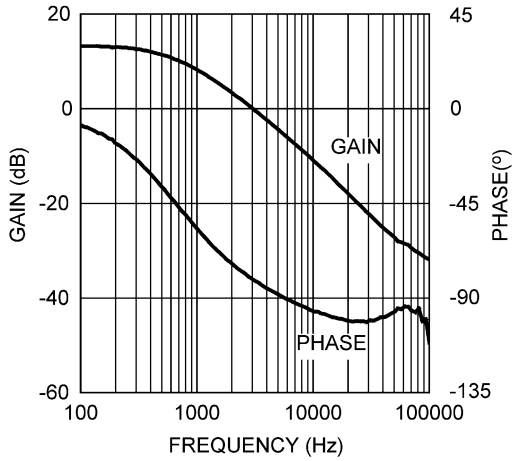


**Figure 18. Modulator Gain and Phase**

Components $R_{COMP}$ and $C_{COMP}$ configure the error amplifier as a Type II configuration. The DC gain of the amplifier is 80 dB with a pole at 0 Hz and a zero at $f_{ZEA} = 1 / (2 \pi \times R_{COMP} \times C_{COMP})$. The error amplifier zero cancels the modulator pole leaving a single pole response at the crossover frequency of the voltage loop. A single pole response at the crossover frequency yields a very stable loop with 90 degrees of phase margin. For the design example, a conservative target loop bandwidth (crossover frequency) of 11 kHz was selected. The compensation network zero ($f_{ZEA}$) must be selected at least an order of magnitude less than the target crossover frequency. This constrains the product of $R_{COMP}$ and $C_{COMP}$ for a desired compensation network zero $1 / (2 \pi \times R_{COMP} \times C_{COMP})$ to be approximately 1.1 kHz. Increasing $R_{COMP}$, while proportionally decreasing $C_{COMP}$, increases the error amp gain. Conversely, decreasing $R_{COMP}$ while proportionally increasing $C_{COMP}$, decreases the error amp gain. For the design example $C_{COMP}$ was selected as 6800 pF and $R_{COMP}$ was selected as 36.5 kΩ. These values configure the compensation network zero at 640 Hz. The error amp gain at frequencies greater than $f_{ZEA}$ is: $R_{COMP} / R_{FB2}$, which is approximately 5.22 (14.3 dB).

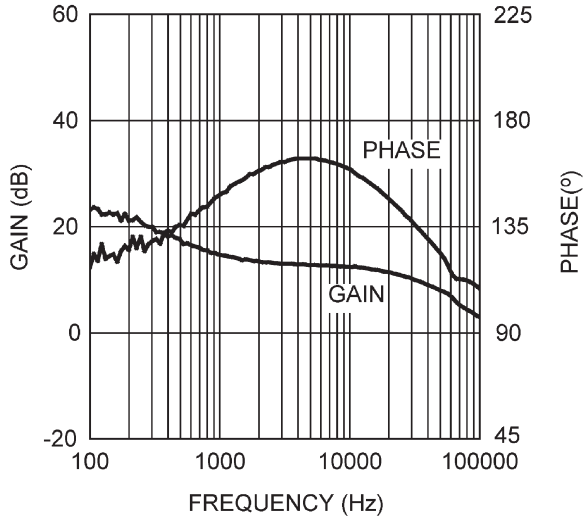


**Figure 19. Error Amplifier Gain and Phase**

The overall voltage loop gain can be predicted as the sum (in dB) of the modulator gain and the error amp gain.

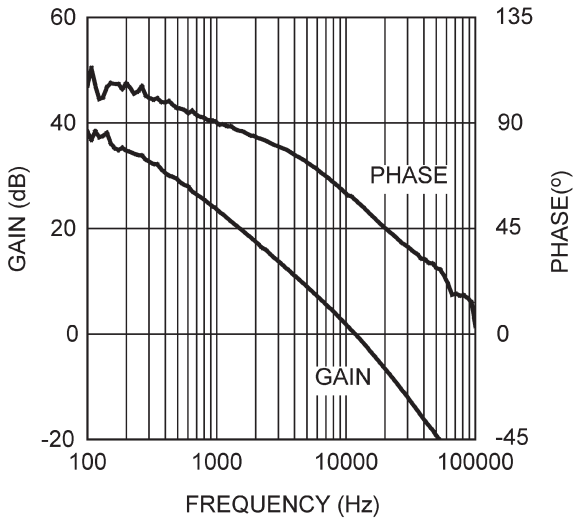


**Figure 20. Overall Voltage Loop Gain and Phase**

If a network analyzer is available, the modulator gain can be measured and the error amplifier gain can be configured for the desired loop transfer function. If the K factor is between 2 and 3, the stability must be checked with the network analyzer. If a network analyzer is not available, the error amplifier compensation components can be designed with the guidelines given. Step load transient tests can be performed to verify acceptable performance. The step load goal is minimum overshoot with a damped response. $C_{HF}$ can be added to the compensation network to decrease noise susceptibility of the error amplifier. The value of $C_{HF}$ must be sufficiently small because the addition of this capacitor adds a pole in the error amplifier transfer function. This pole must be well beyond the loop crossover frequency. A good approximation of the location of the pole added by $C_{HF}$ is: $f_{P2} = f_{ZEA} \times C_{COMP} / C_{HF}$. The value of $C_{HF}$ was selected as 100 pF for the design example.

#### *8.2.1.3 Application Curves*

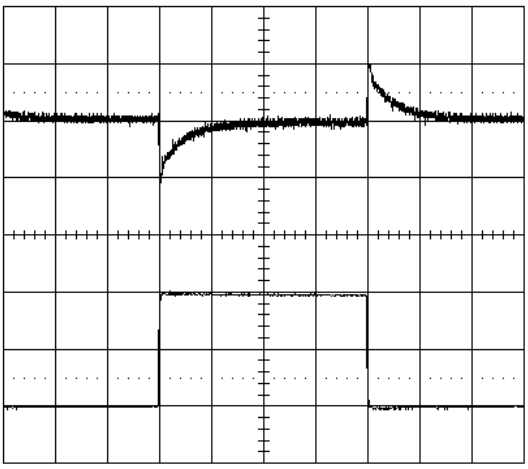

$V_{IN}$ = 24 Vdc
Top trace: $V_{OUT}$ = 3.3 V, 100 mV/div, AC-coupled
Horizontal resolution: 0.5 ms/div
$I_{OUT}$ rising from 2 A to 6 A
Bottom trace: $I_{OUT}$, 2 A/div

**Figure 21. Load Transient Response**

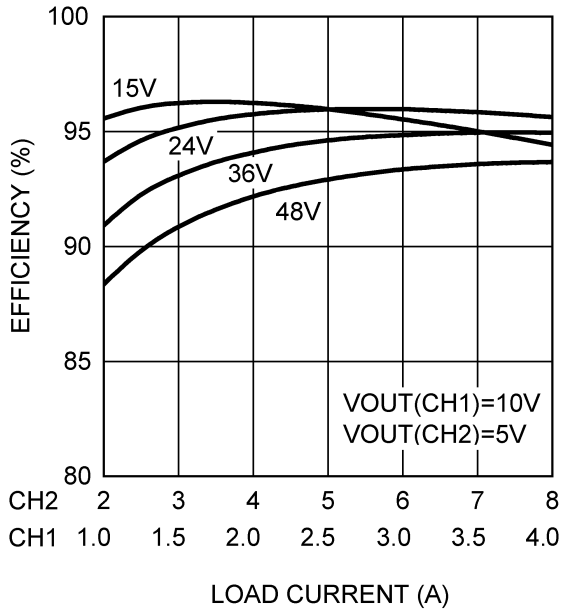


**Figure 22. Typical Efficiency vs Load Current**


Copyright © 2018, Texas Instruments Incorporated

### 8.2.2 Two-Phase Design Example

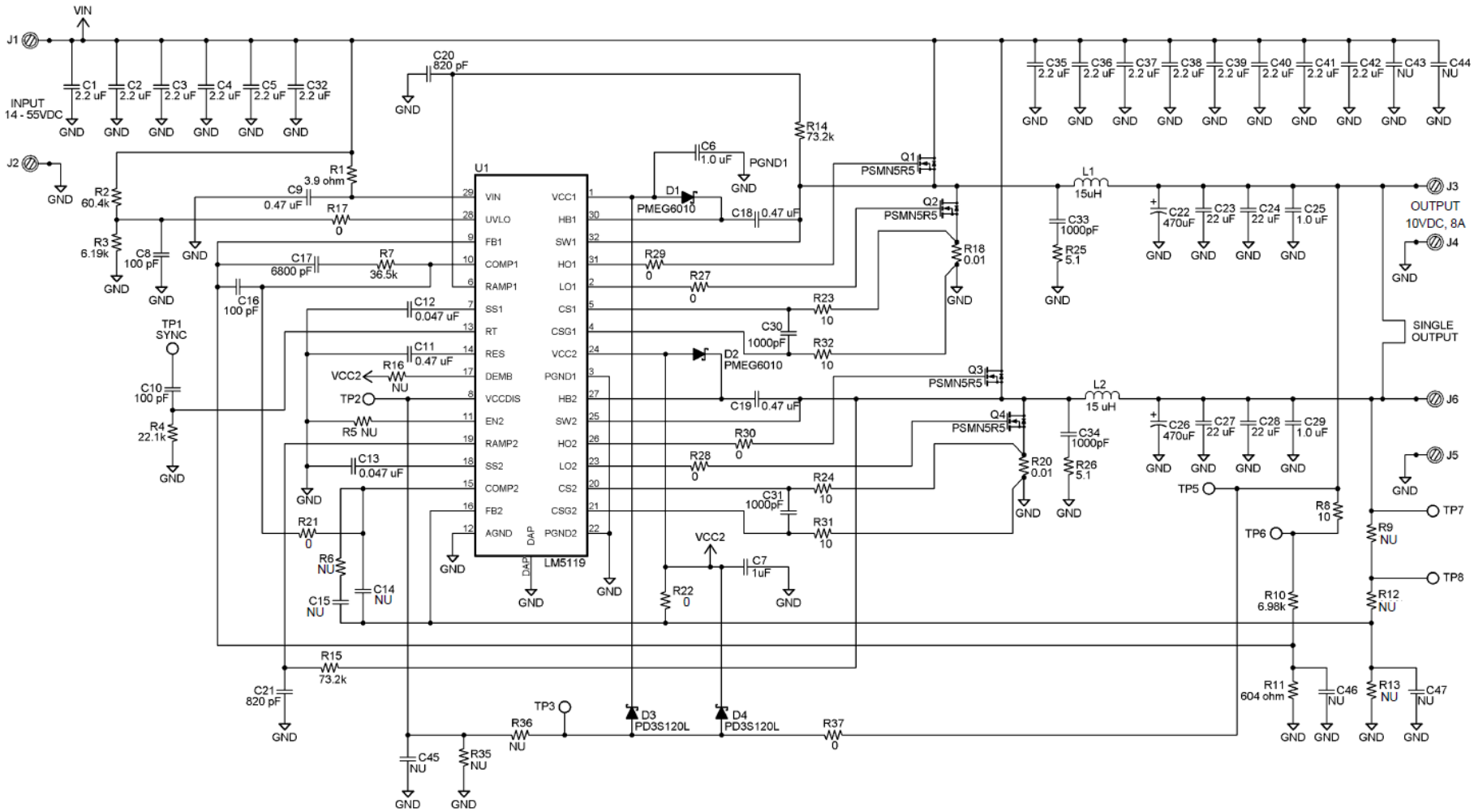


**Figure 23. Two-Phase Design Example**

#### 8.2.2.1 Design Requirements

Below are the design requirements for two-phase operation.

- Output voltage, $V_{OUT}$ = 10 V
- Load current, $I_{OUT}$ = 8 A
- Minimum input voltage, $V_{IN(min)}$ = 14 V
- Maximum input voltage, $V_{IN(max)}$ = 55 V
- Switching frequency, $f_{SW}$ = 230 kHz

#### 8.2.2.2 Detailed Design Procedure

Refer to the design procedure of dual-output example to select external components. In the device evaluation board (schematic shown in ) interleaved operation can be enabled by shorting both outputs together (with identical components in the power train), and using zero ohm resistors for R22 and R21. This shorts VCC2 to FB2 and COMP2 to COMP1 respectively. Also the channel2 feedback network C14, R6, and C15 must be removed.

#### 8.2.2.3 Application Curves

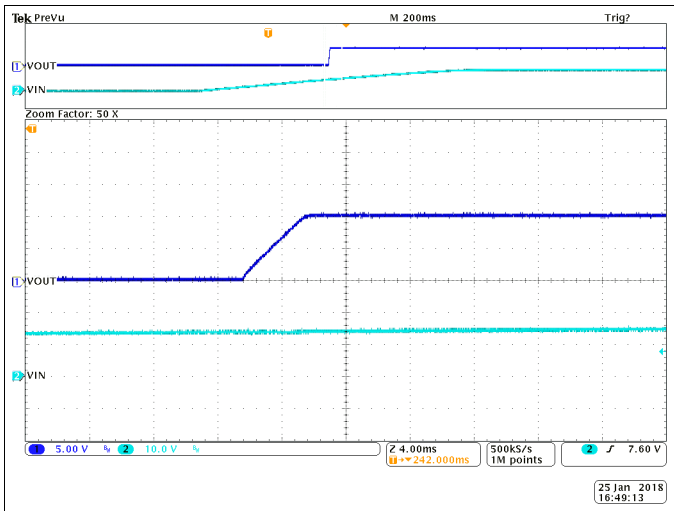


$V_{IN}$ = 12 V
$I_{OUT}$ = 16 A
$V_{OUT}$ = 3.3 V

**Figure 24. VIN Startup**

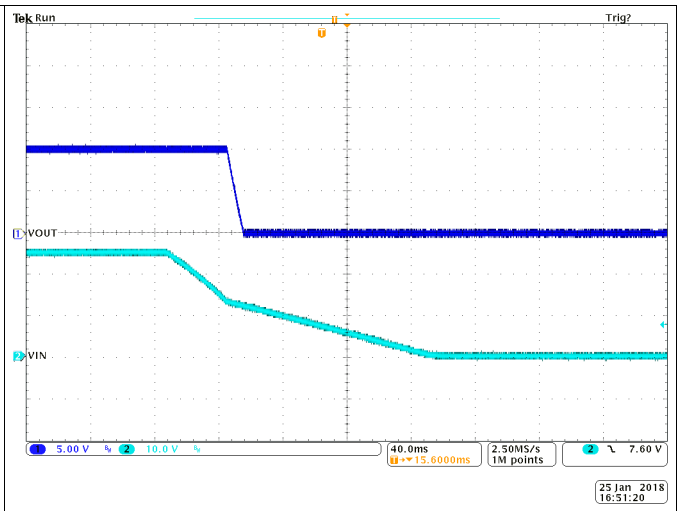


$V_{IN}$ = 12 V
$I_{OUT}$ = 1 A
$V_{OUT}$ = 3.3 V

**Figure 25. VIN Shutdown**


Copyright © 2018, Texas Instruments Incorporated

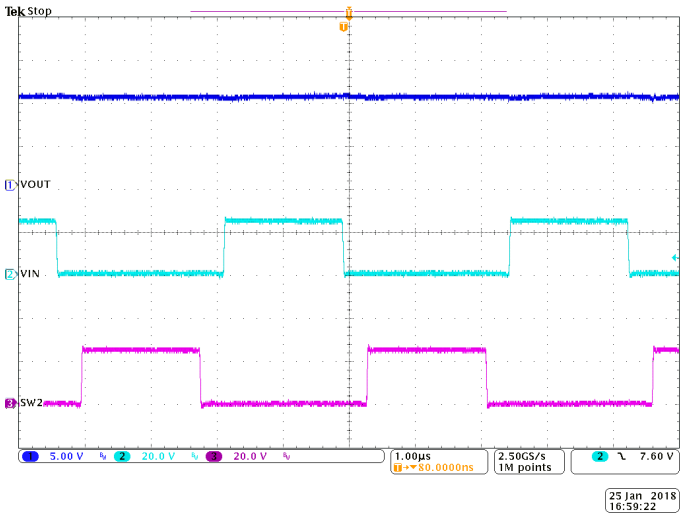


$V_{IN}$ = 12 V
$I_{OUT}$ = 16 A

$V_{OUT}$ = 3.3 V

**Figure 26. Switching**

# 9 Power Supply Recommendations

LM5119 is a power management device. The power supply for the device is an DC voltage source within the specified input range.

# 10 Layout

## 10.1 Layout Guidelines

The LM5119 consists of two integrated regulators operating almost independently. Crosstalk between the two regulators under certain conditions may be observed as switch jitter. This effect is common for any dual-channel regulator. Crosstalk effects are usually most severe when one channel is operating around 50% duty cycle. Careful layout practices help to minimize this effect. The following board layout guidelines apply specifically to the LM5119 and must be followed for best performance.

1. Keep the Loop1 and Loop2, shown in Figure 27, as small as possible
2. Keep the signal and power grounds separate
3. Place VCC capacitors (C6, C7) and VIN capacitor (C9) as closes as possible to the LM5119
4. Route CS and CSG traces together with Kelvin connection to the sense resistor
5. Connect AGND and PGND directly to the underside exposed pad
6. Ensure there are no high current paths beneath the underside exposed pad

### 10.1.1 Switching Jitter Root Causes and Solutions

1. Noise coupling of the high frequency switching between two channels through the input power rail
   1. Keep the high current path as short as possible
   2. Choose a FET with minimum lead inductance
   3. Place local bypass capacitors ($C_{IN1}$, $C_{IN2}$) as close as possible to the high-side FETs to isolate one channel from the high frequency noise of the other channel
   4. Slow down the SW switching speed by increasing gate resistors R29 and R30
   5. Minimize the effective ESR or ESL of the input capacitor by paralleling input capacitors
2. High frequency AC noise on FB, CS, CSG and COMP
   1. Use the star ground PCB layout technique and minimize the length of the high current path
   2. Keep the signal traces away from the SW, HO, HB traces and the inductor
   3. Add an R-C filter between the CS and CSG pins
   4. Place CS filter capacitor (C30, C31) next to the LM5119 and on the same PCB layer as the LM5119
3. Ground offset at the switching frequency
   1. Use the star ground PCB layout technique and minimize the length between the grounds of $C_{IN1}$and $C_{IN2}$


Copyright © 2018, Texas Instruments Incorporated

## 10.2 Layout Example

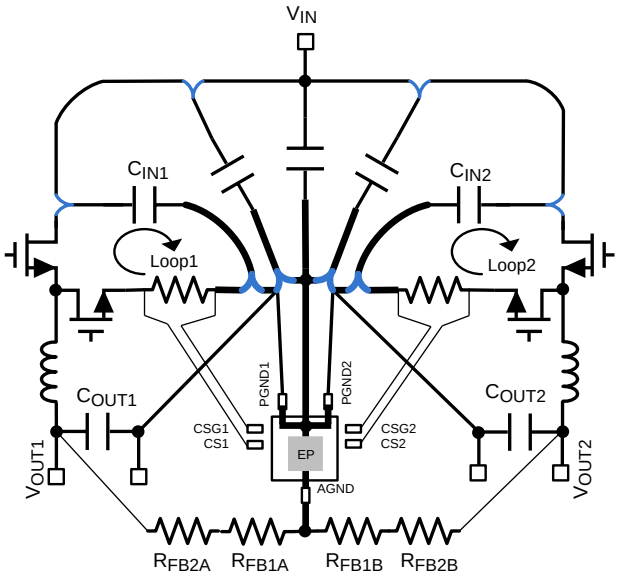


The bold lines indicate a solid ground plane. Make the traces to the widest and the shortest and use the star ground technique.

These lines indicate the high current paths. Make the traces as wide and short as possible

These lines indicate the small signal paths. The traces can be narrow but keep them away from any radiated noise and away from traces that may couple noise capacitively

These points require the maximum bypassing of the high frequency switching noise. Isolate each channel from the high frequency switching noise of the other channel.

**Figure 27. Recommended PCB Layout**

# 11 Device and Documentation Support

## 11.1 Receiving Notification of Documentation Updates

To receive notification of documentation updates, navigate to the device product folder on ti.com. In the upper right corner, click on *Alert me* to register and receive a weekly digest of any product information that has changed. For change details, review the revision history included in any revised document.

## 11.2 Community Resources

The following links connect to TI community resources. Linked contents are provided "AS IS" by the respective contributors. They do not constitute TI specifications and do not necessarily reflect TI's views; see TI's Terms of Use.

**TI E2E™ Online Community** ***TI's Engineer-to-Engineer (E2E) Community.*** Created to foster collaboration among engineers. At e2e.ti.com, you can ask questions, share knowledge, explore ideas and help solve problems with fellow engineers.

**Design Support** ***TI's Design Support*** Quickly find helpful E2E forums along with design support tools and contact information for technical support.

## 11.3 Trademarks

E2E is a trademark of Texas Instruments.
All other trademarks are the property of their respective owners.

## 11.4 Electrostatic Discharge Caution

These devices have limited built-in ESD protection. The leads should be shorted together or the device placed in conductive foam during storage or handling to prevent electrostatic damage to the MOS gates.

## 11.5 Glossary

SLYZ022 — *TI Glossary*.

This glossary lists and explains terms, acronyms, and definitions.

# 12 Mechanical, Packaging, and Orderable Information

The following pages include mechanical, packaging, and orderable information. This information is the most current data available for the designated devices. This data is subject to change without notice and revision of this document. For browser-based versions of this data sheet, refer to the left-hand navigation.


Copyright © 2018, Texas Instruments Incorporated

## PACKAGING INFORMATION

| Orderable part number | Status (1) | Material type (2) | Package \| Pins | Package qty \| Carrier | RoHS (3) | Lead finish/ Ball material (4) | MSL rating/ Peak reflow (5) | Op temp (°C) | Part marking (6) |
|---|---|---|---|---|---|---|---|---|---|
| LM5119QPSQ/NOPB | Active | Production | WQFN (RTV) \| 32 | 1000 \| SMALL T&R | Yes | SN | Level-3-260C-168 HR | -40 to 125 | L5119Q |
| LM5119QPSQ/NOPB.A | Active | Production | WQFN (RTV) \| 32 | 1000 \| SMALL T&R | Yes | SN | Level-3-260C-168 HR | -40 to 125 | L5119Q |
| LM5119QPSQX/NOPB | Active | Production | WQFN (RTV) \| 32 | 4500 \| LARGE T&R | Yes | SN | Level-3-260C-168 HR | -40 to 125 | L25119Q |
| LM5119QPSQX/NOPB.A | Active | Production | WQFN (RTV) \| 32 | 4500 \| LARGE T&R | Yes | SN | Level-3-260C-168 HR | -40 to 125 | L25119Q |

(1) **Status:** For more details on status, see our product life cycle.

(2) **Material type:** When designated, preproduction parts are prototypes/experimental devices, and are not yet approved or released for full production. Testing and final process, including without limitation quality assurance, reliability performance testing, and/or process qualification, may not yet be complete, and this item is subject to further changes or possible discontinuation. If available for ordering, purchases will be subject to an additional waiver at checkout, and are intended for early internal evaluation purposes only. These items are sold without warranties of any kind.

(3) **RoHS values:** Yes, No, RoHS Exempt. See the TI RoHS Statement for additional information and value definition.

(4) **Lead finish/Ball material:** Parts may have multiple material finish options. Finish options are separated by a vertical ruled line. Lead finish/Ball material values may wrap to two lines if the finish value exceeds the maximum column width.

(5) **MSL rating/Peak reflow:** The moisture sensitivity level ratings and peak solder (reflow) temperatures. In the event that a part has multiple moisture sensitivity ratings, only the lowest level per JEDEC standards is shown. Refer to the shipping label for the actual reflow temperature that will be used to mount the part to the printed circuit board.

(6) **Part marking:** There may be an additional marking, which relates to the logo, the lot trace code information, or the environmental category of the part.

Multiple part markings will be inside parentheses. Only one part marking contained in parentheses and separated by a "~" will appear on a part. If a line is indented then it is a continuation of the previous line and the two combined represent the entire part marking for that device.

**Important Information and Disclaimer:**The information provided on this page represents TI's knowledge and belief as of the date that it is provided. TI bases its knowledge and belief on information provided by third parties, and makes no representation or warranty as to the accuracy of such information. Efforts are underway to better integrate information from third parties. TI has taken and continues to take reasonable steps to provide representative and accurate information but may not have conducted destructive testing or chemical analysis on incoming materials and chemicals. TI and TI suppliers consider certain information to be proprietary, and thus CAS numbers and other limited information may not be available for release.

In no event shall TI's liability arising out of such information exceed the total purchase price of the TI part(s) at issue in this document sold by TI to Customer on an annual basis.

RTV (S-PWQFN-N32) PLASTIC QUAD FLATPACK NO-LEAD

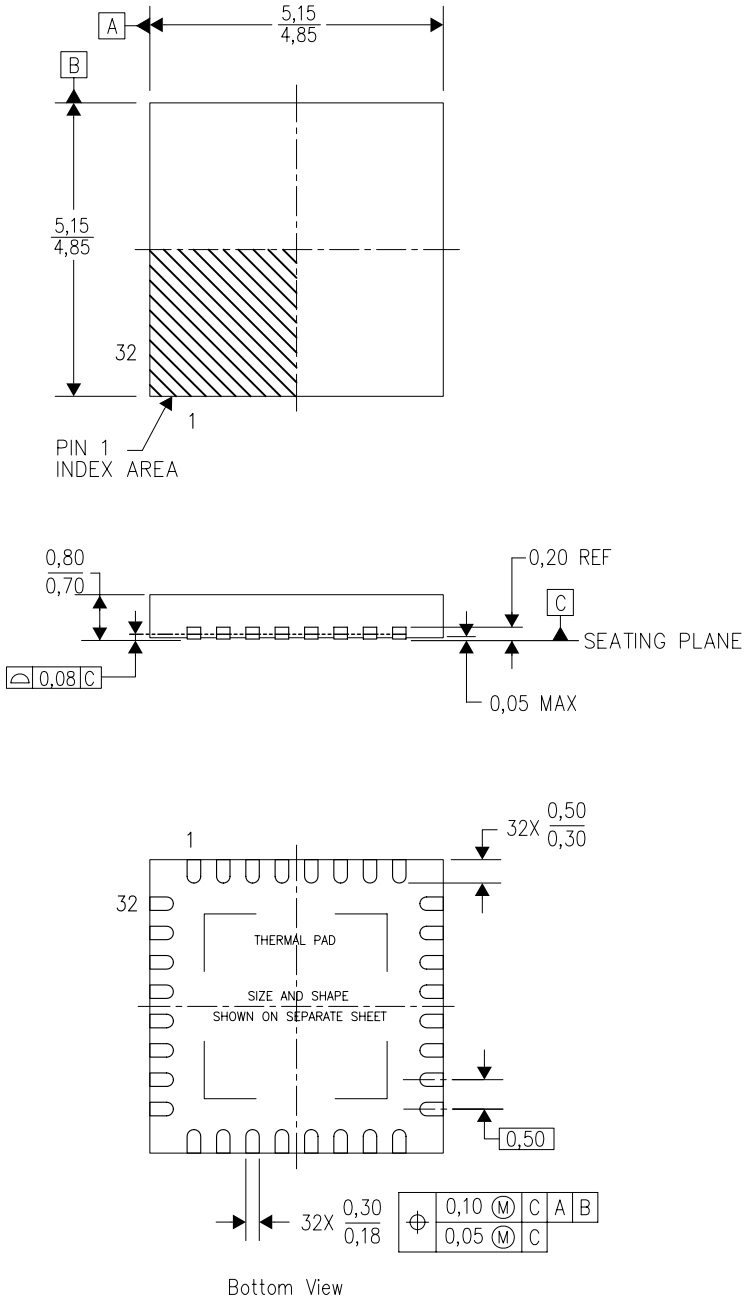


4206245/C 10/11

NOTES:
A. All linear dimensions are in millimeters. Dimensioning and tolerancing per ASME Y14.5-1994.
B. This drawing is subject to change without notice.
C. Quad Flatpack, No-Leads (QFN) package configuration.
D. The package thermal pad must be soldered to the board for thermal and mechanical performance.
E. See the additional figure in the Product Data Sheet for details regarding the exposed thermal pad features and dimensions.
F. Falls within JEDEC MO-220.

PLASTIC QUAD FLATPACK - NO LEAD

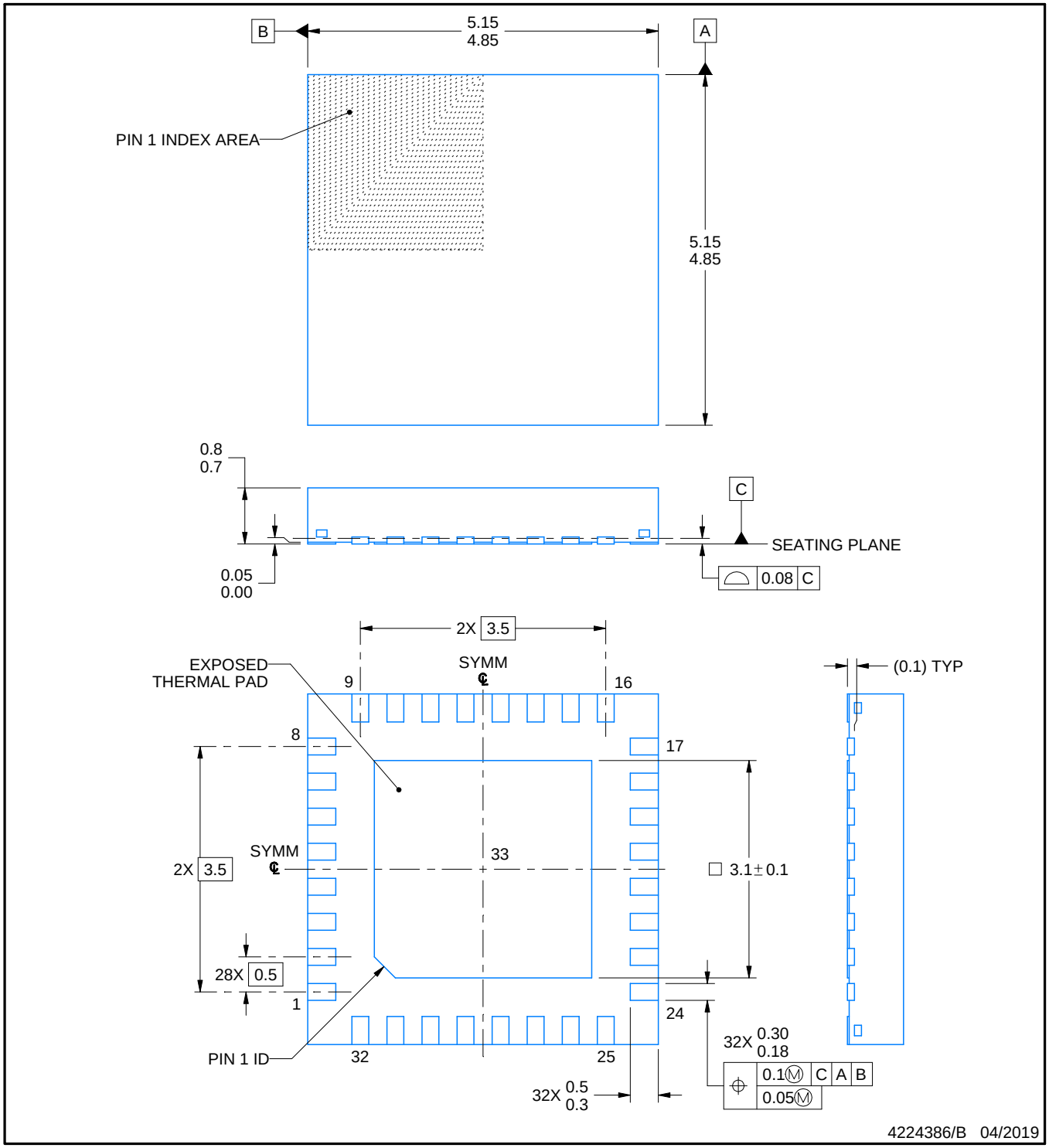


NOTES:

1. All linear dimensions are in millimeters. Any dimensions in parenthesis are for reference only. Dimensioning and tolerancing per ASME Y14.5M.
2. This drawing is subject to change without notice.
3. The package thermal pad must be soldered to the printed circuit board for thermal and mechanical performance.

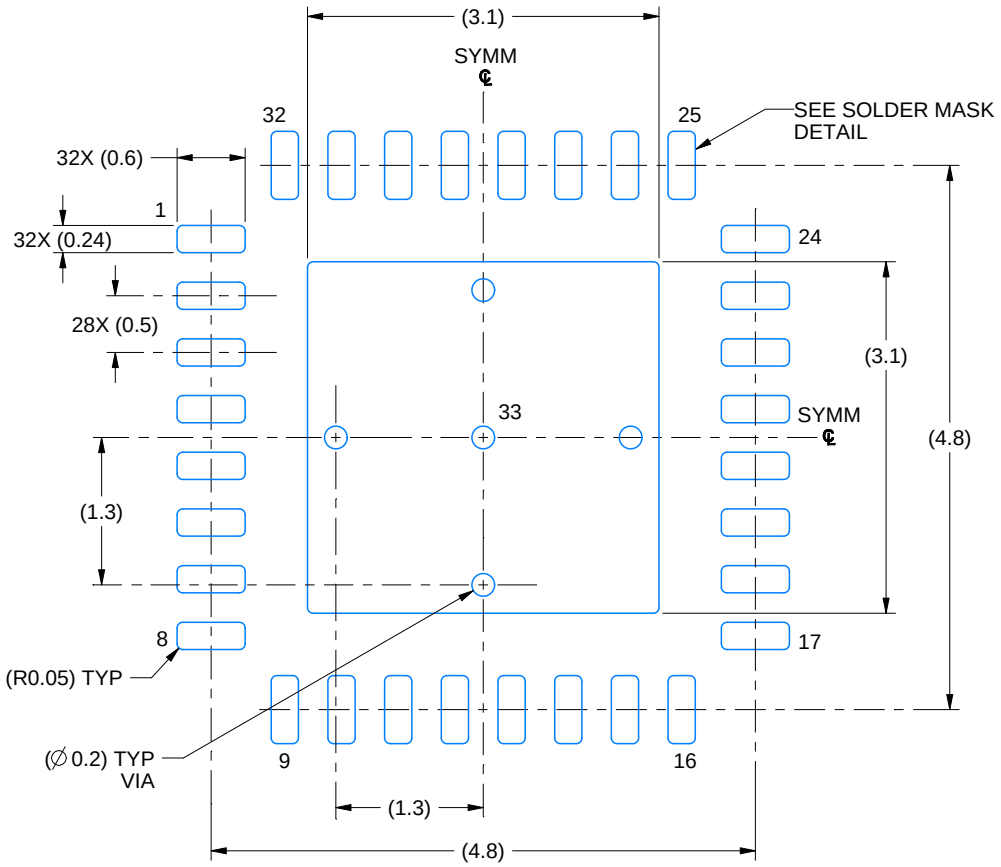


LAND PATTERN EXAMPLE
EXPOSED METAL SHOWN
SCALE: 15X

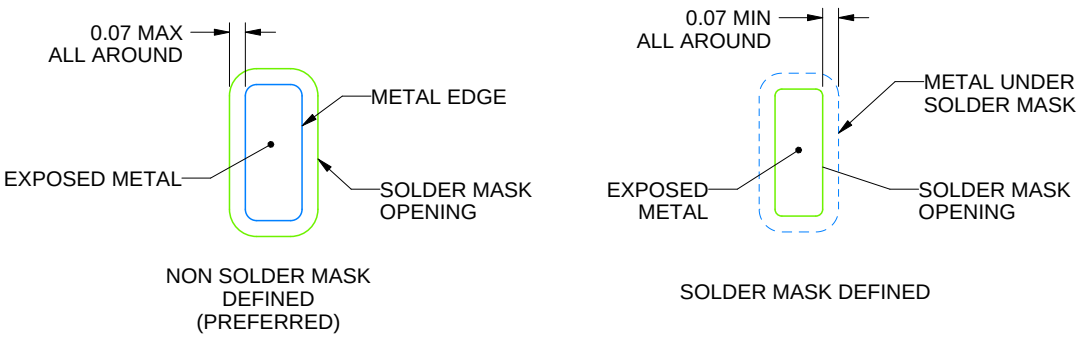


SOLDER MASK DETAILS

4224386/B 04/2019

NOTES: (continued)

4. This package is designed to be soldered to a thermal pad on the board. For more information, see Texas Instruments literature number SLUA271 (www.ti.com/lit/slua271).
5. Vias are optional depending on application, refer to device data sheet. If any vias are implemented, refer to their locations shown on this view. It is recommended that vias under paste be filled, plugged or tented.

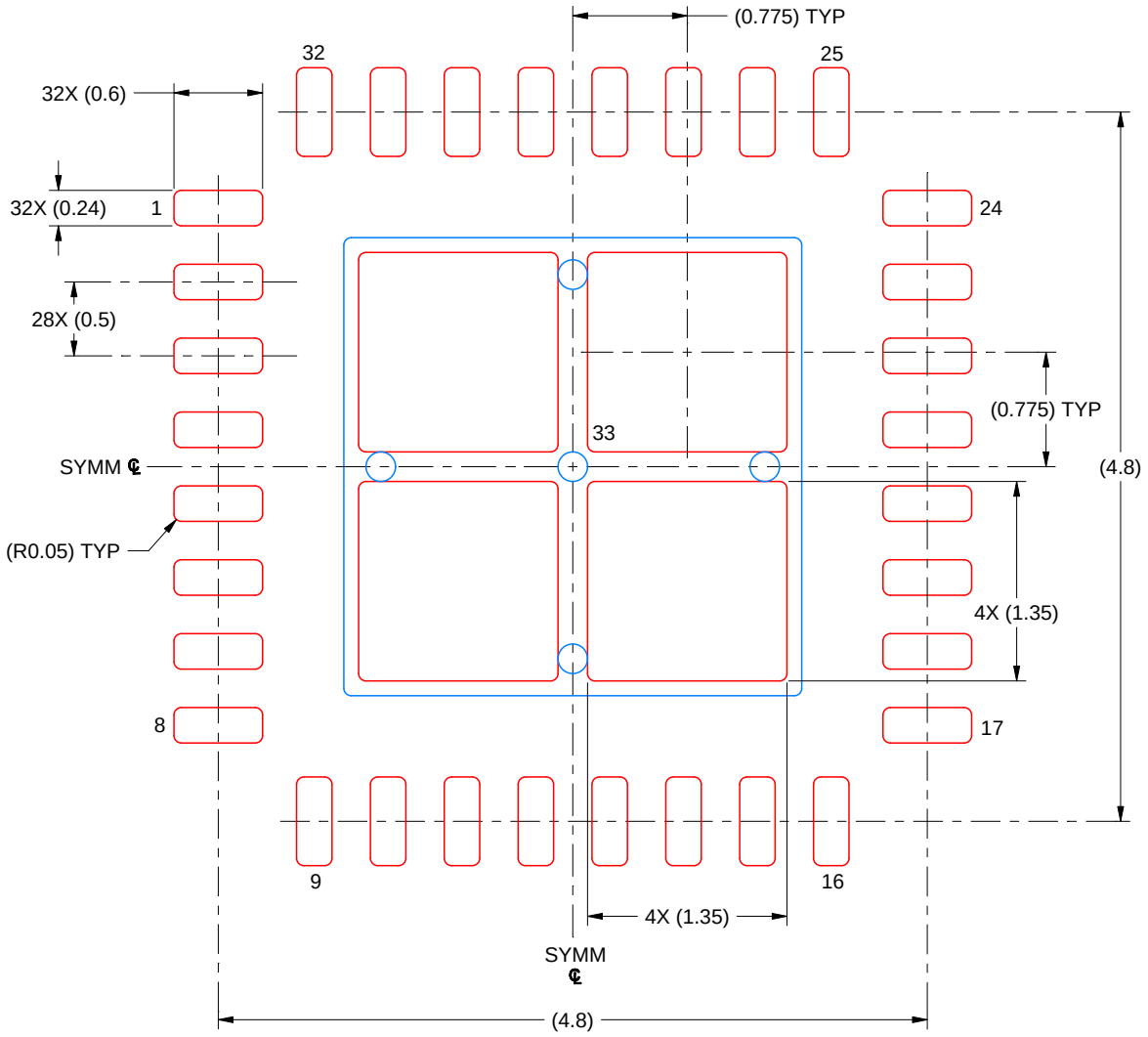


SOLDER PASTE EXAMPLE
BASED ON 0.125 MM THICK STENCIL
SCALE: 20X

EXPOSED PAD 33
76% PRINTED SOLDER COVERAGE BY AREA UNDER PACKAGE

4224386/B 04/2019

NOTES: (continued)

6. Laser cutting apertures with trapezoidal walls and rounded corners may offer better paste release. IPC-7525 may have alternate design recommendations.

# IMPORTANT NOTICE AND DISCLAIMER

TI PROVIDES TECHNICAL AND RELIABILITY DATA (INCLUDING DATASHEETS), DESIGN RESOURCES (INCLUDING REFERENCE DESIGNS), APPLICATION OR OTHER DESIGN ADVICE, WEB TOOLS, SAFETY INFORMATION, AND OTHER RESOURCES “AS IS” AND WITH ALL FAULTS, AND DISCLAIMS ALL WARRANTIES, EXPRESS AND IMPLIED, INCLUDING WITHOUT LIMITATION ANY IMPLIED WARRANTIES OF MERCHANTABILITY, FITNESS FOR A PARTICULAR PURPOSE OR NON-INFRINGEMENT OF THIRD PARTY INTELLECTUAL PROPERTY RIGHTS.

These resources are intended for skilled developers designing with TI products. You are solely responsible for (1) selecting the appropriate TI products for your application, (2) designing, validating and testing your application, and (3) ensuring your application meets applicable standards, and any other safety, security, regulatory or other requirements.

These resources are subject to change without notice. TI grants you permission to use these resources only for development of an application that uses the TI products described in the resource. Other reproduction and display of these resources is prohibited. No license is granted to any other TI intellectual property right or to any third party intellectual property right. TI disclaims responsibility for, and you fully indemnify TI and its representatives against any claims, damages, costs, losses, and liabilities arising out of your use of these resources.

TI’s products are provided subject to TI’s Terms of Sale, TI’s General Quality Guidelines, or other applicable terms available either on ti.com or provided in conjunction with such TI products. TI’s provision of these resources does not expand or otherwise alter TI’s applicable warranties or warranty disclaimers for TI products. Unless TI explicitly designates a product as custom or customer-specified, TI products are standard, catalog, general purpose devices.

TI objects to and rejects any additional or different terms you may propose.

Copyright © 2025, Texas Instruments Incorporated

Last updated 10/2025