LM57 Resistor-Programmable Temperature Switch and Analog Temperature Sensor

1 Features

- See LM57-Q1 Data Sheet for AEC-Q100 Grade 1/Grade 0/Grade 0 Extended (Qualified and Manufactured on an Automotive Grade Flow)
- Trip Temperature Set by External Resistors with Accuracy of ±1.7°C or ±2.3°C from −40°C to +150°C
- Resistor Tolerance Contributes Zero Error
- Push-Pull and Open-Drain Switch Outputs
- Wide Operating Temperature Range of −50°C to 150°C
- Very Linear Analog V_{TEMP} Temp Sensor Output with ±0.8°C or ±1.3°C Accuracy from −50°C to +150°C
- Short-Circuit Protected Analog and Digital Outputs
- Latching Function for Digital Outputs
- TRIP-TEST Pin Allows In-System Testing
- Low Power Minimizes Self-Heating to Under 0.02°C

2 Applications

- Factory Automation
- Industrial
- Automotive
- Down Hole
- Avionics
- Telecom Infrastructure

3 Description

The LM57 device is a precision, dual-output, temperature switch with analog temperature sensor output for wide temperature industrial applications. The trip temperature (T_{TRIP}) is selected from 256 possible values in the range of –40°C to 150°C. The V_{TEMP} is a class AB analog voltage output that is proportional to temperature with a programmable negative temperature coefficient (NTC). Two external 1% resistors set the T_{TRIP} and V_{TEMP} slope. The digital and analog outputs enable protection and monitoring of system thermal events.

Built-in thermal hysteresis (T_{HYST}) prevents the digital outputs from oscillating. The T_{OVER} and $\overline{T_{OVER}}$ digital outputs will assert when the die temperature exceeds T_{TRIP} and will de-assert when the temperature falls below a temperature equal to T_{TRIP} minus T_{HYST}.

T_{OVER} is active-high with a push-pull structure. $\overline{T_{OVER}}$ is active-low with an open-drain structure. Tying T_{OVER} to TRIP-TEST will latch the output after it trips. The output can be cleared by forcing TRIP-TEST low. Driving the TRIP-TEST high will assert the digital outputs. A processor can check the state of T_{OVER} or $\overline{T_{OVER}}$, confirming they changed to an active state. This allows for in situ verification that the comparator and output circuitry are functional after system assembly. When TRIP-TEST is high, the trip-level reference voltage appears at the V_{TEMP} pin. The system could then use this voltage to calculate the threshold of the LM57.

Device Information (1) (2)

PART NUMBER	PACKAGE	BODY SIZE (NOM)
LM57BISD	WSON (8)	2.50 mm × 2.50 mm
LM57FPW	TSSOP (8)	3.00 mm × 6.40 mm

(1) For all available packages, see the orderable addendum at the end of the data sheet.

(2) For device comparison see *Device Comparison Table* .

LM57 Overtemperature Alarm

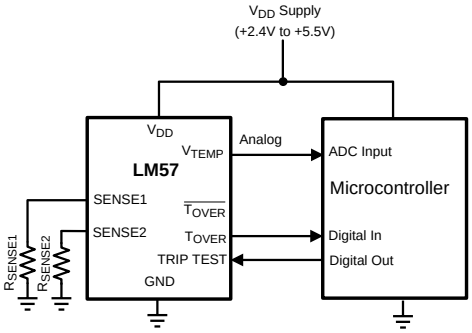

Temperature Transfer Function

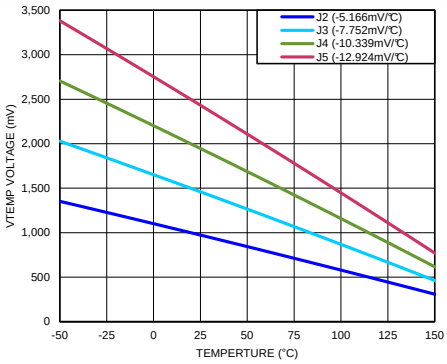

An IMPORTANT NOTICE at the end of this data sheet addresses availability, warranty, changes, use in safety-critical applications, intellectual property matters and other important disclaimers. PRODUCTION DATA.

Table of Contents

1 Features ... 1
2 Applications ... 1
3 Description ... 1
4 Revision History ... 2
5 Device Comparison Table ... 3
6 Pin Configuration and Functions ... 4
7 Specifications ... 5
7.1 Absolute Maximum Ratings ... 5
7.2 ESD Ratings ... 5
7.3 Recommended Operating Conditions ... 5
7.4 Thermal Information ... 6
7.5 Electrical Characteristics - Accuracy Characteristics – Trip Point Accuracy ... 7
7.6 Electrical Characteristics - Accuracy Characteristics – V_{TEMP} Analog Temperature Sensor Output Accuracy ... 7
7.7 Electrical Characteristics ... 8
7.8 Switching Characteristics ... 9
7.9 Typical Characteristics ... 10
8 Detailed Description ... 12
8.1 Overview ... 12
8.2 Functional Block Diagram ... 12
8.3 Feature Description ... 13
8.4 Device Functional Modes ... 23
9 Application and Implementation ... 26
9.1 Application Information ... 26
9.2 Typical Application ... 26
10 Power Supply Recommendations ... 28
11 Layout ... 28
11.1 Layout Guidelines ... 28
11.2 Layout Example ... 29
11.3 Temperature Considerations ... 30
12 Device and Documentation Support ... 31
12.1 Documentation Support ... 31
12.2 Community Resources ... 31
12.3 Trademarks ... 31
12.4 Electrostatic Discharge Caution ... 31
12.5 Glossary ... 31
13 Mechanical, Packaging, and Orderable Information ... 31

4 Revision History

NOTE: Page numbers for previous revisions may differ from page numbers in the current version.

Changes from Revision D (February 2013) to Revision E	Page
• Added *Pin Configuration and Functions* section, *ESD Ratings* table, *Feature Description* section, *Device Functional Modes*, *Application and Implementation* section, *Power Supply Recommendations* section, *Layout* section, *Device and Documentation Support* section, and *Mechanical, Packaging, and Orderable Information* section	1
• Added TSSOP Package option throughout data sheet	1

Changes from Revision C (February 2010) to Revision D	Page
• Changed layout of National Data Sheet to TI format	1

Copyright © 2009–2015, Texas Instruments Incorporated

5 Device Comparison Table

ORDER NUMBER	PACKAGE	GRADE (TEMP RANGE)	V_{TEMP} ACCURACY	TRIP POINT ACCURACY	HYSTERESIS
LM57BISD-5, LM57BISDX-5	WSON/SD/NGR /DFN (8)	Commercial (-50°C to 150°C)	±0.8°C	±1.5°C	5°C
LM57BISD-10, LM57BISDX-10	WSON/SD/NGR /DFN (8)	Commercial (-50°C to 150°C)	±0.8°C	±1.5°C	10°C
LM57CISD-5, LM57CISD-5	WSON/SD/NGR /DFN (8)	Commercial (-50°C to 150°C)	±1.3°C	±2.3°C	5°C
LM57CISD-10, LM57CISDX-10	WSON/SD/NGR /DFN (8)	Commercial (-50°C to 150°C)	±1.3°C	±2.3°C	10°C
LM57FPW, LM57FPWR	PW/TSSOP (8)	Commercial (-50°C to 150°C)	±1.3°C	±2.3°C	5°C
LM57TPW, LM57TPWR	PW/TSSOP (8)	Commercial (-50°C to 150°C)	±1.3°C	±2.3°C	10°C
LM57FSPWQ1, LM57FSPWRQ1 (1)	PW/TSSOP (8)	Automotive Grade 0 Extended (-50°C to 160°C)	±1.3°C	±2.3°C	5°C
LM57TSPWQ1, LM57TSPWRQ1 (1)	PW/TSSOP (8)	Automotive Grade 0 Extended (-50°C to 160°C)	±1.3°C	±2.3°C	10°C
LM57FEPWQ1, LM57FEPWRQ1 (1)	PW/TSSOP (8)	Automotive Grade 0 Standard (-50°C to 150°C)	±1.3°C	±2.3°C	5°C
LM57TEPWQ1, LM57TEPWRQ1 (1)	PW/TSSOP (8)	Automotive Grade 0 Standard (-50°C to 150°C)	±1.3°C	±2.3°C	10°C
LM57FQPWQ1, LM57FQPWRQ1 (1)	PW/TSSOP (8)	Automotive Grade 1 Standard (-50°C to 125°C)	±1.3°C	±2.3°C	5°C
LM57TQPWQ1, LM57TQPWRQ1 (1)	PW/TSSOP (8)	Automotive Grade 1 Standard (-50°C to 125°C)	±1.3°C	±2.3°C	10°C

(1) For Automotive grade device complete datasheet see LM57-Q1.

6 Pin Configuration and Functions

TSSOP/PW and WSON/SD/NGR/DFN Packages
8-Pin
Top View

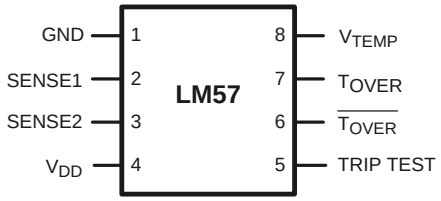

Pin Functions

PIN		TYPE	EQUIVALENT CIRCUIT	DESCRIPTION
NAME	NO.			
GND	1	Ground	—	Power supply ground
SENSE1	2	—	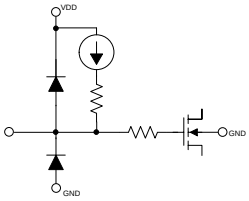	Trip-point resistor sense. One of two sense pins which selects the temperature at which T_{OVER} and $\overline{T_{OVER}}$ will assert.
SENSE2	3	—	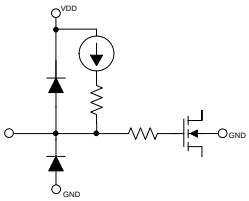	Trip-point resistor sense. One of two sense pins which selects the temperature at which T_{OVER} and $\overline{T_{OVER}}$ will assert.
V_{DD}	4	Power		Supply voltage
TRIP TEST	5	Digital Input	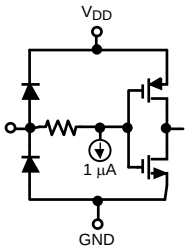	TRIP TEST pin. Active High input. If TRIP TEST = 0 (default), then the V_{TEMP} output has the analog temperature sensor output voltage. If TRIP TEST = 1, then T_{OVER} and $\overline{T_{OVER}}$ outputs are asserted and V_{TEMP} = V_{TRIP}, the temperature trip voltage. Tie this pin to ground if not used.
$\overline{T_{OVER}}$	6	Digital Output	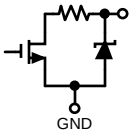	Overtemperature switch output Active low, open-drain (see *LM57 V_{TEMP} Voltage-to-Temperature Equations* regarding required pullup resistor.) Asserted when the measured temperature exceeds the Trip Point Temperature or if TRIP TEST = 1 This pin may be left open if not used.
T_{OVER}	7	Digital Output	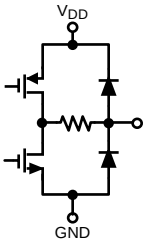	Overtemperature switch output Active high, push-pull Asserted when the measured temperature exceeds the trip point temperature or if TRIP TEST = 1 This pin may be left open if not used.

Copyright © 2009–2015, Texas Instruments Incorporated

Pin Functions (continued)

PIN		TYPE	EQUIVALENT CIRCUIT	DESCRIPTION
NAME	NO.			
V_{TEMP}	8	Analog Output	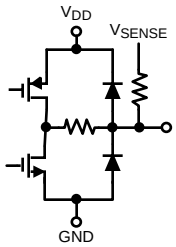	V_{TEMP} analog voltage output If TRIP TEST = 0, then $V_{TEMP} = V_{TS}$, temperature sensor output voltage If TRIP TEST = 1, then $V_{TEMP} = V_{TRIP}$, temperature trip voltage This pin may be left open if not used.
Thermal Pad (WSON package only)	—	—	—	Connected to GND

7 Specifications

7.1 Absolute Maximum Ratings

over operating free-air temperature range (unless otherwise noted) (1) (2)

	MIN	MAX	UNIT
Supply voltage	−0.3	6	V
Voltage at $\overline{T_{OVER}}$	−0.3	6	V
Voltage at T_{OVER} , V_{TEMP}, TRIP-TEST, SENSE1, and SENSE2	−0.3	(V_{DD} + 0.3 V)	V
Current at any pin		5	mA
Storage temperature	−65	150	°C

(1) Stresses beyond those listed under *Absolute Maximum Ratings* may cause permanent damage to the device. These are stress ratings only, which do not imply functional operation of the device at these or any other conditions beyond those indicated under *Recommended Operating Conditions*. Exposure to absolute-maximum-rated conditions for extended periods may affect device reliability.
(2) Soldering process must comply with Reflow Temperature Profile specifications. Refer to www.ti.com/packaging.

7.2 ESD Ratings

			VALUE	UNIT
LM57BISD and LM57CISD in WSON package				
$V_{(ESD)}$	Electrostatic discharge (1)	Human body model (HBM)	±5500	V
		Charged-device model (CDM)	±1250	
		Machine Model (MM)	±450	
LM57FPW and LM57TPW in TSSOP package				
$V_{(ESD)}$	Electrostatic discharge	Human body model (HBM), per ANSI/ESDA/JEDEC JS-001 (2)	±2000	V
		Charged-device model (CDM), per JEDEC specification JESD22-C101 (3)	±750	

(1) The Human Body Model (HBM) is a 100-pF capacitor charged to the specified voltage then discharged through a 1.5-kΩ resistor into each pin. The Machine Model (MM) is a 200 pF capacitor charged to the specified voltage then discharged directly into each pin. The Charged Device Model (CDM) is a specified circuit characterizing an ESD event that occurs when a device acquires charge through some triboelectric (frictional) or electrostatic induction processes and then abruptly touches a grounded object or surface.
(2) JEDEC document JEP155 states that 500-V HBM allows safe manufacturing with a standard ESD control process.
(3) JEDEC document JEP157 states that 250-V CDM allows safe manufacturing with a standard ESD control process.

7.3 Recommended Operating Conditions

		MIN	NOM	MAX	UNIT
Supply voltage		2.4		5.5	V
Free air temperature range ($T_{MIN} \le T_A \le T_{MAX}$)		−50		150	°C

Copyright © 2009–2015, Texas Instruments Incorporated

7.4 Thermal Information

THERMAL METRIC [1]		LM57		UNIT
		NGR (WSON/SD)	PW (TSSOP)	
		8 PINS	8 PINS	
$R_{\theta JA}$	Junction-to-ambient thermal resistance	71.3	183	°C/W
$R_{\theta JC(top)}$	Junction-to-case (top) thermal resistance	82.8	66	°C/W
$R_{\theta JB}$	Junction-to-board thermal resistance	43.4	111	°C/W
ψ_{JT}	Junction-to-top characterization parameter	2.2	8	°C/W
ψ_{JB}	Junction-to-board characterization parameter	43.7	110	°C/W
$R_{\theta JC(bot)}$	Junction-to-case (bottom) thermal resistance	11.9	—	°C/W

(1) For more information about traditional and new thermal metrics, see the *Semiconductor and IC Package Thermal Metrics* application report, SPRA953.

Copyright © 2009–2015, Texas Instruments Incorporated

7.5 Electrical Characteristics - Accuracy Characteristics – Trip Point Accuracy

PARAMETER	TEST CONDITIONS			LM57B			LM57C, LM57F or LM57T			UNIT
				MIN	TYP	MAX	MIN	TYP	MAX	
Trip Point Accuracy (Includes 1% set-resistor tolerance) (1)	J2	T_A = −41°C to 52°C	V_{DD} = 2.4 V to 5.5 V			±1.5			±2.3	°C
	J3	T_A = 52°C to 97°C	V_{DD} = 2.4 V to 5.5 V			±1.5			±2.3	°C
	J4	T_A = 97°C to 119°C	V_{DD} = 2.4 V to 5.5 V			±1.5			±2.3	°C
	J5	T_A = 119°C to free air temperature max	V_{DD} = 2.4 V to 5.5 V			±1.5			±2.3	°C

(1) Accuracy is defined as the error between the measured and reference output voltages, tabulated in the Conversion Table at the specified conditions of supply gain setting, voltage, and temperature (expressed in °C). Accuracy limits include line regulation within the specified conditions. Accuracy limits do not include load regulation; they assume no DC load.

7.6 Electrical Characteristics - Accuracy Characteristics – V_{TEMP} Analog Temperature Sensor Output Accuracy

These limits do not include DC load regulation. These stated accuracy limits are with reference to the values in Table 1.

PARAMETER	TEST CONDITIONS			LM57B			LM57C, LM57F or LM57T			UNIT
				MIN	TYP	MAX	MIN	TYP	MAX	
V_{TEMP} Accuracy (These stated accuracy limits are with reference to the values in Table 1, LM57 V_{TEMP} Temperature-to-Voltage.) (1)	J2	T_A = −50°C to free air temperature max	V_{DD} = 2.4 V to 5.5 V			±0.95			±1.3	°C
	J3	T_A = −50°C to free air temperature max	V_{DD} = 2.4 V to 5.5 V			±0.8			±1.3	°C
	J4	T_A = 20°C to 50°C	V_{DD} = 2.4 V to 5.5 V			±0.7			±1.3	°C
		T_A = 0°C to free air temperature max	V_{DD} = 2.7 V to 5.5 V			±0.7			±1.3	
		T_A = −50°C to 0°C	V_{DD} = 3.1 V to 5.5 V			±0.8			±1.3	
	J5	T_A = 60°C to free air temperature max	V_{DD} = 2.4 V to 5.5 V			±0.7			±1.3	°C
		T_A = 20°C to 50°C	V_{DD} = 2.9 V to 5.5 V			±0.7			±1.3	
		T_A = 0°C to free air temperature max	V_{DD} = 3.2 V to 5.5 V			±0.7			±1.3	
		T_A = −50°C to 0°C	V_{DD} = 4 V to 5.5 V			±0.8			±1.3	

(1) Accuracy is defined as the error between the measured and reference output voltages, tabulated in the Conversion Table at the specified conditions of supply gain setting, voltage, and temperature (expressed in °C). Accuracy limits include line regulation within the specified conditions. Accuracy limits do not include load regulation; they assume no DC load.

Copyright © 2009–2015, Texas Instruments Incorporated

7.7 Electrical Characteristics

Unless otherwise noted, these specifications apply for V_{DD} = 2.4 to 5.5 V. Limits apply over free air temperature range.

PARAMETER		TEST CONDITIONS	MIN (1)	TYP (2)	MAX (1)	UNIT
TEMPERATURE SENSOR						
	V_{TEMP} sensor gain	J2: −50°C to 52°C		−5.166		mV/°C
		J3: 52°C to 97°C		−7.752		
		J4: 97°C to 119°C		−10.339		
		J5: 119°C to 150°C		−12.924		
	Line regulation DC: supply-to-V_{TEMP} (3)	V_{DD} = 2.4 V to 5.5 V Temp = 90°C		0.18		mV
				58		µV/V
				−84		dB
	Load regulation: V_{TEMP} output (4)	Source ≤ 240 µA, (V_{DD} – V_{TEMP}) ≥ 200 mV; T_A = −50°C to 150°C			−1	mV
		Sink ≤ 300 µA, V_{TEMP} ≥ 360 mV; T_A = −50°C to 150°C			1	
		Source or sink = 100 µA; T_A = −50°C to 150°C		1		Ω
	Maximum Load capacitance: V_{TEMP} output	No output series resistor required; (See *V_{TEMP} Capacitive Loads*)			1100	pF
I_S	Supply current: quiescent (5)			24	28	µA
TRIP-TEST INPUT						
V_{IH}	Logic 1 threshold voltage		V_{DD} – 0.5			V
V_{IL}	Logic 0 threshold voltage				0.5	V
I_{IH}	Logic 1 input current			1.4	3	µA
I_{IL}	Logic 0 input leakage current (6)	T_A = −50°C to 150°C		0.001	1	µA
T_{OVER} (PUSH-PULL, ACTIVE-HIGH) OUTPUT						
V_{OH}	Logic 1 push-pull output voltage	Source ≤ 600 µA	V_{DD} – 0.2			V
		Source ≤ 1.2 mA	V_{DD} – 0.45			
V_{OL}	Logic 0 output voltage	Sink ≤ 600 µA			0.2	V
		Sink ≤ 1.2 mA			0.45	
$\overline{T_{OVER}}$ (OPEN-DRAIN, ACTIVE-LOW) OUTPUT						
V_{OL}	Logic 0 output voltage	Sink ≤ 600 µA			0.2	V
		Sink ≤1.2 mA			0.45	
I_{OH}	Logic 1 output leakage current (6)	Temperature = 30°C;		0.001	1	µA

(1) Limits are specified to TI's average outgoing quality level (AOQL).
(2) Typicals are at T_J = T_A = 25°C and represent most likely parametric norm.
(3) Line regulation (DC) is calculated by subtracting the output voltage at the highest supply voltage from the output voltage at the lowest supply voltage. The typical DC line regulation specification does not include the output voltage shift discussed in *V_{TEMP} Voltage Shift* .
(4) Source currents are flowing out of the LM57. Sink currents are flowing into the LM57. Load Regulation is calculated by measuring V_{TEMP} at 0 µA and subtracting the value with the conditions specified.
(5) Supply current refers to the quiescent current of the LM57 only and does not include any load current
(6) This current is leakage current only and is therefore highest at high temperatures. Prototype test indicate that the leakage is well below 1 µA over the full temperature range. This 1 µA specification reflects the limitations of measuring leakage at room temperature. For this reason only, the leakage current is not specified at a lower value.

Copyright © 2009–2015, Texas Instruments Incorporated

Electrical Characteristics (continued)

Unless otherwise noted, these specifications apply for V_{DD} = 2.4 to 5.5 V. Limits apply over free air temperature range.

PARAMETER		TEST CONDITIONS	MIN (1)	TYP (2)	MAX (1)	UNIT
HYSTERESIS						
T_{HYST}	Hysteresis temperature	5°C hysteresis option (for all LM57F or LM57-5)	4.7	5	5.4	°C
		10°C hysteresis option (for all LM57T or LM57-10)	9.6	10	10.6	°C

7.8 Switching Characteristics

Unless otherwise noted, these specifications apply for V_{DD} = 2.4 to 5.5 V over the free air temperature range.

PARAMETER		TEST CONDITIONS	MIN	TYP	MAX	UNIT
t_{EN}	Maximum time from power on to digital output enabled			1.5	2.9	ms
t_{VTEMP}	Maximum time from power on to analog temperature (V_{TEMP}) valid			1.5	2.9	ms

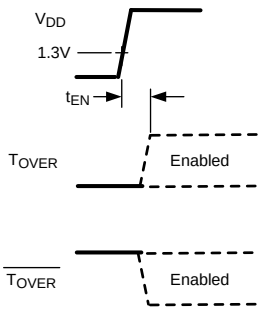

Figure 1. Definition of t_{EN}

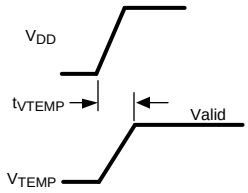

Figure 2. Definition of t_{VTEMP}

7.9 Typical Characteristics

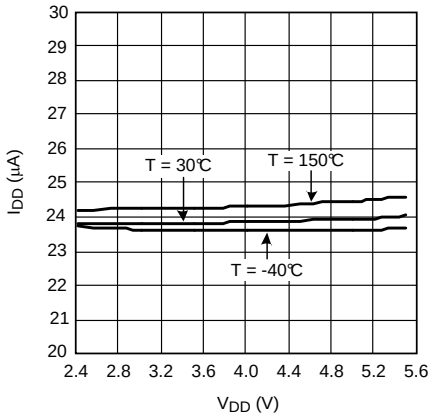

Figure 3. Supply Current vs Supply Voltage

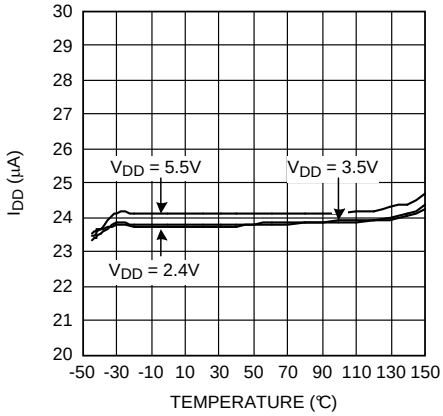

Figure 4. Supply Current vs Temperature

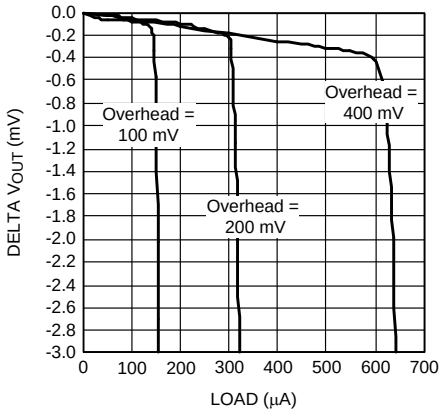

Figure 5. Load Regulation: Change In V_{TEMP} vs Source Current Overhead Is Vdd-Vtemp

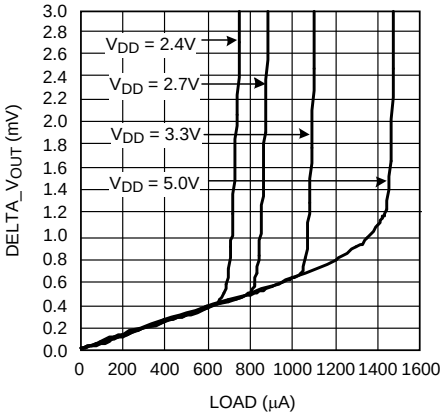

Figure 6. Load Regulation: Change In V_{TEMP} vs Sink Current

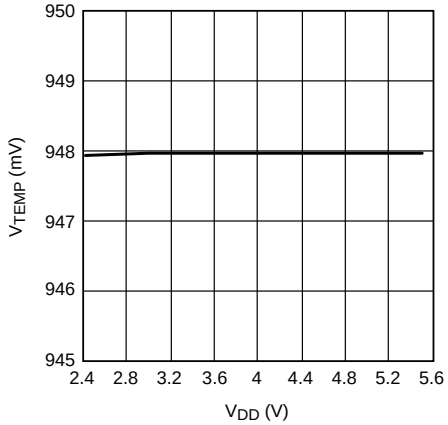

Figure 7. Line Regulation: V_{TEMP} vs Supply Voltage

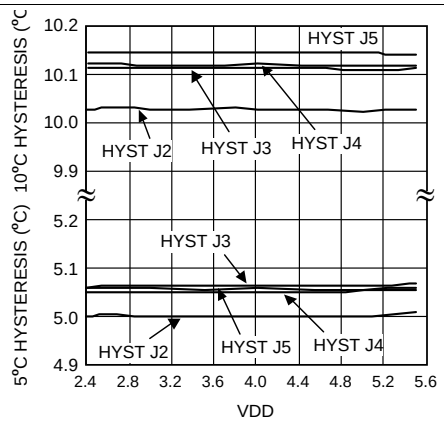

Figure 8. Line Regulation: Hysteresis vs Supply Voltage 30°C

Copyright © 2009–2015, Texas Instruments Incorporated

Typical Characteristics (continued)

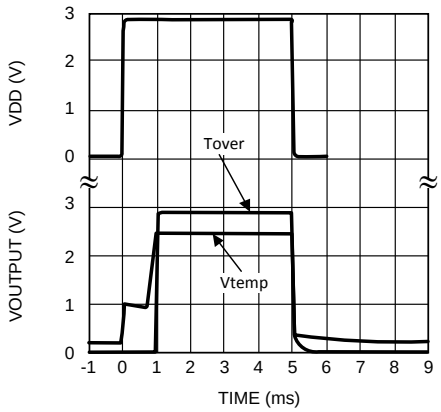

Figure 9. Start-Up Response

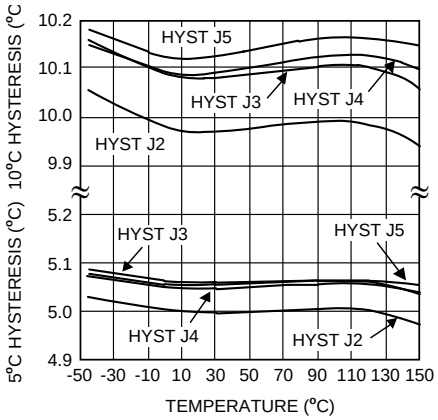

Figure 10. Hysteresis vs Temperature

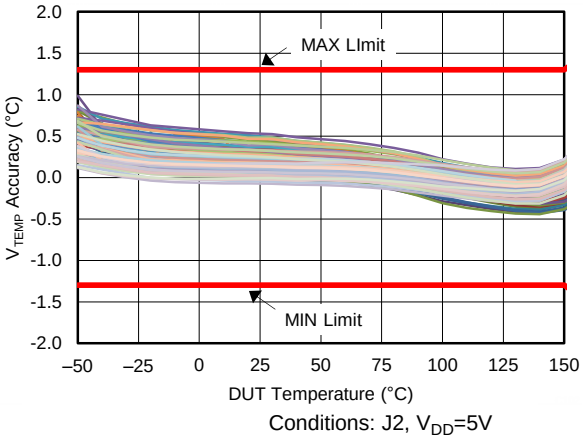

Figure 11. J2 Accuracy Specification Over Temperature

8 Detailed Description

8.1 Overview

The LM57 is a precision, dual-output, temperature switch with analog temperature sensor output. The trip temperature (T_{TRIP}) is selected from 256 possible values by using two external 1% resistors. The V_{TEMP} class AB analog output provides a voltage that is proportional to temperature. The LM57 includes an internal reference DAC, analog temperature sensor and analog comparator. The reference DAC is connected to one of the comparator inputs. The reference DAC output voltage (V_{TRIP}) is controlled by the value of resistance applied to the SENSE pins. The resistance value sets one of 16 "logic" levels at the SENSE pins. These "logic" levels are then decoded and applied to the DAC input, thus the actual resistance tolerance does not directly affect the threshold level accuracy. The result of the reference DAC voltage and the temperature sensor output comparison is provided on two output pins $\overline{T_{OVER}}$ and T_{OVER}.

The V_{TEMP} output has a programmable gain. The output gain has 4 possible settings as described in Figure 12. The gain setting is dependent on the trip point selected by resistance applied to the SENSE pins.

Built-in temperature hysteresis (T_{HYST}) prevents the digital outputs from oscillating. The T_{OVER} and $\overline{T_{OVER}}$ will activate when the die temperature exceeds T_{TRIP} and will release when the temperature falls below a temperature equal to T_{TRIP} minus T_{HYST}. T_{OVER} is active-high with a push-pull structure. $\overline{T_{OVER}}$, is active-low with an open-drain structure. There are two different hysteresis options available that are factory preset. The preset hysteresis can be selected by purchasing the proper order number as described in *Device Comparison Table* .

Driving the TRIP-TEST high will activate the digital outputs. A processor can check the logic level of the T_{OVER} or $\overline{T_{OVER}}$, confirming that they changed to their active state. This allows for system production testing verification that the comparator and output circuitry are functional after system assembly. When the TRIP-TEST pin is high, the trip-level reference voltage appears at the V_{TEMP} pin. Tying T_{OVER} to TRIP-TEST will latch the output after it trips. It can be cleared by forcing TRIP-TEST low or powering off the LM57.

8.2 Functional Block Diagram

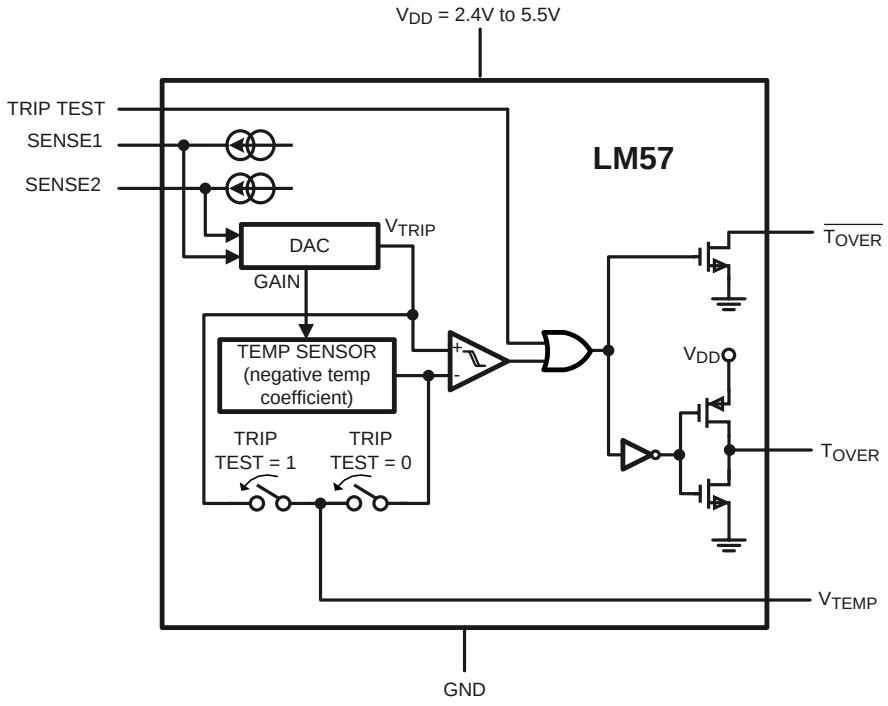

Copyright © 2009–2015, Texas Instruments Incorporated

8.3 Feature Description

8.3.1 LM57 V_{TEMP} Temperature-to-Voltage Transfer Function

The value of the R_{SENSE} resistors select a trip point and a corresponding V_{TEMP} gain (J2, J3, J4, or J5).The trip point range associated with a given gain is shown in bold green in Table 1. The V_{TEMP} gain is selected by the R_{SENSE} resistors. V_{TEMP} is valid over the entire temperature range. The V_{TEMP} gain is selected by the R_{SENSE} resistors. V_{TEMP} is valid over the entire temperature range.

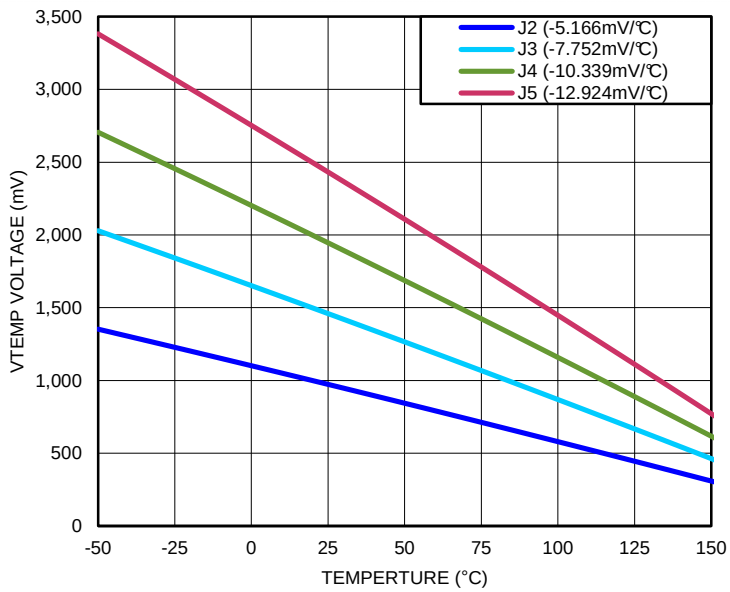

Figure 12. Temperature Transfer Characteristics

Table 1. LM57 V_{TEMP} Temperature to Voltage (1)

Temperature (°C)	V_{TEMP} VOLTAGE (mV)			
	J2 (-5.166 mV/°C)	J3 (–7.752 mV/°C)	J4 (–10.339 mV/°C)	J5 (–12.924 mV/°C)
–50	1352.56	2028.80	2705.20	3381.40
–49	1347.60	2021.35	2695.26	3368.98
–48	1342.64	2013.90	2685.32	3356.55
–47	1337.67	2006.44	2675.38	3344.12
–46	1332.70	1998.98	2665.43	3331.68
–45	1327.73	1991.52	2655.47	3319.23
–44	1322.76	1984.05	2645.51	3306.78
–43	1317.78	1976.58	2635.54	3294.32
–42	1312.81	1969.11	2625.57	3281.85
–41	**1307.82**	1961.63	2615.60	3269.38
–40	**1302.84**	1954.15	2605.62	3256.90
–39	**1297.86**	1946.66	2595.63	3244.41
–38	**1292.87**	1939.17	2585.64	3231.92
–37	**1287.88**	1931.68	2575.64	3219.42
–36	**1282.88**	1924.18	2565.64	3206.92
–35	**1277.89**	1916.68	2555.63	3194.41
–34	**1272.89**	1909.17	2545.62	3181.89

(1) The R_{SENSE} resistors select a trip point and a corresponding V_{TEMP} gain (J2, J3, J4, or J5). The trip point range associated with a given gain is shown in bold green on this table. V_{TEMP} is valid over the entire temperature range.

Copyright © 2009–2015, Texas Instruments Incorporated

Feature Description (continued)

Table 1. LM57 V_{TEMP} Temperature to Voltage [1] (continued)

Temperature (°C)	V_{TEMP} VOLTAGE (mV)			
	J2 (-5.166 mV/°C)	J3 (–7.752 mV/°C)	J4 (–10.339 mV/°C)	J5 (–12.924 mV/°C)
–33	**1267.88**	1901.66	2535.60	3169.37
–32	**1262.88**	1894.15	2525.58	3156.84
–31	**1257.87**	1886.63	2515.56	3144.30
–30	**1252.86**	1879.11	2505.52	3131.76
–29	**1247.85**	1871.59	2495.49	3119.21
–28	**1242.84**	1864.06	2485.44	3106.66
–27	**1237.82**	1856.53	2475.40	3094.10
–26	**1232.80**	1848.99	2465.34	3081.53
–25	**1227.78**	1841.45	2455.29	3068.96
–24	**1222.75**	1833.91	2445.23	3056.38
–23	**1217.73**	1826.36	2435.16	3043.79
–22	**1212.70**	1818.81	2425.09	3031.20
–21	**1207.67**	1811.26	2415.01	3018.60
–20	**1202.63**	1803.70	2404.93	3006.00
–19	**1197.59**	1796.13	2394.84	2993.38
–18	**1192.55**	1788.57	2384.74	2980.77
–17	**1187.51**	1781.00	2374.65	2968.14
–16	**1182.46**	1773.42	2364.54	2955.51
–15	**1177.42**	1765.85	2354.44	2942.87
–14	**1172.37**	1758.26	2344.32	2930.23
–13	**1167.31**	1750.68	2334.20	2917.58
–12	**1162.26**	1743.09	2324.08	2904.93
–11	**1157.20**	1735.50	2313.95	2892.26
–10	**1152.14**	1727.90	2303.82	2879.60
–9	**1147.07**	1720.30	2293.68	2866.92
–8	**1142.01**	1712.69	2283.54	2854.24
–7	**1136.94**	1705.09	2273.39	2841.55
–6	**1131.87**	1697.47	2263.24	2828.86
–5	**1126.79**	1689.86	2253.08	2816.16
–4	**1121.72**	1682.24	2242.91	2803.45
–3	**1116.64**	1674.61	2232.74	2790.74
–2	**1111.56**	1666.99	2222.57	2778.02
–1	**1106.47**	1659.35	2212.39	2765.30
0	**1101.39**	1651.72	2202.21	2752.57
1	**1096.30**	1644.08	2192.02	2739.83
2	**1091.20**	1636.44	2181.82	2727.08
3	**1086.11**	1628.79	2171.62	2714.33
4	**1081.01**	1621.14	2161.42	2701.58
5	**1075.91**	1613.48	2151.21	2688.82
6	**1070.81**	1605.83	2141.00	2676.05
7	**1065.71**	1598.16	2130.78	2663.27
8	**1060.60**	1590.50	2120.55	2650.49
9	**1055.49**	1582.83	2110.32	2637.70
10	**1050.38**	1575.15	2100.09	2624.91
11	**1045.26**	1567.48	2089.85	2612.10

Copyright © 2009–2015, Texas Instruments Incorporated

Feature Description (continued)

Table 1. LM57 V_{TEMP} Temperature to Voltage [1] (continued)

Temperature (°C)	V_{TEMP} VOLTAGE (mV)			
	J2 (-5.166 mV/°C)	J3 (–7.752 mV/°C)	J4 (–10.339 mV/°C)	J5 (–12.924 mV/°C)
12	**1040.14**	1559.80	2079.60	2599.30
13	**1035.02**	1552.11	2069.35	2586.48
14	**1029.90**	1544.42	2059.10	2573.66
15	**1024.77**	1536.73	2048.84	2560.84
16	**1019.65**	1529.03	2038.57	2548.01
17	**1014.51**	1521.33	2028.30	2535.17
18	**1009.38**	1513.63	2018.03	2522.32
19	**1004.25**	1505.92	2007.75	2509.47
20	**999.11**	1498.21	1997.46	2496.61
21	**993.97**	1490.49	1987.17	2483.75
22	**988.82**	1482.77	1976.88	2470.88
23	**983.68**	1475.05	1966.58	2458.00
24	**978.53**	1467.32	1956.27	2445.12
25	**973.38**	1459.59	1945.96	2432.23
26	**968.22**	1451.86	1935.64	2419.34
27	**963.07**	1444.12	1925.32	2406.43
28	**957.91**	1436.38	1915.00	2393.53
29	**952.74**	1428.63	1904.67	2380.61
30	**947.58**	1420.88	1894.33	2367.69
31	**942.41**	1413.13	1883.99	2354.76
32	**937.24**	1405.37	1873.64	2341.83
33	**932.07**	1397.61	1863.29	2328.89
34	**926.90**	1389.84	1852.94	2315.94
35	**921.72**	1382.07	1842.57	2302.99
36	**916.54**	1374.30	1832.21	2290.03
37	**911.36**	1366.52	1821.84	2277.07
38	**906.17**	1358.74	1811.46	2264.10
39	**900.98**	1350.96	1801.08	2251.12
40	**895.79**	1343.17	1790.69	2238.14
41	**890.60**	1335.38	1780.30	2225.15
42	**885.41**	1327.58	1769.90	2212.15
43	**880.21**	1319.78	1759.50	2199.15
44	**875.01**	1311.98	1749.09	2186.14
45	**869.81**	1304.17	1738.68	2173.12
46	**864.60**	1296.36	1728.26	2160.10
47	**859.39**	1288.54	1717.84	2147.07
48	**854.18**	1280.72	1707.41	2134.04
49	**848.97**	1272.90	1696.98	2121.00
50	**843.75**	1265.07	1686.54	2107.95
51	**838.53**	1257.24	1676.10	2094.90
52	**833.31**	1249.41	1665.65	2081.84
53	828.09	**1241.57**	1655.20	2068.77
54	822.86	**1233.73**	1644.74	2055.70
55	817.63	**1225.88**	1634.28	2042.62
56	812.40	**1218.03**	1623.81	2029.54

Copyright © 2009–2015, Texas Instruments Incorporated

Feature Description (continued)

Table 1. LM57 V_{TEMP} Temperature to Voltage [1] (continued)

Temperature (°C)	V_{TEMP} VOLTAGE (mV)			
	J2 (-5.166 mV/°C)	J3 (–7.752 mV/°C)	J4 (–10.339 mV/°C)	J5 (–12.924 mV/°C)
57	807.17	**1210.18**	1613.34	2016.44
58	801.93	**1202.32**	1602.86	2003.35
59	796.69	**1194.46**	1592.38	1990.24
60	791.45	**1186.60**	1581.89	1977.13
61	786.20	**1178.73**	1571.40	1964.02
62	780.96	**1170.86**	1560.90	1950.89
63	775.71	**1162.98**	1550.40	1937.76
64	770.46	**1155.10**	1539.89	1924.63
65	765.20	**1147.22**	1529.37	1911.49
66	759.94	**1139.33**	1518.86	1898.34
67	754.68	**1131.44**	1508.33	1885.19
68	749.42	**1123.54**	1497.80	1872.02
69	744.16	**1115.64**	1487.27	1858.86
70	738.89	**1107.74**	1476.73	1845.68
71	733.62	**1099.83**	1466.19	1832.50
72	728.35	**1091.92**	1455.64	1819.32
73	723.07	**1084.01**	1445.08	1806.13
74	717.79	**1076.09**	1434.53	1792.93
75	712.51	**1068.17**	1423.96	1779.72
76	707.23	**1060.24**	1413.39	1766.51
77	701.94	**1052.31**	1402.82	1753.30
78	696.65	**1044.38**	1392.24	1740.07
79	691.36	**1036.44**	1381.65	1726.84
80	686.07	**1028.50**	1371.07	1713.61
81	680.77	**1020.55**	1360.47	1700.36
82	675.48	**1012.60**	1349.87	1687.11
83	670.17	**1004.65**	1339.27	1673.86
84	664.87	**996.69**	1328.66	1660.60
85	659.56	**988.73**	1318.04	1647.33
86	654.25	**980.77**	1307.42	1634.05
87	648.94	**972.80**	1296.80	1620.77
88	643.63	**964.83**	1286.17	1607.49
89	638.31	**956.85**	1275.53	1594.19
90	632.99	**948.87**	1264.89	1580.89
91	627.67	**940.89**	1254.25	1567.59
92	622.35	**932.90**	1243.60	1554.28
93	617.02	**924.91**	1232.94	1540.96
94	611.69	**916.92**	1222.28	1527.63
95	606.36	**908.92**	1211.61	1514.30
96	601.02	**900.91**	1200.94	1500.97
97	595.69	892.91	**1190.27**	1487.62
98	590.34	884.90	**1179.59**	1474.27
99	585.00	876.88	**1168.90**	1460.92
100	579.66	868.87	**1158.21**	1447.55
101	574.31	860.84	**1147.52**	1434.18

Copyright © 2009–2015, Texas Instruments Incorporated

Feature Description (continued)

Table 1. LM57 V_{TEMP} Temperature to Voltage (1) (continued)

Temperature (°C)	V_{TEMP} VOLTAGE (mV)			
	J2 (-5.166 mV/°C)	J3 (–7.752 mV/°C)	J4 (–10.339 mV/°C)	J5 (–12.924 mV/°C)
102	568.96	852.82	**1136.81**	1420.81
103	563.61	844.79	**1126.11**	1407.43
104	558.25	836.76	**1115.40**	1394.04
105	552.89	828.72	**1104.68**	1380.65
106	547.53	820.68	**1093.96**	1367.24
107	542.17	812.63	**1083.23**	1353.84
108	536.80	804.59	**1072.50**	1340.42
109	531.43	796.53	**1061.77**	1327.01
110	526.06	788.48	**1051.02**	1313.58
111	520.69	780.42	**1040.28**	1300.15
112	515.31	772.35	**1029.53**	1286.71
113	509.93	764.29	**1018.77**	1273.26
114	504.55	756.21	**1008.01**	1259.81
115	499.17	748.14	**997.24**	1246.36
116	493.78	740.06	**986.47**	1232.89
117	488.39	731.98	**975.69**	1219.42
118	483.00	723.89	**964.91**	1205.95
119	477.61	715.80	**954.12**	1192.46
120	472.21	707.70	943.33	**1178.98**
121	466.81	699.61	932.53	**1165.48**
122	461.41	691.50	921.73	**1151.98**
123	456.00	683.40	910.92	**1138.47**
124	450.60	675.29	900.11	**1124.96**
125	445.19	667.18	889.29	**1111.44**
126	439.78	659.06	878.47	**1097.91**
127	434.36	650.94	867.64	**1084.38**
128	428.94	642.81	856.81	**1070.84**
129	423.52	634.68	845.97	**1057.29**
130	418.10	626.55	835.13	**1043.74**
131	412.67	618.41	824.28	**1030.18**
132	407.25	610.27	813.43	**1016.62**
133	401.82	602.13	802.57	**1003.05**
134	396.38	593.98	791.71	**989.47**
135	390.95	585.83	780.84	**975.89**
136	385.51	577.67	769.97	**962.30**
137	380.07	569.51	759.09	**948.70**
138	374.63	561.35	748.20	**935.10**
139	369.18	553.18	737.32	**921.49**
140	363.73	545.01	726.42	**907.87**
141	358.28	536.84	715.52	**894.25**
142	352.83	528.66	704.62	**880.62**
143	347.37	520.48	693.71	**866.99**
144	341.91	512.29	682.80	**853.35**
145	336.45	504.10	671.88	**839.70**
146	330.99	495.91	660.95	**826.05**

Copyright © 2009–2015, Texas Instruments Incorporated

Feature Description (continued)

Table 1. LM57 V_{TEMP} Temperature to Voltage [1] (continued)

Temperature (°C)	V_{TEMP} VOLTAGE (mV)			
	J2 (-5.166 mV/°C)	J3 (–7.752 mV/°C)	J4 (–10.339 mV/°C)	J5 (–12.924 mV/°C)
147	325.52	487.71	650.03	**812.39**
148	320.05	479.51	639.09	**798.73**
149	314.58	471.30	628.15	**785.05**
150	309.10	463.09	617.21	**771.38**

Copyright © 2009–2015, Texas Instruments Incorporated

8.3.1.1 LM57 V_{TEMP} Voltage-to-Temperature Equations

$V_{TEMP} = a\,(T-30)^2 + b\,(T-30) + c$

where

- V_{TEMP} is in mV and T is in °C (1)

$$T = \frac{-b - \sqrt{b^2 - 4a(c - V_{TEMP})}}{2a} + 30°C$$

where

- T is in °C and V_{TEMP} is in mV (2)

Table 2. LM57 V_{TEMP} Voltage-to-Temperature Equations Coefficients

Trip-Point Region	LM57 Trip Point Range	a	b	c
J2	−41°C to 52°C	– 0.00129	− 5.166	947.6
J3	52°C to 97°C	– 0.00191	− 7.752	1420.9
J4	97°C to 119°C	– 0.00253	− 10.339	1894.3
J5	119°C to 150°C	– 0.00316	− 12.924	2367.7

8.3.2 R_{SENSE}

The LM57 uses the voltage at the two SENSE pins to set the trip point for the temperature switch. It is possible to drive the two SENSE pins with a voltage equal to the value generated by the resistor and the internal current-source and have the same switch point. Thus one can use an external DAC to drive each SENSE pin, allowing for the temperature trip point to be set dynamically by the system processor. Table 3 shows the R_{SENSE} value and its corresponding generated SENSE pin voltage (the center value).

Table 3. R_{SENSE} Values (kΩ) vs SENSE Pin Voltage (mV)

R_{SENSE} (kΩ)	SENSE Pin Voltage (mV)
	Center Value
976	1875
825	1585
698	1341
590	1134
499	959
412	792
340	653
280	538
226	434
178	342
140	269
105	202
75	146
46.4	87
22.6	43
0.01	0

Copyright © 2009–2015, Texas Instruments Incorporated

8.3.3 Resistor Selection

Table 4. Trip Point (°C) vs Sense Resistor (R_{SENSE}) Values (Ω)

		R_{SENSE2}												
		J2 (1)				J3 (1)			J4 (1)		J5 (1)			
		976 kΩ	825 kΩ	698 kΩ	590 kΩ	499 kΩ	412 kΩ	340 kΩ	280 kΩ	226 kΩ	178 kΩ	140 kΩ	105 kΩ	75 kΩ
R_{SENSE1}	976 kΩ	–40.68	–16.26	7.33	30.38	52.73	67.77	82.74	97.47	108.61	119.62	128.46	137.28	146.08
	825 kΩ	–39.13	–14.76	8.79	31.81	53.68	68.71	83.67	98.17	109.30	120.18	129.01	137.83	146.62
	698 kΩ	–37.57	–13.27	10.24	33.24	54.62	69.65	84.60	98.86	110.00	120.73	129.56	138.38	147.16
	590 kΩ	–36.03	–11.78	11.70	34.67	55.56	70.59	85.53	99.56	110.70	121.28	130.12	138.93	147.71
	499 kΩ	–34.49	–10.29	13.15	36.10	56.50	71.52	86.46	100.25	111.39	121.84	130.67	139.49	148.25
	412 kΩ	–32.95	–8.81	14.60	37.53	57.44	72.46	87.40	100.95	112.09	122.39	131.22	140.04	148.80
	340 kΩ	–31.41	–7.32	16.05	38.95	58.39	73.40	88.33	101.64	112.79	122.94	131.77	140.59	149.34
	280 kΩ	–29.88	–5.83	17.49	40.38	59.33	74.33	89.26	102.34	113.48	123.50	132.32	141.14	149.88
	226 kΩ	–28.34	–4.35	18.93	41.81	60.27	75.27	90.19	103.03	114.18	124.05	132.87	141.69	150.43
	178 kΩ	–26.83	–2.88	20.36	43.23	61.21	76.20	91.12	103.73	114.87	124.60	133.43	142.24	
	140 kΩ	–25.32	–1.42	21.79	44.65	62.15	77.14	92.05	104.42	115.57	125.15	133.98	142.79	
	105 kΩ	–23.80	0.04	23.22	46.07	63.08	78.07	92.99	105.11	116.26	125.71	134.53	143.34	
	75 kΩ	–22.29	1.50	24.65	47.50	64.02	79.01	93.92	105.81	116.95	126.26	135.08	143.89	
	46.4 kΩ	–20.77	2.96	26.08	48.92	64.96	79.94	94.84	106.50	117.65	126.81	135.63	144.44	
	22.6 kΩ	–19.26	4.42	27.51	50.33	65.90	80.87	95.77	107.19	118.34	127.36	136.18	144.99	
	0.01 kΩ	–17.75	5.88	28.94	51.75	66.84	81.81	96.70	107.89	119.04	127.91	136.73	145.54	

(1) There are four gains corresponding to each of the four Temperature Trip Point Ranges:
J2 (-5.166 mV/°C) is the temperature sensor output gain used for Temperature Trip Points −40.68°C to 51.8°C.
J3 (-7.752 mV/°C) is for Trip Points 52°C to 97°C.
J4 (-10.339 mV/°C) for 97°C to 119°C.
J5 (-12.924 mV/°C) for 119°C to 150°C.

Copyright © 2009–2015, Texas Instruments Incorporated

Table 5. V_{TEMP} (mV) at the Trip Point vs Sense Resistor (R_{SENSE}) Value (Ω)

		R_{SENSE2}												
		J2 (1)				J3 (1)			J4 (1)		J5 (1)			
		976 kΩ	825 kΩ	698 kΩ	590 kΩ	499 kΩ	412 kΩ	340 kΩ	280 kΩ	226 kΩ	178 kΩ	140 kΩ	105 kΩ	75 kΩ
R_{SENSE1}	976 kΩ	1306.23	1183.77	1064.00	945.63	1243.67	1125.34	1006.75	1185.27	1066.00	1184.05	1064.59	944.83	824.96
	825 kΩ	1298.50	1176.23	1056.56	938.23	1236.27	1117.93	999.34	1177.83	1058.52	1176.57	1057.10	937.33	817.53
	698 kΩ	1290.72	1168.70	1049.13	930.83	1228.88	1110.52	991.92	1170.40	1051.03	1169.10	1049.62	929.83	810.09
	590 kΩ	1283.03	1161.16	1041.69	923.43	1221.48	1103.10	984.51	1162.96	1043.55	1161.63	1042.13	922.33	802.66
	499 kΩ	1275.33	1153.62	1034.26	916.02	1214.09	1095.69	977.09	1155.52	1036.07	1154.16	1034.65	914.83	795.22
	412 kΩ	1267.64	1146.09	1026.82	908.62	1206.69	1088.28	969.66	1148.09	1028.59	1146.68	1027.16	907.33	787.78
	340 kΩ	1259.94	1138.55	1019.38	901.22	1199.30	1080.87	962.22	1140.65	1021.10	1139.21	1019.67	899.83	780.35
	280 kΩ	1252.25	1131.02	1011.99	893.82	1191.90	1073.45	954.78	1133.22	1013.62	1131.74	1012.19	892.33	772.91
	226 kΩ	1244.55	1123.48	1004.62	886.42	1184.50	1066.04	947.35	1125.78	1006.14	1124.27	1004.70	884.83	765.48
	178 kΩ	1236.99	1116.05	997.26	879.02	1177.11	1058.63	939.91	1118.35	998.66	1116.79	997.22	877.33	
	140 kΩ	1229.38	1108.61	989.89	871.61	1169.71	1051.22	932.48	1110.91	991.17	1109.32	989.73	869.82	
	105 kΩ	1221.76	1101.18	982.53	864.21	1162.32	1043.80	925.04	1103.48	983.69	1101.85	982.25	862.32	
	75 kΩ	1214.15	1093.74	975.16	856.81	1154.92	1036.39	917.61	1096.04	976.21	1094.38	974.76	854.82	
	46.4 kΩ	1206.53	1086.30	967.80	849.41	1147.53	1028.98	910.17	1088.60	968.73	1086.90	967.28	847.32	
	22.6 kΩ	1198.92	1078.87	960.43	842.01	1140.13	1021.57	902.74	1081.17	961.24	1079.43	959.79	839.82	
	0.01 kΩ	1191.30	1071.43	953.07	834.62	1132.74	1014.15	895.30	1073.73	953.76	1072.04	952.31	832.32	

(1) There are four gains corresponding to each of the four Temperature Trip Point Ranges:
J2 (-5.166 mV/°C) is the temperature sensor output gain used for Temperature Trip Points −40.68°C to 51.8°C.
J3 (-7.752 mV/°C) is for Trip Points 52°C to 97°C.
J4 (-10.339 mV/°C) for 97°C to 119°C.
J5 (-12.924 mV/°C) for 119°C to 150°C.

Copyright © 2009–2015, Texas Instruments Incorporated

8.3.4 T_{OVER} and $\overline{T_{OVER}}$ Digital Outputs

The T_{OVER} active high, push-pull output and the $\overline{T_{OVER}}$ Active Low, Open-Drain Output both assert at the same time whenever the Die Temperature reaches the Trip Point. They also assert simultaneously whenever the TRIP TEST pin is set high. Both outputs de-assert when the die temperature goes below the (Temperature Trip Point) - (Hysteresis). These two types of digital outputs enable the user the flexibility to choose the type of output that is most suitable for his design.

Either the T_{OVER} or the $\overline{T_{OVER}}$ Digital Output pins can be left open if not used.

The $\overline{T_{OVER}}$ Active Low, Open-Drain Digital Output, if used, requires a pullup resistor between this pin and V_{DD}.

8.3.4.1 T_{OVER} and $\overline{T_{OVER}}$ Noise Immunity

The LM57 has some noise immunity to a premature trigger due to noise on the power supply. With the die temperature at 1°C below the trip point, there are no premature triggers for a square wave injected into the power supply with a magnitude of 100 mV_{PP} over a frequency range of 100 Hz to 2 MHz. Above the frequency a premature trigger may occur.

With the die temperature at 2°C below the trip point, and a magnitude of 200 mV_{PP}, there are no premature triggers from 100 Hz to 300 kHz. Above that frequency a premature trigger may occur.

Therefore if the supply line is noisy, it is recommended that a local supply decoupling capacitor be used to reduce that noise.

8.3.5 Trip Test Digital Input

The TRIP TEST pin provides a means to test the digital outputs by causing them to assert, regardless of temperature.

In addition, when the TRIP TEST pin is pulled high the V_{TEMP} pin will be at the V_{TRIP} voltage.

8.3.6 V_{TEMP} Analog Temperature Sensor Output

The V_{TEMP} push-pull output provides the ability to sink and source significant current. This is beneficial when, for example, driving dynamic loads like an input stage on an analog-to-digital converter (ADC). In these applications the source current is required to quickly charge the input capacitor of the ADC. See the *Typical Application* section for more discussion of this topic. The LM57 is ideal for this and other applications which require strong source or sink current.

8.3.6.1 V_{TEMP} Noise Considerations

A load capacitor on V_{TEMP} can help to filter noise.

For noisy environments, TI recommends a 100 nF supply decoupling capacitor placed closed across V_{DD} and GND pins of LM57.

Copyright © 2009–2015, Texas Instruments Incorporated

8.3.6.2 V_{TEMP} Capacitive Loads

The V_{TEMP} Output handles capacitive loading well. In an extremely noisy environment, or when driving a switched sampling input on an ADC, it may be necessary to add some filtering to minimize noise coupling. Without any precautions, the V_{TEMP} can drive a capacitive load less than or equal to 1100 pF as shown in Figure 13. For capacitive loads greater than 1100 pF, a series resistor is required on the output, as shown in Figure 14, to maintain stable conditions.

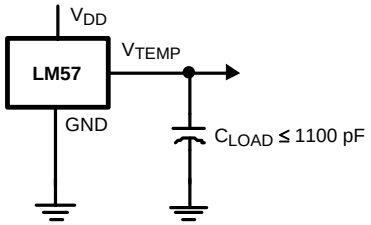

Figure 13. LM57 With No Isolation Resistor Required

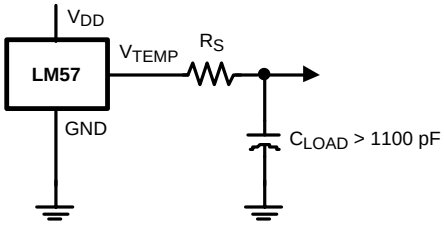

Figure 14. LM57 With Series Resistor for Capacitive Loading Greater than 1100 pF

Table 6. C_{LOAD} and R_S Values of Figure 14

C_{LOAD}	Minimum R_S
1.1 to 99 nF	3 kΩ
100 to 999 nF	1.5 kΩ
1 µF	750 Ω

8.3.6.3 V_{TEMP} Voltage Shift

The LM57 is very linear over temperature and supply voltage range. Due to the intrinsic behavior of an NMOS/PMOS rail-to-rail buffer, a slight shift in the output can occur when the supply voltage is ramped over the operating range of the device. The location of the shift is determined by the relative levels of V_{DD} and V_{TEMP}. The shift typically occurs when $V_{DD} - V_{TEMP} = 1$ V.

This slight shift (a few millivolts) takes place over a wide change (approximately 200 mV) in V_{DD} or V_{TEMP}. Since the shift takes place over a wide temperature change of 5°C to 20°C, V_{TEMP} is always monotonic. The accuracy specifications in the table already includes this possible shift.

8.4 Device Functional Modes

The LM57 has several modes of operation as detailed in the following drawings.

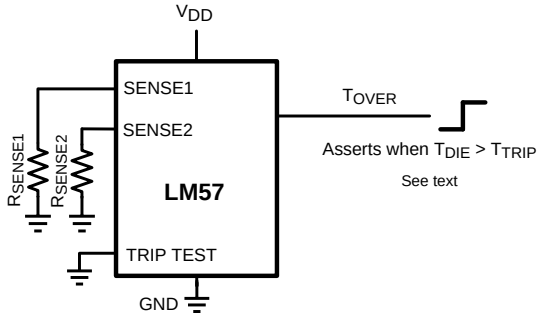

Figure 15. Temperature Switch Using Push-Pull Output

Device Functional Modes (continued)

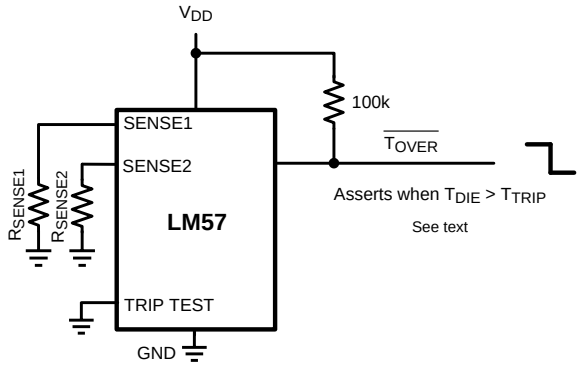

Figure 16. Temperature Switch Using Open-Drain Output

As shown in Figure 17 the LM57 has a TRIP Test input simplifying in situ board conductivity testing. Forcing TRIP TEST pin "HIGH" will drive the $\overline{T_{OVER}}$ pin "LOW" and the T_{OVER} pin "HIGH".

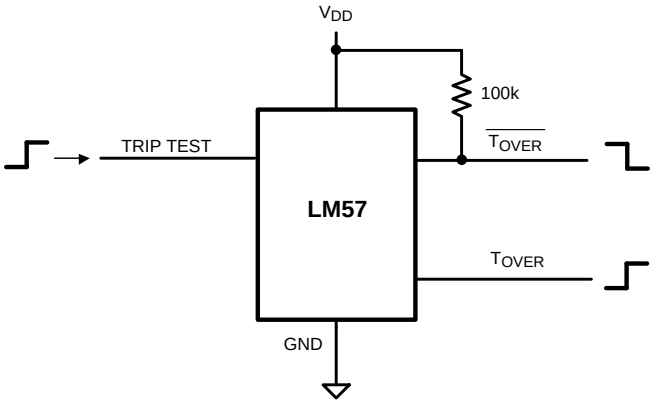

Figure 17. Trip Test Digital Output Test Circuit

In the circuit shown in Figure 18 when T_{OVER} goes active high, it drives trip test high. Trip test high causes T_{OVER} to stay high. It is therefore latched. To release the latch, power down, then power up. The LM57 always comes up in a released condition.

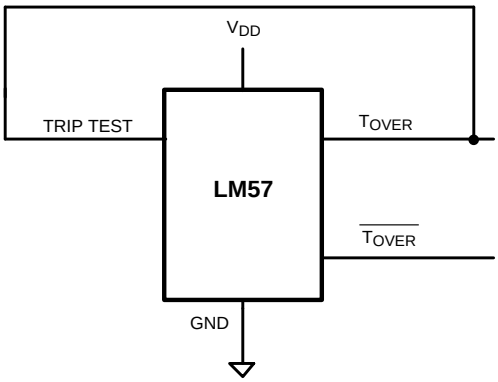

Figure 18. Simple Latch Circuit

Copyright © 2009–2015, Texas Instruments Incorporated

Device Functional Modes (continued)

The TRIP TEST pin, normally used to check the operation of the T_{OVER} and $\overline{T_{OVER}}$ pins, may be used to latch the outputs whenever the temperature exceeds the programmed limit and causes the digital outputs to assert. As shown in Figure 19, when T_{OVER} goes high, the TRIP TEST input is also pulled high and causes T_{OVER} output to latch high and the $\overline{T_{OVER}}$ output to latch low. Momentarily switching the TRIP TEST input low will reset the LM57 to normal operation. The resistor limits the current out of the T_{OVER} output pin.

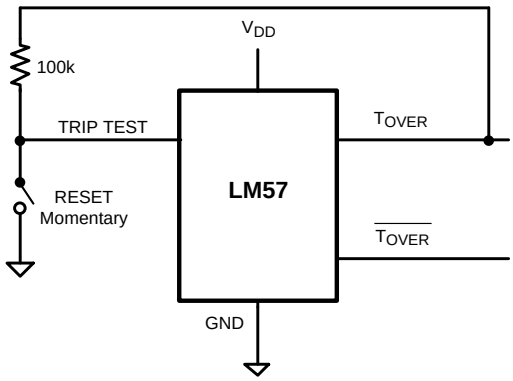

Figure 19. Latch Circuit Using T_{OVER} Output

9 Application and Implementation

NOTE

Information in the following applications sections is not part of the TI component specification, and TI does not warrant its accuracy or completeness. TI's customers are responsible for determining suitability of components for their purposes. Customers should validate and test their design implementation to confirm system functionality.

9.1 Application Information

The LM57 has several outputs allowing for varying system implementations.

9.1.1 ADC Input Considerations

The LM57 has an analog temperature sensor output (V_{TEMP}) that can be directly connected to an ADC (Analog to Digital Converter) input. Most CMOS ADCs found in microcontrollers and ASICs have a sampled data comparator input structure. When the ADC charges the sampling cap, it requires instantaneous charge from the output of the analog source such as the LM57 temperature sensor and many op amps. This requirement is easily accommodated by the addition of a capacitor (C_{FILTER}). The size of C_{FILTER} depends on the size of the sampling capacitor and the sampling frequency. Because not all ADCs have identical input stages, the charge requirements will vary. The general ADC application shown in Figure 20 is an example only.

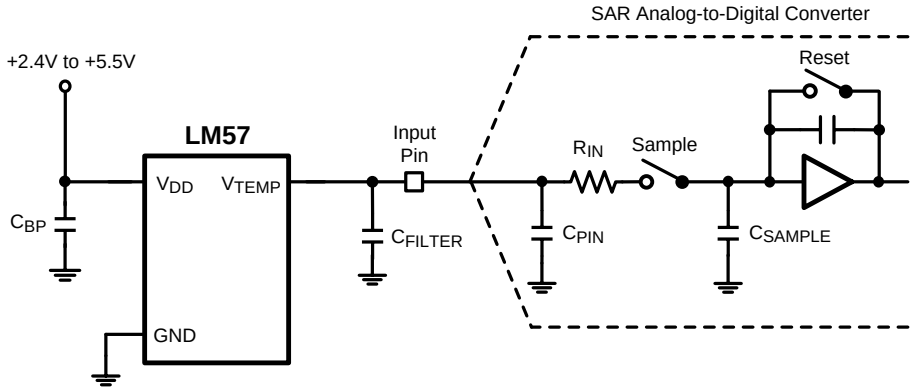

Figure 20. Suggested Connection to a Sampling Analog-to-Digital Converter Input Stage

9.2 Typical Application

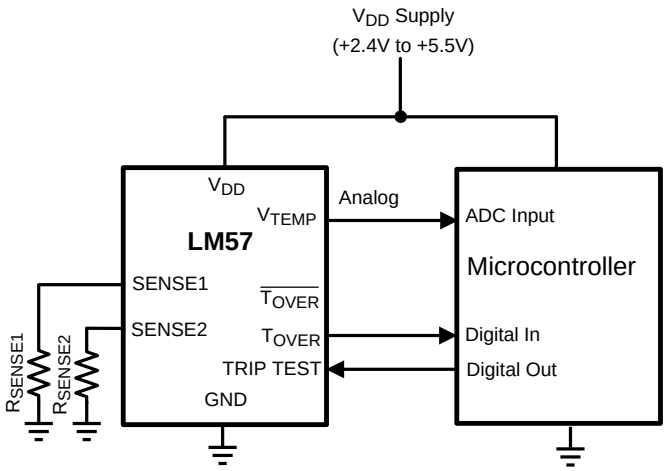

Figure 21. Typical Application Schematic with Microcontroller TRIP TEST Control

Copyright © 2009–2015, Texas Instruments Incorporated

Typical Application (continued)

9.2.1 Design Requirements

By simply selecting the value of two resistors the trip point of the LM57 can easily be programmed as described in the following section. If standard 1% values are used the actual trip point threshold is not degraded and stands as described in the Electrical Characteristics section ( ).

9.2.2 Detailed Design Procedure

9.2.2.1 Selection of R_{SENSE} Resistors

To set the trip point:

1. Locate the desired trip temperature in Table 4.
2. Identify the corresponding R_{SENSE2} value by following the column up to the resistor value.
3. Identify the corresponding R_{SENSE1} value by following the row leftwards to the resistor value.
4. Use only the EIA E96 standard resistor values from the list.
5. Use only a resistor with 1% tolerance and a temperature coefficient of 100 ppm (or better). These restrictions are necessary to stay at the selected setting, and not to slip into an adjacent setting.
6. This is consistent with using resistors from the thick film chip resistors CRCW0402 family. These are available with very small dimensions of L = 1 mm, W = 0.5 mm, H = 0.35 mm.
7. Note that the resistor tolerance does not diminish the accuracy of the trip point. As can be seen in the block diagram these inputs drive the logic inputs of a DAC thus their tolerance does affect the trip point accuracy unless the DAC setting slips into an adjacent level. See patent number 6924758.

9.2.3 Application Curves

The typical performance of the LM57 temperature sensor output can be seen in Figure 22. Figure 23 shows the output behavior of the LM57 T_{OVER} output.

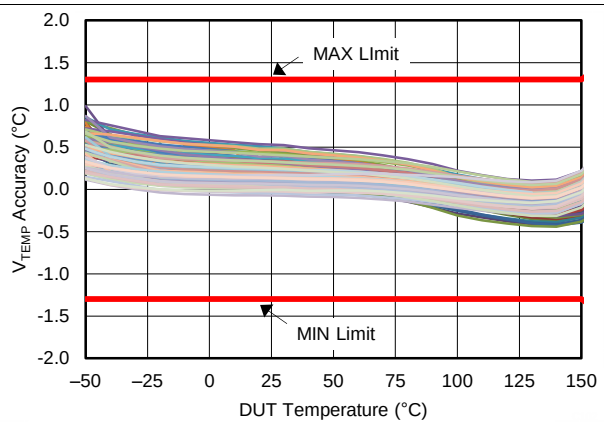

Figure 22. J2 V_{TEMP} Accuracy Characteristics

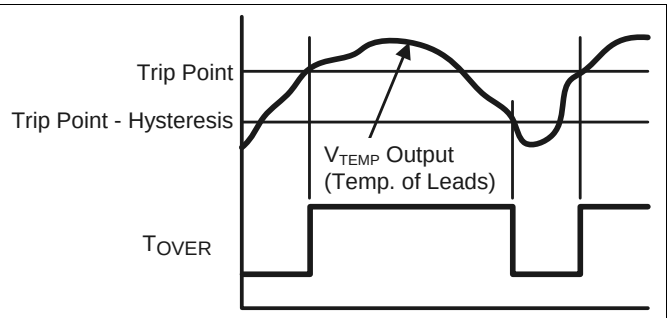

Figure 23. Output Transfer Characteristic

Typical Application (continued)

9.2.4 Grounding of the TRIP TEST Pin

The circuit in Figure 24 shows the TRIP TEST pin grounded. This allows the LM57 to function autonomously without microcontroller intervention. In all other respects this circuit functions similarly to the circuit shown in Figure 21.

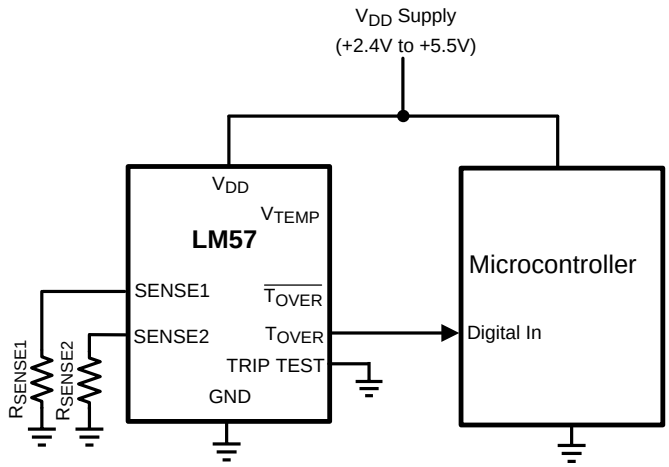

Figure 24. Typical Application Schematic without Microcontroller TRIP TEST Control

10 Power Supply Recommendations

Power supply bypass capacitors are optional and may be required if the supply line is noisy. TI recommends that a local supply decoupling capacitor be used to reduce noise. For noisy environments, TI recommends a 100-nF supply decoupling capacitor placed closed across V_{DD} and GND pins of LM57.

11 Layout

11.1 Layout Guidelines

The LM57 can be applied easily in the same way as other integrated-circuit temperature sensors. It can be glued or cemented to a surface. The temperatures of the lands and traces to the other leads of the LM57 will also affect the temperature reading.

Alternatively, the LM57 can be mounted inside a sealed-end metal tube, and can then be dipped into a bath or screwed into a threaded hole in a tank. As with any IC, the LM57 and accompanying wiring and circuits must be kept insulated and dry, to avoid leakage and corrosion. This is especially true if the circuit may operate at cold temperatures where condensation can occur. If moisture creates a short circuit from the V_{TEMP} output to ground or V_{DD}, the V_{TEMP} output from the LM57 will not be correct. Printed-circuit coatings are often used to ensure that moisture cannot corrode the leads or circuit traces.

Copyright © 2009–2015, Texas Instruments Incorporated

11.2 Layout Example

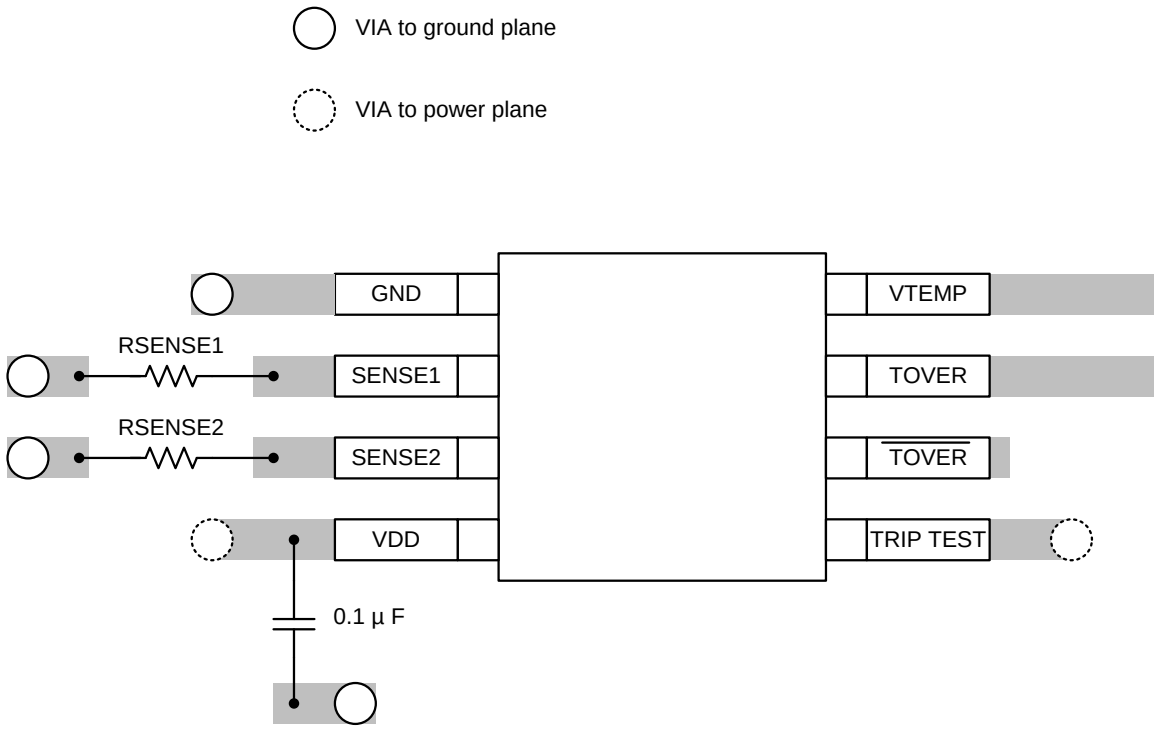

Figure 25. PW (TSSOP) Package Layout Example

Layout Example (continued)

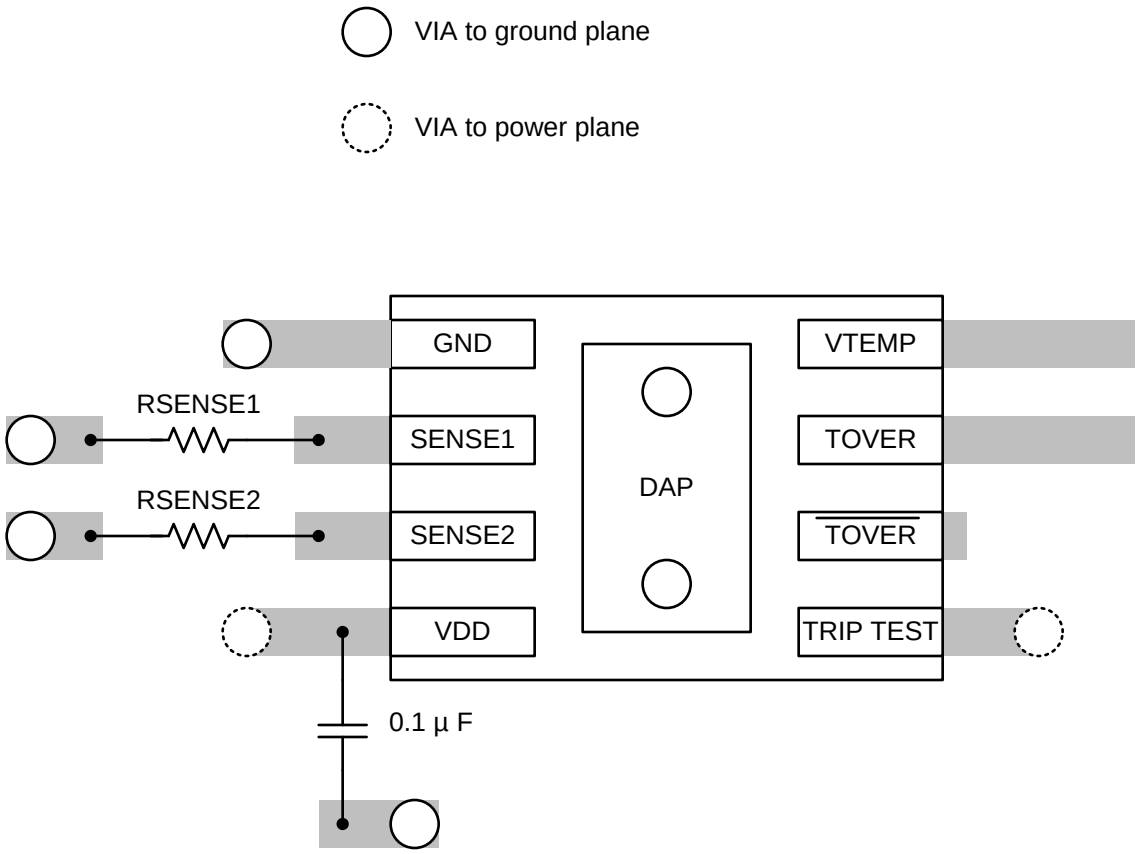

The best thermal conductivity to the junction of the LM57 is through the DAP. Make sure it is connected to the surface whose temperature that is being measured.

Figure 26. SD (WSON) Package Layout Example

11.3 Temperature Considerations

The junction temperature of the LM57 is the actual temperature being measured. The thermal resistance junction-to-ambient ($R_{\theta JA}$) is the parameter (from *Thermal Information*) used to calculate the rise of a device junction temperature due to its power dissipation. Equation 3 is used to calculate the rise in the die temperature of the LM57.

$$T_J = T_A + R_{\theta JA} \left[(V_{DD} I_Q) + (V_{DD} - V_{TEMP}) \; I_L \right]$$

where

- T_A is the ambient temperature.
- I_Q is the quiescent current.
- I_L is the load current on V_{TEMP}.
- $R_{\theta JA}$ can be found in *Thermal Information* (3)

For example using an LM57 in the PW (TSSOP) package, in an application where T_A = 30°C, V_{DD} = 5.5 V, I_{DD} = 28 µA, J5 gain, V_{TEMP} = 2368 mV, and I_L = 0 µA, the total temperature rise would be [183°C/W × 5.5 V × 28 µA] = 0.028°C. To minimize self-heating, the load current on V_{TEMP} should be minimized.

Copyright © 2009–2015, Texas Instruments Incorporated

12 Device and Documentation Support

12.1 Documentation Support

12.1.1 Related Documentation

For related documentation, see the following:

- LM57-Q1 Automotive Grade Data Sheet.
- *Reflow Temperature Profile* specifications, www.ti.com/packaging.
- *IC Package Thermal Metrics* application report, SPRA953

12.2 Community Resources

The following links connect to TI community resources. Linked contents are provided "AS IS" by the respective contributors. They do not constitute TI specifications and do not necessarily reflect TI's views; see TI's Terms of Use.

TI E2E™ Online Community ***TI's Engineer-to-Engineer (E2E) Community.*** Created to foster collaboration among engineers. At e2e.ti.com, you can ask questions, share knowledge, explore ideas and help solve problems with fellow engineers.

Design Support ***TI's Design Support*** Quickly find helpful E2E forums along with design support tools and contact information for technical support.

12.3 Trademarks

E2E is a trademark of Texas Instruments.
All other trademarks are the property of their respective owners.

12.4 Electrostatic Discharge Caution

These devices have limited built-in ESD protection. The leads should be shorted together or the device placed in conductive foam during storage or handling to prevent electrostatic damage to the MOS gates.

12.5 Glossary

SLYZ022 — *TI Glossary*.

This glossary lists and explains terms, acronyms, and definitions.

13 Mechanical, Packaging, and Orderable Information

The following pages include mechanical, packaging, and orderable information. This information is the most current data available for the designated devices. This data is subject to change without notice and revision of this document. For browser-based versions of this data sheet, refer to the left-hand navigation.

PACKAGING INFORMATION

Orderable part number	Status (1)	Material type (2)	Package | Pins	Package qty | Carrier	RoHS (3)	Lead finish/ Ball material (4)	MSL rating/ Peak reflow (5)	Op temp (°C)	Part marking (6)
LM57BISD-10/NOPB	Obsolete	Production	WSON (NGR) | 8	-	-	Call TI	Call TI	-50 to 150	57B9
LM57BISD-5/NOPB	Obsolete	Production	WSON (NGR) | 8	-	-	Call TI	Call TI	-50 to 150	57B5
LM57BISDX-10/NOPB	Active	Production	WSON (NGR) | 8	4500 | LARGE T&R	Yes	SN	Level-3-260C-168 HR	-50 to 150	57B9
LM57BISDX-10/NOPB.A	Active	Production	WSON (NGR) | 8	4500 | LARGE T&R	Yes	SN	Level-3-260C-168 HR	-50 to 150	57B9
LM57BISDX-5/NOPB	Active	Production	WSON (NGR) | 8	4500 | LARGE T&R	Yes	SN	Level-3-260C-168 HR	-50 to 150	57B5
LM57BISDX-5/NOPB.A	Active	Production	WSON (NGR) | 8	4500 | LARGE T&R	Yes	SN	Level-3-260C-168 HR	-50 to 150	57B5
LM57CISD-10/NOPB	Obsolete	Production	WSON (NGR) | 8	-	-	Call TI	Call TI	-50 to 150	57C9
LM57CISD-5/NOPB	Obsolete	Production	WSON (NGR) | 8	-	-	Call TI	Call TI	-50 to 150	57C5
LM57CISDX-10/NOPB	Active	Production	WSON (NGR) | 8	4500 | LARGE T&R	Yes	SN	Level-3-260C-168 HR	-50 to 150	57C9
LM57CISDX-10/NOPB.A	Active	Production	WSON (NGR) | 8	4500 | LARGE T&R	Yes	SN	Level-3-260C-168 HR	-50 to 150	57C9
LM57CISDX-5/NOPB	Active	Production	WSON (NGR) | 8	4500 | LARGE T&R	Yes	SN	Level-3-260C-168 HR	-50 to 150	57C5
LM57CISDX-5/NOPB.A	Active	Production	WSON (NGR) | 8	4500 | LARGE T&R	Yes	SN	Level-3-260C-168 HR	-50 to 150	57C5
LM57FPWR	Active	Production	TSSOP (PW) | 8	2000 | LARGE T&R	Yes	NIPDAU	Level-2-260C-1 YEAR	-50 to 150	LM57F
LM57FPWR.A	Active	Production	TSSOP (PW) | 8	2000 | LARGE T&R	Yes	NIPDAU	Level-2-260C-1 YEAR	-50 to 150	LM57F
LM57TPWR	Active	Production	TSSOP (PW) | 8	2000 | LARGE T&R	Yes	NIPDAU	Level-2-260C-1 YEAR	-50 to 150	LM57T
LM57TPWR.A	Active	Production	TSSOP (PW) | 8	2000 | LARGE T&R	Yes	NIPDAU	Level-2-260C-1 YEAR	-50 to 150	LM57T

(1) **Status:** For more details on status, see our product life cycle.

(2) **Material type:** When designated, preproduction parts are prototypes/experimental devices, and are not yet approved or released for full production. Testing and final process, including without limitation quality assurance, reliability performance testing, and/or process qualification, may not yet be complete, and this item is subject to further changes or possible discontinuation. If available for ordering, purchases will be subject to an additional waiver at checkout, and are intended for early internal evaluation purposes only. These items are sold without warranties of any kind.

(3) **RoHS values:** Yes, No, RoHS Exempt. See the TI RoHS Statement for additional information and value definition.

(4) **Lead finish/Ball material:** Parts may have multiple material finish options. Finish options are separated by a vertical ruled line. Lead finish/Ball material values may wrap to two lines if the finish value exceeds the maximum column width.

(5) **MSL rating/Peak reflow:** The moisture sensitivity level ratings and peak solder (reflow) temperatures. In the event that a part has multiple moisture sensitivity ratings, only the lowest level per JEDEC standards is shown. Refer to the shipping label for the actual reflow temperature that will be used to mount the part to the printed circuit board.

(6) **Part marking:** There may be an additional marking, which relates to the logo, the lot trace code information, or the environmental category of the part.

Multiple part markings will be inside parentheses. Only one part marking contained in parentheses and separated by a "~" will appear on a part. If a line is indented then it is a continuation of the previous line and the two combined represent the entire part marking for that device.

Important Information and Disclaimer: The information provided on this page represents TI's knowledge and belief as of the date that it is provided. TI bases its knowledge and belief on information provided by third parties, and makes no representation or warranty as to the accuracy of such information. Efforts are underway to better integrate information from third parties. TI has taken and continues to take reasonable steps to provide representative and accurate information but may not have conducted destructive testing or chemical analysis on incoming materials and chemicals. TI and TI suppliers consider certain information to be proprietary, and thus CAS numbers and other limited information may not be available for release.

In no event shall TI's liability arising out of such information exceed the total purchase price of the TI part(s) at issue in this document sold by TI to Customer on an annual basis.

OTHER QUALIFIED VERSIONS OF LM57 :

- Automotive : LM57-Q1

NOTE: Qualified Version Definitions:

- Automotive - Q100 devices qualified for high-reliability automotive applications targeting zero defects

TAPE AND REEL INFORMATION

REEL DIMENSIONS

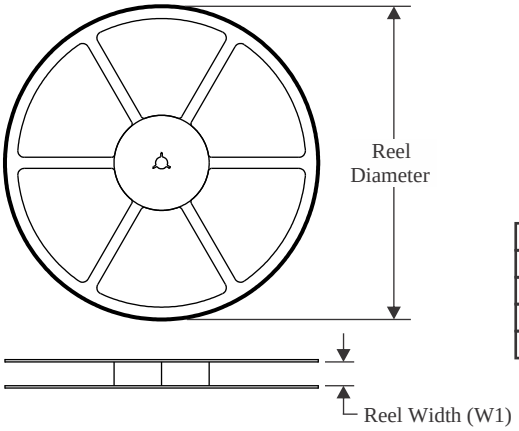

TAPE DIMENSIONS

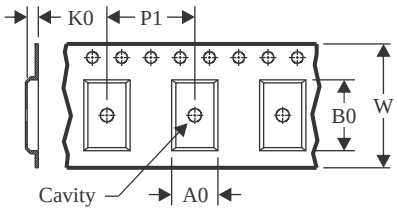

A0	Dimension designed to accommodate the component width
B0	Dimension designed to accommodate the component length
K0	Dimension designed to accommodate the component thickness
W	Overall width of the carrier tape
P1	Pitch between successive cavity centers

QUADRANT ASSIGNMENTS FOR PIN 1 ORIENTATION IN TAPE

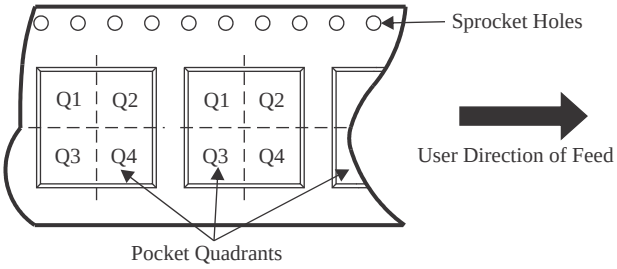

*All dimensions are nominal

Device	Package Type	Package Drawing	Pins	SPQ	Reel Diameter (mm)	Reel Width W1 (mm)	A0 (mm)	B0 (mm)	K0 (mm)	P1 (mm)	W (mm)	Pin1 Quadrant
LM57BISDX-10/NOPB	WSON	NGR	8	4500	330.0	12.4	2.8	2.8	1.0	8.0	12.0	Q1
LM57BISDX-5/NOPB	WSON	NGR	8	4500	330.0	12.4	2.8	2.8	1.0	8.0	12.0	Q1
LM57CISDX-10/NOPB	WSON	NGR	8	4500	330.0	12.4	2.8	2.8	1.0	8.0	12.0	Q1
LM57CISDX-5/NOPB	WSON	NGR	8	4500	330.0	12.4	2.8	2.8	1.0	8.0	12.0	Q1
LM57FPWR	TSSOP	PW	8	2000	330.0	12.4	7.0	3.6	1.6	8.0	12.0	Q1
LM57TPWR	TSSOP	PW	8	2000	330.0	12.4	7.0	3.6	1.6	8.0	12.0	Q1

TAPE AND REEL BOX DIMENSIONS

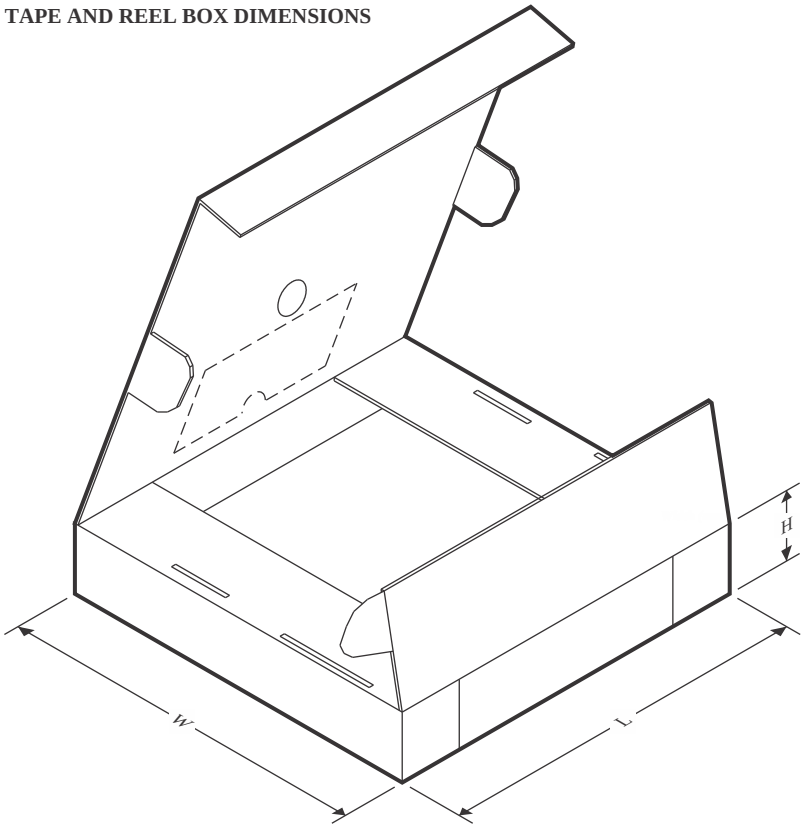

*All dimensions are nominal

Device	Package Type	Package Drawing	Pins	SPQ	Length (mm)	Width (mm)	Height (mm)
LM57BISDX-10/NOPB	WSON	NGR	8	4500	356.0	356.0	36.0
LM57BISDX-5/NOPB	WSON	NGR	8	4500	356.0	356.0	36.0
LM57CISDX-10/NOPB	WSON	NGR	8	4500	356.0	356.0	36.0
LM57CISDX-5/NOPB	WSON	NGR	8	4500	356.0	356.0	36.0
LM57FPWR	TSSOP	PW	8	2000	353.0	353.0	32.0
LM57TPWR	TSSOP	PW	8	2000	353.0	353.0	32.0

GENERIC PACKAGE VIEW

NGR 8

WSON - 0.8 mm max height

2.5 x 2.5, 0.5 mm pitch

PLASTIC SMALL OUTLINE - NO LEAD

This image is a representation of the package family, actual package may vary.
Refer to the product data sheet for package details.

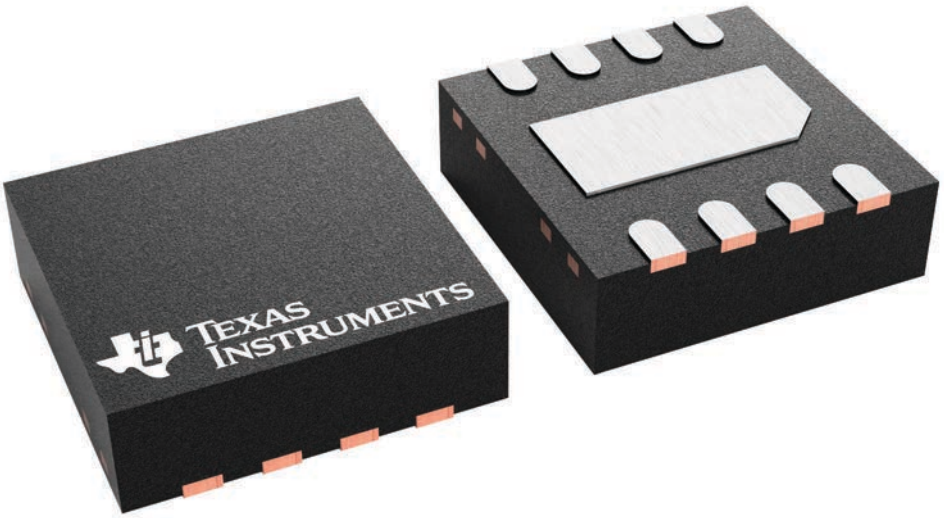

4227146/A

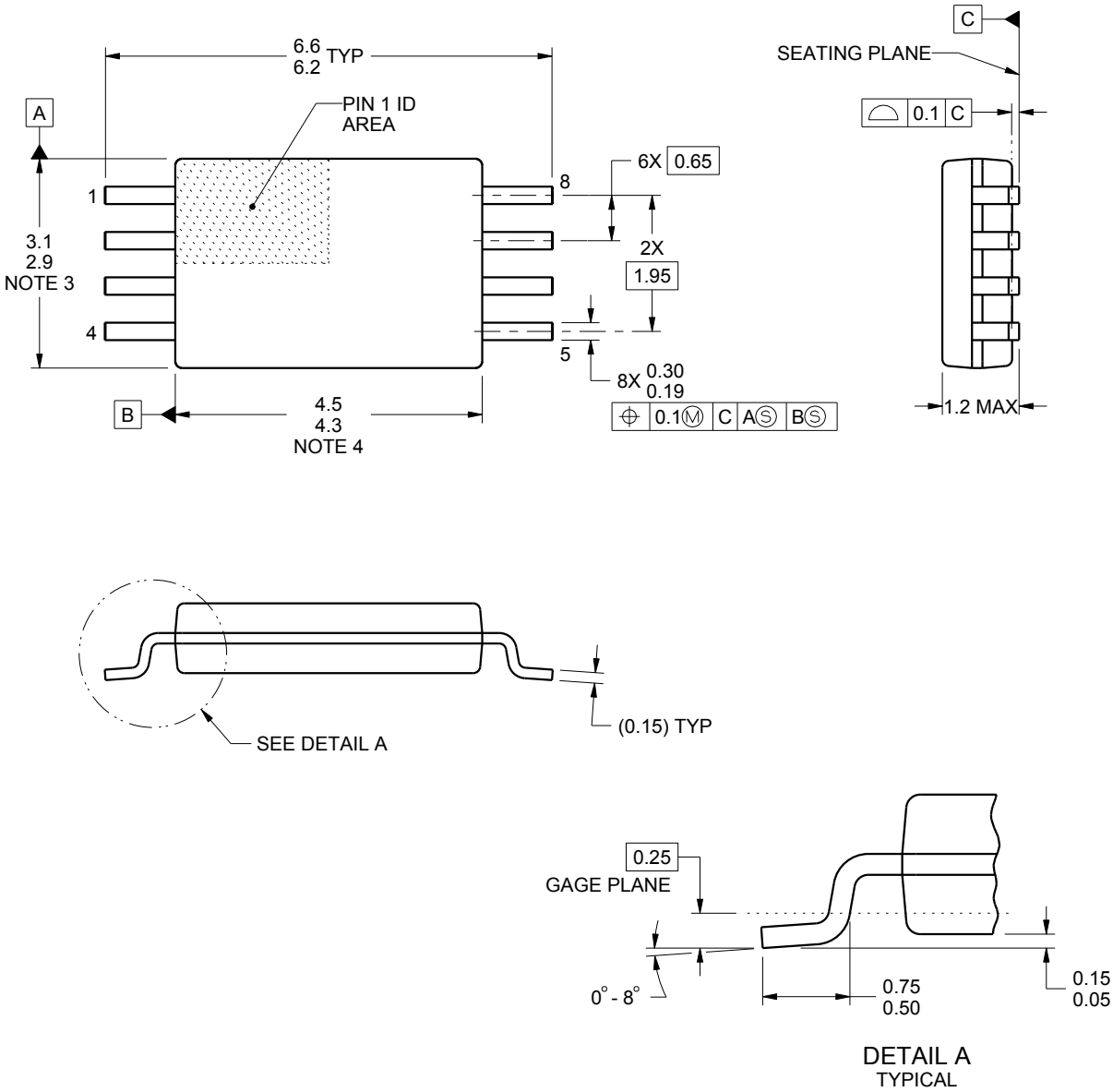

NOTES:

1. All linear dimensions are in millimeters. Any dimensions in parenthesis are for reference only. Dimensioning and tolerancing per ASME Y14.5M.
2. This drawing is subject to change without notice.
3. This dimension does not include mold flash, protrusions, or gate burrs. Mold flash, protrusions, or gate burrs shall not exceed 0.15 mm per side.
4. This dimension does not include interlead flash. Interlead flash shall not exceed 0.25 mm per side.
5. Reference JEDEC registration MO-153, variation AA.

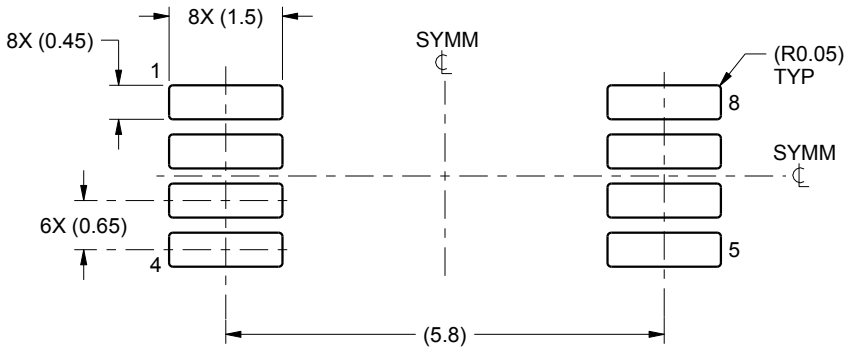

LAND PATTERN EXAMPLE
SCALE:10X

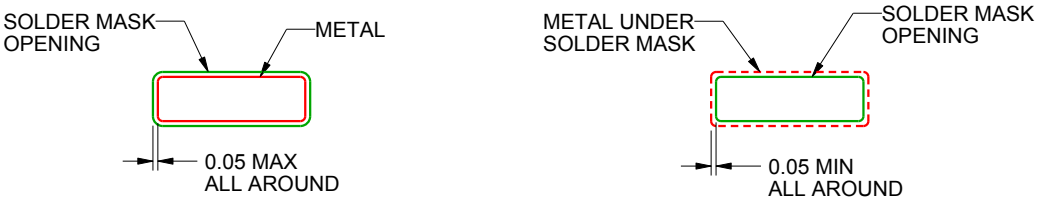

NON SOLDER MASK
DEFINED

SOLDER MASK
DEFINED

SOLDER MASK DETAILS
NOT TO SCALE

4221848/A 02/2015

NOTES: (continued)

6. Publication IPC-7351 may have alternate designs.
7. Solder mask tolerances between and around signal pads can vary based on board fabrication site.

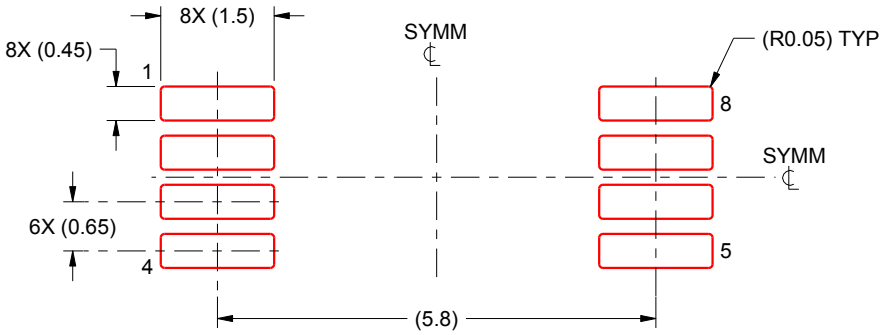

SOLDER PASTE EXAMPLE
BASED ON 0.125 mm THICK STENCIL
SCALE:10X

4221848/A 02/2015

NOTES: (continued)

8. Laser cutting apertures with trapezoidal walls and rounded corners may offer better paste release. IPC-7525 may have alternate design recommendations.
9. Board assembly site may have different recommendations for stencil design.

IMPORTANT NOTICE AND DISCLAIMER

TI PROVIDES TECHNICAL AND RELIABILITY DATA (INCLUDING DATASHEETS), DESIGN RESOURCES (INCLUDING REFERENCE DESIGNS), APPLICATION OR OTHER DESIGN ADVICE, WEB TOOLS, SAFETY INFORMATION, AND OTHER RESOURCES “AS IS” AND WITH ALL FAULTS, AND DISCLAIMS ALL WARRANTIES, EXPRESS AND IMPLIED, INCLUDING WITHOUT LIMITATION ANY IMPLIED WARRANTIES OF MERCHANTABILITY, FITNESS FOR A PARTICULAR PURPOSE OR NON-INFRINGEMENT OF THIRD PARTY INTELLECTUAL PROPERTY RIGHTS.

These resources are intended for skilled developers designing with TI products. You are solely responsible for (1) selecting the appropriate TI products for your application, (2) designing, validating and testing your application, and (3) ensuring your application meets applicable standards, and any other safety, security, regulatory or other requirements.

These resources are subject to change without notice. TI grants you permission to use these resources only for development of an application that uses the TI products described in the resource. Other reproduction and display of these resources is prohibited. No license is granted to any other TI intellectual property right or to any third party intellectual property right. TI disclaims responsibility for, and you fully indemnify TI and its representatives against any claims, damages, costs, losses, and liabilities arising out of your use of these resources.

TI’s products are provided subject to TI’s Terms of Sale, TI’s General Quality Guidelines, or other applicable terms available either on ti.com or provided in conjunction with such TI products. TI’s provision of these resources does not expand or otherwise alter TI’s applicable warranties or warranty disclaimers for TI products. Unless TI explicitly designates a product as custom or customer-specified, TI products are standard, catalog, general purpose devices.

TI objects to and rejects any additional or different terms you may propose.

Copyright © 2025, Texas Instruments Incorporated

Last updated 10/2025