LM87 Serial Interface System Hardware Monitor with Remote Diode Temperature Sensing

Check for Samples: LM87

FEATURES

- **Remote diode temperature sensing (2 channels)**
- **8 positive voltage inputs with scaling resistors for monitoring +5 V, +12 V, +3.3 V, +2.5 V, Vccp power supplies directly**
- **2 inputs selectable for fan speed or voltage monitoring**
- **8-bit DAC output for controlling fan speed**
- **Chassis Intrusion Detector input**
- **WATCHDOG comparison of all monitored values**
- **SMBus™ or I^2C Serial Bus interface compatibility**
- **VID0-VID4 or IRQ0-IRQ4 monitoring inputs**
- **On chip temperature sensor**

APPLICATIONS

- **System Thermal and Hardware Monitoring for Servers, Workstations and PCs**
- **Networking and Telecom Equipment**
- **Office Electronics**
- **Electronic Test Equipment and Instrumentation**

KEY SPECIFICATIONS

- **Voltage Monitoring Error ±2 % (max)**
- **External Temperature Error ±4 °C (max)**
- **Internal Temperature Error**
  - **−40 °C to +125 °C ± 3 °C (typ)**
- **Supply Voltage Range 2.8 to 3.8 V**
- **Supply Current 0.7 mA (typ)**
- **ADC and DAC Resolution 8 Bits**
- **Temperature Resolution 1.0 °C**

DESCRIPTION

The LM87 is a highly integrated data acquisition system for hardware monitoring of servers, Personal Computers, or virtually any microprocessor-based system. In a PC, the LM87 can be used to monitor power supply voltages, motherboard and processor temperatures, and fan speeds. Actual values for these inputs can be read at any time. Programmable WATCHDOG limits in the LM87 activate a fully programmable and maskable interrupt system with two outputs (INT# and THERM#).

The LM87 has an on-chip digital output temperature sensor with 8-bit resolution as well as the capability of monitoring 2 external diode temperatures to 8-bit resolution, an 8 channel analog input ADC with 8-bit resolution and an 8-bit DAC. A channel on the ADC measures the supply voltage applied to the LM87, nominally 3.3 V. Two of the ADC inputs can be redirected to a counter that can measure the speed of up to 2 fans. A slow speed ΣΔ ADC architecture allows stable measurement of signals in an extremely noisy environment. The DAC, with a 0 to 2.5 V output voltage range, can be used for fan speed control. Additional inputs are provided for Chassis Intrusion detection circuits, and VID monitor inputs. The VID monitor inputs can also be used as IRQ inputs if VID monitoring is not required. The LM87 has a Serial Bus interface that is compatible with SMBus™ and I^2C™.

Connection Diagram

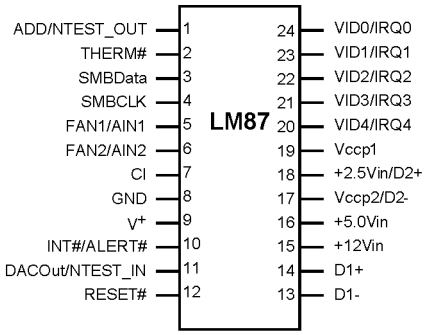

Please be aware that an important notice concerning availability, standard warranty, and use in critical applications of Texas Instruments semiconductor products and disclaimers thereto appears at the end of this data sheet.

SMBus is a trademark of Intel Corporation.
I^2C is a trademark of dcl_owner.
All other trademarks are the property of their respective owners.

PRODUCTION DATA information is current as of publication date. Products conform to specifications per the terms of the Texas Instruments standard warranty. Production processing does not necessarily include testing of all parameters.

Copyright © 2000–2013, Texas Instruments Incorporated

Block Diagram

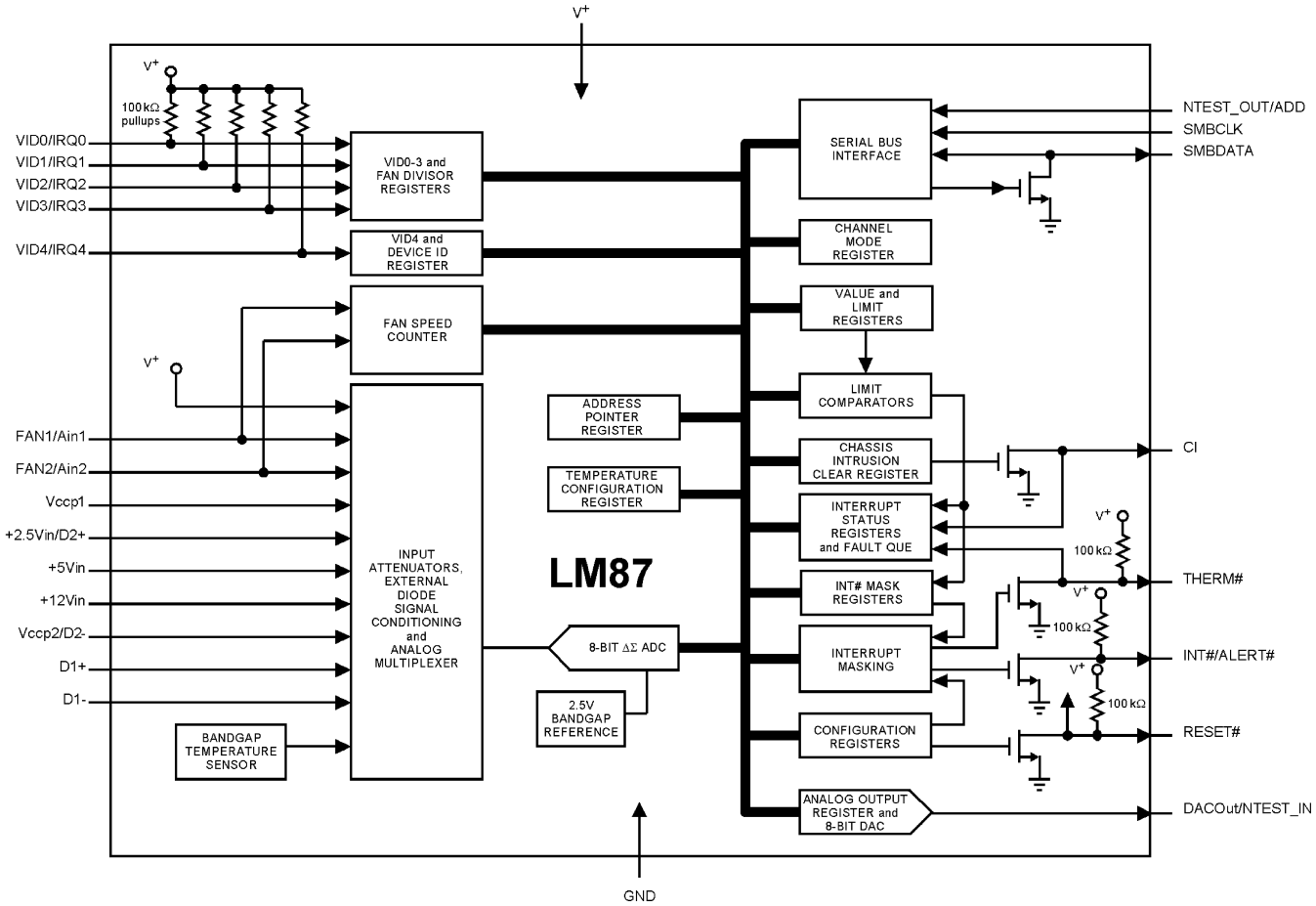

Copyright © 2000–2013, Texas Instruments Incorporated

PIN DESCRIPTIONS (1)

Pin Name(s)	Pin Number	Number of Pins	Type	Description
ADD/NTEST_OUT	1	1	Digital I/0	This pin normally functions as a three-state input that controls the two LSBs of the Serial Bus Address. When this pin is tied to V_{CC} the two LSBs are 01. When tied to Ground, the two LSBs are 10. If this pin is not connected, the two LSBs are 00. This pin also functions as an output during NAND Tree tests (board-level connectivity testing). To ensure proper NAND tree function, this pin should not be tied directly to V_{CC} or Ground. Instead, a series 5 kΩ resistor should be used to allow the test output function to work. Refer to NAND TREE TESTS on NAND Tree testing.
THERM#	2	1	Digital I/O	This pin functions as an open-drain interrupt output for temperature interrupts only, or as an interrupt input for fan control. It has an on-chip 100 kΩ pullup resistor.
SMBData	3	1	Digital I/O	Serial Bus bidirectional Data. Open-drain output.
SMBCLK	4	1	Digital Input	Serial Bus Clock.
FAN1/AIN1-FAN2/AIN2	5-6	2	Analog/Digital Inputs	Programmable as analog inputs (0 to 2.5V) or digital Schmitt Trigger fan tachometer inputs.
CI	7	1	Digital I/O	An active high input from an external circuit which latches a Chassis Intrusion event. This line can go high without any clamping action regardless of the powered state of the LM87. There is also an internal open-drain output on this line, controlled by Bit 7 of the CI Clear Register (46h), to provide a minimum 20 ms pulse.
GND	8	1	GROUND	The system ground pin. Internally connected to all circuitry. The ground reference for all analog inputs and the DAC output. This pin needs to be connected to a low noise analog ground plane for optimum performance of the DAC output.
V^+ (+2.8 V to +3.8 V)	9	1	POWER	+3.3 VV^+ power. Bypass with the parallel combination of 10 µF (electrolytic or tantalum) and 0.1 µF (ceramic) bypass capacitors.
INT# /ALERT#	10	1	Digital Output	Interrupt active low open-drain output. This output is enabled when Bit 1 in the Configuration Register is set to 1. The default state is disabled. It has an on-chip 100 kΩ pullup resistor. Alternately used as an active low output to signal SMBus Alert Response Protocol.
DACOut/NTEST_IN	11	1	Analog Output/Digital Input	0 V to +2.5 V amplitude 8-bit DAC output. When forced high on power up by an external voltage the NAND Tree Test mode is enabled which provides board-level connectivity testing.
RESET#	12	1	Digital I/O	Master Reset, 5 mA driver (open-drain), active low output with a 20 ms minimum pulse width. Available when enabled via Bit 4 in the Configuration register. It also acts as an active low power on RESET input. It has an on-chip 100 kΩ pullup resistor.
D1−	13	1	Analog Input	Analog input for monitoring the cathode of the first external temperature sensing diode.
D1+	14	1	Analog Input	Analog input for monitoring the anode of the first external temperature sensing diode.
+12Vin	15	1	Analog Input	Analog input for monitoring +12 V.
+5Vin	16	1	Analog Input	Analog input for monitoring +5 V.
Vccp2/D2−	17	1	Analog Input	Digitally programmable analog input for monitoring Vccp2 (0 to 3.6 V input range) or the cathode of the second external temperature sensing diode.
+2.5Vin/D2+	18	1	Analog Input	Digitally programmable analog input for monitoring +2.5 V or the anode of the second external temperature sensing diode.
Vccp1	19	1	Analog Input	Analog input (0 to 3.6 V input range) for monitoring Vccp1, the core voltage of processore 1.
VID4/IRQ4-VID0/IRQ0	20-24	5	Digital Inputs	Digitally programmable dual function digital inputs. Can be programmed to monitor the VID pins of the Pentium/PRO and Pentium II processors, that indicate the operating voltage of the processor, or as interrupt inputs. The values are read in the VID/Fan Divisor Register and the VID4 Register. These inputs have on-chip 100 kΩ pullup resistors.
TOTAL PINS		**24**		

(1) # Indicates Active Low (“Not”)

Copyright © 2000–2013, Texas Instruments Incorporated

These devices have limited built-in ESD protection. The leads should be shorted together or the device placed in conductive foam during storage or handling to prevent electrostatic damage to the MOS gates.

Absolute Maximum Ratings [1][2][3][4]

Positive Supply Voltage (V^+)		+6.0 V
Voltage on Any Input or Output Pin:		
+12Vin		−0.3 V to +16 V
ADD/NTESTOUT, DACOut/NTEST_IN, AIN1, AIN2		−0.3 V to (V^++ 0.3 V)
All other pins		−0.3 V to +6 V
Input Current at any Pin [5]		±5 mA
Package Input Current [5]		±20 mA
Maximum Junction Temperature (T_J max)		150 °C
ESD Susceptibility [6]	Human Body Model	2500 V
	Machine Model	150V
Storage Temperature		−65 °C to +150 °C
For soldering specifications:		
See product folder at www.ti.com and http://www.ti.com/lit/SNOA549		

(1) All voltages are measured with respect to GND, unless otherwise specified.
(2) Absolute Maximum Ratings indicate limits beyond which damage to the device may occur. Operating Ratings indicate conditions for which the device is functional, but do not ensure specific performance limits. For ensured specifications and test conditions, see the Electrical Characteristics. The ensured specifications apply only for the test conditions listed. Some performance characteristics may degrade when the device is not operated under the listed test conditions.
(3) The Absolute maximum input range for: **+2.5Vin** - −0.3 V to (1.4 × V^+ + 0.42 V or 6 V, whichever is smaller **+3.3Vin** - −0.3 V to (1.8 × V^+ + 0.55 V or 6 V, whichever is smaller.
(4) If Military/Aerospace specified devices are required, please contact the Texas Instruments Sales Office/Distributors for availability and specifications.
(5) When the input voltage (V_{IN}) at any pin exceeds the power supplies (V_{IN}< GND or V_{IN}>V^+), the current at that pin should be limited to 5 mA. The 20 mA maximum package input current rating limits the number of pins that can safely exceed the power supplies with an input current of 5 mA to four.
(6) The human body model is a 100 pF capacitor discharged through a 1.5 kΩ resistor into each pin.

Operating Ratings [1][2]

Operating Temperature Range	$T_{MIN} \le T_A \le T_{MAX}$
LM87	−40 °C ≤ T_A ≤ +125 °C
Specified Temperature Range	$T_{MIN} \le T_A \le T_{MAX}$
LM87	−40 °C ≤ T_A ≤ +125 °C
Junction to Ambient Thermal Resistance (θ_{JA} [3])	
Package Number: PW0024A	95 °C/W
Supply Voltage (V^+)	+2.8 V to +3.8 V
V_{IN} Voltage Range:	
+12Vin	−0.05 V to +15 V
+5Vin	−0.05 V to +6.0 V
+3.3Vin	−0.05 V to +4.6 V
+2.5Vin	−0.05 V to +3.6 V
VID0 - VID4, Vccp, FAN1, FAN2, SMBCLK, SMBDATA	−0.05 V to +6.0 V
All other inputs	−0.05 V to (V^++ 0.05 V)

(1) Absolute Maximum Ratings indicate limits beyond which damage to the device may occur. Operating Ratings indicate conditions for which the device is functional, but do not ensure specific performance limits. For ensured specifications and test conditions, see the Electrical Characteristics. The ensured specifications apply only for the test conditions listed. Some performance characteristics may degrade when the device is not operated under the listed test conditions.
(2) All voltages are measured with respect to GND, unless otherwise specified.
(3) The maximum power dissipation must be derated at elevated temperatures and is dictated by $T_J$max, θ_{JA} and the ambient temperature, T_A. The maximum allowable power dissipation at any temperature is $P_D = (T_J max - T_A)/\theta_{JA}$.

Copyright © 2000–2013, Texas Instruments Incorporated

DC Electrical Characteristics

The following specifications apply for +2.8 V_{DC} ≤ V^+ ≤ +3.8 V_{DC}, Analog voltage inputs R_S = 510 Ω, unless otherwise specified. **Boldface limits apply for T_A = T_J = T_{MIN} to T_{MAX};** all other limits T_A = T_J = 25 °C.(1)

Symbol	Parameter		Conditions	Typical (2)	Limits (3)	Units (Limits)
POWER SUPPLY CHARACTERISTICS						
I^+	Supply Current		Normal Mode, Interface Inactive	0.7	**2.0**	mA (max)
			Shutdown Mode	0.5		mA
TEMPERATURE-TO-DIGITAL CONVERTER CHARACTERISTICS						
	Temperature Error using Internal Diode			±3		°C
	Temperature Error using Remote Pentium Diode Sensor (4) and (5)		0 °C ≤ T_A ≤ +125 °C, Vcc = 3.3 Vdc		**±3**	°C (max)
	Temperature Error using Remote 2N3904 Sensor (4) and (5)		−40 °C ≤ T_A ≤ +125 °C, Vcc = 3.3 Vdc		**±4**	°C (max)
	Resolution	8 bits			**1.0**	°C (min)
LM87 ANALOG-TO-DIGITAL CONVERTER CHARACTERISTICS						
	Resolution			8		bits
TUE	Total Unadjusted Error		(6)		**±2**	% (max)
DNL	Differential Non-Linearity				**±1**	LSB (max)
t_C	Total Monitoring Cycle Time		(7)	0.28		sec
ADC INPUT CHARACTERISTICS						
	Input Resistance (All analog inputs except AIN1 and AIN2)			130	**90**	kΩ (min)
	AIN1 and AIN2 DC Input Current				**12**	µA
DAC CHARACTERISTICS						
	Resolution			8		Bits
	DAC Error		0 °C ≤ T_A ≤ +75 °C, V^+ = 3.3 V, Code = 255		**-3.3**	% (min)
			V^+ = 3.3 V, 3/4 Scale, code 192	+3.7		%
			0 °C ≤ T_A ≤ +75 °C, V, V^+ = 3.3 V, Code = 8(8)		**±3**	% (max)
R_L	Output Load Resistance		V_O = 2.5 V		**1250**	Ω (min)
C_L	Output Load Capacitance				**20**	pF (max)

(1) Parasitics and or ESD protection circuitry are shown in Figure 2 for the LM87's pins. The nominal breakdown voltage of the zener D3 is 6.5 V. Care should be taken not to forward bias the parasitic diode, D1, present on pins: A0/NTEST_OUT, A1 and DACOut/NTEST_IN. Doing so by more than 50 mV may corrupt a temperature or voltage measurement.
(2) Typicals are at T_J = T_A = 25 °C and represent most likely parametric norm.
(3) Limits are specified to TI's AOQL (Average Outgoing Quality Level).
(4) The Temperature Error specification does not include an additional error of ±1°C, caused by the quantization error.
(5) The Temperature Error will vary less than ±1°C over the operating Vcc range of 2.8V to 3.8V.
(6) TUE (Total Unadjusted Error) includes Offset, Gain and Linearity errors of the ADC.
(7) Total Monitoring Cycle Time includes all diode checks, temperature conversions and analog input voltage conversions. Fan tachometer readings are determined separately and do not affect the completion of the monitoring cycle.
(8) This is the lowest DAC code specified to give a non-zero DAC output.

Copyright © 2000–2013, Texas Instruments Incorporated

DC Electrical Characteristics (continued)

The following specifications apply for +2.8 V_{DC} ≤ V^+ ≤ +3.8 V_{DC}, Analog voltage inputs R_S = 510 Ω, unless otherwise specified. **Boldface limits apply for $T_A = T_J = T_{MIN}$ to T_{MAX};** all other limits $T_A = T_J$ = 25 °C.(1)

Symbol	Parameter	Conditions	Typical (2)	Limits (3)	Units (Limits)
FAN RPM-TO-DIGITAL CONVERTER					
	Fan RPM Error	+25 °C ≤ T_A ≤ +75 °C		**±10**	% (max)
		−10 °C ≤ T_A ≤ +100 °C		**±15**	% (max)
		−40 °C ≤ T_A ≤ +125 °C		**±20**	% (max)
	Full-scale Count			**255**	(max)
	FAN1 and FAN2 Nominal Input RPM (See FAN INPUTS)	Divisor = 1, Fan Count = 153 (9)	8800		RPM
		Divisor = 2, Fan Count = 153 (9)	4400		RPM
		Divisor = 3, Fan Count = 153 (9)	2200		RPM
		Divisor = 4, Fan Count = 153 (9)	1100		RPM
DIGITAL OUTPUTS (NTEST_OUT)					
$V_{OUT(1)}$	Logical “1” Output Voltage	I_{OUT} = ±3.0 mA at V^+ = +2.8 V		**2.4**	V (min)
$V_{OUT(0)}$	Logical “0” Output Voltage	I_{OUT} = ±3.0 mA at V^+ = +3.8 V		**0.4**	V (max)
OPEN- DRAIN DIGITAL OUTPUTS (SMBData, RESET#, CI, INT#, THERM#)					
$V_{OUT(0)}$	Logical “0” Output Voltage (SMBData)	I_{OUT} = −755 µA		**0.4**	V (min)
$V_{OUT(0)}$	Logical “0” Output Voltage (Others)	I_{OUT} = −3 mA		**0.4**	V (min)
I_{OH}	High Level Output Current	$V_{OUT} = V^+$	5	**12**	µA (max)
	RESET# and Chassis Intrusion		45	**20**	ms (min)
	Pulse Width				
DIGITAL INPUTS: VID0–VID4, NTEST_IN, ADD/NTEST_OUT, Chassis Intrusion (CI)					
$V_{IN(1)}$	Logical “1” Input Voltage			**2.0**	V (min)
$V_{IN(0)}$	Logical “0” Input Voltage			**0.8**	V (max)
SMBus DIGITAL INPUTS (SMBCLK, SMBData)					
$V_{IN(1)}$	Logical “1” Input Voltage			**2.1**	V (min)
$V_{IN(0)}$	Logical “0” Input Voltage			**0.8**	V (max)
V_{HYST}	Input Hysteresis Voltage		243		mV
Tach Pulse Logic Inputs (FAN1, FAN2)					
$V_{IN(1)}$	Logical “1” Input Voltage			**0.7 × V^+**	V (min)
$V_{IN(0)}$	Logical “0” Input Voltage			**0.3 × V^+**	V (max)
ALL DIGITAL INPUTS					
$I_{IN(1)}$	Logical “1” Input Current	$V_{IN} = V^+$		**−12**	µA (min)
$I_{IN(0)}$	Logical “0” Input Current	V_{IN} = 0 V_{DC}		**12**	µA (max)
C_{IN}	Digital Input Capacitance		20		pF

(9) The total fan count is based on 2 pulses per revolution of the fan tachometer output.

Copyright © 2000–2013, Texas Instruments Incorporated

AC Electrical Characteristics

The following specifications apply for +2.8 V_{DC} ≤V^+ ≤ +3.8 V_{DC} on SMBCLK and SMBData, unless otherwise specified. **Boldface limits apply for $T_A = T_J = T_{MIN}$ to T_{MAX};** all other limits $T_A = T_J$ = 25°C. (1)

Symbol	Parameter	Conditions	Typical (2)	Limits (3)	Units (Limits)
SERIAL BUS TIMING CHARACTERISTICS					
t_1	SMBCLK (Clock) Period			**2.5**	µs (min)
t_{rise}	SMBCLK and SMBData Rise Time			**1**	µs (max)
t_{fall}	SMBCLK and SMBData Fall Time			**300**	ns (max)
t_2	Data In Setup Time to SMBCLK High			**100**	ns (min)
t_3	Data Out Stable After SMBCLK Low			**100**	ns (min)
				300	ns (max)
t_4	SMBData Low Setup Time to SMBCLK Low (start)			**100**	ns (min)
t_5	SMBData High Hold Time After SMBCLK High (stop)			**100**	ns (min)
$t_{TIMEOUT}$	SMBCLK low time required to reset the Serial Bus Interface to the Idle State		31	**25** **35**	ms ms (min) ms (max)
C_L	Capacitive Load on SMBCLK and SMBData			**80**	pF (max)

(1) Timing specifications are tested at the specified logic levels, V_{IL} for a falling edge and V_{IH} for a rising edge.
(2) Typicals are at $T_J = T_A$ = 25 °C and represent most likely parametric norm.
(3) Limits are specified to TI's AOQL (Average Outgoing Quality Level).

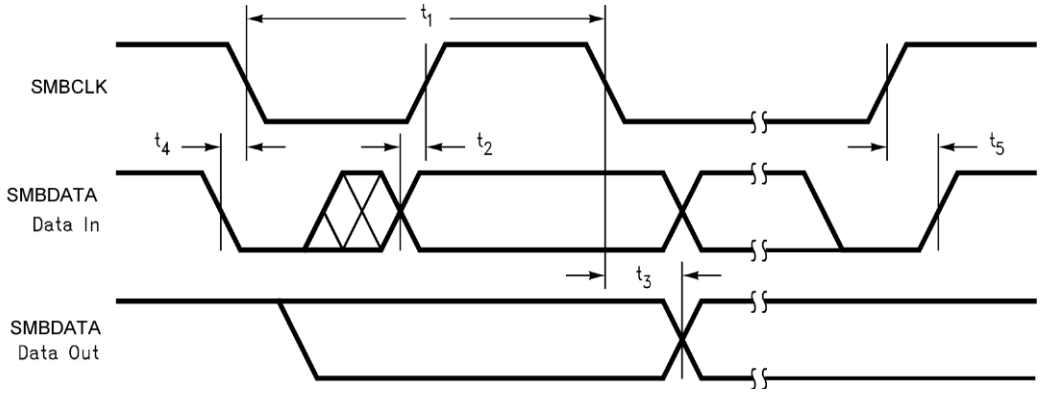

Figure 1. Serial Bus Timing Diagram

Pin Name	D1	D2	D3	R1	R2	R3	R4		Pin Name	D1	D2	D3	R1	R2	R3	R4
INT#	x(1)	x	x	0	∞	100 k	1M		+12Vin	x	x		R1+R2 ≈130k		∞	
CI	x	x	x	0	∞	∞	1M		+5Vin	x	x		R1+R2 ≈130k		∞	
FAN1–FAN2	x	x	x	0	∞	∞	1M		+3.3Vin, +2.5Vin, Vccp1, Vccp2	x	x	x	R1+R2 ≈130k		∞	1M
SMBCLK	x	x	x	0	∞	∞	1M		THERM	x	x	x	0	∞	100 k	1M
SMBData	x	x	x	0	∞	∞	1M		VID4–VID0	x	x	x	0	∞	100 k	1M
RESET#	x	x	x	0	∞	100 k	1M		DACOut/NTEST_IN	x	x	x	0	∞	∞	1M
ADD/NTEST_OUT	x	x	x	0	∞	∞	1M									

(1) An x indicates that the diode exists.

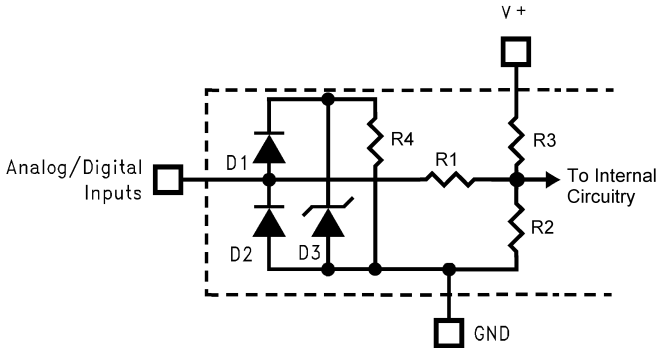

Figure 2. ESD Protection Input Structure

Test Circuit

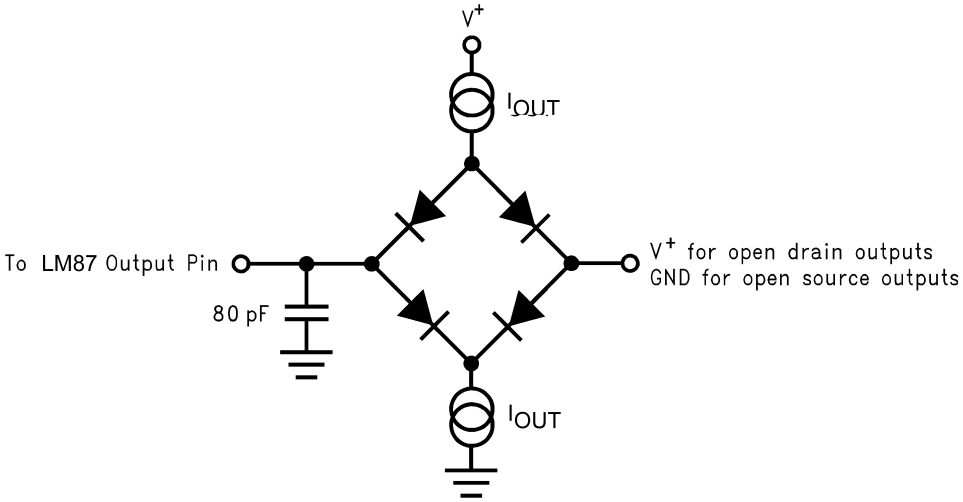

Figure 3. Digital Output Load Test Circuitry

Copyright © 2000–2013, Texas Instruments Incorporated

Typical Performance Characteristics

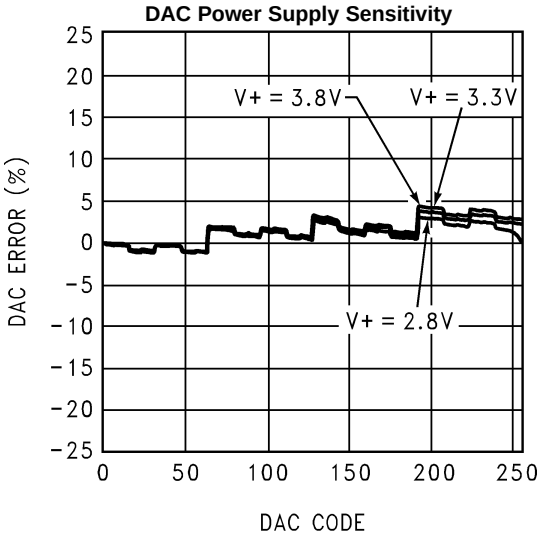

Figure 4.

FUNCTIONAL DESCRIPTION

GENERAL DESCRIPTION

The LM87 provides 7 analog inputs, an internal junction type temperature sensor, two remote junction temperature sensing channels, a Delta-Sigma ADC (Analog-to-Digital Converter), a DAC output, 2 fan speed counters, WATCHDOG registers, and a variety of inputs and outputs on a single chip. A two wire SMBus™ Serial Bus interface is included. The LM87 performs power supply, temperature, fan control and fan monitoring for personal computers.

The analog inputs are useful for monitoring several power supplies present in a typical computer. The LM87 includes internal resistor dividers that scale external Vccp1, Vccp2, +2.5V, +5.0 V, +12 V and internal +3.3V power supply voltages to a 3/4 scale nominal ADC output. Two additional inputs, +AIN1 and +AIN2 (2.5V full scale) are input directly with no resistive dividers. The LM87 ADC continuously converts the scaled inputs to 8-bit digital words. Measurement of negative voltages (such as -5 V and -12 V power supplies) can be accommodated with an external resistor divider applied to the +AIN1 or +AIN2 inputs. Internal and external temperature is converted to 8-bit two's-complement digital words with a 1 °C LSB.

Fan inputs measure the period of tachometer pulses from the fans, providing a higher count for lower fan speeds. The fan inputs are Schmitt-Trigger digital inputs with an acceptable range of 0 V to V^+ and a transition level of approximately $V^+/2$. Full scale fan counts are 255 (8-bit counter) and this represents a stopped or very slow fan. Nominal speeds, based on a count of 153, are programmable from 1100 to 8800 RPM on FAN1 and FAN2. Schmitt-Trigger input circuitry is included to accommodate slow rise and fall times. An 8 bit DAC with 0 V to 2.5 V output voltage range can be used for control of fan speed.

The LM87 has several internal registers, as shown in Figure 5, Table 1 and REGISTERS AND RAM. These include:

- **Configuration Registers:** Provide control and configuration.
- **Channel Mode Register:** Controls the functionality of the dual purpose input pins, scaling for internal Vcc measurement, and operation of some IRQ inputs.
- **Interrupt Status Registers:** Two registers to provide status of each WATCHDOG limit or Interrupt event. Reading the Status Registers clears any active bits.
- **Interrupt Status Mirror Registers:** Two registers to provide status of each WATCHDOG limit or Interrupt event. Reading the Mirror Registers does not affect the status bits.
- **Interrupt Mask Registers:** Allows masking of individual Interrupt sources, as well as separate masking for each of the two hardware Interrupt outputs.
- **CI Clear Register:** Allows transmitting a 20 ms (minimum) low pulse on the chassis intrusion pin (CI).
- **VID/Fan Divisor Register:** This register contains the state of the VID0-VID3 input lines and the divisor bits for FAN1 and FAN2 inputs.
- **VID4 Register:** Contains the state of the VID4 input.
- **Extended Mode Register:** Enable and control the Alert Response operation.
- **Hardware High Limit Registers:** Registers at 13h, 14h, 17h and 18h where Internal and External 'Hardware' WATCHDOG temperature high limits are stored. These limits have Power On Default settings but can be adjusted by the user. The values stored at 13h and 14h can be locked down by setting bits 1 and 2 of Configuration Register 2.
- **Value and Limit RAM:** The DAC digital output, monitoring results (temperature, voltages, fan counts), WATCHDOG limits, and Company/Stepping IDs are all contained in the Value RAM. The Value RAM consists of a total of 33 bytes, addresses 19h - 3Fh, containing:
  - byte 1 at address 19h contains the DAC Data Register
  - locations 1Ah and 1Bh contain the WATCHDOG low limits for AIN1 and AIN2
  - locations 1Ch - 1Fh are unassigned and do not have associated registers
  - the next 10 bytes at addresses 20h -29h contain all of the results
  - location 2Ah is unassigned and does not have an associated register
  - the next 18 bytes at addresses 2Bh-3Ch are the remaining WATCHDOG limits
  - the last 2 bytes at addresses 3Eh and 3Fh contain the Company ID and Stepping ID numbers, respectively

Copyright © 2000–2013, Texas Instruments Incorporated

When the LM87 is started, it cycles through each measurement in sequence, and it continuously loops through the sequence approximately once every 0.4 s. Each measured value is compared to values stored in WATCHDOG, or Hardware High Limit registers. When the measured value violates the programmed limit the LM87 will set a corresponding Interrupt in the Interrupt Status Registers. The hardware Interrupt line INT# is fully programmable with separate masking of each Interrupt source. In addition, the Configuration Register has a control bit to enable or disable the hardware Interrupt. Another hardware Interrupt line available, THERM# is used to signal temperature specific events. Having a dedicated interrupt for these conditions allows specific actions to be taken for thermal events. This output is enabled by setting bit 2 of Configuration Register 1.

The Chassis Intrusion input is designed to accept an active high signal from an external circuit that activates and latches when the case is removed from the computer.

INTERFACE

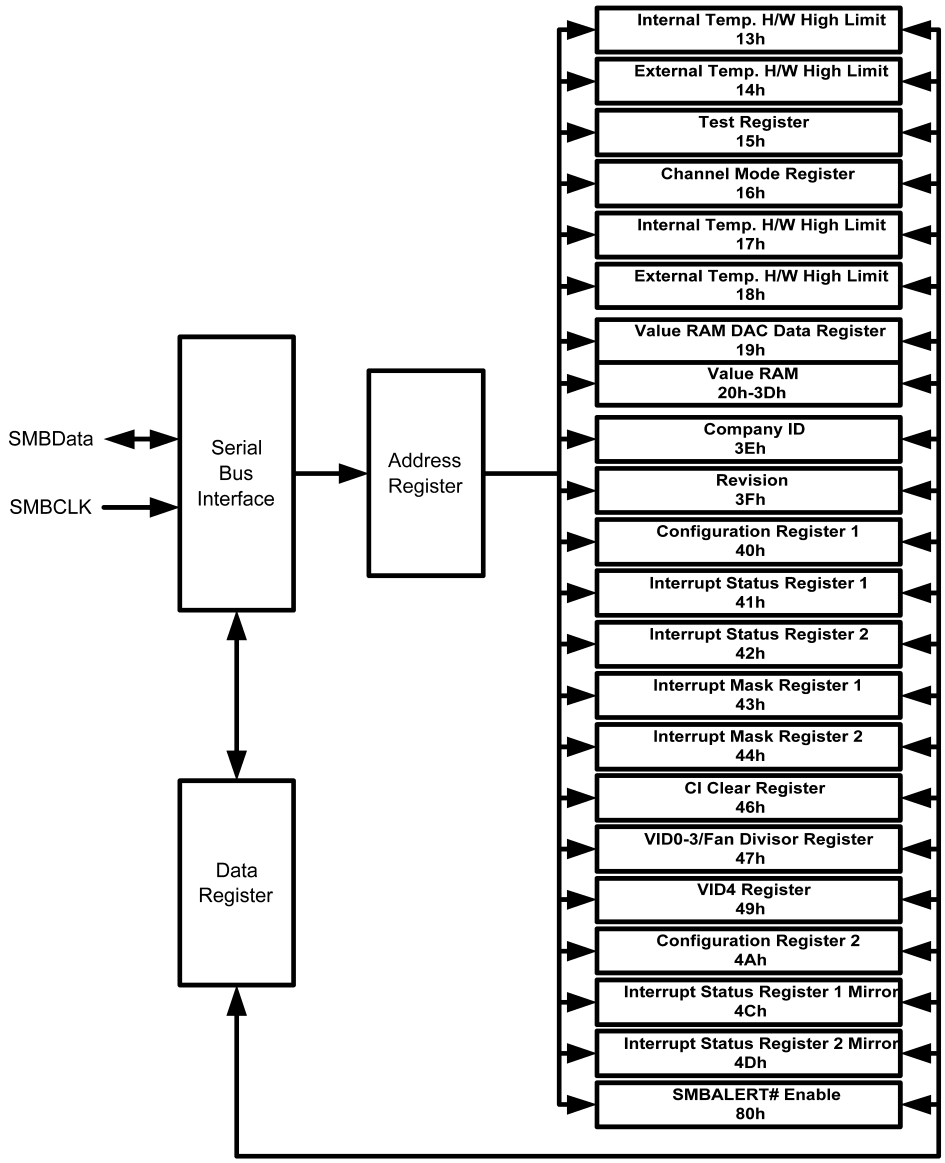

Figure 5. LM87 Register Structure

Internal Registers of the LM87

Table 1. The internal registers and their corresponding internal LM87 addresses are as follows:

Register	LM87 Internal Hex Address	Power on Value	Notes
Internal Temp. Hardware High Limit	13h	0100 0110	70 °C Default - User adjustable. Lockable by setting bit 1 of register 4Ah.
External Temp. Hardware High Limit	14h	0101 0101	85 °C Default - User adjustable. Lockable by setting bit 2 of register 4Ah.
Test Register	15h	0000 0000	
Channel Mode Register	16h	0000 0000	
Internal Temp. Hardware High Limit	17h	0100 0110	70 °C Default - User adjustable.
External Temp. Hardware High Limit	18h	0101 0101	85 °C Default - User adjustable.
Value RAM DAC Data Register	19h	1111 1111	Defaults to full scale DAC setting.
Value RAM	1Ah-3Fh		(See Value RAM—Address 19h–3Fh) Contains: monitoring results (temperature, voltages, fan counts), WATCHDOG limits, and Company/Stepping IDs
Company ID	3Eh	0000 0010	This designates the Texas Instruments LM87.
Revision	3Fh	0000 0110	Revisions of this device will start with 1 and increment by one.
Configuration Register 1	40h	0000 1000	
Interrupt Status Register 1	41h	0000 0000	
Interrupt Status Register 2	42h	0000 0000	
Interrupt Mask Register 1	43h	0000 0000	
Interrupt Mask Register 2	44h	0000 0000	
CI Clear Register	46h	0000 0000	
VID0-3/Fan Divisor Register	47h	0101 XXXX	The upper four bits set the divisor for Fan Counters 1 and 2. The lower four bits reflect the state of the VID0-VID3 inputs.
VID4 Register	49h	1000 000X	The lower bit reflects the state of VID4 input.
Configuration Register 2	4Ah	0000 0000	
Interrupt Status Register 1 Mirror	4Ch	0000 0000	
Interrupt Status Register 2 Mirror	4Dh	0000 0000	
SMBALERT# Enable	80h	0010 0000	

Copyright © 2000–2013, Texas Instruments Incorporated

Serial Bus Interface

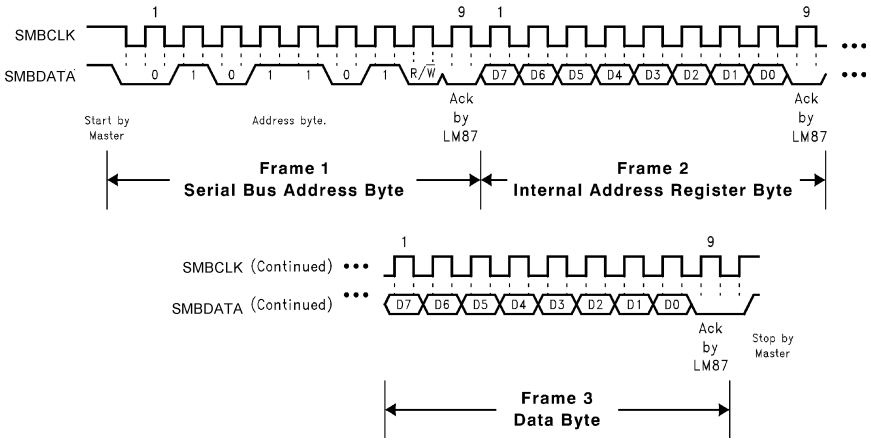

Figure 6. (a) Serial Bus Write to the Internal Address Register followed by the Data Byte

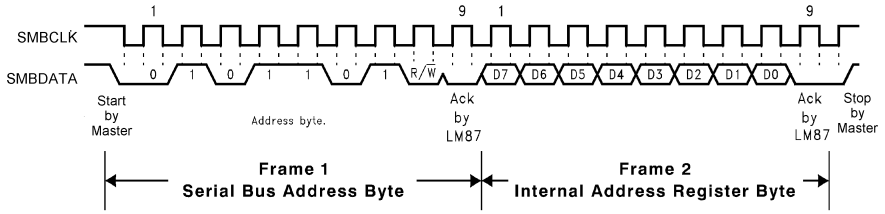

Figure 7. (b) Serial Bus Write to the Internal Address Register Only

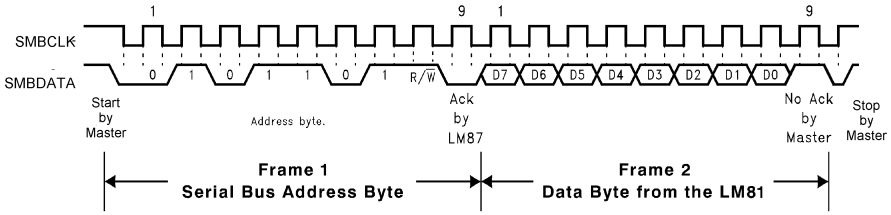

Figure 8. (c) Serial Bus Read from a Register with the Internal Address Register Preset to Desired Location

The Serial Bus control lines consist of the SMBData (serial data), SMBCLK (serial clock) and ADD (address) pin. The LM87 can operate only as a slave. The SMBCLK line only controls the serial interface, all other clock functions within LM87 such as the ADC and fan counters are done with a separate asynchronous internal clock.

When using the Serial Bus Interface, a write will always consist of the LM87 Serial Bus Interface Address byte, followed by the Internal Address Register byte, then the data byte. There are two cases for a read:

1. If the Internal Address Register is known to already be at the desired Address, simply read the LM87 with the Serial Bus Interface Address byte, followed by the data byte read from the LM87.
2. If the Internal Address Register value is unknown, or if it is not the desired value, write to the LM87 with the Serial Bus Interface Address byte, followed by the Internal Address Register byte. Then restart the Serial Communication with a Read consisting of the Serial Bus Interface Address byte, followed by the data byte read from the LM87.

The Serial Bus address of the LM87 is set to 010 11(X)(Y). All bits, except for X and Y, are fixed and cannot be changed. The values for X and Y are set by the state of the ADD pin on power up. If ADD is tied to ground the value for XY is 10. If ADD is tied to Vcc XY will be set to 01. If ADD is not connected, XY will be 00. XY = 11 is not a possible combination.

Copyright © 2000–2013, Texas Instruments Incorporated

All of these communications are depicted in the Serial Bus Interface Timing Diagrams as shown in Figure 8. The example shown corresponds to the ADD pin tied to Vcc, so XY=01 and the resulting LM87 address is 0101101.

Serial Bus Timeout can be initiated by holding the SMBCLK line low for greater than $t_{TIMEOUT}$ (35 ms max). Serial Bus Timeout resets the serial bus interface circuitry to the idle state and readies the LM87 for a new serial bus communication.

USING THE LM87

Power On

When power is first applied, the LM87 performs a “power on reset” on several of its registers. The power on condition of the LM87's registers is shown in Table 1 Registers whose power on values are not shown have power on conditions that are indeterminate (this includes the value RAM ,exclusive of the DAC data, and WATCHDOG limits). When power is first applied the ADC is inactive. In most applications, the first action after power on is to write WATCHDOG limits into the Value RAM.

Resets

All register values, except the Programmed DAC Output can be returned to their "power on" default values by taking the RESET# input low for at least TBD ns or by performing a Configuration Register INITIALIZATION. The Value RAM conversion results, and Value RAM WATCHDOG limits are not Reset and will be indeterminate immediately after power on. If the Value RAM contains valid conversion results and/or Value RAM WATCHDOG limits have been previously set, they will not be affected by a Configuration Register INITIALIZATION. The Power On Reset, RESET# input, and Configuration Register INITIALIZATION, clear or initialize the following registers (the initialized values are shown on Table I). Power On Reset also sets the Programmed DAC Output to full scale (FFh) Hardware High Limit registers 13h, and 14h will only be returned to default values if the "Write Once" bits in Configuration Register 2 have not been set:

- Configuration Registers 1 and 2
- Channel Mode Register
- Hardware High Limit Registers
- Interrupt Status Register 1
- Interrupt Status Register 2
- Interrupt Status Mirror Register 1
- Interrupt Status Mirror Register 2
- Interrupt Mask Register 1
- Interrupt Mask Register 2
- Chassis Intrusion Clear Register
- VID/Fan Divisor Register
- VID4 Register
- Extended Mode Register

Configuration Register INITIALIZATION is accomplished by setting Bit 7 of Configuration Register 1 high. This bit automatically clears after being set.

Configuration Registers and Channel Mode Register

The Configuration Registers and Channel Mode Register control the LM87 operation. At power on, the ADC is stopped and INT_Clear is asserted, clearing the INT# hardwire output. These registers start and stop the LM87, enable and disable interrupt output, configure the operation of dual function inputs, and provide the Reset functions described in Resets.

Bit 0 of Configuration Register 1 controls the monitoring loop of the LM87. Setting Bit 0 low stops the LM87 monitoring loop and puts the LM87 in shutdown mode, reducing power consumption. Serial Bus communication can take place with any register in the LM87 although activity on the SMBData and SMBCLK lines will increase shutdown current, up to as much as maximum rated supply current, while the activity takes place. Taking Bit 0 high starts the monitoring loop, described in more detail subsequently.

Bit 1 of Configuration Register 1 enables the INT# Interrupt output when this bit is taken high.

 Copyright © 2000–2013, Texas Instruments Incorporated

Bit 2 of Configuration Register 1 enables the THERM# Interrupt output when this bit is taken high.

Bit 3 of Configuration Register 1 clears the INT# output when set high, without affecting the contents of the Interrupt Status Registers. The LM87 will stop monitoring. It will resume upon clearing of this bit.

Bit 4 of Configuration Register 1 provides an active low 20 ms (minimum) pulse at the RESET# output when set high.

Bit 6 of Configuration Register 1 clears the THERM# output when set high, without affecting the contents of the Interrupt Status Registers.

Bit 7 of Configuration Register 1 (the INITIALIZATION bit) resets the internal registers of the LM87 as described in Resets.

Bit 7 of the CI_Clear Register provides an active low 20 ms (minimum) pulse at the CI# output pin when set high. This is intended for resetting the Chassis Intrusion circuitry.

Bit 0 of Configuration Register 2 enables the INT# Interrupt output for THERM# events when set low. When this bit is set high, THERM# error events will not affect the INT# output.

Bit 1 of Configuration Register 2 locks the value set in the Internal Temperature high limit register at 13h. The value cannot be changed until a Power On Reset is performed.

Bit 2 of Configuration Register 2 locks the value set in the External Temperature high limit register at 14h. The value cannot be changed until a Power On Reset is performed.

Bit 3 of Configuration Register 2 sets the THERM# output mode. When set to 0, the THERM# output functions in default mode, when set to 1, THERM# operates in ACPI mode.

Bit 6 of Configuration Register 2, when set to 1, enables pin 21 as an active high (IRQ3) interrupt input. When set to 0, this input is disabled as an IRQ interrupt.

Bit 7 of Configuration Register 2, when set to 1, enables pin 20 as an active high (IRQ4) interrupt input. When set to 0, this input is disabled as an IRQ interrupt.

Bit 0 of the Channel Mode Register, when set to 1, configures pin 5 as AIN1. When set to 0, pin 5 is configured as the FAN1 input.

Bit 1 of the Channel Mode Register, when set to 1, configures pin 6 as AIN2. When set to 0, pin 6 is configured as the FAN2 input.

Bit 2 of the Channel Mode Register, when set to 0, configures pins 18 and 19 as +2.5V and V_{CCP2} voltage inputs. When set to 1, pins 18 and 19 are configured as a second remote temperature sensing channel.

Bit 3 of the Channel Mode Register, when set to 0, sets the nominal voltage for internal V_{CC} measurement to 3.3V. When set to 1, the nominal V_{CC} range is 5V.

Bit 4 of the Channel Mode Register, when set to 1, enables pin 24 as an active low (IRQ0) interrupt input. When set to 0, this input is disabled as an IRQ interrupt.

Bit 5 of the Channel Mode Register, when set to 1, enables pin 23 as an active low (IRQ1) interrupt input. When set to 0, this input is disabled as an IRQ interrupt.

Bit 6 of the Channel Mode Register, when set to 1, enables pin 22 as an active low (IRQ2) interrupt input. When set to 0, this input is disabled as an IRQ interrupt.

Bit 7 of the Channel Mode Register, when set to 1, configures pins 20 to 24 as interrupt inputs. When set to 0, pins 20 to 24 are configured as processor voltage ID pins.

Copyright © 2000–2013, Texas Instruments Incorporated

Starting Conversions

The monitoring function (Analog inputs, temperature, and fan speeds) in the LM87 is started by writing to Configuration Register 1 and setting INT_Clear (Bit 3) low, and Start (bit 0) high. The LM87 then performs a "round-robin" monitoring of all analog inputs, temperature, and fan speed inputs approximately once every 0.3 s. The sequence of items being monitored is:

1. Check D1 connections
2. Check D2 connections
3. Internal Temperature
4. External D1 Temperature
5. External D2 Temperature
6. +2.5V
7. +Vccp1
8. Vcc 3.3V
9. Vcc 5.0V
10. +5Vin
11. +12Vin
12. +Vccp2
13. AIN1
14. AIN2
15. Fan 1
16. Fan 2

DACOut immediately changes after the DAC Data Register in the Value RAM has been updated. For a zero to full scale transition DACOut will typically settle within 100 µsec of the stop by master in the write to the DAC Data Register Serial Bus transaction. The DAC Data Register is not reset by the INITIALIZATION bit found in the Configuration Register.

Reading Conversion Results

The conversion results are available in the Value RAM. Conversions can be read at any time and will provide the result of the last conversion. Because the ADC stops, and starts a new conversion whenever it is read, reads of any single value should not be done more often than once every 56 ms. When reading all values, allow at least 0.6 seconds between reading groups of values. Reading more frequently than once every 0.6 seconds can also prevent complete updates of Interrupt Status Registers and Interrupt Output's.

A typical sequence of events upon power on of the LM87 would consist of:

1. Set WATCHDOG Limits
2. Set Interrupt Masks
3. Start the LM87 monitoring process

Copyright © 2000–2013, Texas Instruments Incorporated

ANALOG INPUTS

All analog input voltages are digitized to 8-bits of resolution. For safety purposes, and to provide maximum accuracy, a 510 Ω resistor should be placed in series with all analog voltage inputs. The resistors will limit the possible current drawn from the power supplies in the event that circuit board traces are bridged, or accidentally shorted during test. All analog inputs, except for AIN1 and AIN2, include internal resistor attenuators. The theoretical LSB size, theoretical voltage input required for an ADC reading of 192 (3/4 scale) and 255 (full scale) for each analog input is detailed in the table below:

Input	LSB size	Vin for 192	Vin for 255
2.5Vin	13 mV	2.5 V	3.320 V
3.3Vcc	17.2 mV	3.3 V	4.383 V
5Vin/Vcc	26 mV	5 V	6.641 V
12Vin	62.5 mV	12 V	15.93 V
Vccp1, Vccp2	14.1 mV	2.7 V	3.586 V
AIN1/AIN2	9.8 mV	1.875 V	2.49 V

Thus monitoring power supplies within a system can be easily accomplished by tying the Vccp, +2.5Vin, +5Vin and +12Vin analog inputs to the corresponding system supply. Vcc of the LM87 will also be monitored. A digital reading can be converted to a voltage by simply multiplying the decimal value of the reading by the LSB size.

For inputs with attenuators the input impedance is greater than 90 kΩ. AIN inputs do not have resistor attenuators and are directly tied to the ADC, therefore having a much larger input impedance.

A negative power supply voltage can be applied to a AIN input through a resistor divider referenced to a known positive DC voltage as shown in Figure 9. The resistor values shown in the table below for the circuit of Figure 9 will provide approximately 1.25 V at the AIN analog inputs of the LM87 for a nominal reading of 128.

Table 2.

Voltage Measurements (V_S)	R2	R1	V^+	Voltage at Analog Inputs (ADC code 128)
−12V	20 kΩ	130 kΩ	+3.3 V	+1.25 V
−5V	20 kΩ	61.0 kΩ	+3.3 V	+1.25 V

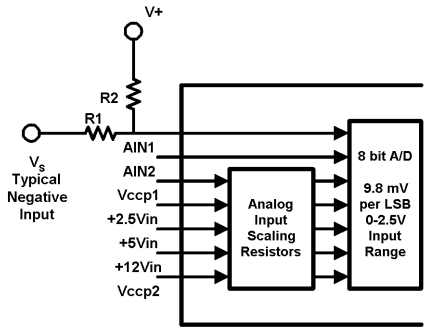

Resistor values shown in Table 2 provide approximately 1.25V at the Vccp inputs.

Figure 9. Input Examples

The resistors were selected by setting R2 = 20 kΩ and then calculating R1 using the following equation, (V_S is the maximum negative input voltage, V^+ is the positive pullup voltage):

$$R1 = [(1.25V - V_S) \div (V^+ - 1.25V)] \times 20\ k\Omega \quad (1)$$

The maximum R1 can be is restricted by the DC input current of an AIN input.

Inputs with internal resistor dividers (+2.5Vin, +3.3Vin or +5Vin, +12Vin) can have voltage applied that exceeds the power supply up to: 3.6 V for +2.5Vin, 4.6 V for +3.3Vin, 6.8 V for +5Vin, and 15 V for +12Vin. The AIN inputs have a parasitic diode to the positive supply, so care should be taken not to forward bias this diode. All analog inputs have internal diodes that clamp the input voltage when going below ground thus limiting the negative analog input voltage range to −50 mV. Violating the analog input voltage range of any analog input has no detrimental effect on the other analog inputs. External resistors should be included to limit input currents to the values given in Absolute Maximum Ratings for Input Current At Any Pin whenever exceeding the analog input voltage range, even on an un-powered LM87. Inputs with external attenuator networks will usually meet these requirements. If it is possible for inputs without attenuators (such as AIN1 and AIN2) to be turned on while LM87 is powered off, additional resistors of about 10 kΩ should be added in series with the inputs to limit the input current.

Analog Input Interrupts

A WATCHDOG window comparison on the analog inputs can activate the INT# interrupt output. A converted input voltage that is above its respective HIGH limit or less than or equal to its LOW limit will cause a flag to be set in its Interrupt Status Register. This flag will activate the INT# output when its mask bit is set low. Mask bits are found in the Interrupt Mask Registers. The Interrupt system is described in much greater detail in WATCHDOG LIMIT COMPARISONS AND INTERRUPT STRUCTURE.

LAYOUT AND GROUNDING

A separate, low-impedance ground plane for analog ground, which provides a ground point for the GND pin, voltage dividers and other analog components, will provide best performance, but is not mandatory. Analog components such as voltage dividers should be located physically as close as possible to the LM87.

The power supply bypass, the parallel combination of 10 µF (electrolytic or tantalum) and 0.1 µF (ceramic) bypass capacitors connected between pin 9 and ground, should also be located as close as possible to the LM87.

FAN INPUTS

The FAN1 and FAN2 inputs accept signals from fans equipped with tachometer outputs. These are logic-level inputs with an approximate threshold of $V^+/2$. Signal conditioning in the LM87 accommodates the slow rise and fall times typical of fan tachometer outputs. The maximum input signal range is 0 to V^+. In the event these inputs are supplied from fan outputs which exceed 0 to V^+, either resistive division or diode clamping must be included to keep inputs within an acceptable range, as shown in Figure 10. R2 is selected so that it does not develop excessive voltage due to input leakage. R1 is selected based on R2 to provide a minimum input of 2 V and a maximum of V^+. R1 should be as low as possible to provide the maximum possible input up to V^+ for best noise immunity. Alternatively, use a shunt reference or zener diode to clamp the input level.

If fans can be powered while the power to the LM87 is off, the LM87 inputs will provide diode clamping. Limit input current to the Input Current at Any Pin specification shown in Absolute Maximum Ratings. In most cases, open collector outputs with pull-up resistors inherently limit this current. If this maximum current could be exceeded, either a larger pull up resistor should be used or resistors connected in series with the fan inputs.

The Fan Inputs gate an internal 22.5 kHz oscillator for one period of the Fan signal into an 8-bit counter (maximum count = 255). The default divisor, located in the VID/Fan Divisor Register, is set to 2 (choices are 1, 2, 4, and 8) providing a nominal count of 153 for a 4400 rpm fan with two pulses per revolution. Typical practice is to consider 70% of normal RPM a fan failure, at which point the count will be 219.

Determine the fan count according to:

$$\text{Count} = \frac{1.35 \times 10^6}{\text{RPM} \times \text{Divisor}} \tag{2}$$

Copyright © 2000–2013, Texas Instruments Incorporated

Note that Fan 1 and Fan 2 Divisors are programmable via the VID/Fan Divisor Register.

Fan tachometer outputs that provide one pulse per revolution should use a divisor setting twice that of outputs that provide two pulses per revolution. For example, a 4400 RPM fan that provides one pulse per revolution should have the divisor set to 4 such that the nominal counter output is 153.

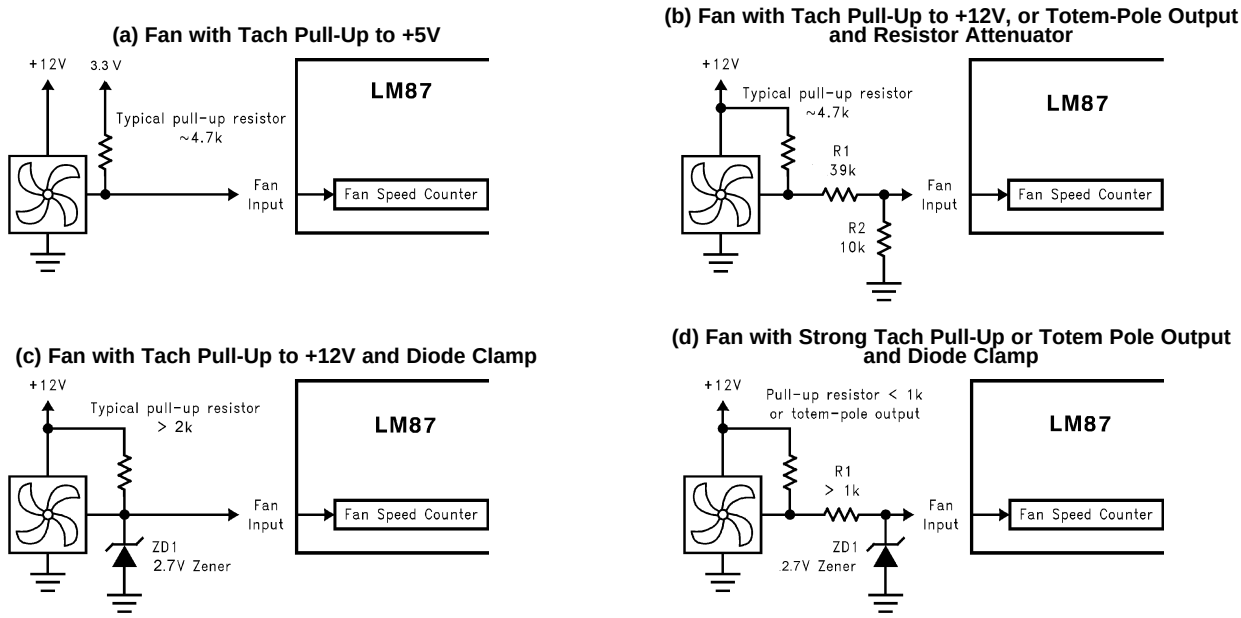

Figure 10. Alternatives for Fan Inputs

Counts are based on 2 pulses per revolution tachometer outputs.

RPM	Time per Revolution	Counts for "Divide by 2"	Comments
		(Default) in Decimal	
4400	13.64 ms	153 counts	Typical RPM
3080	19.48 ms	219 counts	70% RPM
2640	22.73 ms	255 counts	60% RPM
		(maximum counts)	

Mode Select	Nominal RPM	Time per Revolution	Counts for the	70% RPM	Time per Revolution
			Given Speed in Decimal		for 70% RPM
Divide by 1	8800	6.82 ms	153	6160	9.74 ms
Divide by 2	4400	13.64 ms	153	3080	19.48 ms
Divide by 4	2200	27.27 ms	153	1540	38.96 ms
Divide by 8	1100	54.54 ms	153	770	77.92 ms

$$\text{Count} = \frac{1.35 \times 10^6}{\text{RPM} \times \text{Divisor}} \tag{3}$$

DAC OUTPUT

The LM87 provides an 8-bit DAC (Digital-to-Analog Converter) with an output range of 0 to 2.5 volts (9.80 mV LSB). This DAC can be used in any way, but in most applications of the LM87 the DAC will be used for fan control. Typically the DAC output would be amplified to provide the up to 12 volt drive required by the fan. At power-on the DAC provides full output, insuring that full fan speed is the default condition. Care should be taken such that the analog circuitry tied to this pin does not drive this pin above 2.5 V. Doing so will place the LM87 in NAND tree test mode which will make all pins inputs. After the first SMBus communication with the LM87, it will leave NAND tree test mode and all inputs/outputs will function normally.

Copyright © 2000–2013, Texas Instruments Incorporated

Fans do not start reliably at reduced voltages, so operation at a reduced voltage should be preceded by a brief (typically 1 second) excursion to full operating voltage, then reduce the voltage. Most fans do not operate at all below 5 to 7 volts. At those lower voltages the fan will simply consume current, dissipate power, and not operate, and such conditions should be avoided.

The output of the amplifier can be configured to provide a high or low side pass transistor. A high side pass transistor simplifies the coupling of tachometer outputs to the tachometer inputs of the LM87 since the fan remains grounded. Low side drive will require AC coupling along with clamping at the LM87 input to prevent negative excursions.

A typical circuit for fan drive is shown in Figure 16.

TEMPERATURE MEASUREMENT SYSTEM

The LM87 temperature sensor(s) and ADC produce 8-bit two's-complement temperature data. One internal diode junction temperature, and up to two external junction temperatures can be monitored. A digital comparator compares the temperature data to the user-programmable High, Low, and Hardware Limit setpoints, and Hysteresis values.

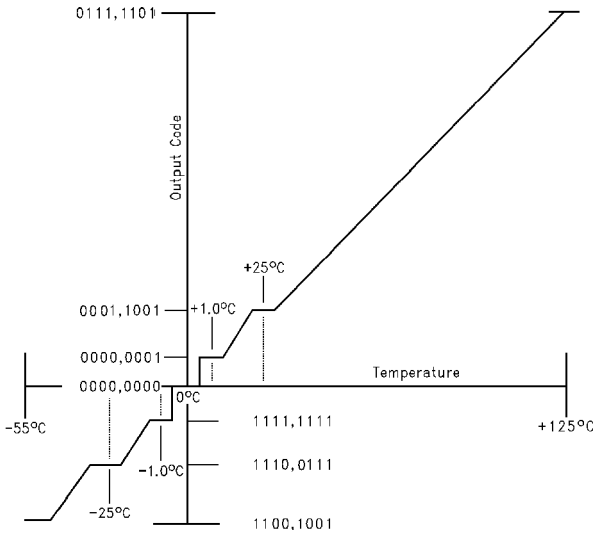

(Non-Linear Scale for Clarity)

Figure 11. 8-bit Temperature-to-Digital Transfer Function

Temperature Data Format

Temperature data can be read from the Temperature, T_{HIGH} setpoint, T_{LOW} setpoint, and Hardware Temperature limit registers; and written to the T_{HIGH} setpoint, T_{LOW} setpoint, and Hardware Temperature limit registers. T_{HIGH} setpoint, T_{LOW} setpoint, Hardware Temperature Limit, and Temperature data is represented by an 8-bit, two's complement word with an LSB (Least Significant Bit) equal to 1°C:

Temperature	Digital Output	
	Binary	Hex
+125°C	0111 1101	7Dh
+25°C	0001 1001	19h
+1.0°C	0000 0001	01h
+0°C	0000 0000	00h
−1.0°C	1111 1111	FFh
−25°C	1110 0111	E7h
−40°C	1101 1000	D8h

Copyright © 2000–2013, Texas Instruments Incorporated

Internal Temperature Measurement

The LM87 internal temperature is monitored using a junction type temperature sensor.

Remote Temperature Measurement

The LM87 monitors the temperature of remote semiconductor devices using the p-n junction temperature sensing principal. Up to two remote IC, diode or bipolar transistor temperatures can be monitored. The remote measurement channels have been optimized to measure the remote diode of a Pentium II processor. A discrete diode or bipolar transistor can also be used to sense the temperature of external objects or ambient air. The 2N3904 NPN transistor base emitter junction performs well in this type of application. When using a 2N3904, the collector should be connected to the base to provide a device that closely approximates the characteristics of the Pentium II PNP monitoring diode.

When using two external 2N3904 sensors, the D− inputs should be connected together. This provides the best possible accuracy by compensating for differences between the 2N3904 and Pentium II sensors.

During each conversion cycle, the remote monitoring inputs perform an external diode fault detection sequence. If the D+ input is shorted to V_{CC} or floating then the temperature reading will be +127°C, and bit 6 or bit 7 of Interrupt Status Register 2 will be set. If D+ is shorted to GND or D−, the temperature reading will be 0°C and bit 6 or 7 of Interrupt Status Register 2 will not be set.

Accuracy Effects of Diode Non-Ideality Factor

The technique used in today's remote temperature sensors is to measure the change in V_{BE} at two different operating points of a diode. For a bias current ratio of N:1, this difference is given as:

$$\Delta V_{BE} = \eta \frac{kT}{q} \ln(N)$$

where

- η is the non-ideality factor of the process the diode is manufactured on,
- q is the electron charge,
- k is the Boltzmann's constant,
- N is the current ratio,
- T is the absolute temperature in °K. (4)

The temperature sensor then measures ΔV_{BE} and converts to digital data. In this equation, k and q are well defined universal constants, and N is a parameter controlled by the temperature sensor. The only other parameter is η, which depends on the diode that is used for measurement. Since ΔV_{BE} is proportional to both η and T, the variations in η cannot be distinguished from variations in temperature. Since the non-ideality factor is not controlled by the temperature sensor, it will directly add to the inaccuracy of the sensor. For the Pentium II Intel specifies a ±1% variation in η from part to part. As an example, assume a temperature sensor has an accuracy specification of ±3°C at room temperature of 25°C and the process used to manufacture the diode has a non-ideality variation of ±1%. The resulting accuracy of the temperature sensor at room temperature will be:

$$T_{ACC} = \pm 3°C + (\pm 1\% \text{ of } 298°K) = \pm 6°C \quad (5)$$

The additional inaccuracy in the temperature measurement caused by η, can be eliminated if each temperature sensor is calibrated with the remote diode that it will be paired with.

PCB Layout Recommendations for Minimizing Noise

In a noisy environment, such as a processor mother board, layout considerations are very critical. Noise induced on traces running between the remote temperature diode sensor and the LM87 can cause temperature conversion errors. The following guidelines should be followed:

1. Place a 0.1 µF power supply bypass capacitor as close as possible to the V_{CC} pin and the recommended 2.2 nF capacitor as close as possible to the D+ and D− pins. Make sure the traces to the 2.2 nF capacitor are matched.
2. Ideally, the LM87 should be placed within 10 cm of the Processor diode pins with the traces being as straight, short and identical as possible.
3. Diode traces should be surrounded by a GND guard ring to either side, above and below if possible. This GND guard should not be between the D+ and D− lines. In the event that noise does couple to the diode lines it would be ideal if it is coupled common mode. That is equally to the D+ and D− lines.
4. Avoid routing diode traces in close proximity to power supply switching or filtering inductors.
5. Avoid running diode traces close to or parallel to high speed digital and bus lines. Diode traces should be kept at least 2 cm. apart from the high speed digital traces.
6. If it is necessary to cross high speed digital traces, the diode traces and the high speed digital traces should cross at a 90 degree angle.
7. The ideal place to connect the LM87's GND pin is as close as possible to the Processors GND associated with the sense diode. For the Pentium II this would be pin A14.

Figure 12. Recommended Diode Trace Layout

Noise on the digital lines, overshoot greater than V_{CC} and undershoot less than GND, may prevent successful SMBus communication with the LM87. SMBus no acknowledge is the most common symptom, causing unnecessary traffic on the bus. Although, the SMBus maximum frequency of communication is rather low (400 kHz max) care still needs to be taken to ensure proper termination within a system with multiple parts on the bus and long printed circuit board traces. A lowpass filter, in series with the SMBCLK and SMBData, has been added internally to the LM87 for noise immunity. The lowpass filter has a typical cutoff frequency of 20MHz. Additional noise immunity can be achieved by placing a resistor (4.7k to 5.1k Ohms) in series with the SMBCLK input as close to the LM87 as possible. This resistance, in conjunction with the IC input capacitance, reduces high frequency noise seen at the SMBCLK input and increases the reliability of communications.

 Copyright © 2000–2013, Texas Instruments Incorporated

WATCHDOG LIMIT COMPARISONS AND INTERRUPT STRUCTURE

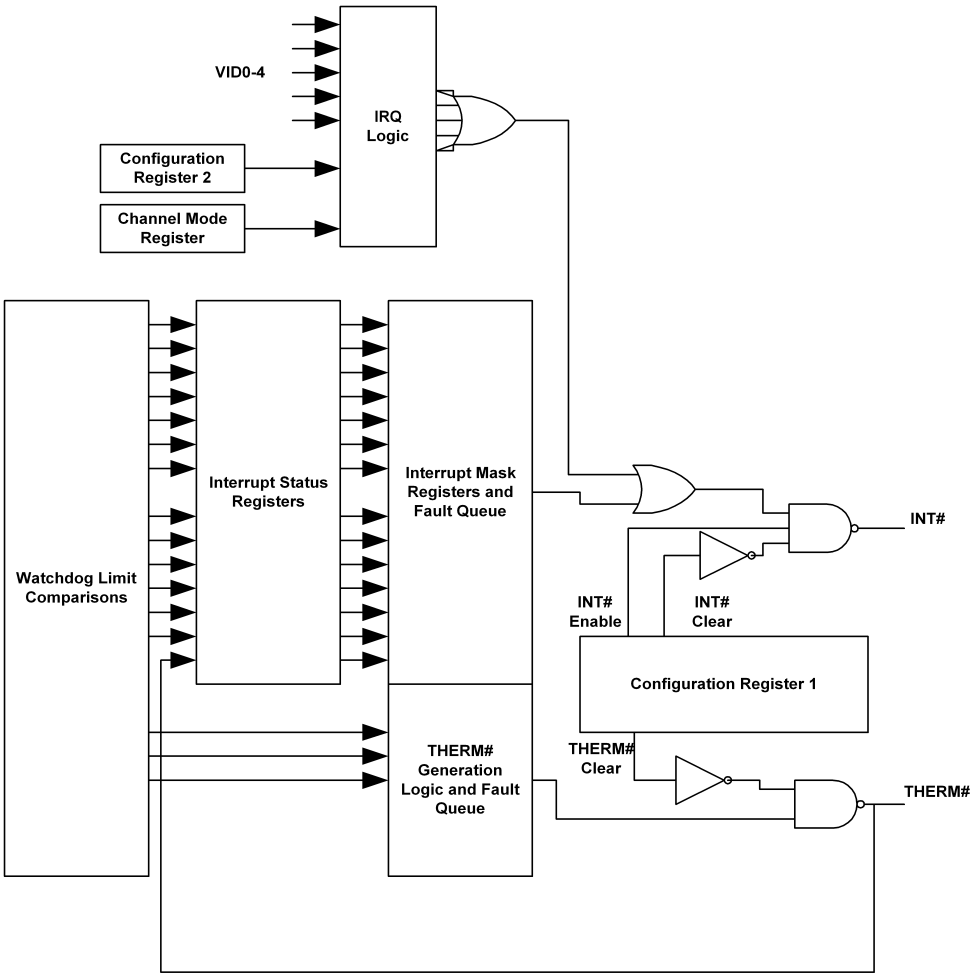

Figure 13. Interrupt Structure

Figure 13 depicts the Interrupt Structure of the LM87. The LM87 can generate Interrupts as a result of each of its internal WATCHDOG registers on the analog, temperature, and fan inputs.

External Interrupts can come from the following sources. While the label suggests a specific type or source of Interrupt, this label is not a restriction of its usage, and it could come from any desired source:

- **Chassis Intrusion:** This is an active high interrupt from any type of device that detects and captures chassis intrusion violations. This could be accomplished mechanically, optically, or electrically, and circuitry external to the LM87 is expected to latch the event. The design of the LM87 allows this input to go high even with no power applied to the LM87, and no clamping or other interference with the line will occur. This line can also be pulled low for at least 20 ms by the LM87 to reset a typical Chassis Intrusion circuit. This reset is activated by setting Bit 7 of CI Clear Register (46h) high. The bit in the Register is self-clearing.
- **THERM# Input:** This is an active low interrupt that would typically be generated by an external temperature monitoring system. If the THERM# output is currently inactive and this input is pulled low by an external circuit, the THERM# Interrupt Status bit will be set. In addition, the DAC output will be forced to full scale operation while THERM# is pulled low by the external source. This allows a separate thermal sensor to override the current fan speed setting in an overtemperature situation not sensed by the LM87. The DAC setting will return to normal when the THERM# input is deactivated and the DAC setting register is unaffected by the THERM# input condition.
- **IRQ0-2:** These are active low inputs from any type of external interrupt source. If enabled via the Channel Mode Register (16h) the INT# output will be activated whenever these inputs are pulled low. Since there are no dedicated ISR bits that correspond to the IRQ inputs, the VID status bits can be read to determine which

IRQ input is active. Similarly, to mask off these inputs as interrupt sources, they must be disabled via the Channel Mode Register (16h).

- **IRQ3-4:** These are active high inputs from any type of external interrupt source. If enabled via the Channel Mode Register (16h) and Configuration Register 2 (4Ah), the INT# output will be activated whenever these inputs are driven high. Since there are no dedicated ISR bits that correspond to the IRQ inputs, the VID status bits can be read to determine which IRQ input is active. Similarly, to mask off these inputs as interrupt sources, they must be disabled via Configuration Register 2 (4Ah).

With the exception of the IRQ inputs and Hardware Temperature errors, all interrupts are indicated in the two Interrupt Status Registers. The INT# output has two mask registers, and individual masks for each Interrupt. As described in Configuration Registers and Channel Mode Register, the hardware Interrupt line can also be enabled/disabled in the Configuration Register.

The THERM# interrupt output is dedicated to temperature and therefore is only related to internal and external temperature readings, and the Low, High and Hardware temperature limits.

INT# Interrupts

The INT# system combines several groups of error signals together into a common output. These groups are; IRQ inputs, Voltage and Fan inputs, Temperature Values, and the THERM# input. Each one of these groups or channels functions a little differently.

The IRQ inputs provide the least complicated INT# operation. The IRQ input block is enabled by setting bit 7of the Channel Mode Register (16h) to 0. Then the individual inputs are enabled by setting the corresponding IRQ Enable bits to 1. If an IRQ input is enabled, and subsequently an input signal is asserted on that channel, the INT# output will be asserted. During the interrupt service routine, the INT# output can be deasserted in a number of ways. The INT#_Clear bit can be set during the ISR to prevent further interrupts from occurring. Then the IRQ enable bit for the particular input can be cleared to prevent that channel from causing further interrupts. At this point the INT#_Clear bit can be cleared and no further interrupts would be issued from this particular IRQ input. Once the signal causing the IRQ has been removed, the enable bit for that IRQ channel could be set again.

Voltage, Fan, and Temperature High/Low errors are slightly more complex in their generation of INT# outputs. All of these error bits are stored in the Interrupt Status Registers at 43h, 44h and the Interrupt Status Mirror Registers at 4Ch and 4Dh. These inputs are gated by the Interrupt Mask Registers and processed by the INT# state machine to generate the INT# output.

Voltage and Fan error conditions are processed as follows. Every time a round robin conversion cycle is completed, the high/low limit comparisons for voltage and fan quantities are updated. If a quantity is outside the limits, the appropriate Interrupt Status Register bit will be set. If the corresponding Interrupt Mask Register bit is 0, then the Status Bit will cause the INT# output to be asserted. Reading the Interrupt Status register will clear the Status Bit and cause the INT# output to be deasserted. If the parameter is still outside the limits on the next conversion, the status bit will again be set and it will again cause an interrupt. If, on a subsequent conversion cycle, the parameter returns within the High/Low limits before the Interrupt Status Registers are read, the Interrupt Status bit will remain set and the INT# output will remain asserted.

Temperature High/Low errors are somewhat more complicated. The internal temperature value is compared with the Internal Temperature High and Low Limits in Registers 39h and 3Ah (and with the Internal Temperature Hardware High Limit in Registers 13h and 17h, see the next paragraph for details). We will begin with the temperature value initially within the High/Low limits and the corresponding Interrupt Mask Bit = 0. If the temperature value rises above the high limit, or below the low limit, the corresponding Interrupt Status Register bit will be set. This will then cause an INT# to be asserted. Reading the Interrupt Status Register will clear the status bit and cause INT# to be deasserted. If the temperature value remains above the high limit during subsequent conversion cycles, the Interrupt Status Bit will again be set, but no new INT# will be generated from this source. INT# may be reasserted if:

- The temperature then transitions up or down through the opposite limit to that originally exceeded.
- The original limit crossed is programmed to a new value and on a subsequent conversion cycle, the converted temperature is outside the new limit. This would cause the corresponding Interrupt Status Bit to be set, causing a new INT# event.
- An interrupt is generated by any other source, including any other temperature error or the THERM# pin being pulled low by an external signal.

 Copyright © 2000–2013, Texas Instruments Incorporated

The third group of signals that will generate INT# outputs are Hardware Temperature errors, caused by temperatures exceeding the hardware limits stored at 13h, 14h, 17h, and 18h.The internal temperature value is compared with the Internal Temperature Hardware High Limits in Registers 13h and 17h. The external temperature values are compared with the External Temperature Hardware High Limits in Registers 14h and 18h. The limits in Register 14h and 18h apply equally to the values of both D1 and D2. Both temperature values are individually compared with both limit values.

The only difference between the different Hardware Limit registers is that by writing a 1 into Bit 1 of register 4Ah, the contents of register 13h will be locked and cannot be reprogrammed. Similarly, the contents of register 14h will be locked by writing a 1 into Bit 2 of register 4Ah. The registers can only be reprogrammed if Bit 7 of Configuration Register 1 (40h) is written to re-Initialize the chip, or power is removed and reapplied. This feature is provided to prevent software from unintentionally overwriting these important limits.

Again, we will assume that the temperature initially is below the Hardware Temperature setpoints. If the temperature on a subsequent conversion is above any of the values stored in the Hardware Temperature Limit registers, the INT# output will be asserted. Errors caused by exceeding these limits cannot be cleared by reading the Interrupt Status Registers, and the INT# condition can only be cleared by clearing the Thermal INT# Enable bit, by setting the INT#_Clear bit or by disabling INT# by clearing the INT#_Enable bit.

The final INT# source to consider is the THERM# input/output. THERM# can be pulled low by an external source to generate an INT# output. Pulling THERM# low with external circuitry sets the corresponding THERM# Interrupt Status Bit. If this bit is not masked, it will cause INT# to be asserted. Reading the Interrupt Status Registers will clear the status bit and will cause INT# to be deasserted. If the external signal continues to pull THERM# low, the Interrupt Status Bit will be reset at the completion of the next conversion cycle. This will again assert the INT# output. Note that if the external circuitry pulls THERM# low, but this pin is already low due to the THERM# output being active, this external signal cannot be sensed, and the THERM# Interrupt Status Bit will not be set.

Interrupt Status Registers: Reading a Status Register will return the contents of the Register, and reset the Register. A subsequent read done before the analog “round-robin” monitoring loop is complete will indicate a cleared Register. Allow at least 600 ms to allow all Registers to be updated between reads. In summary, the Interrupt Status Register clears upon being read, and requires at least 300 ms to be updated. When the Interrupt Status Register clears, the hardware interrupt line will also clear until the Registers are updated by the monitoring loop.

Interrupt Status Mirror Registers: The Interrupt Status Mirror Registers provide the same information that the Interrupt Status Registers do. Reading the Status Mirror Registers, however, **does not** reset the status bits.

Interrupt Mask Registers: All sources which are combined to form the INT# output can be individually masked via the two Interrupt Mask Registers at 43h, and 44h. The bits in the mask registers correspond directly to the bits in the Interrupt Status Registers. Setting an Interrupt Mask bit inhibits that Interrupt Status Bit from generating an INT# interrupt. Clearing a mask bit allows the corresponding status bit, if set, to generate INT# outputs. Interrupt Status Bits will be set and cleared regardless of the state of corresponding Interrupt Mask Bits, the mask bits merely allow or prevent the status bits from contributing to the generation of INT# outputs.

Enabling and Clearing INT#: The hardware Interrupt line (INT#) is enabled by setting the INT#_Enable bit at Bit 1 of Configuration Register 1. The INT# output can be cleared by setting the INT#_Clear bit which is Bit 3 of Configuration Register 1. When this bit is high, the LM87 monitoring loop will stop. It will resume when the bit is low.

Thermal Interrupt Mask: In some applications, the user may want to prevent all thermal error conditions from causing INT# interrupts. The Thermal INT# Mask bit (Bit 0 of Configuration Register 2) is provided for this purpose. The THERM# output discussed later is not affected by the status of the Thermal INT# Mask bit and will function normally in response to temperature error conditions. If the Thermal INT# Mask bit is set, the interrupt status for internal and external temperature, the THERM# input, and the hardware temperature error comparisons, will continue to be updated every conversion cycle, but will not have any effect on the INT# output.

Copyright © 2000–2013, Texas Instruments Incorporated

SMBALERT#

The INT# I/O pin can alternatively be configured as an SMBALERT# output in conjunction with the SMBALERT# protocol. In this mode of operation, rather than connecting the INT# /ALERT# pin to the system interrupt inputs, it will be connected to the SMBALERT# input pin on the SMBus host. When an INT#/ALERT# type error condition is detected, this pin will notify the SMBus host that an SMBus device has an SMBALERT# condition. The SMBus host will then access the bus using the Alert Response Address (ARA) which is 0001100b. Only the device asserting the SMBALERT# signal will respond to the ARA, thus providing automatic identification of the device generating the SMBALERT#. After acknowledging the slave address, the LM87 will disengage its SMBALERT# output signal. For more information on the SMBALERT# protocol, please refer to the System Management Bus specification. SMBALERT# is enabled by setting Bit 6 of the Alert Response Enable register at 80h.

THERM# Interrupts

The THERM# I/O pin is dedicated to temperature related error conditions. It includes a built in pull-up resistor to minimize external components. The THERM# Enable bit, Bit 2 of Configuration Register 1 is used to enable the THERM# output. The THERM# Clear bit, Bit 6 of Configuration Register 1, when set to 1, clears the THERM# output. TheTHERM# output operates in two different modes when processing thermal error conditions, **Default Mode** and **ACPI Mode**, selected by the state of the THERM# Interrupt Mode bit at Bit 3 of Configuration Register 2 (0 = Default, 1 = ACPI).

Default Mode: The THERM# ouput operates using a simple comparison of temperature with the corresponding limit values. If any temperature value is outside a corresponding limit in registers 37h, 39h, 2Bh, 38h, 3Ah, or 2Ch, the THERM# output will go low. The output will remain asserted until it is reset by: reading Interrupt Status Register 1, by setting the THERM#CLR bit, or if the temperature falls below the low limit for that sensor. When THERM# is cleared by reading the status register, it may be set again after the next temperature reading, if the temperature is still above the high limit. When THERM# is cleared by setting THERM#CLR, it cannot be re-asserted until this bit is cleared. If THERM# is activated because a temperature value exceeds one of the hardware limits in registers 13h, 14h, 17h, or 18h, or exceeds 126 degrees C, AOUT will be forced to the full scale value. In this case, the THERM# output can only be cleared by setting the THERM#CLR bit or if the temperature returns to 5 degrees below the hardware limit. Regardless of how THERM# is cleared, AOUT will be maintained at the full scale value until the temperature returns to 5 degrees below the hardware limit that was exceeded.

ACPI Mode: In ACPI mode, THERM# is only activated when temperatures exceed the high limit settings in registers 13h, 14h, 17h, 18h or the safety limit of 126 degrees C. It will be de-asserted if the temperature returns at least 5 degrees below the limit. While THERM# is asserted, AOUT will be driven to full scale to provide maximum cooling from a variable speed fan.

THERM# also functions as an input. When an external active low signal is applied to THERM#, it will set the THERM# input Interrupt Status Bit and will cause AOUT to go to full scale, regardless of the state of the THERM# Input Interrupt Mask bit. If the Mask bit is cleared and INT# is enabled, an INT# will be generated. The THERM# input function is not affected by the THERM# operating mode.

Fault Queue

A Fault Queue is incorporated in the external temperature monitoring sections of the LM87. This serves as a filter to minimize false triggering caused by short duration or transient temperature events. The Fault Queue adds a counter between the comparison logic and the Interrupt Status Register and THERM# output circuitry. The Fault Queue has a depth of 3, so three consecutive readings outside of limits is required to set an external temperature Interrupt Status Bit or generate a THERM# output. When the monitored temperature is returning within limits, only one conversion within limits is required to clear the status bit. In other words, the fault queue is only active when travelling outside of the limits, not when returning back within limits.

 Copyright © 2000–2013, Texas Instruments Incorporated

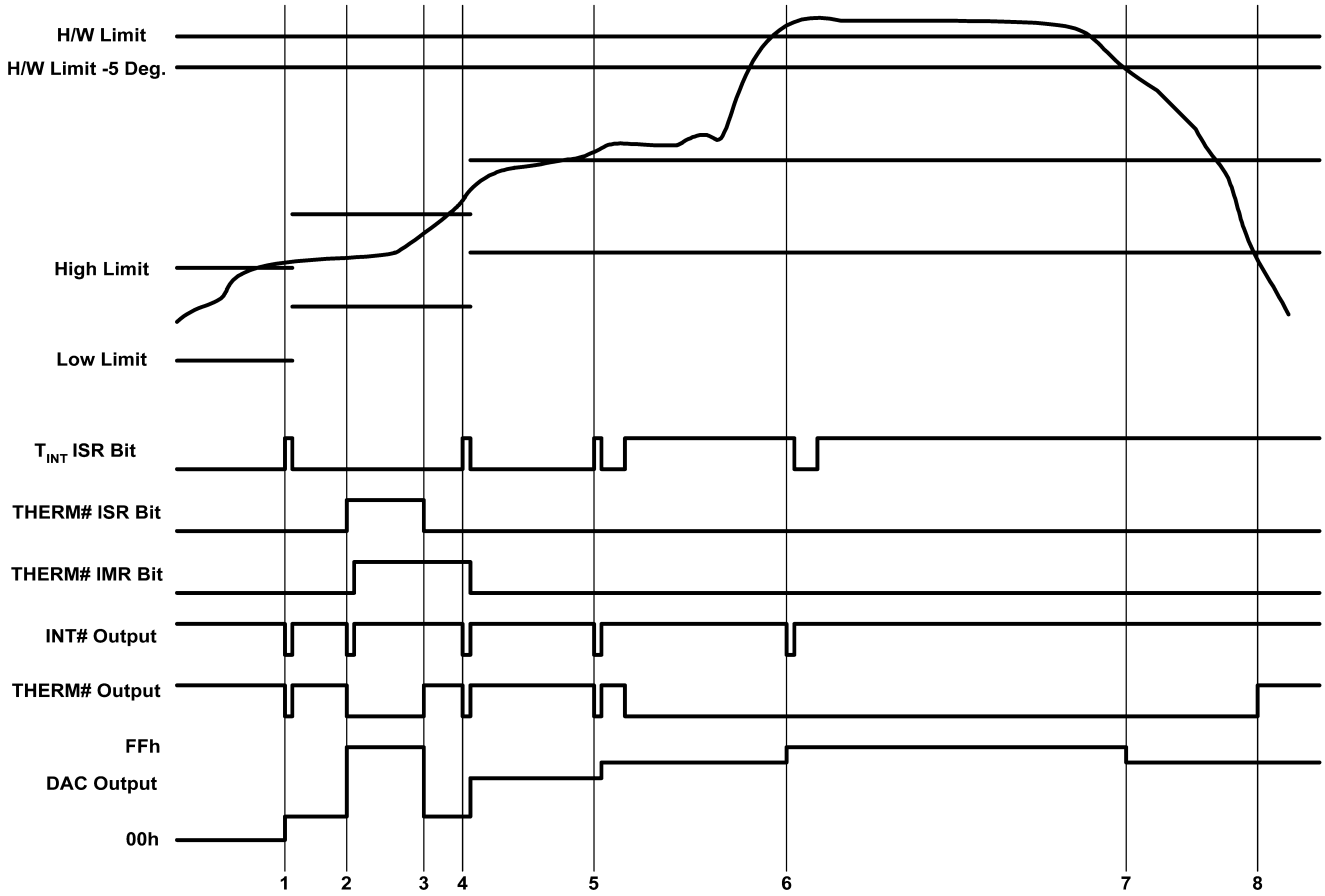

Figure 14. LM87 Interrupt Structure

RESET# I/O

RESET# is intended to provide a master reset to devices connected to this line. Setting Bit 4 in Configuration Register 1 high outputs a 20 ms (minimum) low pulse on this line, at the end of which Bit 4 in the Configuration Register automatically clears. Again, the label for this pin is only its suggested use. In applications where the RESET# capability is not needed it can be used for any type of digital control that requires a 20 ms (mimimum) active low, open-drain output.

RESET# operates as an input when not activated by Configuration Register 1. Setting this line low will reset all of the registers in the LM87 to their power on default state. All Value RAM locations will not be affected except for the DAC Data Register.

NAND TREE TESTS

A NAND tree is provided in the LM87 for Automated Test Equipment (ATE) board level connectivity testing. DACOut/NTEST_IN, INT#, THERM#, V^+ and GND pins are excluded from NAND tree testing. Taking DACOut/NTEST_IN high during power up activates the NAND Tree test mode. After the first SMBus access to the LM87 the NAND Tree test mode is terminated and cannot be reactivated without repeating the power up sequence. To perform a NAND tree test, all pins included in the NAND tree should be driven to 1 forcing the ADD/NTEST_OUT high. Each individual pin starting with SMBData and concluding with RESET# (excluding DACOut/NTEST_IN, INT#, THERM#, V^+ and GND) can be taken low with the resulting toggle observed on the ADD/NTEST_OUT pin. Allow for a typical propagation delay of 500 ns.

Copyright © 2000–2013, Texas Instruments Incorporated

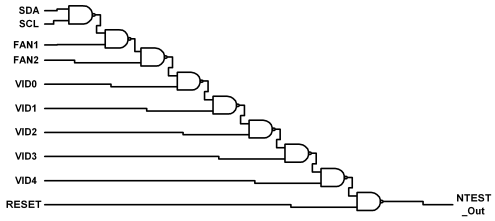

Figure 15. NAND Tree Test Structure

FAN MANUFACTURERS

Manufacturers of cooling fans with tachometer outputs are listed below:

NMB Tech

9730 Independence Ave.

Chatsworth, California 91311

818 341-3355

818 341-8207

Model Number	Frame Size	Airflow CFM
2408NL	2.36 in sq. X 0.79 in	9-16
	(60 mm sq. X 20 mm)	
2410ML	2.36 in sq. X 0.98 in	14-25
	(60 mm sq. X 25 mm)	
3108NL	3.15 in sq. X 0.79 in	25-42
	(80 mm sq. X 20 mm)	
3110KL	3.15 in sq. X 0.98 in	25-40
	(80 mm sq. X 25 mm)	

Mechatronics Inc.

P.O. Box 20

Mercer Island, WA 98040

800 453-4569

Various sizes available with tach output option.

Sanyo Denki America, Inc.

468 Amapola Ave.

Torrance, CA 90501

310 783-5400

Model Number	Frame Size	Airflow CFM
109P06XXY601	2.36 in sq. X 0.79 in	11-15
	(60 mm sq. X 20 mm)	
109R06XXY401	2.36 in sq. X 0.98 in	13-28
	(60 mm sq. X 25 mm)	
109P08XXY601	3.15 in sq. X 0.79 in	23-30
	(80 mm sq. X 20 mm)	
109R08XXY401	3.15 in sq. X 0.98 in	21-42

Copyright © 2000–2013, Texas Instruments Incorporated

Model Number	Frame Size	Airflow CFM
	(80 mm sq. X 25 mm)	

REGISTERS AND RAM

13.1 Address Pointer Register

The main register is the Address Pointer Register. The bit designations are as follows:

Bit	Name	Read/Write	Description
7-0	Address Pointer	Write	Address of RAM and Registers. See the tables below for detail.

Bit 7	Bit 6	Bit 5	Bit 4	Bit 3	Bit 2	Bit 1	Bit 0
Address Pointer (Power On default 00h)							
A7	A6	A5	A4	A3	A2	A1	A0

Address Pointer Index (A7–A0)

Registers and RAM	A6–A0 in Hex	Power On Value of Registers:	Notes
		<7:0> in Binary	
Internal Temp. Hardware High Limit	13h	0100 0110	70 °C Default - <7:0>=0100 0110 - User adjustable. Lockable by setting bit 1 of register 4Ah.
External Temp. Hardware High Limit	14h	0101 0101	85 °C Default - <7:0>=0101 0101 - User adjustable. Lockable by setting bit 2 of register 4Ah.
Test Register	15h	0000 0000	Always set to 00h
Channel Mode Register	16h	0000 0000	
Internal Temp. Hardware High Limit	17h	0100 0110	70 °C Default - <7:0>=0100 0110 - User adjustable
External Temp. Hardware High Limit	18h	0101 0101	85 °C Default - <7:0>=0101 0101 - User adjustable
Value RAM	19h–3Dh		See Value RAM—Address 19h–3Fh for details. Address 19h default=1111 1111
Company ID	3Eh	0000 0010	This designates the Texas Instruments LM87.
Revision	3Fh	0000 0110	Revisions of this device will start with 1 and increment by one.
Configuration Register 1	40h	0000 1000	
Interrupt Status Register 1	41h	0000 0000	
Interrupt Status Register 2	42h	0000 0000	
Interrupt Mask Register 1	43h	0000 0000	
Interrupt Mask Register 2	44h	0000 0000	
CI Clear Register	46h	0000 0000	
VID0-3/Fan Divisor	47h	<7:4> = 0101;	
Register		<3:0> = VID3–VID0	
VID4 Register	49h	<7:1> =1000 000; <0>=VID4	
Configuration Register 2	4Ah	0000 0000	
Interrupt Status Register 1 Mirror	4Ch	0000 0000	
Interrupt Status Register 2 Mirror	4Dh	0000 0000	
SMBALERT# Enable	80h	0010 0000	

Test Register—Address 15h

Power on default – <7:0> = 00000000 binary

Bit	Name	Read/Write	Description
0	Shutdown	Read/Write	A one places the LM87 in a lower power "Shutdown" mode.
1	Reserved	Read/Write	
2	Reserved	Read/Write	
3	Reserved	Read/Write	
4	Reserved	Read/Write	
5	Reserved	Read/Write	
6	Reserved	Read/Write	
7	Reserved	Read/Write	

Channel Mode Register—Address 16h

Power on default – <7:0> = 00000000 binary

Bit	Name	Read/Write	Description
0	FAN1/AIN1	Read/Write	A one enables the input as AIN1, a zero enables the input as FAN1.
1	FAN2/AIN2	Read/Write	A one enables the input as AIN2, a zero enables the input as FAN2.
2	2.5V, V_{CCP2}/D2	Read/Write	A one enables the 2.5V, V_{CCP2}/D2 inputs as a second remote diode temperature input.
3	Int. V_{CC} Range	Read/Write	A one configures the LM87 for 5.0V V_{CC} measurement. A zero configures it for 3.3V V_{CC} measurement.
4	IRQ0 EN	Read/Write	A one enables pin 24 as an active low interrupt input. Bit 7 must also be set to configure the VID/IRQ inputs to IRQ mode.
5	IRQ1 EN	Read/Write	A one enables pin 23 as an active low interrupt input. Bit 7 must also be set to configure the VID/IRQ inputs to IRQ mode.
6	IRQ2 EN	Read/Write	A one enables pin 22 as an active low interrupt input. Bit 7 must also be set to configure the VID/IRQ inputs to IRQ mode.
7	VID/IRQ	Read/Write	A one configures the VID/IRQ inputs as Interrupt Inputs. A zero configures the VID/IRQ inputs as VID inputs only.

 Copyright © 2000–2013, Texas Instruments Incorporated

Configuration Register 1—Address 40h

Power on default – <7:0> = 00001000 binary

Bit	Name	Read/Write	Description
0	Start	Read/Write	A one enables startup of monitoring operations, a zero puts the part in standby mode.
			Note: The outputs of Interrupt pins will not be cleared if the user writes a zero to this location after an interrupt has occurred, unlike the "INT_Clear" bit. At start up, limit checking functions and scanning begin. Note, all limits should be set in the Value RAM before setting this bit HIGH.
1	INT# Enable	Read/Write	A one enables the INT# Interrupt output.
2	THERM# Enable	Read/Write	A one enables the THERM# Interrupt output.
3	INT#_Clear	Read/Write	A one disables the INT# output without affecting the contents of Interrupt Status Registers. The device will stop monitoring. It will resume upon clearing of this bit.
4	RESET#	Read/Write	A one outputs a 20 ms minimum active low reset signal at RESET#. This bit is cleared once the pulse has gone inactive.
5	Reserved	Read/Write	
6	THERM#_Clear	Read/Write	A one disables the THERM# output without affecting the contents of Interrupt Status Registers.
7	INITIALIZATION	Read/Write	A one restores power on default values to the Configuration Register, Interrupt Status Registers, Interrupt Mask Registers, CI Clear Register, VID/Fan Divisor Register, VID4, Temperature Configuration Register, and the Extended Mode Registers. This bit clears itself since the power on default is zero.

Interrupt Status Register 1—Address 41h

Power on default – <7:0> = 0000 0000 binary

Bit	Name	Read/Write	Description
0	+2.5Vin	Read Only	A one indicates a High or Low limit has been exceeded.
1	Vccp1	Read Only	A one indicates a High or Low limit has been exceeded.
2	Vcc	Read Only	A one indicates a High or Low limit has been exceeded.
3	+5Vin	Read Only	A one indicates a High or Low limit has been exceeded.
4	Int. Temp.	Read Only	A one indicates a High or Low limit has been exceeded.
5	Ext. Temp.	Read Only	A one indicates a High or Low limit has been exceeded.
6	FAN1/AIN1	Read Only	A one indicates the fan count limit has been exceeded or an AIN1 High or Low limit has been exceeded.
7	FAN2/AIN2	Read Only	A one indicates the fan count limit has been exceeded or an AIN2 High or Low limit has been exceeded.

Interrupt Status Register 2—Address 42h

Power on default – <7:0> = 0000 0000 binary

Bit	Name	Read/Write	Description
0	+12Vin	Read Only	A one indicates a High or Low limit has been exceeded.
1	Vccp2	Read Only	A one indicates a High or Low limit has been exceeded.
2	Reserved	Read Only	
3	Reserved	Read Only	
4	CI	Read Only	A one indicates the CI (Chassis Intrusion) input has gone high.
5	THERM#	Read Only	A one indicates the THERM# input has been pulled low by external circuitry.
6	D1 Fault	Read Only	A one indicates the D1 inputs are shorted to Vcc or open circuit.
7	D2 Fault	Read Only	A one indicates the D2 inputs are shorted to Vcc or open circuit.

Copyright © 2000–2013, Texas Instruments Incorporated

Interrupt Mask Register 1—Address 43h

Power on default – <7:0> = 0000 0000 binary

Bit	Name	Read/Write	Description
0	+2.5Vin/D2+	Read/Write	A one disables the corresponding interrupt status bit for INT# interrupt.
1	Vccp1	Read/Write	A one disables the corresponding interrupt status bit for INT# interrupt.
2	Vcc	Read/Write	A one disables the corresponding interrupt status bit for INT# interrupt.
3	+5Vin	Read/Write	A one disables the corresponding interrupt status bit for INT# interrupt.
4	Int. Temp.	Read/Write	A one disables the corresponding interrupt status bit for INT# interrupt.
5	Ext. Temp.	Read/Write	A one disables the corresponding interrupt status bit for INT# interrupt.
6	FAN1/AIN1	Read/Write	A one disables the corresponding interrupt status bit for INT# interrupt.
7	FAN2/AIN2	Read/Write	A one disables the corresponding interrupt status bit for INT# interrupt.

Interrupt Mask Register 2—Address 44h

Power on default – <7:0> = 0000 0000 binary

Bit	Name	Read/Write	Description
0	+12Vin	Read/Write	A one disables the corresponding interrupt status bit for INT# interrupt.
1	Vccp2	Read/Write	A one disables the corresponding interrupt status bit for INT# interrupt.
2	Reserved	Read/Write	
3	Reserved	Read/Write	
4	Chassis Intrusion	Read/Write	A one disables the corresponding interrupt status bit for INT# interrupt.
5	THERM#	Read/Write	A one disables the corresponding interrupt status bit for INT# interrupt.
6	D1 Fault	Read/Write	A one disables the corresponding interrupt status bit for INT# interrupt.
7	D2 Fault	Read/Write	A one disables the corresponding interrupt status bit for INT# interrupt.

Reserved Register —Address 45h

Power on default – <7:0> = 00h. Read/Write for backwards compatibility.

CI Clear Register—Address 46h

Power on default – <7:0> = 0000 0000 binary

Bit	Name	Read/Write	Description
0-6	Reserved	Read/Write	
7	CI Clear	Read/Write	A one outputs a minimum 20 ms (minimum) active low pulse on the Chassis Intrusion pin. The register bit self clears after the pulse has been output.

Copyright © 2000–2013, Texas Instruments Incorporated

VID0-3/Fan Divisor Register—Address 47h

Power on default – <7:4> is 0101, and <3:0>is mapped to VID <3:0>

Bit	Name	Read/Write	Description
0-3	VID <3:0>	Read Only	The VID <3:0> inputs from the Pentium/PRO power supplies that indicate the operating voltage (e.g. 1.5 V to 2.9 V).
4-5	FAN1 RPM Control	Read/Write	FAN1 Speed Control.
			<5:4> = 00 - divide by 1;
			<5:4> = 01 - divide by 2;
			<5:4> = 10 - divide by 4;
			<5:4> = 11 - divide by 8.
6-7	FAN2 RPM Control	Read/Write	FAN2 Speed Control.
			<7:6> = 00 - divide by 1;
			<7:6> = 01 - divide by 2;
			<7:6> = 10 - divide by 4;
			<7:6> = 11 - divide by 8.

VID4 Register—Address 49h

Power on default – <7:1> = 100 000, <0> = VID4.

Bit	Name	Read/Write	Description
0	VID4	Read Only	Bit 4 of VID data from the CPU or power supply that indicates the operating voltage (e.g. 1.5 V to 2.9 V).
1-7	Reserved	Read/Write	

Configuration Register 2—Address 4Ah

Power on default – <7:0> = 0000 0000 binary

Bit	Name	Read/Write	Description
0	Thermal INT# Mask	Read/Write	When this bit is set to 1, thermal error events will not affect the INT# interrupt output. THERM# outputs will still function normally.
1	Local Temp. Register Write Once Bit	Read/Write Once	When set to 1, this bit locks in the value set in the Internal Temp. high limit register at 0x13h. The value cannot be changed until a power on reset is performed, or the chip is re-Initialized by writing a 1 to Bit 7 of Configuration Register 1 (Register 40h).
2	Remote Temp. Register Write Once Bit	Read/Write Once	When set to 1, this bit locks in the value set in the External Temp. high limit register at 0x14h. The value cannot be changed until a power on reset is performed, or the chip is re-Initialized by writing a 1 to Bit 7 of Configuration Register 1 (Register 40h).
3	THERM# Interrupt Mode	Read/Write	When set to 0, the THERM# output functions in Default mode. When set to 1, the THERM# output functions in ACPI mode.
4-5	Reserved		
6	IRQ3 Enable	Read/Write	When set to 1, VID3/IRQ3 is enabled as an active high interrupt input (if the IRQEN bit is set in bit 7 of the Channel Mode Register).
7	IRQ4 Enable	Read/Write	When set to 1, VID4/IRQ4 is enabled as an active high interrupt input (if the IRQEN bit is set in bit 7 of the Channel Mode Register).

Copyright © 2000–2013, Texas Instruments Incorporated

Interrupt Status Register 1 Mirror—Address 4Ch

Power on default – <7:0> = 0000 0000 binary

Bit	Name	Read Only	Description
0	+2.5Vin	Read Only	A one indicates a High or Low limit has been exceeded.
1	Vccp1	Read Only	A one indicates a High or Low limit has been exceeded.
2	Vcc	Read Only	A one indicates a High or Low limit has been exceeded.
3	+5Vin	Read Only	A one indicates a High or Low limit has been exceeded.
4	Int. Temp.	Read Only	A one indicates a High or Low limit has been exceeded.
5	Ext. Temp.	Read Only	A one indicates a High or Low limit has been exceeded.
6	FAN1/AIN1	Read Only	A one indicates the fan count limit has been exceeded or an AIN1 High or Low limit has been exceeded.
7	FAN2/AIN2	Read Only	A one indicates the fan count limit has been exceeded or an AIN2 High or Low limit has been exceeded.

nterrupt Status Register 2 Mirror—Address 4Dh

Power on default – <7:0> = 0000 0000 binary

Bit	Name	Read Only	Description
0	+12Vin	Read Only	A one indicates a High or Low limit has been exceeded.
1	Vccp2	Read Only	A one indicates a High or Low limit has been exceeded.
2	Reserved	Read Only	
3	Reserved	Read Only	
4	CI	Read Only	A one indicates the CI (Chassis Intrusion) input has gone high.
5	THERM#	Read Only	A one indicates the THERM# input has been pulled low by external circuitry.
6	D1 Fault	Read Only	A one indicates the D1 inputs are shorted to Vcc or open circuit.
7	D2 Fault	Read Only	A one indicates the D2 inputs are shorted to Vcc or open circuit.

SMBALERT# Enable—Address 80h

Power on default – <7:0> = 0010 0000 binary

Bit	Name	Read/Write	Description
0	Reserved	Read Only	
1	Reserved	Read Only	
2	Reserved	Read Only	
3	Reserved	Read Only	
4	Reserved	Read Only	
5	Reserved	Read Only	
6	SMBALERT# Enable	Read/Write	A one enables the SMBALERT# mode of operation.
7	Reserved	Read Only	

Copyright © 2000–2013, Texas Instruments Incorporated

Value RAM—Address 19h–3Fh

Address A6–A0	Description
19h	DAC data register; power on default <7:0>=1111 1111 binary
1Ah	AIN1 Low Limit
1Bh	AIN2 Low Limit
20h	+2.5V/External Temperature 2 reading
21h	Vccp1 reading
22h	+Vcc reading
23h	+5V reading
24h	+12V reading
25h	Vccp2 reading
26h	External Temperature 1 reading
27h	Internal Temperature reading
28h	FAN1/AIN1 reading
	Note: For the FAN reading, this location stores the number of counts of the internal clock per revolution.
29h	FAN2/AIN2 reading
	Note: For the FAN reading, this location stores the number of counts of the internal clock per revolution.
2Ah	Reserved
2Bh	+2.5V High Limit/External Temperature 2 High Limit
2Ch	+2.5V Low Limit/External Temperature 2 Low Limit
2Dh	Vccp1 High Limit
2Eh	Vccp1 Low Limit
2Fh	+3.3V High Limit
30h	+3.3V Low Limit
31h	+5V High Limit
32h	+5V Low Limit
33h	+12V High Limit
34h	+12V Low Limit
35h	Vccp2 High Limit
36h	Vccp2 Low Limit
37h	External Temperature 1 High Limit
38h	External Temperature 1 Low Limit
39h	Internal Temperature High Limit
3Ah	Internal Temperature Low Limit
3Bh	FAN1Count Limit/AIN1 High Limit
	Note: It is the number of counts of the internal clock for the Low Limit of the fan speed.
3Ch	FAN2 Fan Count Limit/AIN2 High Limit
	Note: It is the number of counts of the internal clock for the Low Limit of the fan speed.
3Dh	Reserved
3Eh	Company Identification. The number in this register identifies Texas Instruments LM87 (0000 0010)
3Fh	Stepping Register LM87 revision number 06h(0000 0110)

Copyright © 2000–2013, Texas Instruments Incorporated

Note: Setting all ones to the high limits for voltages and fans (0111 1111 binary for temperature) means interrupts will **never** be generated except the case when voltages go below the low limits.

For voltage input high limits, the device is doing a greater than comparison. For low limits, however, it is doing a less than or equal to comparison.

Typical Application

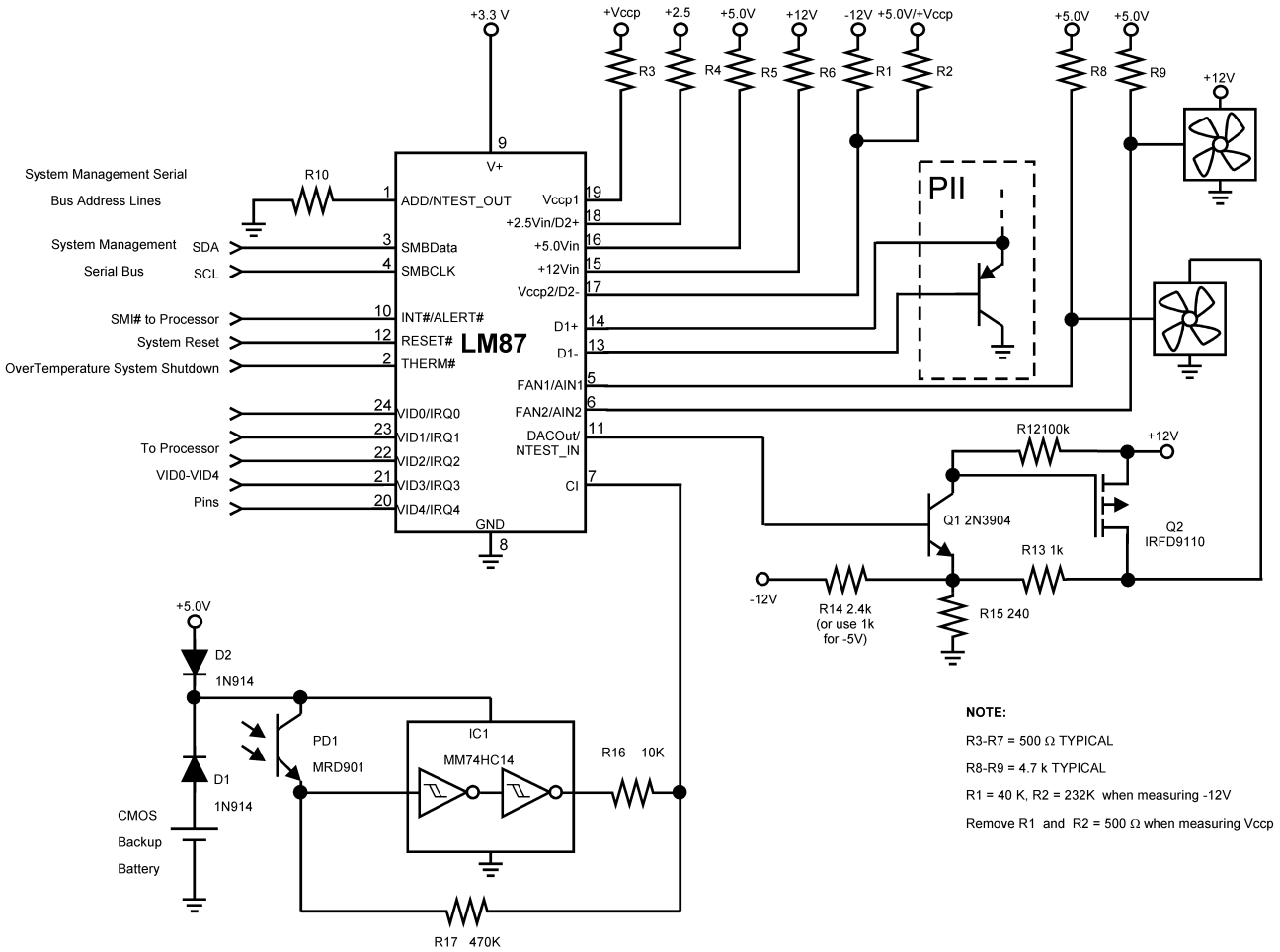

In this PC application the LM87 monitors temperature, fan speed for 2 fans, and 6 power supply voltages. It also monitors an optical chassis intrusion detector.
The LM87 provides a DAC output that can be used to control fan speed.

Figure 16.

Copyright © 2000–2013, Texas Instruments Incorporated

REVISION HISTORY

Changes from Revision I (March 2013) to Revision J	Page
• Changed layout of National Data Sheet to TI format	36

PACKAGING INFORMATION

Orderable part number	Status (1)	Material type (2)	Package | Pins	Package qty | Carrier	RoHS (3)	Lead finish/ Ball material (4)	MSL rating/ Peak reflow (5)	Op temp (°C)	Part marking (6)
LM87CIMT	NRND	Production	TSSOP (PW) | 24	61 | TUBE	No	SNPB	Level-1-260C-UNLIM	-40 to 125	LM87CIMT
LM87CIMT.A	NRND	Production	TSSOP (PW) | 24	61 | TUBE	No	Call TI	Call TI	-40 to 125	LM87CIMT
LM87CIMT/NOPB	Obsolete	Production	TSSOP (PW) | 24	-	-	Call TI	Call TI	-40 to 125	LM87CIMT
LM87CIMTX/NOPB	Active	Production	TSSOP (PW) | 24	2500 | LARGE T&R	Yes	SN	Level-1-260C-UNLIM	-40 to 125	LM87CIMT
LM87CIMTX/NOPB.A	Active	Production	TSSOP (PW) | 24	2500 | LARGE T&R	Yes	SN	Level-1-260C-UNLIM	-40 to 125	LM87CIMT

(1) **Status:** For more details on status, see our product life cycle.

(2) **Material type:** When designated, preproduction parts are prototypes/experimental devices, and are not yet approved or released for full production. Testing and final process, including without limitation quality assurance, reliability performance testing, and/or process qualification, may not yet be complete, and this item is subject to further changes or possible discontinuation. If available for ordering, purchases will be subject to an additional waiver at checkout, and are intended for early internal evaluation purposes only. These items are sold without warranties of any kind.

(3) **RoHS values:** Yes, No, RoHS Exempt. See the TI RoHS Statement for additional information and value definition.

(4) **Lead finish/Ball material:** Parts may have multiple material finish options. Finish options are separated by a vertical ruled line. Lead finish/Ball material values may wrap to two lines if the finish value exceeds the maximum column width.

(5) **MSL rating/Peak reflow:** The moisture sensitivity level ratings and peak solder (reflow) temperatures. In the event that a part has multiple moisture sensitivity ratings, only the lowest level per JEDEC standards is shown. Refer to the shipping label for the actual reflow temperature that will be used to mount the part to the printed circuit board.

(6) **Part marking:** There may be an additional marking, which relates to the logo, the lot trace code information, or the environmental category of the part.

Multiple part markings will be inside parentheses. Only one part marking contained in parentheses and separated by a "~" will appear on a part. If a line is indented then it is a continuation of the previous line and the two combined represent the entire part marking for that device.

Important Information and Disclaimer: The information provided on this page represents TI's knowledge and belief as of the date that it is provided. TI bases its knowledge and belief on information provided by third parties, and makes no representation or warranty as to the accuracy of such information. Efforts are underway to better integrate information from third parties. TI has taken and continues to take reasonable steps to provide representative and accurate information but may not have conducted destructive testing or chemical analysis on incoming materials and chemicals. TI and TI suppliers consider certain information to be proprietary, and thus CAS numbers and other limited information may not be available for release.

In no event shall TI's liability arising out of such information exceed the total purchase price of the TI part(s) at issue in this document sold by TI to Customer on an annual basis.

TAPE AND REEL INFORMATION

REEL DIMENSIONS

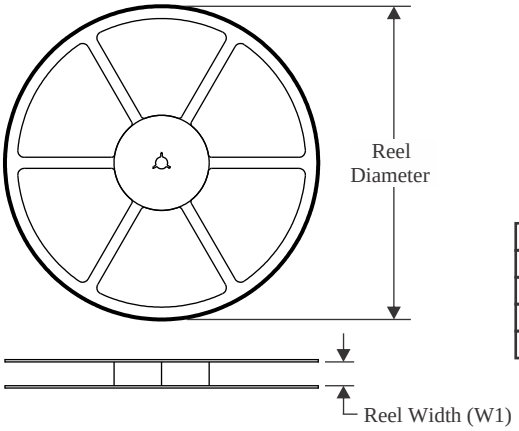

TAPE DIMENSIONS

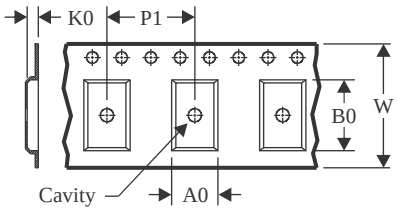

A0	Dimension designed to accommodate the component width
B0	Dimension designed to accommodate the component length
K0	Dimension designed to accommodate the component thickness
W	Overall width of the carrier tape
P1	Pitch between successive cavity centers

QUADRANT ASSIGNMENTS FOR PIN 1 ORIENTATION IN TAPE

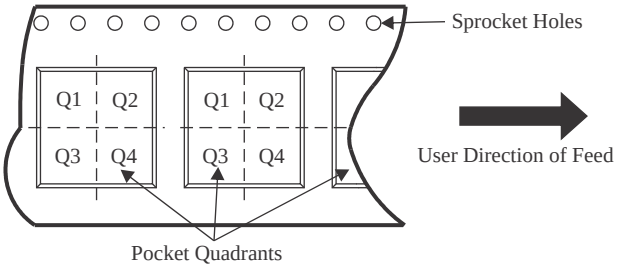

*All dimensions are nominal

Device	Package Type	Package Drawing	Pins	SPQ	Reel Diameter (mm)	Reel Width W1 (mm)	A0 (mm)	B0 (mm)	K0 (mm)	P1 (mm)	W (mm)	Pin1 Quadrant
LM87CIMTX/NOPB	TSSOP	PW	24	2500	330.0	16.4	6.95	8.3	1.6	8.0	16.0	Q1

TAPE AND REEL BOX DIMENSIONS

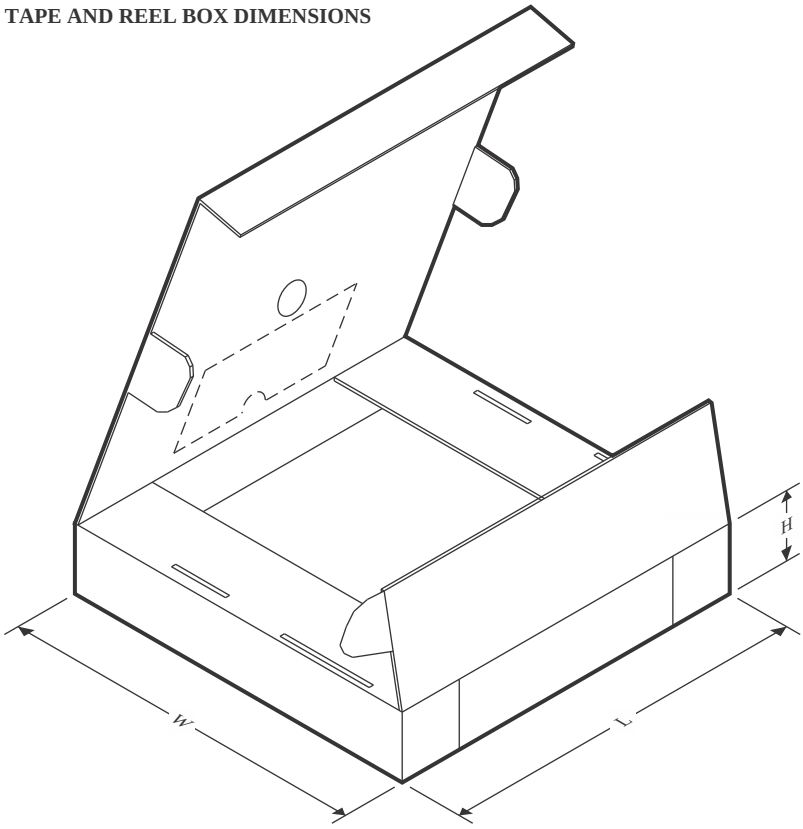

*All dimensions are nominal

Device	Package Type	Package Drawing	Pins	SPQ	Length (mm)	Width (mm)	Height (mm)
LM87CIMTX/NOPB	TSSOP	PW	24	2500	367.0	367.0	35.0

TUBE

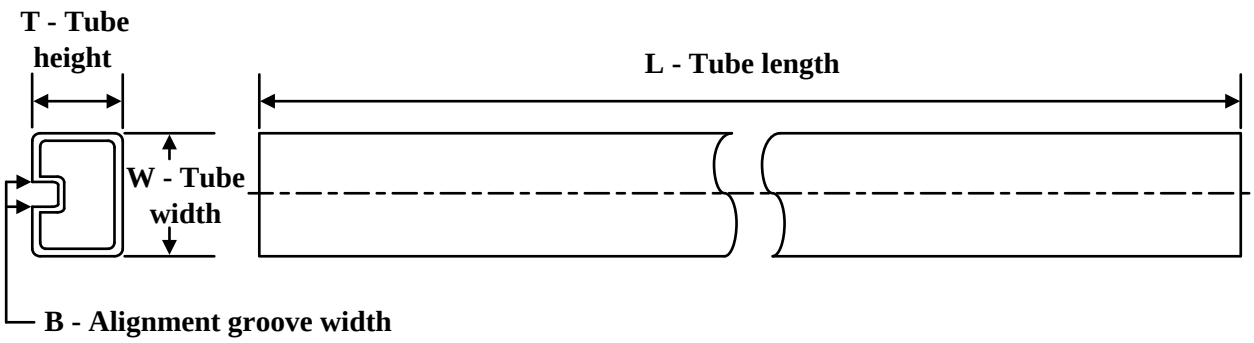

*All dimensions are nominal

Device	Package Name	Package Type	Pins	SPQ	L (mm)	W (mm)	T (µm)	B (mm)
LM87CIMT	PW	TSSOP	24	61	495	8	2514.6	4.06
LM87CIMT	PW	TSSOP	24	61	495	8	2514.6	4.06
LM87CIMT.A	PW	TSSOP	24	61	495	8	2514.6	4.06
LM87CIMT.A	PW	TSSOP	24	61	495	8	2514.6	4.06

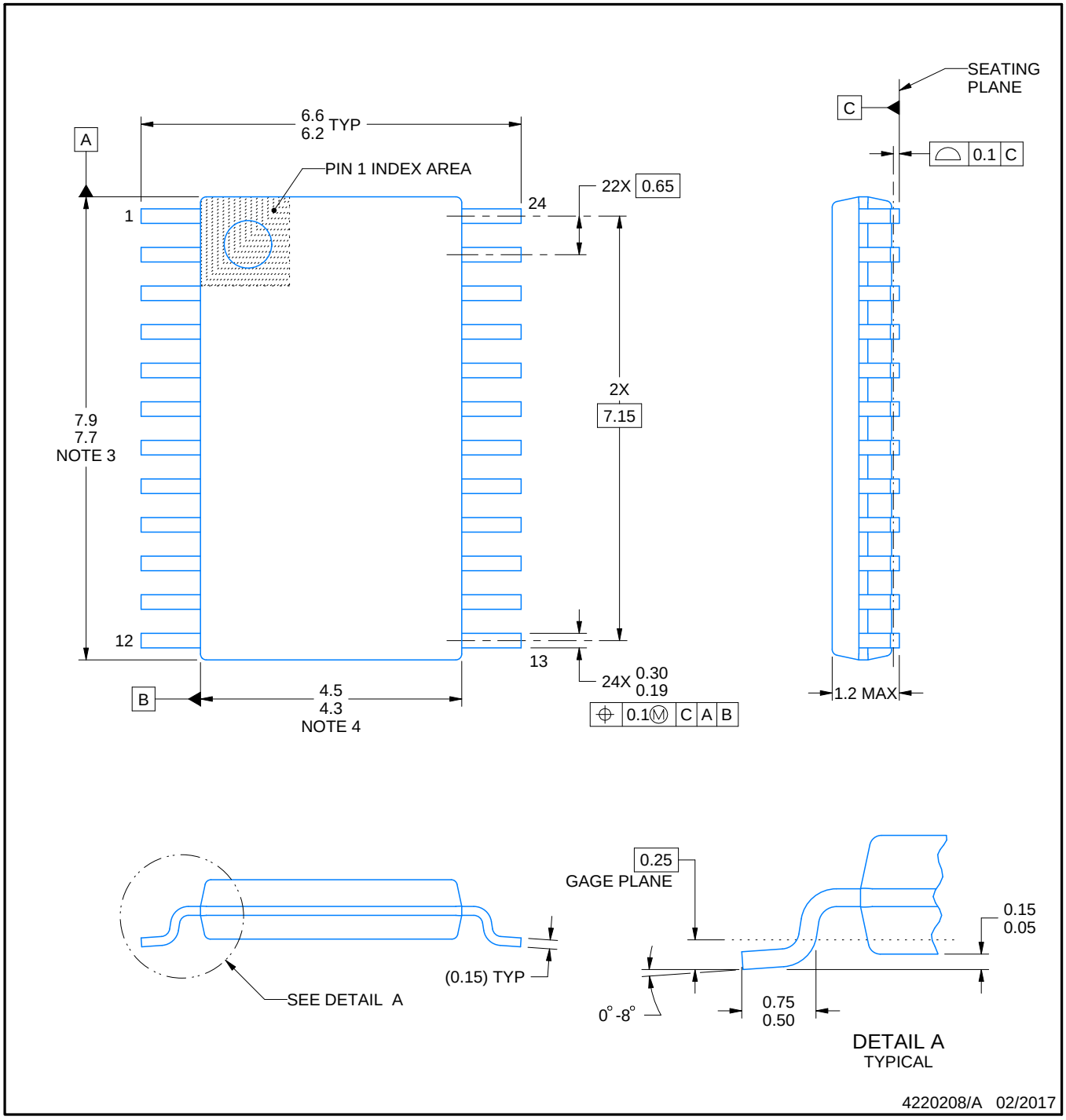

NOTES:

1. All linear dimensions are in millimeters. Any dimensions in parenthesis are for reference only. Dimensioning and tolerancing per ASME Y14.5M.
2. This drawing is subject to change without notice.
3. This dimension does not include mold flash, protrusions, or gate burrs. Mold flash, protrusions, or gate burrs shall not exceed 0.15 mm per side.
4. This dimension does not include interlead flash. Interlead flash shall not exceed 0.25 mm per side.
5. Reference JEDEC registration MO-153.

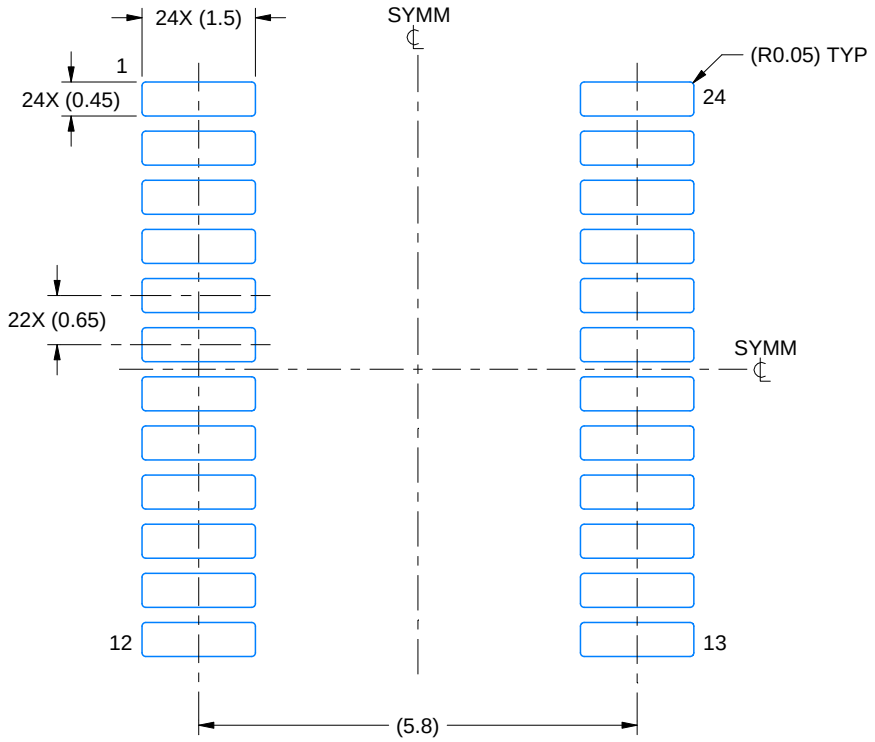

LAND PATTERN EXAMPLE
EXPOSED METAL SHOWN
SCALE: 10X

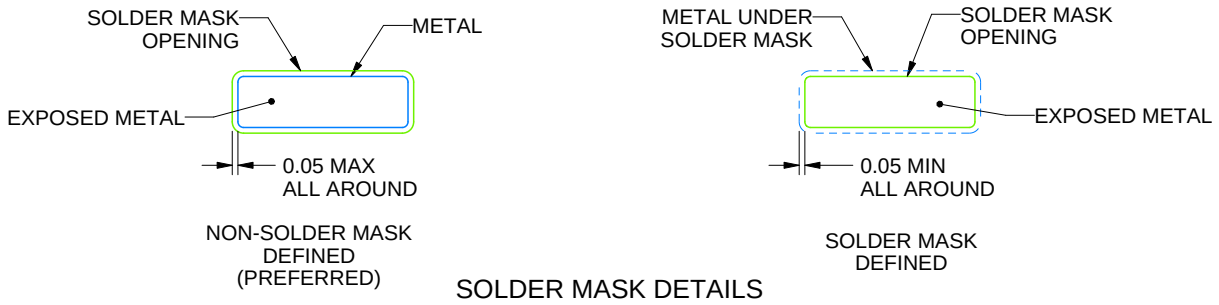

SOLDER MASK DETAILS

4220208/A 02/2017

NOTES: (continued)

6. Publication IPC-7351 may have alternate designs.
7. Solder mask tolerances between and around signal pads can vary based on board fabrication site.

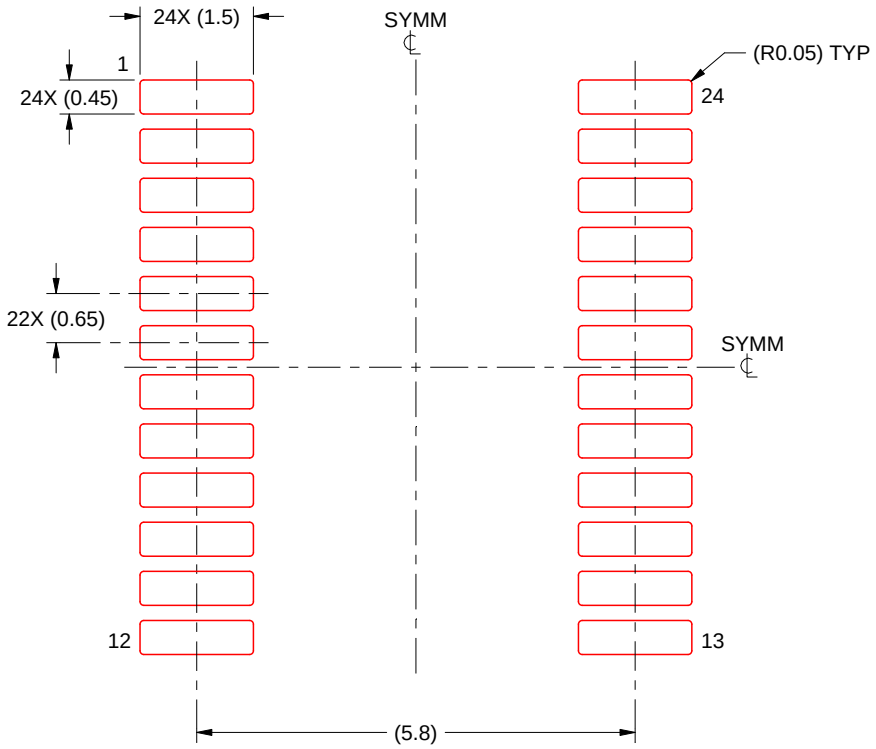

SOLDER PASTE EXAMPLE
BASED ON 0.125 mm THICK STENCIL
SCALE: 10X

4220208/A 02/2017

NOTES: (continued)

8. Laser cutting apertures with trapezoidal walls and rounded corners may offer better paste release. IPC-7525 may have alternate design recommendations.
9. Board assembly site may have different recommendations for stencil design.

IMPORTANT NOTICE AND DISCLAIMER

TI PROVIDES TECHNICAL AND RELIABILITY DATA (INCLUDING DATASHEETS), DESIGN RESOURCES (INCLUDING REFERENCE DESIGNS), APPLICATION OR OTHER DESIGN ADVICE, WEB TOOLS, SAFETY INFORMATION, AND OTHER RESOURCES “AS IS” AND WITH ALL FAULTS, AND DISCLAIMS ALL WARRANTIES, EXPRESS AND IMPLIED, INCLUDING WITHOUT LIMITATION ANY IMPLIED WARRANTIES OF MERCHANTABILITY, FITNESS FOR A PARTICULAR PURPOSE OR NON-INFRINGEMENT OF THIRD PARTY INTELLECTUAL PROPERTY RIGHTS.

These resources are intended for skilled developers designing with TI products. You are solely responsible for (1) selecting the appropriate TI products for your application, (2) designing, validating and testing your application, and (3) ensuring your application meets applicable standards, and any other safety, security, regulatory or other requirements.

These resources are subject to change without notice. TI grants you permission to use these resources only for development of an application that uses the TI products described in the resource. Other reproduction and display of these resources is prohibited. No license is granted to any other TI intellectual property right or to any third party intellectual property right. TI disclaims responsibility for, and you fully indemnify TI and its representatives against any claims, damages, costs, losses, and liabilities arising out of your use of these resources.

TI’s products are provided subject to TI’s Terms of Sale, TI’s General Quality Guidelines, or other applicable terms available either on ti.com or provided in conjunction with such TI products. TI’s provision of these resources does not expand or otherwise alter TI’s applicable warranties or warranty disclaimers for TI products. Unless TI explicitly designates a product as custom or customer-specified, TI products are standard, catalog, general purpose devices.

TI objects to and rejects any additional or different terms you may propose.

Copyright © 2025, Texas Instruments Incorporated

Last updated 10/2025