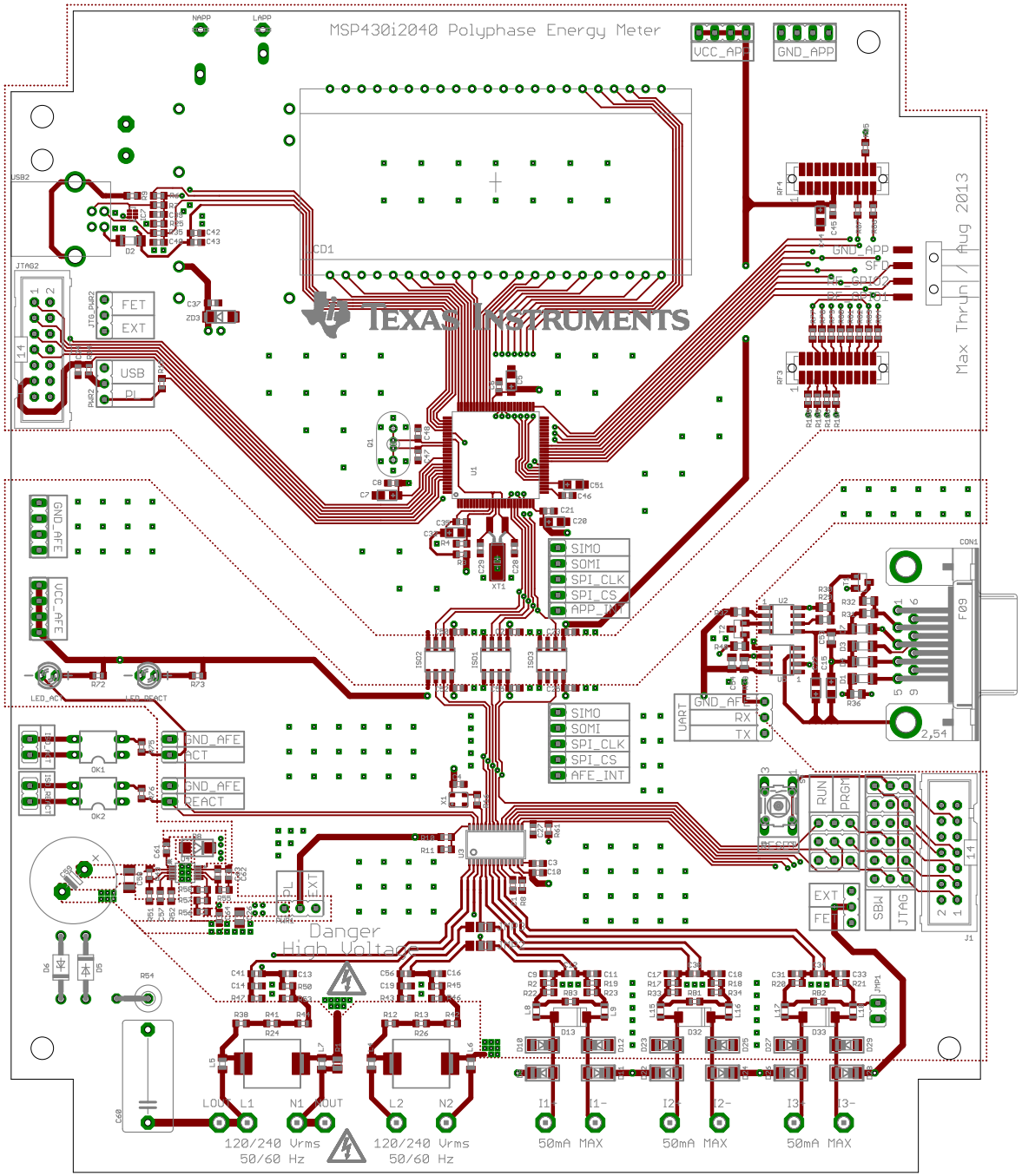
MSP430i2040 Polyphase Energy Meter
VCC_APP
GND_APP
NAPP
LAPP
USB2
JTAG2
FET
EXT
USB
PI
CD1
TEXAS INSTRUMENTS
GND_APP
SPI
GND_AFE
VCC_AFE
SIMO
SOMI
SPI_CLK
SPI_CS
APP_INT
AFE_INT
ISO1
ISO2
ISO3
LED_AC
LED_REACT
GND_AFE
ACT
REACT
UART
RX
TX
CON1
F09
2,54
RUN
PRGM
SBW
JTAG
J1
Danger
High Voltage
LOUT
L1
N1
NOUT
L2
N2
120/240 Vrms
50/60 Hz
I1+
I1-
I2+
I2-
I3+
I3-
50mA MAX
Max Thrun / Aug 2013