TAPE AND REEL INFORMATION

REEL DIMENSIONS

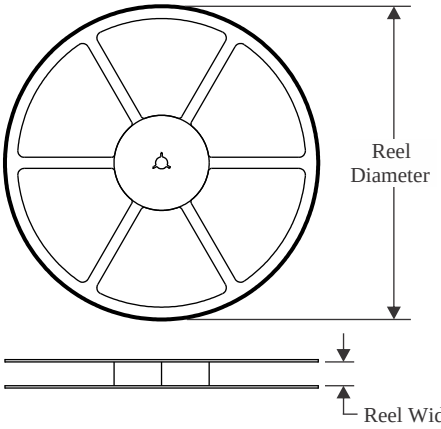

TAPE DIMENSIONS

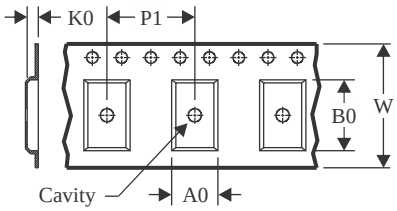

A0	Dimension designed to accommodate the component width
B0	Dimension designed to accommodate the component length
K0	Dimension designed to accommodate the component thickness
W	Overall width of the carrier tape
P1	Pitch between successive cavity centers

QUADRANT ASSIGNMENTS FOR PIN 1 ORIENTATION IN TAPE

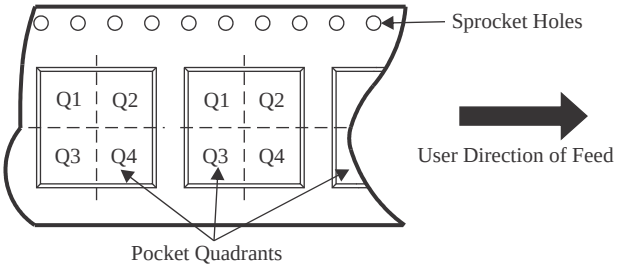

*All dimensions are nominal

Device	Package Type	Package Drawing	Pins	SPQ	Reel Diameter (mm)	Reel Width W1 (mm)	A0 (mm)	B0 (mm)	K0 (mm)	P1 (mm)	W (mm)	Pin1 Quadrant
LM5050MK-1/NOPB	SOT-23-THIN	DDC	6	1000	178.0	8.4	3.2	3.2	1.4	4.0	8.0	Q3
LM5050MKX-1/NOPB	SOT-23-THIN	DDC	6	3000	178.0	8.4	3.2	3.2	1.4	4.0	8.0	Q3
LM5050Q0MK-1/NOPB	SOT-23-THIN	DDC	6	1000	178.0	8.4	3.2	3.2	1.4	4.0	8.0	Q3
LM5050Q0MKX-1/NOPB	SOT-23-THIN	DDC	6	3000	178.0	8.4	3.2	3.2	1.4	4.0	8.0	Q3
LM5050Q1MK-1/NOPB	SOT-23-THIN	DDC	6	1000	178.0	8.4	3.2	3.2	1.4	4.0	8.0	Q3
LM5050Q1MKX-1/NOPB	SOT-23-THIN	DDC	6	3000	178.0	8.4	3.2	3.2	1.4	4.0	8.0	Q3

TAPE AND REEL BOX DIMENSIONS

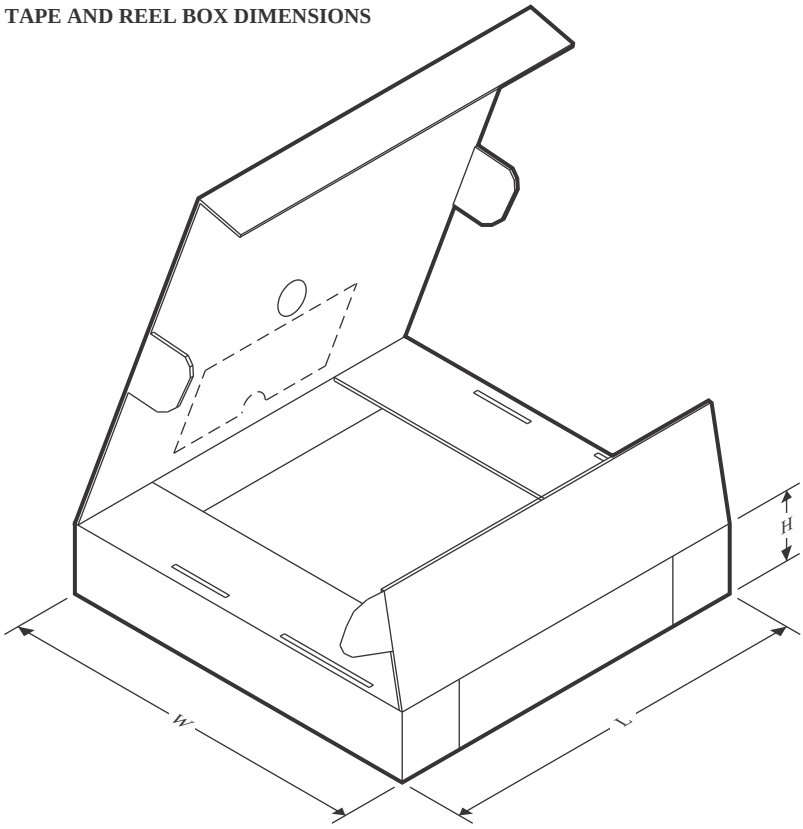

*All dimensions are nominal

Device	Package Type	Package Drawing	Pins	SPQ	Length (mm)	Width (mm)	Height (mm)
LM5050MK-1/NOPB	SOT-23-THIN	DDC	6	1000	208.0	191.0	35.0
LM5050MKX-1/NOPB	SOT-23-THIN	DDC	6	3000	208.0	191.0	35.0
LM5050Q0MK-1/NOPB	SOT-23-THIN	DDC	6	1000	208.0	191.0	35.0
LM5050Q0MKX-1/NOPB	SOT-23-THIN	DDC	6	3000	208.0	191.0	35.0
LM5050Q1MK-1/NOPB	SOT-23-THIN	DDC	6	1000	208.0	191.0	35.0
LM5050Q1MKX-1/NOPB	SOT-23-THIN	DDC	6	3000	208.0	191.0	35.0