TAPE AND REEL INFORMATION

REEL DIMENSIONS

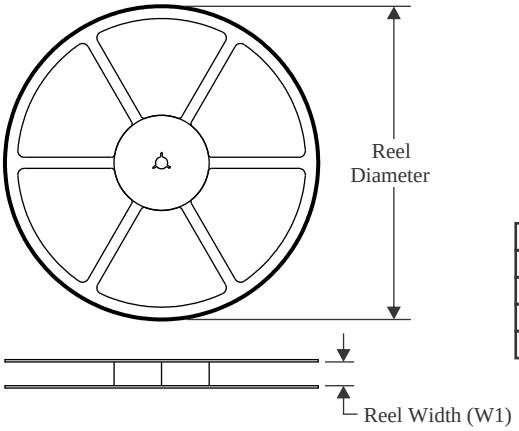

TAPE DIMENSIONS

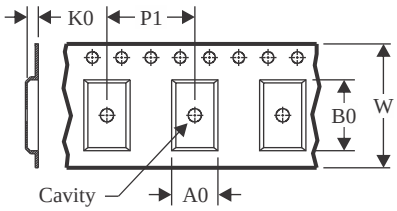

A0	Dimension designed to accommodate the component width
B0	Dimension designed to accommodate the component length
K0	Dimension designed to accommodate the component thickness
W	Overall width of the carrier tape
P1	Pitch between successive cavity centers

QUADRANT ASSIGNMENTS FOR PIN 1 ORIENTATION IN TAPE

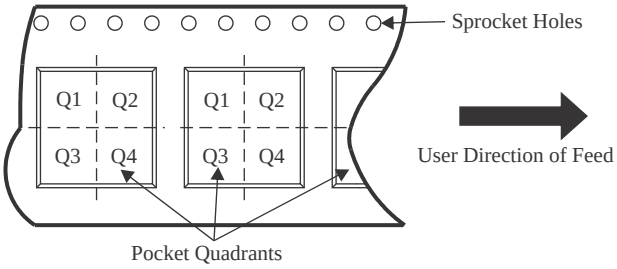

*All dimensions are nominal

Device	Package Type	Package Drawing	Pins	SPQ	Reel Diameter (mm)	Reel Width W1 (mm)	A0 (mm)	B0 (mm)	K0 (mm)	P1 (mm)	W (mm)	Pin1 Quadrant
LM76002RNPR	WQFN	RNP	30	3000	330.0	12.4	4.3	6.3	1.1	8.0	12.0	Q1
LM76002RNPT	WQFN	RNP	30	250	180.0	12.4	4.25	6.25	1.15	8.0	12.0	Q1
LM76002RNPT	WQFN	RNP	30	250	180.0	12.4	4.3	6.3	1.1	8.0	12.0	Q1
LM76003RNPR	WQFN	RNP	30	3000	330.0	12.4	4.3	6.3	1.1	8.0	12.0	Q1
LM76003RNPT	WQFN	RNP	30	250	180.0	12.4	4.3	6.3	1.1	8.0	12.0	Q1
LM76003RNPT	WQFN	RNP	30	250	180.0	12.4	4.25	6.25	1.15	8.0	12.0	Q1

TAPE AND REEL BOX DIMENSIONS

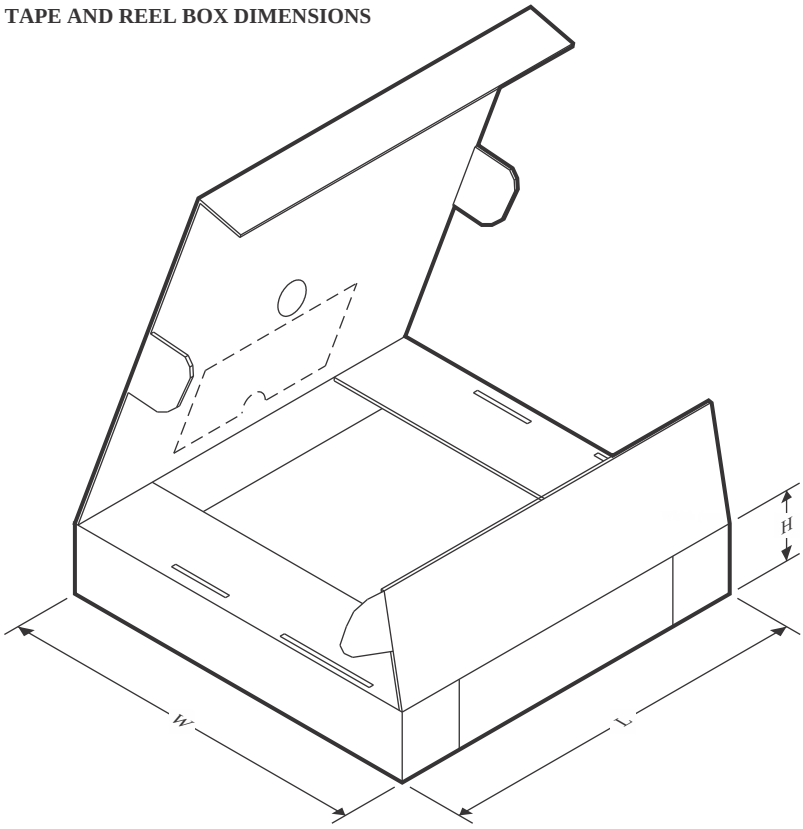

*All dimensions are nominal

Device	Package Type	Package Drawing	Pins	SPQ	Length (mm)	Width (mm)	Height (mm)
LM76002RNPR	WQFN	RNP	30	3000	367.0	367.0	35.0
LM76002RNPT	WQFN	RNP	30	250	213.0	191.0	35.0
LM76002RNPT	WQFN	RNP	30	250	210.0	185.0	35.0
LM76003RNPR	WQFN	RNP	30	3000	367.0	367.0	35.0
LM76003RNPT	WQFN	RNP	30	250	210.0	185.0	35.0
LM76003RNPT	WQFN	RNP	30	250	213.0	191.0	35.0