TAPE AND REEL INFORMATION

REEL DIMENSIONS

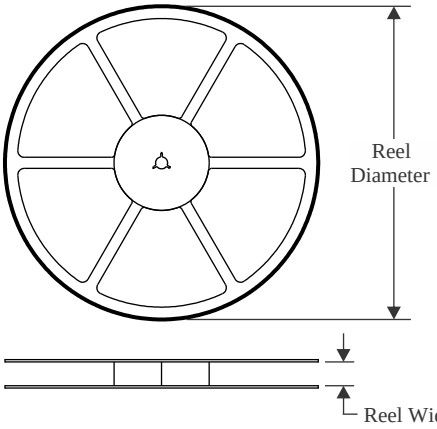

TAPE DIMENSIONS

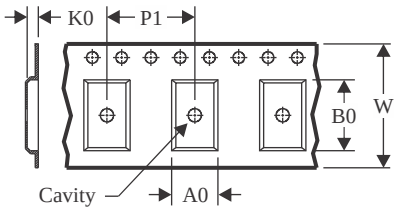

A0	Dimension designed to accommodate the component width
B0	Dimension designed to accommodate the component length
K0	Dimension designed to accommodate the component thickness
W	Overall width of the carrier tape
P1	Pitch between successive cavity centers

QUADRANT ASSIGNMENTS FOR PIN 1 ORIENTATION IN TAPE

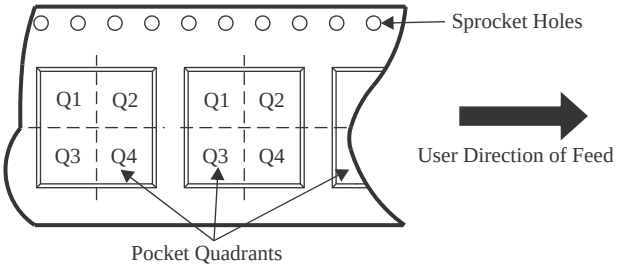

*All dimensions are nominal

Device	Package Type	Package Drawing	Pins	SPQ	Reel Diameter (mm)	Reel Width W1 (mm)	A0 (mm)	B0 (mm)	K0 (mm)	P1 (mm)	W (mm)	Pin1 Quadrant
MSP430FR5870IPMR	LQFP	PM	64	1000	330.0	24.4	13.0	13.0	2.1	16.0	24.0	Q2
MSP430FR5870IRGCR	VQFN	RGC	64	2000	330.0	16.4	9.3	9.3	1.1	12.0	16.0	Q2
MSP430FR58721IPMR	LQFP	PM	64	1000	330.0	24.4	13.0	13.0	2.1	16.0	24.0	Q2
MSP430FR58721IRGCR	VQFN	RGC	64	2000	330.0	16.4	9.3	9.3	1.1	12.0	16.0	Q2
MSP430FR5872IPMR	LQFP	PM	64	1000	330.0	24.4	13.0	13.0	2.1	16.0	24.0	Q2
MSP430FR5872IRGCR	VQFN	RGC	64	2000	330.0	16.4	9.3	9.3	1.1	12.0	16.0	Q2
MSP430FR59221IG56R	TSSOP	DGG	56	2000	330.0	24.4	8.6	15.6	1.8	12.0	24.0	Q1
MSP430FR59221IPMR	LQFP	PM	64	1000	330.0	24.4	13.0	13.0	2.1	16.0	24.0	Q2
MSP430FR59221IRGCR	VQFN	RGC	64	2000	330.0	16.4	9.3	9.3	1.1	12.0	16.0	Q2
MSP430FR5922IG56R	TSSOP	DGG	56	2000	330.0	24.4	8.6	15.6	1.8	12.0	24.0	Q1
MSP430FR5922IPMR	LQFP	PM	64	1000	330.0	24.4	13.0	13.0	2.1	16.0	24.0	Q2
MSP430FR5922IRGCR	VQFN	RGC	64	2000	330.0	16.4	9.3	9.3	1.1	12.0	16.0	Q2
MSP430FR5970IPMR	LQFP	PM	64	1000	330.0	24.4	13.0	13.0	2.1	16.0	24.0	Q2
MSP430FR5970IRGCR	VQFN	RGC	64	2000	330.0	16.4	9.3	9.3	1.1	12.0	16.0	Q2
MSP430FR59721IPMR	LQFP	PM	64	1000	330.0	24.4	13.0	13.0	2.1	16.0	24.0	Q2
MSP430FR59721IRGCR	VQFN	RGC	64	2000	330.0	16.4	9.3	9.3	1.1	12.0	16.0	Q2

Device	Package Type	Package Drawing	Pins	SPQ	Reel Diameter (mm)	Reel Width W1 (mm)	A0 (mm)	B0 (mm)	K0 (mm)	P1 (mm)	W (mm)	Pin1 Quadrant
MSP430FR5972IPMR	LQFP	PM	64	1000	330.0	24.4	13.0	13.0	2.1	16.0	24.0	Q2
MSP430FR5972IRGCR	VQFN	RGC	64	2000	330.0	16.4	9.3	9.3	1.1	12.0	16.0	Q2

TAPE AND REEL BOX DIMENSIONS

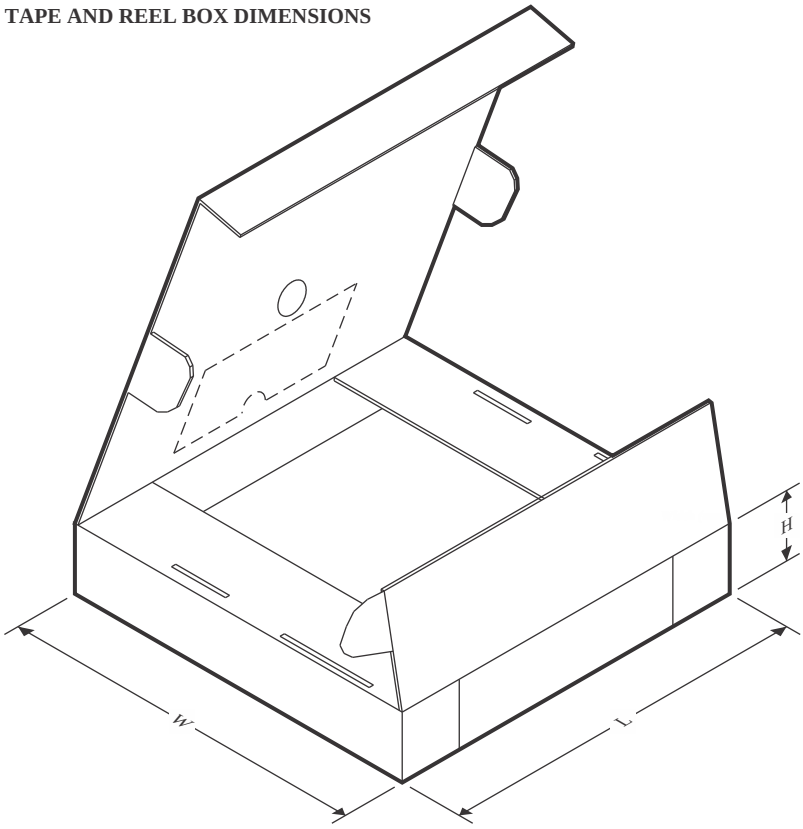

*All dimensions are nominal

Device	Package Type	Package Drawing	Pins	SPQ	Length (mm)	Width (mm)	Height (mm)
MSP430FR5870IPMR	LQFP	PM	64	1000	336.6	336.6	41.3
MSP430FR5870IRGCR	VQFN	RGC	64	2000	367.0	367.0	38.0
MSP430FR58721IPMR	LQFP	PM	64	1000	336.6	336.6	41.3
MSP430FR58721IRGCR	VQFN	RGC	64	2000	367.0	367.0	38.0
MSP430FR5872IPMR	LQFP	PM	64	1000	336.6	336.6	41.3
MSP430FR5872IRGCR	VQFN	RGC	64	2000	367.0	367.0	38.0
MSP430FR59221IG56R	TSSOP	DGG	56	2000	350.0	350.0	43.0
MSP430FR59221IPMR	LQFP	PM	64	1000	336.6	336.6	41.3
MSP430FR59221IRGCR	VQFN	RGC	64	2000	367.0	367.0	38.0
MSP430FR5922IG56R	TSSOP	DGG	56	2000	350.0	350.0	43.0
MSP430FR5922IPMR	LQFP	PM	64	1000	336.6	336.6	41.3
MSP430FR5922IRGCR	VQFN	RGC	64	2000	367.0	367.0	38.0
MSP430FR5970IPMR	LQFP	PM	64	1000	336.6	336.6	41.3
MSP430FR5970IRGCR	VQFN	RGC	64	2000	367.0	367.0	38.0
MSP430FR59721IPMR	LQFP	PM	64	1000	336.6	336.6	41.3
MSP430FR59721IRGCR	VQFN	RGC	64	2000	367.0	367.0	38.0
MSP430FR5972IPMR	LQFP	PM	64	1000	336.6	336.6	41.3
MSP430FR5972IRGCR	VQFN	RGC	64	2000	367.0	367.0	38.0

TRAY

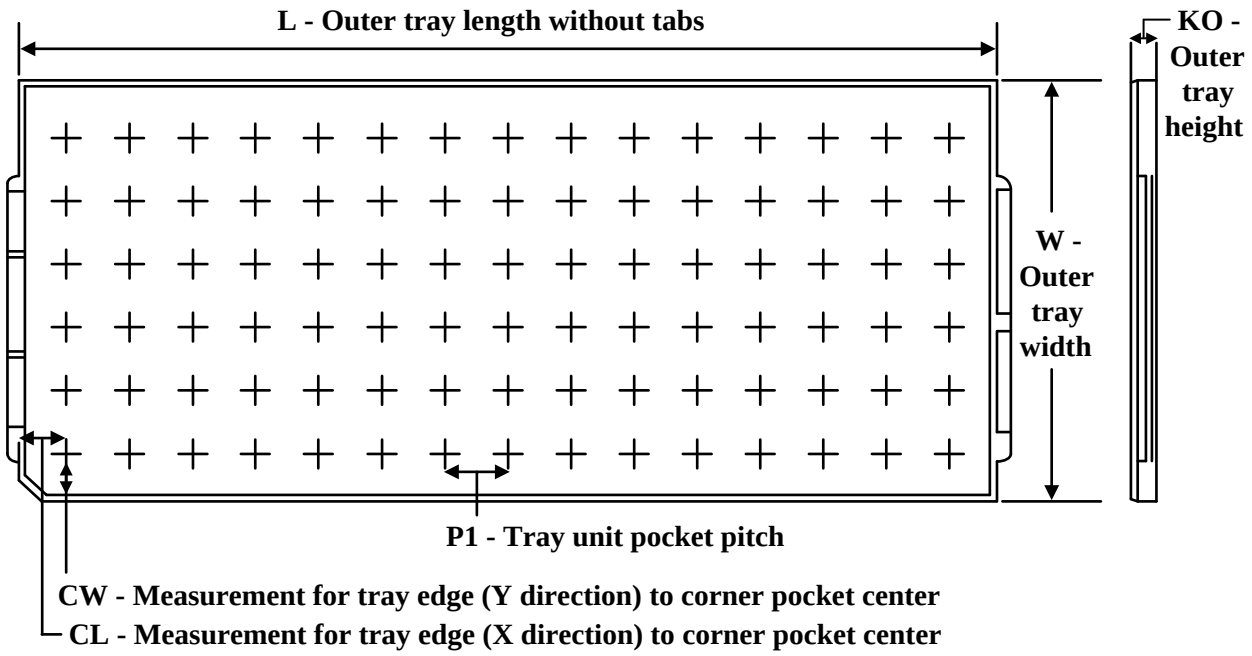

Chamfer on Tray corner indicates Pin 1 orientation of packed units.

*All dimensions are nominal

Device	Package Name	Package Type	Pins	SPQ	Unit array matrix	Max temperature (°C)	L (mm)	W (mm)	K0 (µm)	P1 (mm)	CL (mm)	CW (mm)
MSP430FR5922IPM	PM	LQFP	64	160	8 X 20	150	315	135.9	7620	15.2	13.1	13
MSP430FR59721IPM	PM	LQFP	64	160	8 X 20	150	315	135.9	7620	15.2	13.1	13
MSP430FR5972IPM	PM	LQFP	64	160	8 X 20	150	315	135.9	7620	15.2	13.1	13