TAPE AND REEL INFORMATION

REEL DIMENSIONS

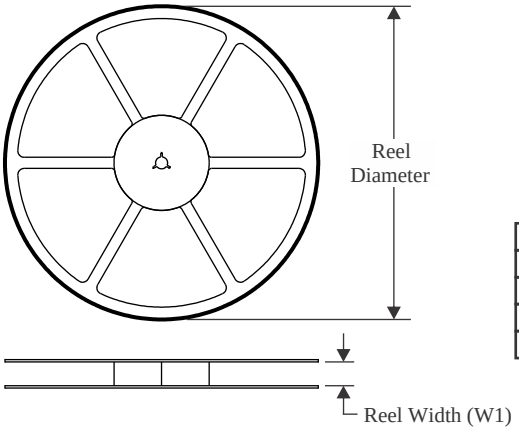

TAPE DIMENSIONS

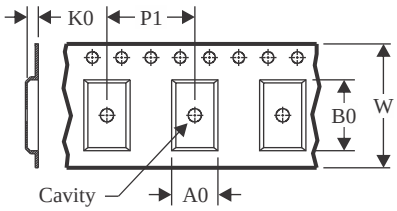

A0	Dimension designed to accommodate the component width
B0	Dimension designed to accommodate the component length
K0	Dimension designed to accommodate the component thickness
W	Overall width of the carrier tape
P1	Pitch between successive cavity centers

QUADRANT ASSIGNMENTS FOR PIN 1 ORIENTATION IN TAPE

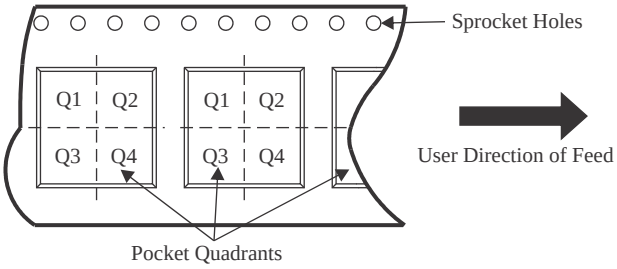

*All dimensions are nominal

Device	Package Type	Package Drawing	Pins	SPQ	Reel Diameter (mm)	Reel Width W1 (mm)	A0 (mm)	B0 (mm)	K0 (mm)	P1 (mm)	W (mm)	Pin1 Quadrant
74AHCT1G08DBVRG4	SOT-23	DBV	5	3000	178.0	9.0	3.23	3.17	1.37	4.0	8.0	Q3
74AHCT1G08DCKRE4	SC70	DCK	5	3000	178.0	9.0	2.4	2.5	1.2	4.0	8.0	Q3
SN74AHCT1G08DBVR	SOT-23	DBV	5	3000	180.0	8.4	3.23	3.17	1.37	4.0	8.0	Q3
SN74AHCT1G08DBVR	SOT-23	DBV	5	3000	178.0	9.0	3.3	3.2	1.4	4.0	8.0	Q3
SN74AHCT1G08DCKR	SC70	DCK	5	3000	180.0	8.4	2.3	2.5	1.2	4.0	8.0	Q3
SN74AHCT1G08DRLR	SOT-5X3	DRL	5	4000	180.0	8.4	1.98	1.78	0.69	4.0	8.0	Q3

TAPE AND REEL BOX DIMENSIONS

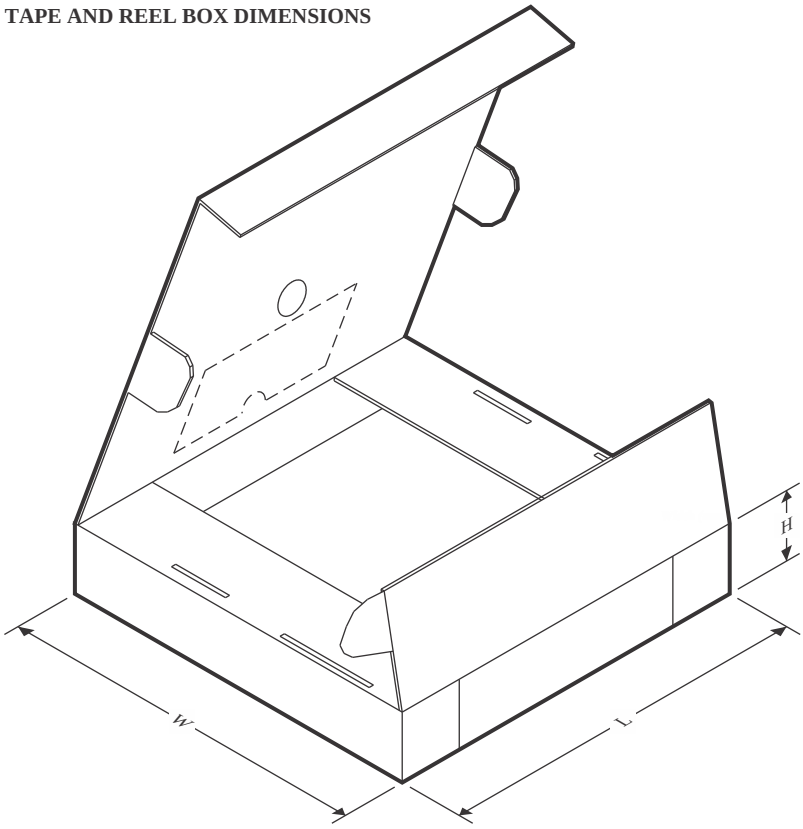

*All dimensions are nominal

Device	Package Type	Package Drawing	Pins	SPQ	Length (mm)	Width (mm)	Height (mm)
74AHCT1G08DBVRG4	SOT-23	DBV	5	3000	180.0	180.0	18.0
74AHCT1G08DCKRE4	SC70	DCK	5	3000	180.0	180.0	18.0
SN74AHCT1G08DBVR	SOT-23	DBV	5	3000	202.0	201.0	28.0
SN74AHCT1G08DBVR	SOT-23	DBV	5	3000	180.0	180.0	18.0
SN74AHCT1G08DCKR	SC70	DCK	5	3000	210.0	185.0	35.0
SN74AHCT1G08DRLR	SOT-5X3	DRL	5	4000	202.0	201.0	28.0