TAPE AND REEL INFORMATION

REEL DIMENSIONS

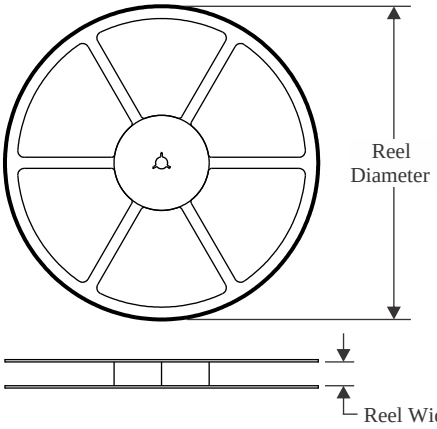

TAPE DIMENSIONS

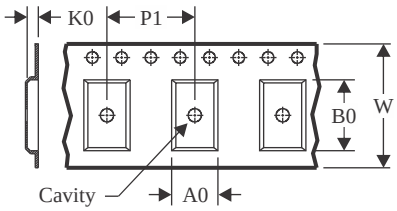

A0	Dimension designed to accommodate the component width
B0	Dimension designed to accommodate the component length
K0	Dimension designed to accommodate the component thickness
W	Overall width of the carrier tape
P1	Pitch between successive cavity centers

QUADRANT ASSIGNMENTS FOR PIN 1 ORIENTATION IN TAPE

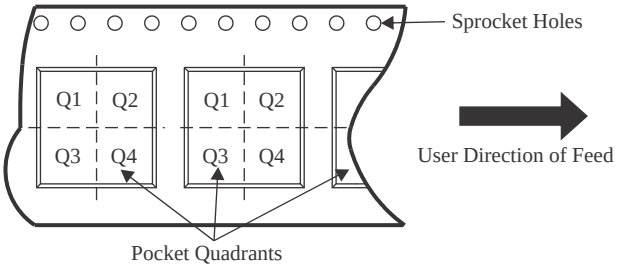

*All dimensions are nominal

Device	Package Type	Package Drawing	Pins	SPQ	Reel Diameter (mm)	Reel Width W1 (mm)	A0 (mm)	B0 (mm)	K0 (mm)	P1 (mm)	W (mm)	Pin1 Quadrant
TLV1701AIDBVR	SOT-23	DBV	5	3000	180.0	8.4	3.2	3.2	1.4	4.0	8.0	Q3
TLV1701AIDBVR	SOT-23	DBV	5	3000	180.0	8.4	3.2	3.2	1.4	4.0	8.0	Q3
TLV1701AIDBVT	SOT-23	DBV	5	250	180.0	8.4	3.2	3.2	1.4	4.0	8.0	Q3
TLV1701AIDBVT	SOT-23	DBV	5	250	180.0	8.4	3.2	3.2	1.4	4.0	8.0	Q3
TLV1701AIDCKR	SC70	DCK	5	3000	178.0	9.0	2.4	2.5	1.2	4.0	8.0	Q3
TLV1701AIDCKT	SC70	DCK	5	250	178.0	9.0	2.4	2.5	1.2	4.0	8.0	Q3
TLV1701AIDRLR	SOT-5X3	DRL	5	4000	180.0	8.4	1.98	1.78	0.69	4.0	8.0	Q3
TLV1701AIDRLT	SOT-5X3	DRL	5	250	180.0	8.4	1.98	1.78	0.69	4.0	8.0	Q3
TLV1702AIDGKR	VSSOP	DGK	8	2500	330.0	12.4	5.3	3.4	1.4	8.0	12.0	Q1
TLV1702AIRUGR	X2QFN	RUG	8	3000	180.0	8.4	1.6	1.6	0.66	4.0	8.0	Q2
TLV1704AIPWR	TSSOP	PW	14	2000	330.0	12.4	6.9	5.6	1.6	8.0	12.0	Q1

TAPE AND REEL BOX DIMENSIONS

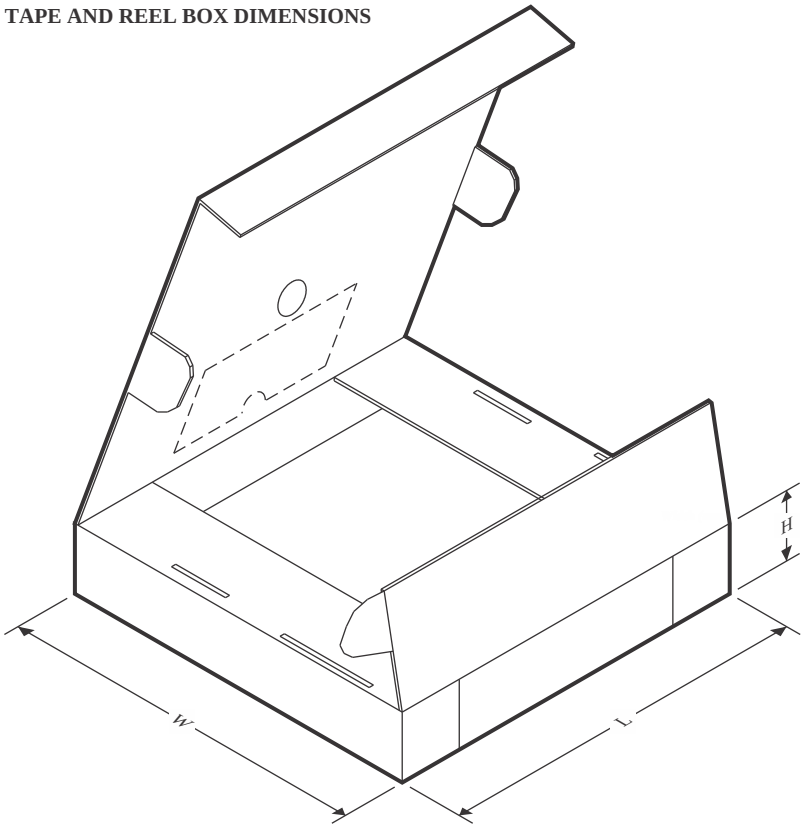

*All dimensions are nominal

Device	Package Type	Package Drawing	Pins	SPQ	Length (mm)	Width (mm)	Height (mm)
TLV1701AIDBVR	SOT-23	DBV	5	3000	210.0	185.0	35.0
TLV1701AIDBVR	SOT-23	DBV	5	3000	210.0	185.0	35.0
TLV1701AIDBVT	SOT-23	DBV	5	250	210.0	185.0	35.0
TLV1701AIDBVT	SOT-23	DBV	5	250	210.0	185.0	35.0
TLV1701AIDCKR	SC70	DCK	5	3000	190.0	190.0	30.0
TLV1701AIDCKT	SC70	DCK	5	250	190.0	190.0	30.0
TLV1701AIDRLR	SOT-5X3	DRL	5	4000	202.0	201.0	28.0
TLV1701AIDRLT	SOT-5X3	DRL	5	250	202.0	201.0	28.0
TLV1702AIDGKR	VSSOP	DGK	8	2500	353.0	353.0	32.0
TLV1702AIRUGR	X2QFN	RUG	8	3000	202.0	201.0	28.0
TLV1704AIPWR	TSSOP	PW	14	2000	356.0	356.0	35.0

TUBE

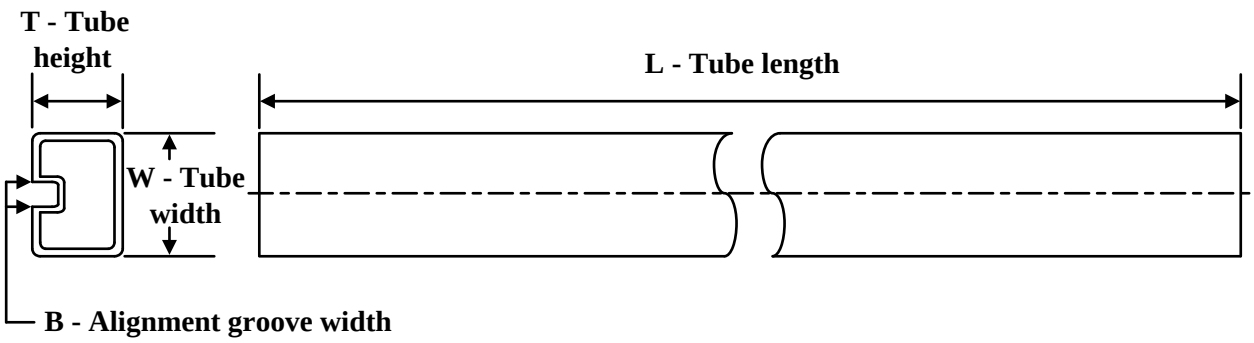

*All dimensions are nominal

Device	Package Name	Package Type	Pins	SPQ	L (mm)	W (mm)	T (µm)	B (mm)
TLV1702AIDGK	DGK	VSSOP	8	80	330	6.55	500	2.88
TLV1704AIPW	PW	TSSOP	14	90	530	10.2	3600	3.5