TAPE AND REEL INFORMATION

REEL DIMENSIONS

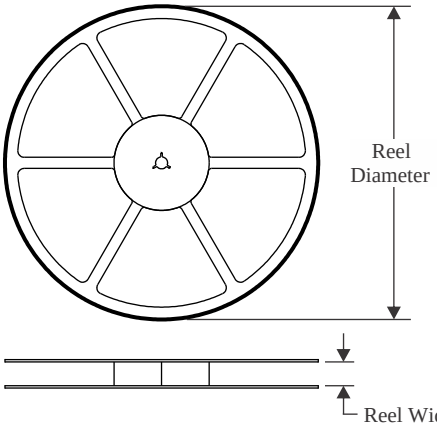

TAPE DIMENSIONS

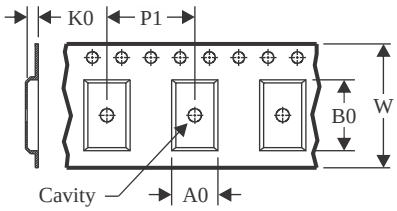

A0	Dimension designed to accommodate the component width
B0	Dimension designed to accommodate the component length
K0	Dimension designed to accommodate the component thickness
W	Overall width of the carrier tape
P1	Pitch between successive cavity centers

QUADRANT ASSIGNMENTS FOR PIN 1 ORIENTATION IN TAPE

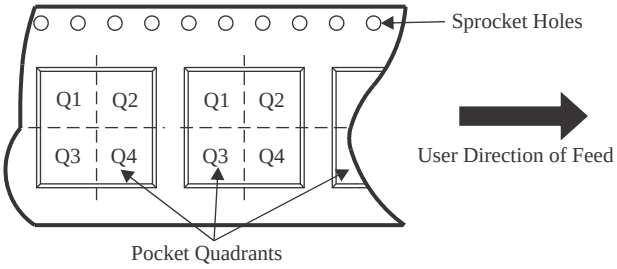

*All dimensions are nominal

Device	Package Type	Package Drawing	Pins	SPQ	Reel Diameter (mm)	Reel Width W1 (mm)	A0 (mm)	B0 (mm)	K0 (mm)	P1 (mm)	W (mm)	Pin1 Quadrant
TLV4021R1YKAR	DSBGA	YKA	4	3000	180.0	8.4	0.84	0.84	0.48	4.0	8.0	Q1
TLV4021R2YKAR	DSBGA	YKA	4	3000	180.0	8.4	0.84	0.84	0.48	4.0	8.0	Q1
TLV4021S5MYKAR	DSBGA	YKA	4	3000	180.0	8.4	0.84	0.84	0.48	4.0	8.0	Q1
TLV4021S5YKAR	DSBGA	YKA	4	3000	180.0	8.4	0.84	0.84	0.48	4.0	8.0	Q1
TLV4021S5YKAR	DSBGA	YKA	4	3000	180.0	8.4	0.84	0.84	0.48	4.0	8.0	Q1
TLV4031R1YKAR	DSBGA	YKA	4	3000	180.0	8.4	0.84	0.84	0.48	4.0	8.0	Q1
TLV4031R2YKAR	DSBGA	YKA	4	3000	180.0	8.4	0.84	0.84	0.48	4.0	8.0	Q1
TLV4041R1YKAR	DSBGA	YKA	4	3000	180.0	8.4	0.84	0.84	0.48	4.0	8.0	Q1
TLV4041R2YKAR	DSBGA	YKA	4	3000	180.0	8.4	0.84	0.84	0.48	4.0	8.0	Q1
TLV4041R5DBVR	SOT-23	DBV	5	3000	178.0	9.0	2.4	2.5	1.2	4.0	8.0	Q3
TLV4041R5YKAR	DSBGA	YKA	4	3000	180.0	8.4	0.84	0.84	0.48	4.0	8.0	Q1
TLV4051R1YKAR	DSBGA	YKA	4	3000	180.0	8.4	0.84	0.84	0.48	4.0	8.0	Q1
TLV4051R2DBVR	SOT-23	DBV	5	3000	178.0	9.0	3.3	3.2	1.4	4.0	8.0	Q3
TLV4051R2YKAR	DSBGA	YKA	4	3000	180.0	8.4	0.84	0.84	0.48	4.0	8.0	Q1
TLV4051R5DBVR	SOT-23	DBV	5	3000	178.0	9.0	2.4	2.5	1.2	4.0	8.0	Q3

TAPE AND REEL BOX DIMENSIONS

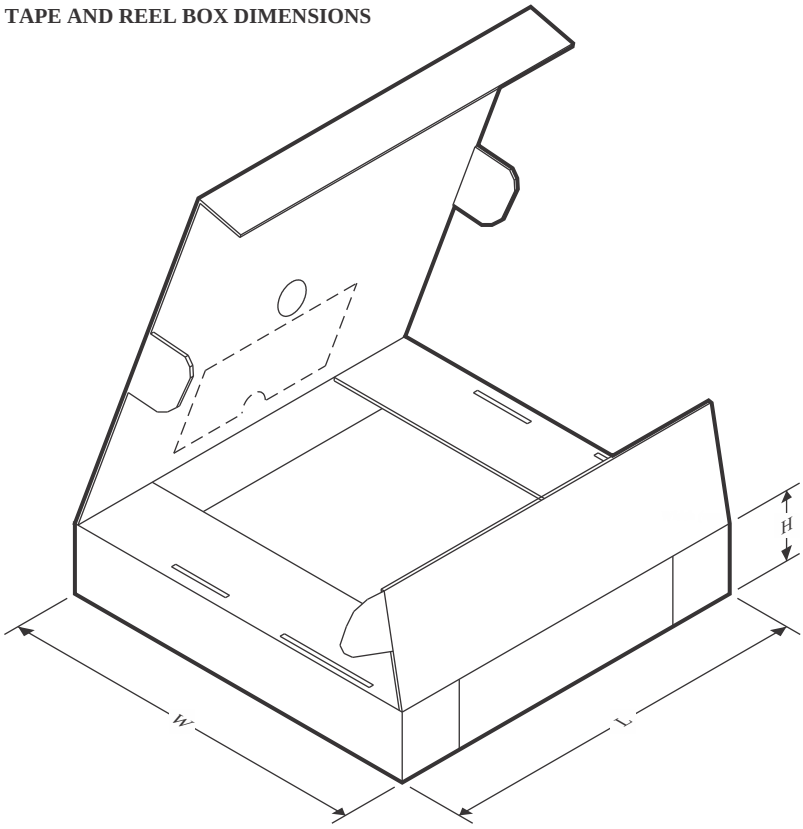

*All dimensions are nominal

Device	Package Type	Package Drawing	Pins	SPQ	Length (mm)	Width (mm)	Height (mm)
TLV4021R1YKAR	DSBGA	YKA	4	3000	182.0	182.0	20.0
TLV4021R2YKAR	DSBGA	YKA	4	3000	182.0	182.0	20.0
TLV4021S5MYKAR	DSBGA	YKA	4	3000	182.0	182.0	20.0
TLV4021S5YKAR	DSBGA	YKA	4	3000	182.0	182.0	20.0
TLV4021S5YKAR	DSBGA	YKA	4	3000	182.0	182.0	20.0
TLV4031R1YKAR	DSBGA	YKA	4	3000	182.0	182.0	20.0
TLV4031R2YKAR	DSBGA	YKA	4	3000	182.0	182.0	20.0
TLV4041R1YKAR	DSBGA	YKA	4	3000	182.0	182.0	20.0
TLV4041R2YKAR	DSBGA	YKA	4	3000	182.0	182.0	20.0
TLV4041R5DBVR	SOT-23	DBV	5	3000	180.0	180.0	18.0
TLV4041R5YKAR	DSBGA	YKA	4	3000	182.0	182.0	20.0
TLV4051R1YKAR	DSBGA	YKA	4	3000	182.0	182.0	20.0
TLV4051R2DBVR	SOT-23	DBV	5	3000	180.0	180.0	18.0
TLV4051R2YKAR	DSBGA	YKA	4	3000	182.0	182.0	20.0
TLV4051R5DBVR	SOT-23	DBV	5	3000	180.0	180.0	18.0