SN74LVC1G86 Single 2-Input Exclusive-OR Gate

1 Features

- ESD Protection Exceeds JESD 22
  - 2000-V Human-Body Model (A114-A)
  - 1000-V Charged-Device Model (C101)
- Qualified from –40°C to +125°C
- Supports 5-V V_{CC} Operation
- Inputs Are Over Voltage Tolerant up to 5.5 V
- Supports Down Translation to V_{CC}
- Maximum t_{pd} of 4 ns at 3.3 V and 15-pF load
- Low Power Consumption, 10-µA Maximum I_{CC} At 85°C
- ±24-mA Output Drive at 3.3 V
- I_{off} Supports Partial-Power-Down Mode, and Back-Drive Protection
- Available in the Texas Instruments NanoFree™ Package
- Latch-Up Performance Exceeds 100 mA Per JESD 78, Class II

2 Applications

- Wireless Headsets
- Motor Drives and Controls
- TVs
- Set-Top Boxes
- Audio

3 Description

The SN74LVC1G86 device performs the Boolean function $Y = \overline{A}B + A\overline{B}$ in positive logic. This single 2-input exclusive-OR gate is designed for 1.65-V to 5.5-V V_{CC} operation.

If the input is low, the other input is reproduced in true form at the output. If the input is high, the signal on the other input is reproduced inverted at the output. This device has low power consumption with maximum t_{pd} of 4 ns at 3.3 V and 15-pF capacitive load. The maximum output drive is ±32-mA at 4.5 V and ±24-mA at 3.3 V.

This device is fully specified for partial-power-down applications using I_{off}. The I_{off} circuitry disables the outputs, preventing damaging current back flow through the device when it is powered down.

Device Information(1)

PART NUMBER	PACKAGE	BODY SIZE (NOM)
SN74LVC1G86DBV	SOT-23 (5)	2.90 mm × 1.60 mm
SN74LVC1G86DCK	SC70 (5)	2.00 mm × 1.25 mm
SN74LVC1G86DRL	SOT (5)	1.60 mm × 1.20 mm
SN74LVC1G86YZP	DSBGA (5)	1.44 mm × 0.94 mm

(1) For all available packages, see the orderable addendum at the end of the data sheet.

Functional Block Diagram

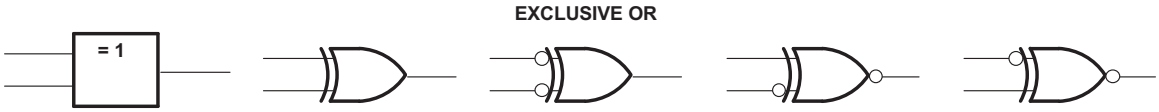

Copyright © 2017, Texas Instruments Incorporated

An exclusive-OR gate has many applications, some of which can be represented better by alternative logic symbols.

These are five equivalent exclusive-OR symbols valid for an SN74LVC1G86 gate in positive logic; negation may be shown at any two ports.

An IMPORTANT NOTICE at the end of this data sheet addresses availability, warranty, changes, use in safety-critical applications, intellectual property matters and other important disclaimers. PRODUCTION DATA.

Table of Contents

1 Features ... 1
2 Applications ... 1
3 Description ... 1
4 Revision History ... 2
5 Pin Configuration and Functions ... 3
6 Specifications ... 4
6.1 Absolute Maximum Ratings ... 4
6.2 ESD Ratings ... 4
6.3 Recommended Operating Conditions ... 4
6.4 Thermal Information ... 5
6.5 Electrical Characteristics ... 5
6.6 Switching Characteristics, C_L = 15 pF ... 6
6.7 Switching Characteristics, C_L = 30 pF or 50 pF ... 6
6.8 Operating Characteristics ... 6
6.9 Typical Characteristics ... 6
7 Parameter Measurement Information ... 7
8 Detailed Description ... 8
8.1 Overview ... 8
8.2 Functional Block Diagram ... 8
8.3 Feature Description ... 8
8.4 Function Table ... 9
9 Application and Implementation ... 10
9.1 Application Information ... 10
9.2 Typical Application ... 10
10 Power Supply Recommendations ... 11
11 Layout ... 12
11.1 Layout Guidelines ... 12
11.2 Layout Example ... 12
12 Device and Documentation Support ... 13
12.1 Receiving Notification of Documentation Updates 13
12.2 Community Resources ... 13
12.3 Trademarks ... 13
12.4 Electrostatic Discharge Caution ... 13
12.5 Glossary ... 13
13 Mechanical, Packaging, and Orderable Information ... 13

4 Revision History

NOTE: Page numbers for previous revisions may differ from page numbers in the current version.

Changes from Revision P (September 2015) to Revision Q	Page
• Changed YZP (DSBGA) package pinout diagram and added DSBGA column	3
• Added *Balanced High-Drive CMOS Push-Pull Outputs*, *Standard CMOS Inputs*, *Clamp Diodes*, *Partial Power Down* (I_{off}), and *Over-voltage Tolerant Inputs* sections	8

Changes from Revision O (December 2013) to Revision P	Page
• Added *Applications* section, *Device Information* table, *ESD Ratings* table, *Thermal Information* table, *Typical Characteristics* section, *Feature Description* section, *Device Functional Modes*, *Application and Implementation* section, *Power Supply Recommendations* section, *Layout* section, *Device and Documentation Support* section, and *Mechanical, Packaging, and Orderable Information* section	1

Changes from Revision N (January 2007) to Revision O	Page
• Updated document to new TI data sheet format.	1
• Removed *Ordering Information* table.	1
• Updated I_{off} in *Features*.	1
• Updated operating temperature range.	4

Copyright © 1999–2017, Texas Instruments Incorporated

5 Pin Configuration and Functions

DBV Package
5-Pin SOT-23
Top View

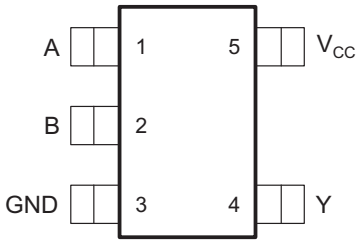

DCK Package
5-Pin SC70
Top View

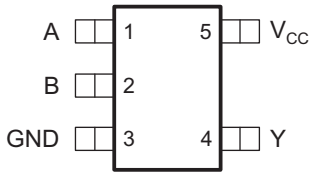

DRL Package
5-Pin SOT
Top View

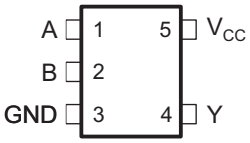

YZP Package
5-Pin DSBGA
Bottom View

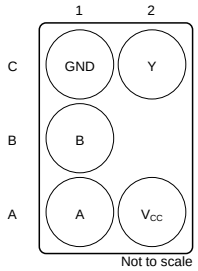

Pin Functions[(1)]

PIN			I/O	DESCRIPTION
NAME	DBV, DRL, DCK	DSBGA		
A	1	A1	I	Input A
B	2	B1	I	Input B
GND	3	C1	—	Ground
V_{CC}	5	A2	—	Positive Supply
Y	4	C2	O	Output Y

(1) See mechanical drawings for dimensions.

6 Specifications

6.1 Absolute Maximum Ratings

over operating free-air temperature range (unless otherwise noted)[1]

			MIN	MAX	UNIT
V_{CC}	Supply voltage		–0.5	6.5	V
V_I	Input voltage[2]		–0.5	6.5	V
V_O	Voltage applied to any output in the high-impedance or power-off state[2]		–0.5	6.5	V
V_O	Voltage applied to any output in the high or low state[2][3]		–0.5	V_{CC} + 0.5	V
I_{IK}	Input clamp current	$V_I < 0$		–50	mA
I_{OK}	Output clamp current	$V_O < 0$		–50	mA
I_O	Continuous output current			±50	mA
	Continuous current through V_{CC} or GND			±100	mA
T_J	Junction temperature			150	°C
T_{stg}	Storage temperature		–65	150	°C

(1) Stresses beyond those listed under *Absolute Maximum Ratings* may cause permanent damage to the device. These are stress ratings only, and functional operation of the device at these or any other conditions beyond those indicated under *Recommended Operating Conditions* is not implied. Exposure to absolute-maximum-rated conditions for extended periods may affect device reliability.
(2) The input negative-voltage and output voltage ratings may be exceeded if the input and output clamp-current ratings are observed.
(3) The value of V_{CC} is provided in the *Recommended Operating Conditions* table.

6.2 ESD Ratings

			VALUE	UNIT
$V_{(ESD)}$	Electrostatic discharge	Human body model (HBM), per ANSI/ESDA/JEDEC JS-001[1]	2000	V
		Charged-device model (CDM), per JEDEC specification JESD22-C101[2]	1000	

(1) JEDEC document JEP155 states that 500-V HBM allows safe manufacturing with a standard ESD control process.
(2) JEDEC document JEP157 states that 250-V CDM allows safe manufacturing with a standard ESD control process.

6.3 Recommended Operating Conditions

over operating free-air temperature range (unless otherwise noted)[1]

			MIN	MAX	UNIT
V_{CC}	Supply voltage	Operating	1.65	5.5	V
		Data retention only	1.5		
V_{IH}	High-level input voltage	V_{CC} = 1.65 V to 1.95 V	0.65 × V_{CC}		V
		V_{CC} = 2.3 V to 2.7 V	1.7		
		V_{CC} = 3 V to 3.6 V	2		
		V_{CC} = 4.5 V to 5.5 V	0.7 × V_{CC}		
V_{IL}	Low-level input voltage	V_{CC} = 1.65 V to 1.95 V		0.35 × V_{CC}	V
		V_{CC} = 2.3 V to 2.7 V		0.7	
		V_{CC} = 3 V to 3.6 V		0.8	
		V_{CC} = 4.5 V to 5.5 V		0.3 × V_{CC}	
V_I	Input voltage		0	5.5	V
V_O	Output voltage		0	V_{CC}	V
I_{OH}	High-level output current	V_{CC} = 1.65 V		–4	mA
		V_{CC} = 2.3 V		–8	
		V_{CC} = 3 V		–16	
				–24	
		V_{CC} = 4.5 V		–32	

(1) All unused inputs of the device must be held at V_{CC} or GND to ensure proper device operation. See *Implications of Slow or Floating CMOS Inputs*, SCBA004.

Copyright © 1999–2017, Texas Instruments Incorporated

Recommended Operating Conditions (continued)

over operating free-air temperature range (unless otherwise noted)[1]

		MIN	MAX	UNIT
I_{OL} Low-level output current	V_{CC} = 1.65 V		4	mA
	V_{CC} = 2.3 V		8	
	V_{CC} = 3 V		16	
			24	
	V_{CC} = 4.5 V		32	
$\Delta t/\Delta v$ Input transition rise or fall rate	V_{CC} = 1.8 V ± 0.15 V, 2.5 V ± 0.2 V		20	ns/V
	V_{CC} = 3.3 V ± 0.3 V		10	
	V_{CC} = 5 V ± 0.5 V		5	
T_A Operating free-air temperature	YZP package	–40	85	°C
	DCK, DBV, and DRL packages	–40	125	

6.4 Thermal Information

THERMAL METRIC[1]	SN74LVC1G86			UNIT
	DBV (SOT-23)	DCK (SC70)	YZP (DSBGA)	
	5 PINS	5 PINS	5 PINS	
$R_{\theta JA}$ Junction-to-ambient thermal resistance	206	252	132	°C/W

(1) For more information about traditional and new thermal metrics, see the *Semiconductor and IC Package Thermal Metrics* application report.

6.5 Electrical Characteristics

over recommended operating free-air temperature range (unless otherwise noted)

PARAMETER	TEST CONDITIONS			V_{CC}	MIN	TYP[1]	MAX	UNIT
V_{OH}	I_{OH} = –100 µA			1.65 V to 5.5 V	V_{CC} – 0.1			V
	I_{OH} = –4 mA			1.65 V	1.2			
	I_{OH} = –8 mA			2.3 V	1.9			
	I_{OH} = –16 mA			3 V	2.4			
	I_{OH} = –24 mA				2.3			
	I_{OH} = –32 mA			4.5 V	3.8			
V_{OL}	I_{OL} = 100 µA			1.65 V to 5.5 V			0.1	V
	I_{OL} = 4 mA			1.65 V			0.45	
	I_{OL} = 8 mA			2.3 V			0.3	
	I_{OL} = 16 mA			3 V			0.4	
	I_{OL} = 24 mA						0.55	
	I_{OL} = 32 mA			4.5 V			0.55	
I_I A or B input	V_I = 5.5 V or GND			0 to 5.5 V			±5	µA
I_{off}	V_I or V_O = 5.5 V			0			±10	µA
I_{CC}	V_I = V_{CC} or GND,	I_O = 0	–40°C to 85°C	1.65 V to 5.5 V			10	µA
			–40°C to 125°C				15	
ΔI_{CC}	One input at V_{CC} – 0.6 V, Other inputs at V_{CC} or GND			3 V to 5.5 V			500	µA
C_i	V_I = V_{CC} or GND			3.3 V		6		pF

(1) All typical values are at V_{CC} = 3.3 V, T_A = 25°C.

6.6 Switching Characteristics, C_L = 15 pF

over recommended operating free-air temperature range (unless otherwise noted) (see Figure 2)

PARAMETER	FROM (INPUT)	TO (OUTPUT)	TEST CONDITIONS	V_{CC} = 1.8 V ± 0.15 V		V_{CC} = 2.5 V ± 0.2 V		V_{CC} = 3.3 V ± 0.3 V		V_{CC} = 5 V ± 0.5 V		UNIT
				MIN	MAX	MIN	MAX	MIN	MAX	MIN	MAX	
t_{pd}	A or B	Y	T_A = –40°C to +85°C	2.1	9.1	1	4.5	0.6	4	0.8	3.3	ns

6.7 Switching Characteristics, C_L = 30 pF or 50 pF

over recommended operating free-air temperature range (unless otherwise noted)

PARAMETER	FROM (INPUT)	TO (OUTPUT)	TEST CONDITIONS	V_{CC} = 1.8 V ± 0.15 V		V_{CC} = 2.5 V ± 0.2 V		V_{CC} = 3.3 V ± 0.3 V		V_{CC} = 5 V ± 0.5 V		UNIT
				MIN	MAX	MIN	MAX	MIN	MAX	MIN	MAX	
t_{pd}	A or B	Y	–40°C to +85°C temperature range, see Figure 2	3.5	9.9	1.8	5.5	1.3	5	1	4	ns
			–40°C to +125°C temperature range, see Figure 2	3.5	12	1.8	7	1.3	6	1	5	

6.8 Operating Characteristics

T_A = 25°C

PARAMETER		TEST CONDITIONS	V_{CC} = 1.8 V	V_{CC} = 2.5 V	V_{CC} = 3.3 V	V_{CC} = 5 V	UNIT
			TYP	TYP	TYP	TYP	
C_{pd}	Power dissipation capacitance	f = 10 MHz	22	22	22	24	pF

6.9 Typical Characteristics

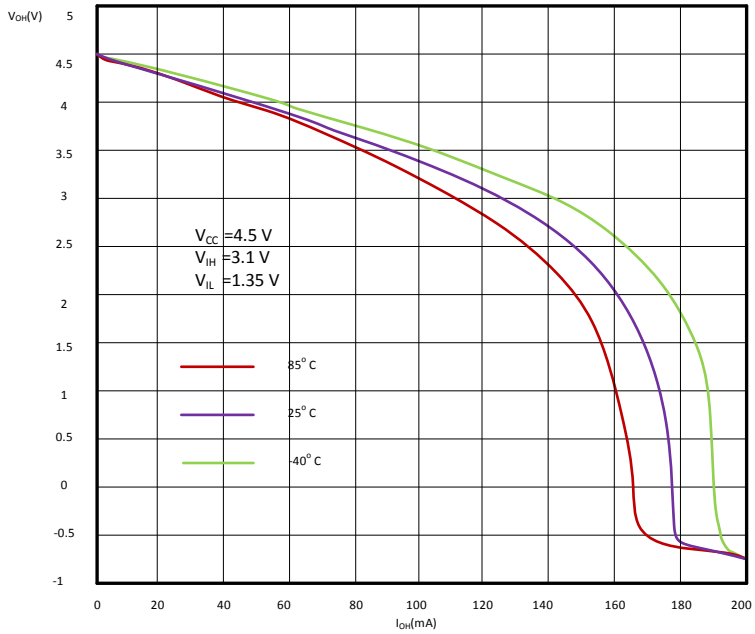

Figure 1. V_{oh} vs I_{oh} at 4.5 V

Copyright © 1999–2017, Texas Instruments Incorporated

7 Parameter Measurement Information

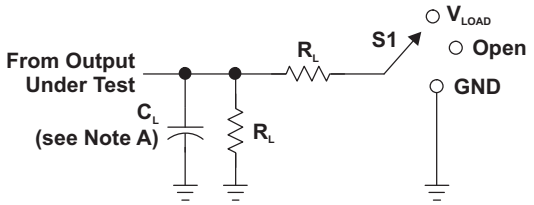

LOAD CIRCUIT

TEST	S1
t_{PLH}/t_{PHL}	Open
t_{PLZ}/t_{PZL}	V_{LOAD}
t_{PHZ}/t_{PZH}	GND

V_{CC}	INPUTS		V_M	V_{LOAD}	C_L	R_L	V_D
	V_I	t_r/t_f					
1.8 V ± 0.15 V	V_{CC}	≤2 ns	$V_{CC}/2$	2 × V_{CC}	15 pF	1 MΩ	0.15 V
2.5 V ± 0.2 V	V_{CC}	≤2 ns	$V_{CC}/2$	2 × V_{CC}	15 pF	1 MΩ	0.15 V
3.3 V ± 0.3 V	3 V	≤2.5 ns	1.5 V	6 V	15 pF	1 MΩ	0.3 V
5 V ± 0.5 V	V_{CC}	≤2.5 ns	$V_{CC}/2$	2 × V_{CC}	15 pF	1 MΩ	0.3 V

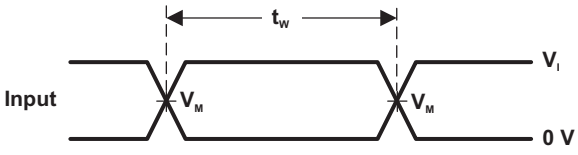

VOLTAGE WAVEFORMS
PULSE DURATION

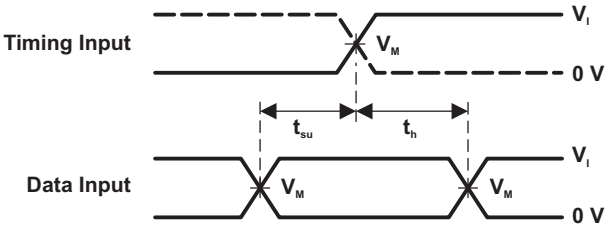

VOLTAGE WAVEFORMS
SETUP AND HOLD TIMES

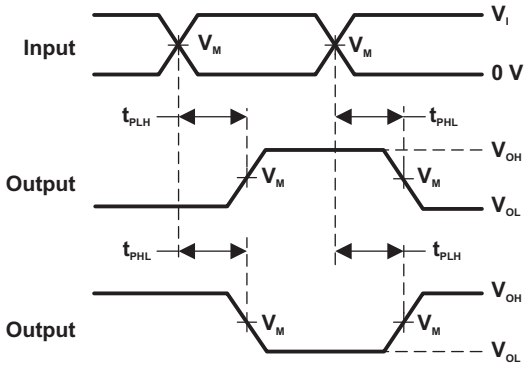

VOLTAGE WAVEFORMS
PROPAGATION DELAY TIMES
INVERTING AND NONINVERTING OUTPUTS

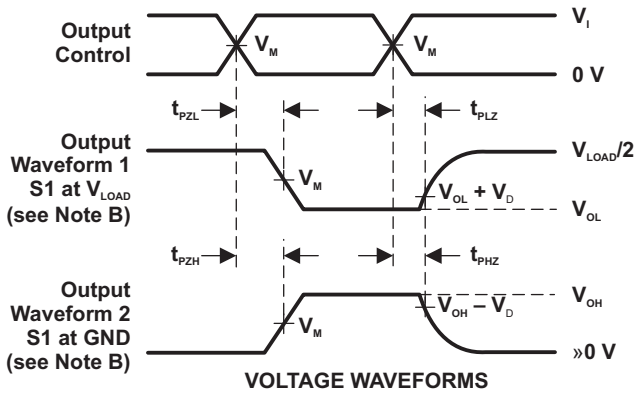

VOLTAGE WAVEFORMS
ENABLE AND DISABLE TIMES
LOW- AND HIGH-LEVEL ENABLING

NOTES: A. C_L includes probe and jig capacitance.
B. Waveform 1 is for an output with internal conditions such that the output is low, except when disabled by the output control. Waveform 2 is for an output with internal conditions such that the output is high, except when disabled by the output control.
C. All input pulses are supplied by generators having the following characteristics: PRR ≤ 10 MHz, Z_O = 50 Ω.
D. The outputs are measured one at a time, with one transition per measurement.
E. t_{PLZ} and t_{PHZ} are the same as t_{dis}.
F. t_{PZL} and t_{PZH} are the same as t_{en}.
G. t_{PLH} and t_{PHL} are the same as t_{pd}.
H. All parameters and waveforms are not applicable to all devices.

Figure 2. Load Circuit and Voltage Waveforms

8 Detailed Description

8.1 Overview

The SN74LVC1G86 device performs the Boolean function $Y = \overline{A}B + A\overline{B}$ in positive logic. This single 2-input exclusive-OR gate is designed for 1.65-V to 5.5-V V_{CC} operation.

A common application is as a true and complement element. If the input is low, the other input is reproduced in true form at the output. If the input is high, the signal on the other input is reproduced inverted at the output.

NanoFree package technology is a major breakthrough in IC packaging concepts, using the die as the package. This device is fully specified for partial-power-down applications using I_{off}. The I_{off} circuitry disables the outputs, preventing damaging current backflow through the device when it is powered down.

8.2 Functional Block Diagram

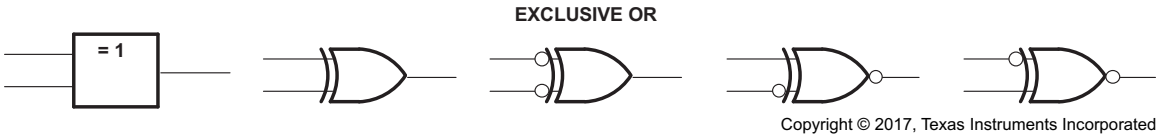

Copyright © 2017, Texas Instruments Incorporated

These are five equivalent exclusive-OR symbols valid for an SN74LVC1G86 gate in positive logic; negation may be shown at any two ports.

8.3 Feature Description

8.3.1 Balanced High-Drive CMOS Push-Pull Outputs

A balanced output allows the device to sink and source similar currents. The high drive capability of this device creates fast edges into light loads so routing and load conditions should be considered to prevent ringing. Additionally, the outputs of this device are capable of driving larger currents than the device can sustain without being damaged. It is important for the power output of the device to be limited to avoid thermal runaway and damage due to over-current. The electrical and thermal limits defined the in the *Absolute Maximum Ratings* must be followed at all times.

8.3.2 Standard CMOS Inputs

Standard CMOS inputs are high impedance and are typically modeled as a resistor in parallel with the input capacitance given in the *Electrical Characteristics*. The worst case resistance is calculated with the maximum input voltage, given in the *Recommended Operating Conditions*, and the maximum input leakage current, given in the *Electrical Characteristics*, using ohm's law (R = V ÷ I).

Signals applied to the inputs need to have fast edge rates, as defined by $\Delta t/\Delta v$ in *Recommended Operating Conditions* to avoid excessive currents and oscillations. If tolerance to a slow or noisy input signal is required, a device with a Schmitt-trigger input should be utilized to condition the input signal prior to the standard CMOS input.

Copyright © 1999–2017, Texas Instruments Incorporated

Feature Description (continued)

8.3.3 Clamp Diodes

The inputs and outputs to this device have negative clamping diodes.

CAUTION

Avoid any voltage below or above the input or output voltage specified in the *Absolute Maximum Ratings*. In this event, the current must be limited to the maximum input or output clamp current value indicated in the *Absolute Maximum Ratings* to avoid damage to the device.

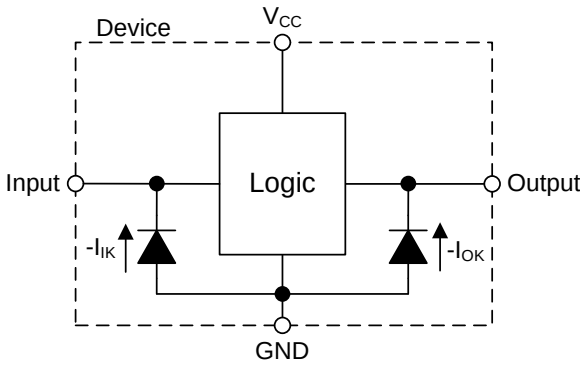

Figure 3. Electrical Placement of Clamping Diodes for Each Input and Output

8.3.4 Partial Power Down (I_{off})

The inputs and outputs for this device enter a high impedance state when the supply voltage is 0 V. The maximum leakage into or out of any input or output pin on the device is specified by I_{off} in the *Electrical Characteristics*.

8.3.5 Over-voltage Tolerant Inputs

Input signals to this device can be driven above the supply voltage so long as they remain below the maximum input voltage value specified in the *Recommended Operating Conditions*.

8.4 Function Table

Table 1 lists the functional modes of the SN74LVC1G86 device.

Table 1. Function Table

INPUTS		OUTPUT
A	B	Y
L	L	L
L	H	H
H	L	H
H	H	L

9 Application and Implementation

NOTE

Information in the following applications sections is not part of the TI component specification, and TI does not warrant its accuracy or completeness. TI's customers are responsible for determining suitability of components for their purposes. Customers should validate and test their design implementation to confirm system functionality.

9.1 Application Information

The SN74LVC1G86 device can accept input voltages up to 5.5 V at any valid V_{CC} which makes the device suitable for down translation. This feature of the SN74LVC1G86 makes it ideal for various bus interface applications.

9.2 Typical Application

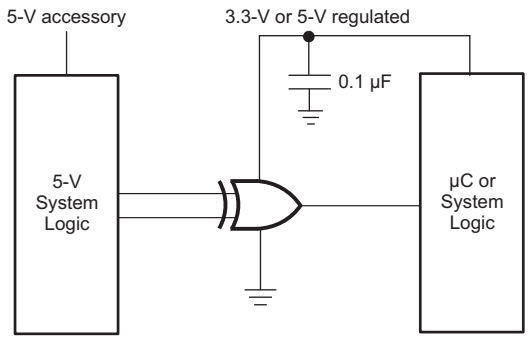

Figure 4. Typical Application Schematic

9.2.1 Design Requirements

This device uses CMOS technology and has balanced output drive. Take care to avoid bus contention because it can drive currents that would exceed maximum limits. The high drive will also create fast edges into light loads, so routing and load conditions should be considered to prevent ringing.

9.2.2 Detailed Design Procedure

1. Recommended Input Conditions
   - For rise time and fall time specifications, see $\Delta t/\Delta V$ in the *Recommended Operating Conditions* table.
   - For specified High and low levels, see V_{IH} and V_{IL} in the *Recommended Operating Conditions* table.
   - Inputs are overvoltage tolerant allowing them to go as high as 5.5 V at any valid V_{CC}.
2. Recommended Output Conditions
   - Load currents should not exceed 32 mA per output and 50 mA total for the part.
   - Outputs should not be pulled above V_{CC}.

Copyright © 1999–2017, Texas Instruments Incorporated

Typical Application (continued)

9.2.3 Application Curve

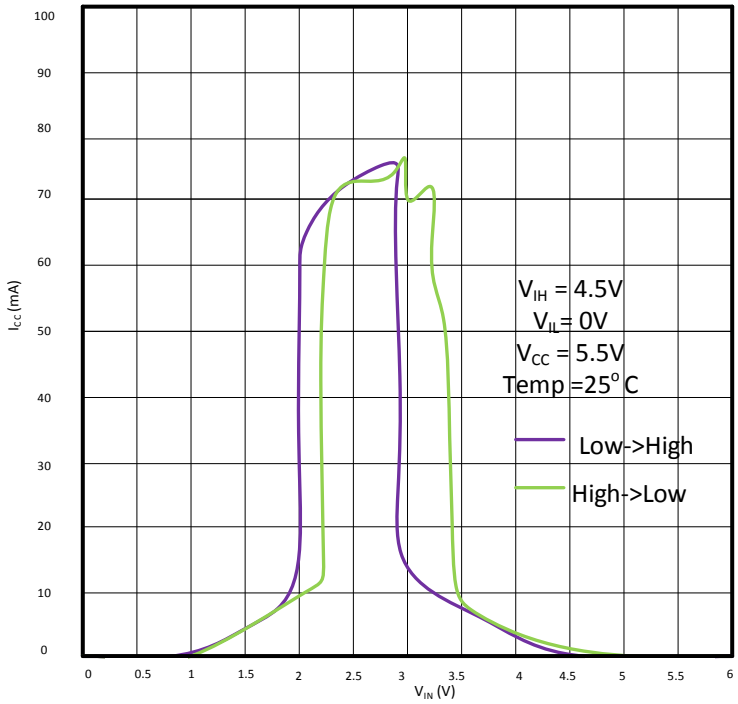

Figure 5. I_{CC} vs. V_{IN}

10 Power Supply Recommendations

The power supply can be any voltage between the minimum and maximum supply voltage rating located in the *Recommended Operating Conditions* table.

Each V_{CC} pin must have a good bypass capacitor to prevent power disturbance. For devices with a single supply, 0.1 µF is recommended. If there are multiple V_{CC} pins, 0.01 µF or 0.022 µF is recommended for each power pin. It is acceptable to parallel multiple bypass caps to reject different frequencies of noise. A 0.1-µF and 1-µF are commonly used in parallel. The bypass capacitor must be installed as close to the power pin as possible for best results.

11 Layout

11.1 Layout Guidelines

Even low data rate digital signals can have high frequency signal components due to fast edge rates. When a PCB trace turns a corner at a 90° angle, a reflection can occur. A reflection occurs primarily because of the change of width of the trace. At the apex of the turn, the trace width increases to 1.414 times the width. This increase upsets the transmission-line characteristics, especially the distributed capacitance and self–inductance of the trace which results in the reflection. Not all PCB traces can be straight and therefore some traces must turn corners. Figure 6 shows progressively better techniques of rounding corners. Only the last example (BEST) maintains constant trace width and minimizes reflections.

11.2 Layout Example

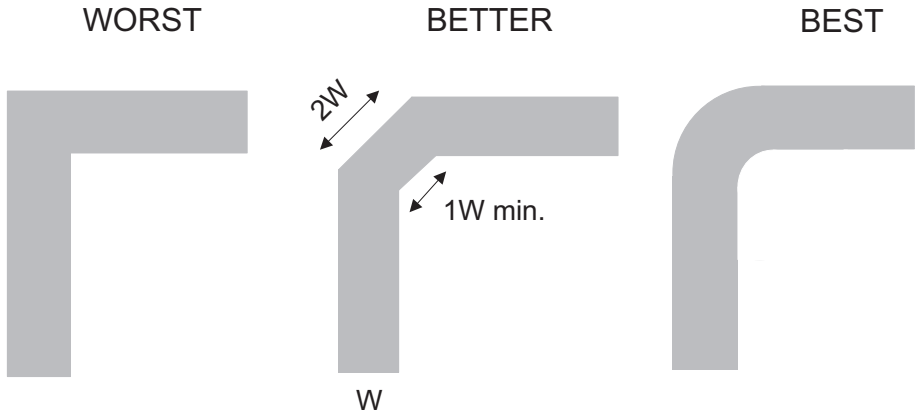

Figure 6. Trace Example

Copyright © 1999–2017, Texas Instruments Incorporated

12 Device and Documentation Support

12.1 Receiving Notification of Documentation Updates

To receive notification of documentation updates, navigate to the device product folder on ti.com. In the upper right corner, click on *Alert me* to register and receive a weekly digest of any product information that has changed. For change details, review the revision history included in any revised document.

12.2 Community Resources

The following links connect to TI community resources. Linked contents are provided "AS IS" by the respective contributors. They do not constitute TI specifications and do not necessarily reflect TI's views; see TI's Terms of Use.

TI E2E™ Online Community ***TI's Engineer-to-Engineer (E2E) Community.*** Created to foster collaboration among engineers. At e2e.ti.com, you can ask questions, share knowledge, explore ideas and help solve problems with fellow engineers.

Design Support ***TI's Design Support*** Quickly find helpful E2E forums along with design support tools and contact information for technical support.

12.3 Trademarks

NanoFree, E2E are trademarks of Texas Instruments.
All other trademarks are the property of their respective owners.

12.4 Electrostatic Discharge Caution

These devices have limited built-in ESD protection. The leads should be shorted together or the device placed in conductive foam during storage or handling to prevent electrostatic damage to the MOS gates.

12.5 Glossary

SLYZ022 — *TI Glossary*.

This glossary lists and explains terms, acronyms, and definitions.

13 Mechanical, Packaging, and Orderable Information

The following pages include mechanical, packaging, and orderable information. This information is the most current data available for the designated devices. This data is subject to change without notice and revision of this document. For browser-based versions of this data sheet, refer to the left-hand navigation.

PACKAGING INFORMATION

Orderable Device	Status (1)	Package Type	Package Drawing	Pins	Package Qty	Eco Plan (2)	Lead finish/ Ball material (6)	MSL Peak Temp (3)	Op Temp (°C)	Device Marking (4/5)	Samples
SN74LVC1G86DBVR	ACTIVE	SOT-23	DBV	5	3000	RoHS & Green	NIPDAU | SN	Level-1-260C-UNLIM	-40 to 125	(C865, C86F, C86J, C86K, C86R)	Samples
SN74LVC1G86DBVRE4	ACTIVE	SOT-23	DBV	5	3000	RoHS & Green	NIPDAU	Level-1-260C-UNLIM	-40 to 125	C86F	Samples
SN74LVC1G86DBVRG4	ACTIVE	SOT-23	DBV	5	3000	RoHS & Green	NIPDAU	Level-1-260C-UNLIM	-40 to 125	C86F	Samples
SN74LVC1G86DBVT	ACTIVE	SOT-23	DBV	5	250	RoHS & Green	NIPDAU | SN	Level-1-260C-UNLIM	-40 to 125	(C865, C86F, C86J, C86K, C86R)	Samples
SN74LVC1G86DCKR	ACTIVE	SC70	DCK	5	3000	RoHS & Green	NIPDAU | SN	Level-1-260C-UNLIM	-40 to 125	(CH5, CHF, CHJ, CH K, CHR)	Samples
SN74LVC1G86DCKRE4	ACTIVE	SC70	DCK	5	3000	RoHS & Green	NIPDAU	Level-1-260C-UNLIM	-40 to 125	CH5	Samples
SN74LVC1G86DCKRG4	ACTIVE	SC70	DCK	5	3000	RoHS & Green	NIPDAU	Level-1-260C-UNLIM	-40 to 125	CH5	Samples
SN74LVC1G86DCKT	ACTIVE	SC70	DCK	5	250	RoHS & Green	NIPDAU | SN	Level-1-260C-UNLIM	-40 to 125	(CH5, CHF, CHJ, CH K, CHR)	Samples
SN74LVC1G86DCKTG4	ACTIVE	SC70	DCK	5	250	RoHS & Green	NIPDAU	Level-1-260C-UNLIM	-40 to 125	CH5	Samples
SN74LVC1G86DRLR	ACTIVE	SOT-5X3	DRL	5	4000	RoHS & Green	NIPDAUAG	Level-1-260C-UNLIM	-40 to 125	(CH7, CHR)	Samples
SN74LVC1G86YZPR	ACTIVE	DSBGA	YZP	5	3000	RoHS & Green	SNAGCU	Level-1-260C-UNLIM	-40 to 85	(CH7, CHN)	Samples

(1) The marketing status values are defined as follows:
ACTIVE: Product device recommended for new designs.
LIFEBUY: TI has announced that the device will be discontinued, and a lifetime-buy period is in effect.
NRND: Not recommended for new designs. Device is in production to support existing customers, but TI does not recommend using this part in a new design.
PREVIEW: Device has been announced but is not in production. Samples may or may not be available.
OBSOLETE: TI has discontinued the production of the device.

(2) **RoHS:** TI defines "RoHS" to mean semiconductor products that are compliant with the current EU RoHS requirements for all 10 RoHS substances, including the requirement that RoHS substance do not exceed 0.1% by weight in homogeneous materials. Where designed to be soldered at high temperatures, "RoHS" products are suitable for use in specified lead-free processes. TI may reference these types of products as "Pb-Free".
RoHS Exempt: TI defines "RoHS Exempt" to mean products that contain lead but are compliant with EU RoHS pursuant to a specific EU RoHS exemption.
Green: TI defines "Green" to mean the content of Chlorine (Cl) and Bromine (Br) based flame retardants meet JS709B low halogen requirements of <=1000ppm threshold. Antimony trioxide based flame retardants must also meet the <=1000ppm threshold requirement.

(3) MSL, Peak Temp. - The Moisture Sensitivity Level rating according to the JEDEC industry standard classifications, and peak solder temperature.

(4) There may be additional marking, which relates to the logo, the lot trace code information, or the environmental category on the device.

(5) Multiple Device Markings will be inside parentheses. Only one Device Marking contained in parentheses and separated by a "~" will appear on a device. If a line is indented then it is a continuation of the previous line and the two combined represent the entire Device Marking for that device.

(6) Lead finish/Ball material - Orderable Devices may have multiple material finish options. Finish options are separated by a vertical ruled line. Lead finish/Ball material values may wrap to two lines if the finish value exceeds the maximum column width.

Important Information and Disclaimer: The information provided on this page represents TI's knowledge and belief as of the date that it is provided. TI bases its knowledge and belief on information provided by third parties, and makes no representation or warranty as to the accuracy of such information. Efforts are underway to better integrate information from third parties. TI has taken and continues to take reasonable steps to provide representative and accurate information but may not have conducted destructive testing or chemical analysis on incoming materials and chemicals. TI and TI suppliers consider certain information to be proprietary, and thus CAS numbers and other limited information may not be available for release.

In no event shall TI's liability arising out of such information exceed the total purchase price of the TI part(s) at issue in this document sold by TI to Customer on an annual basis.

OTHER QUALIFIED VERSIONS OF SN74LVC1G86 :

- Automotive : SN74LVC1G86-Q1
- Enhanced Product : SN74LVC1G86-EP

NOTE: Qualified Version Definitions:

- Automotive - Q100 devices qualified for high-reliability automotive applications targeting zero defects
- Enhanced Product - Supports Defense, Aerospace and Medical Applications

TAPE AND REEL INFORMATION

REEL DIMENSIONS

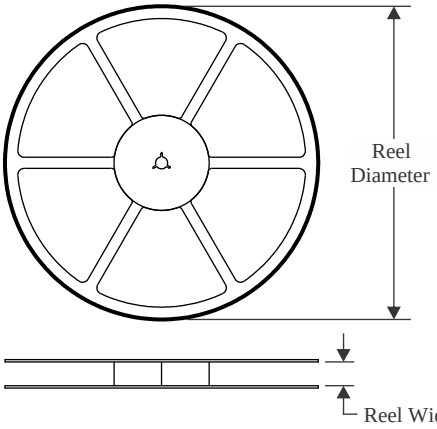

TAPE DIMENSIONS

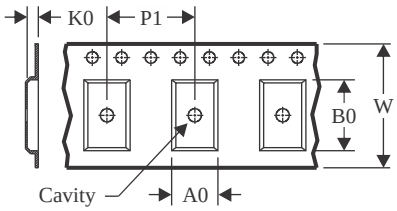

A0	Dimension designed to accommodate the component width
B0	Dimension designed to accommodate the component length
K0	Dimension designed to accommodate the component thickness
W	Overall width of the carrier tape
P1	Pitch between successive cavity centers

QUADRANT ASSIGNMENTS FOR PIN 1 ORIENTATION IN TAPE

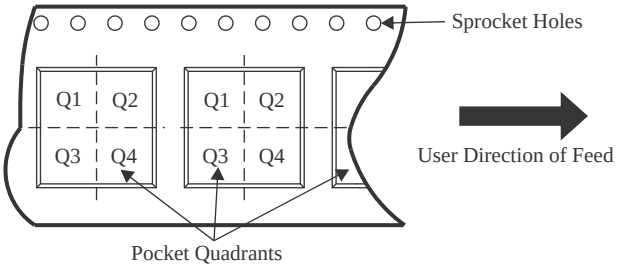

*All dimensions are nominal

Device	Package Type	Package Drawing	Pins	SPQ	Reel Diameter (mm)	Reel Width W1 (mm)	A0 (mm)	B0 (mm)	K0 (mm)	P1 (mm)	W (mm)	Pin1 Quadrant
SN74LVC1G86DBVR	SOT-23	DBV	5	3000	180.0	8.4	3.2	3.2	1.4	4.0	8.0	Q3
SN74LVC1G86DBVRG4	SOT-23	DBV	5	3000	178.0	9.0	3.23	3.17	1.37	4.0	8.0	Q3
SN74LVC1G86DBVT	SOT-23	DBV	5	250	180.0	8.4	3.2	3.2	1.4	4.0	8.0	Q3
SN74LVC1G86DBVT	SOT-23	DBV	5	250	180.0	8.4	3.2	3.2	1.4	4.0	8.0	Q3
SN74LVC1G86DCKR	SC70	DCK	5	3000	180.0	8.4	2.3	2.5	1.2	4.0	8.0	Q3
SN74LVC1G86DCKRG4	SC70	DCK	5	3000	178.0	9.2	2.4	2.4	1.22	4.0	8.0	Q3
SN74LVC1G86DCKT	SC70	DCK	5	250	178.0	9.2	2.4	2.4	1.22	4.0	8.0	Q3
SN74LVC1G86DCKT	SC70	DCK	5	250	180.0	8.4	2.47	2.3	1.25	4.0	8.0	Q3
SN74LVC1G86DCKT	SC70	DCK	5	250	178.0	9.0	2.4	2.5	1.2	4.0	8.0	Q3
SN74LVC1G86DCKTG4	SC70	DCK	5	250	178.0	9.2	2.4	2.4	1.22	4.0	8.0	Q3
SN74LVC1G86DRLR	SOT-5X3	DRL	5	4000	180.0	8.4	1.98	1.78	0.69	4.0	8.0	Q3
SN74LVC1G86YZPR	DSBGA	YZP	5	3000	178.0	9.2	1.02	1.52	0.63	4.0	8.0	Q1

TAPE AND REEL BOX DIMENSIONS

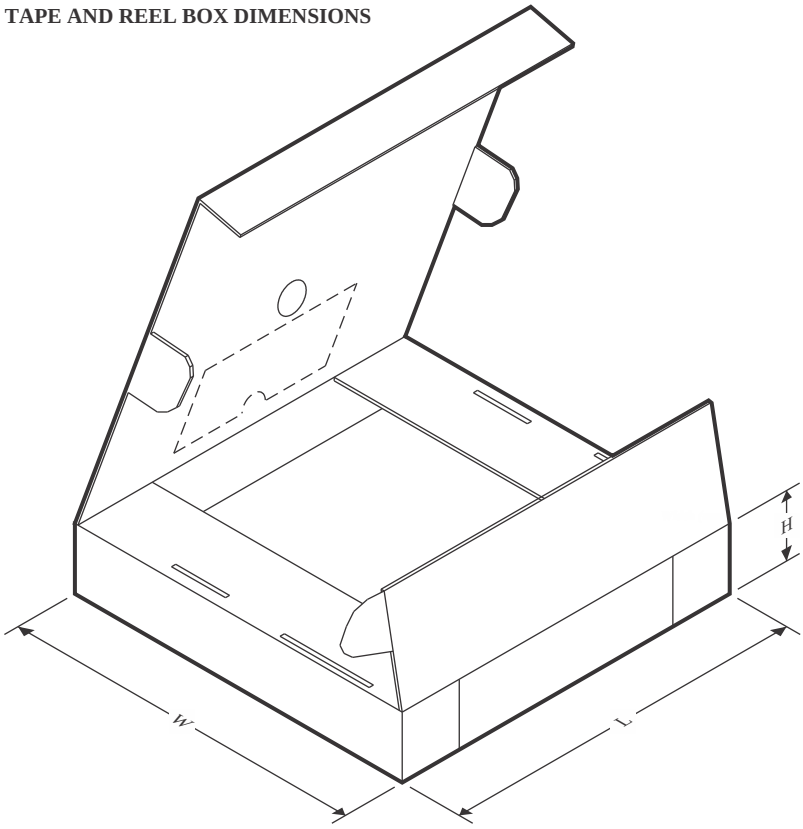

*All dimensions are nominal

Device	Package Type	Package Drawing	Pins	SPQ	Length (mm)	Width (mm)	Height (mm)
SN74LVC1G86DBVR	SOT-23	DBV	5	3000	210.0	185.0	35.0
SN74LVC1G86DBVRG4	SOT-23	DBV	5	3000	180.0	180.0	18.0
SN74LVC1G86DBVT	SOT-23	DBV	5	250	210.0	185.0	35.0
SN74LVC1G86DBVT	SOT-23	DBV	5	250	210.0	185.0	35.0
SN74LVC1G86DCKR	SC70	DCK	5	3000	210.0	185.0	35.0
SN74LVC1G86DCKRG4	SC70	DCK	5	3000	180.0	180.0	18.0
SN74LVC1G86DCKT	SC70	DCK	5	250	180.0	180.0	18.0
SN74LVC1G86DCKT	SC70	DCK	5	250	202.0	201.0	28.0
SN74LVC1G86DCKT	SC70	DCK	5	250	180.0	180.0	18.0
SN74LVC1G86DCKTG4	SC70	DCK	5	250	180.0	180.0	18.0
SN74LVC1G86DRLR	SOT-5X3	DRL	5	4000	202.0	201.0	28.0
SN74LVC1G86YZPR	DSBGA	YZP	5	3000	220.0	220.0	35.0

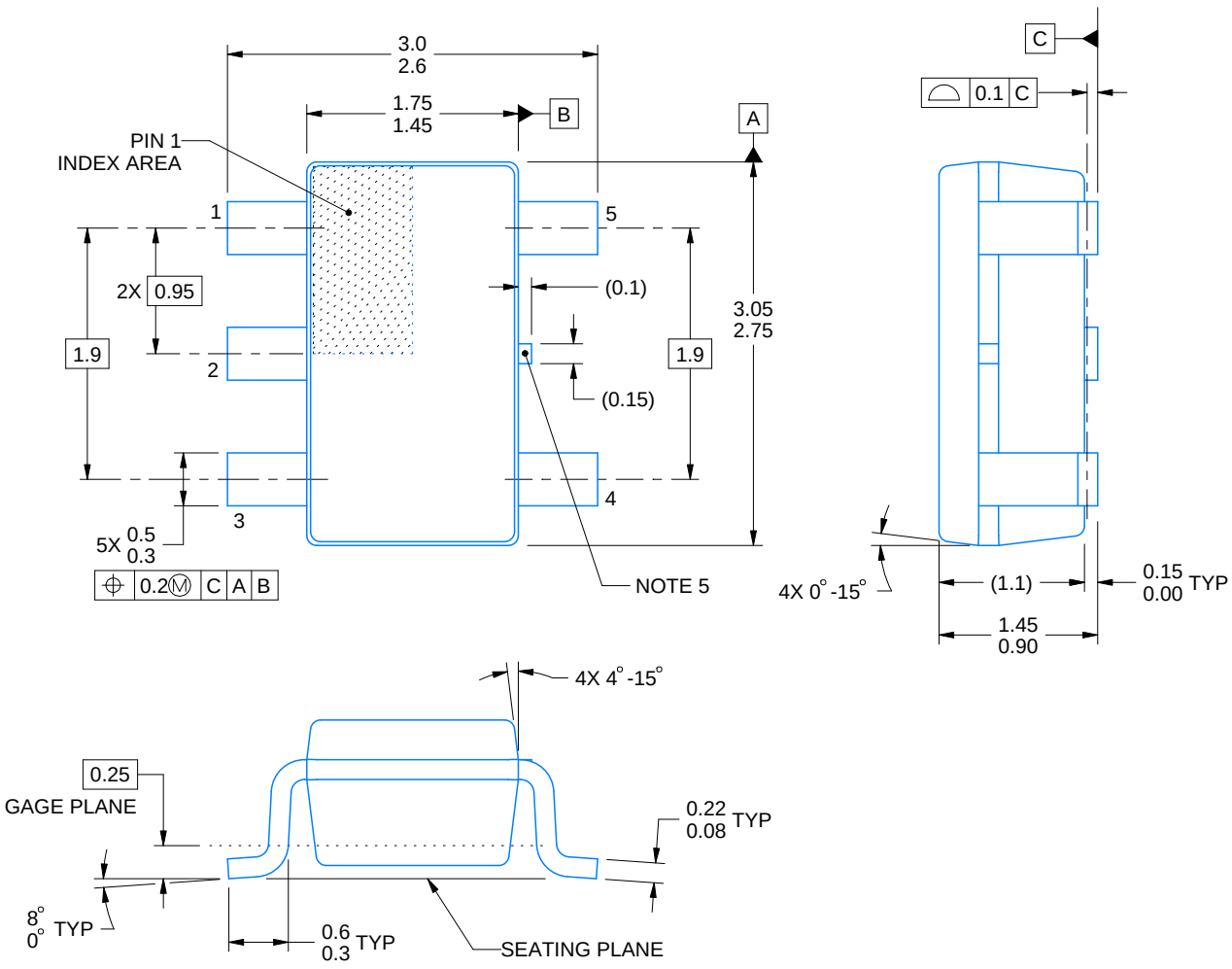

4214839/K 08/2024

NOTES:

1. All linear dimensions are in millimeters. Any dimensions in parenthesis are for reference only. Dimensioning and tolerancing per ASME Y14.5M.
2. This drawing is subject to change without notice.
3. Refernce JEDEC MO-178.
4. Body dimensions do not include mold flash, protrusions, or gate burrs. Mold flash, protrusions, or gate burrs shall not exceed 0.25 mm per side.
5. Support pin may differ or may not be present.

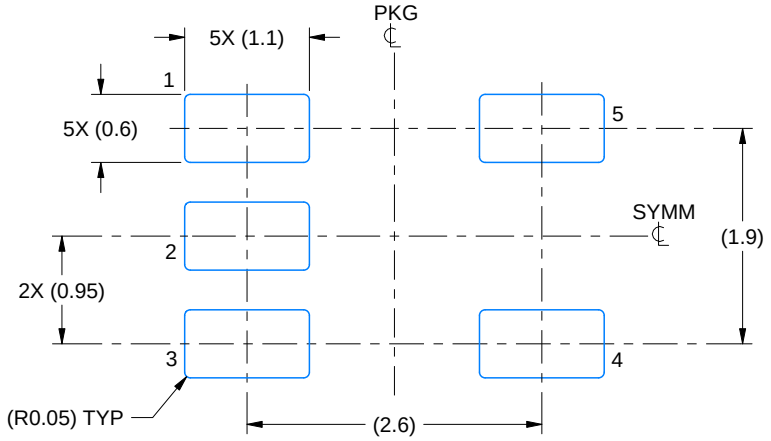

LAND PATTERN EXAMPLE
EXPOSED METAL SHOWN
SCALE:15X

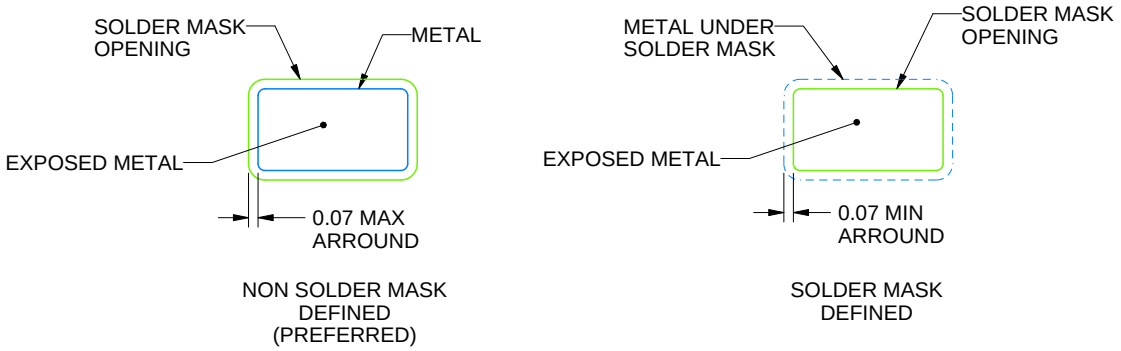

SOLDER MASK DETAILS

4214839/K 08/2024

NOTES: (continued)

6. Publication IPC-7351 may have alternate designs.
7. Solder mask tolerances between and around signal pads can vary based on board fabrication site.

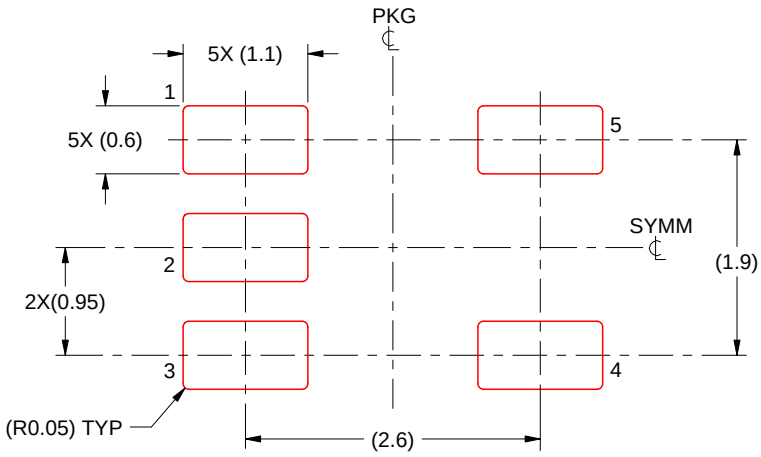

SOLDER PASTE EXAMPLE
BASED ON 0.125 mm THICK STENCIL
SCALE:15X

4214839/K 08/2024

NOTES: (continued)

8. Laser cutting apertures with trapezoidal walls and rounded corners may offer better paste release. IPC-7525 may have alternate design recommendations.
9. Board assembly site may have different recommendations for stencil design.

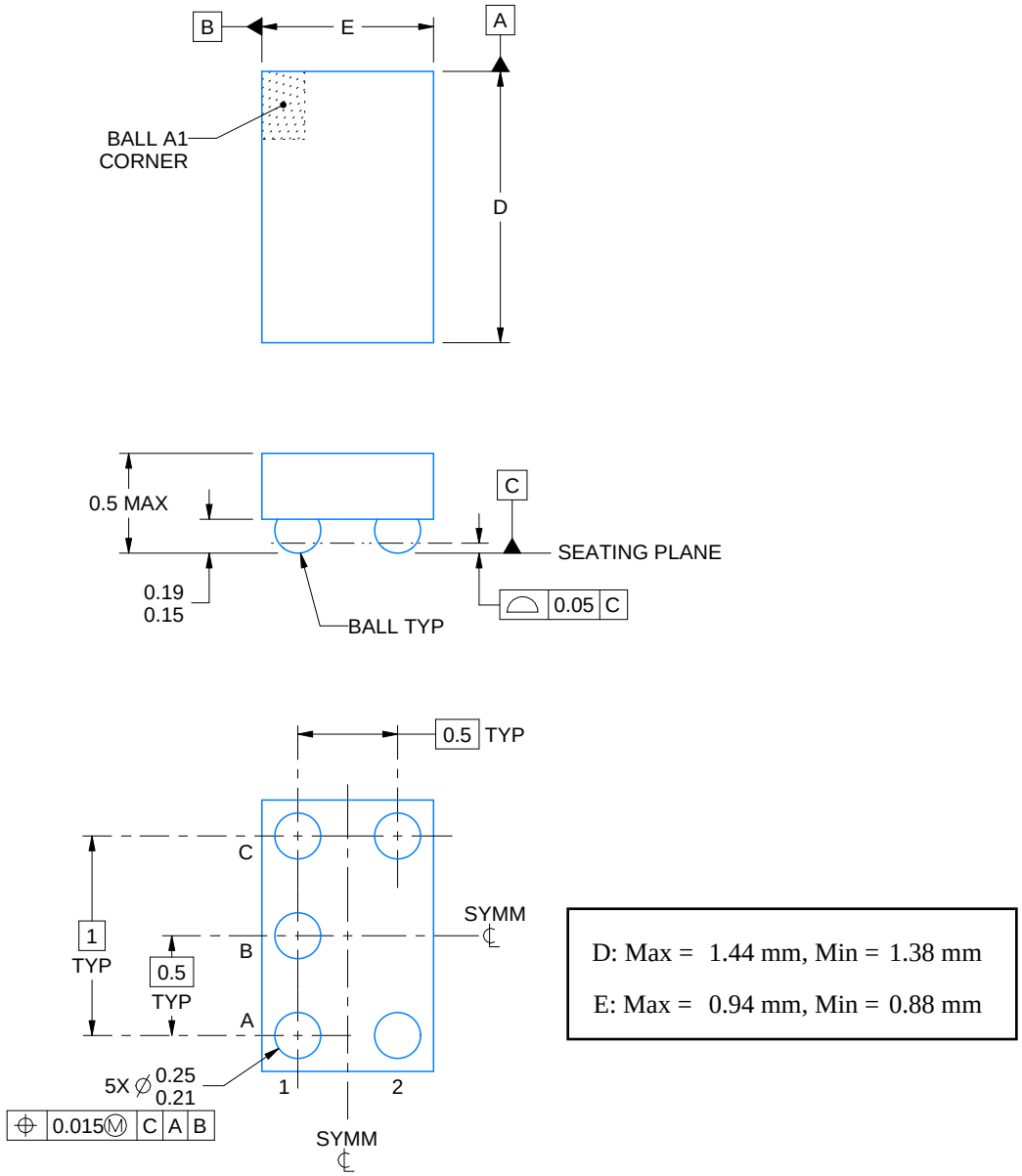

NOTES:

1. All linear dimensions are in millimeters. Any dimensions in parenthesis are for reference only. Dimensioning and tolerancing per ASME Y14.5M.
2. This drawing is subject to change without notice.

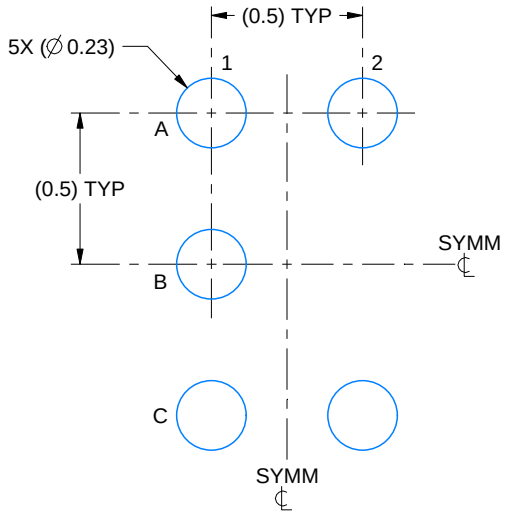

LAND PATTERN EXAMPLE
SCALE:40X

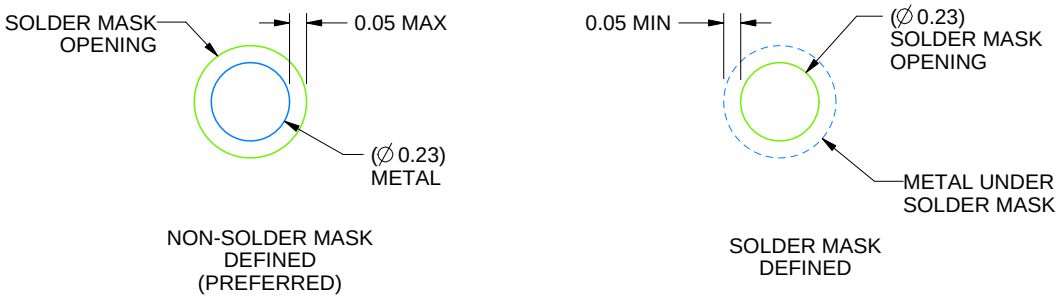

SOLDER MASK DETAILS
NOT TO SCALE

4219492/A 05/2017

NOTES: (continued)

3. Final dimensions may vary due to manufacturing tolerance considerations and also routing constraints. For more information, see Texas Instruments literature number SNVA009 (www.ti.com/lit/snva009).

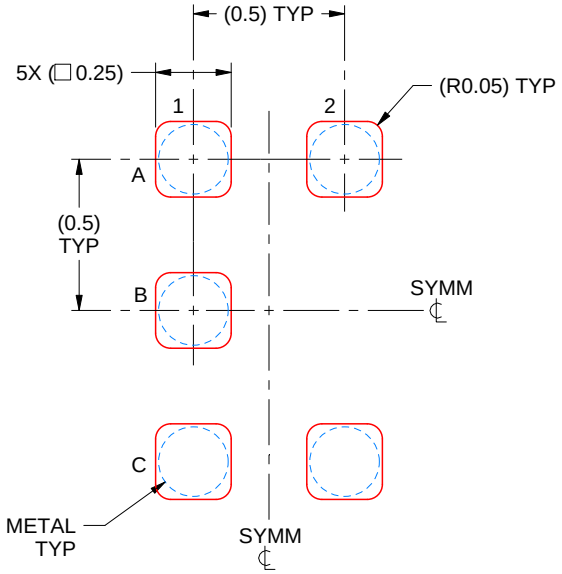

SOLDER PASTE EXAMPLE
BASED ON 0.1 mm THICK STENCIL
SCALE:40X

4219492/A 05/2017

NOTES: (continued)

4. Laser cutting apertures with trapezoidal walls and rounded corners may offer better paste release.

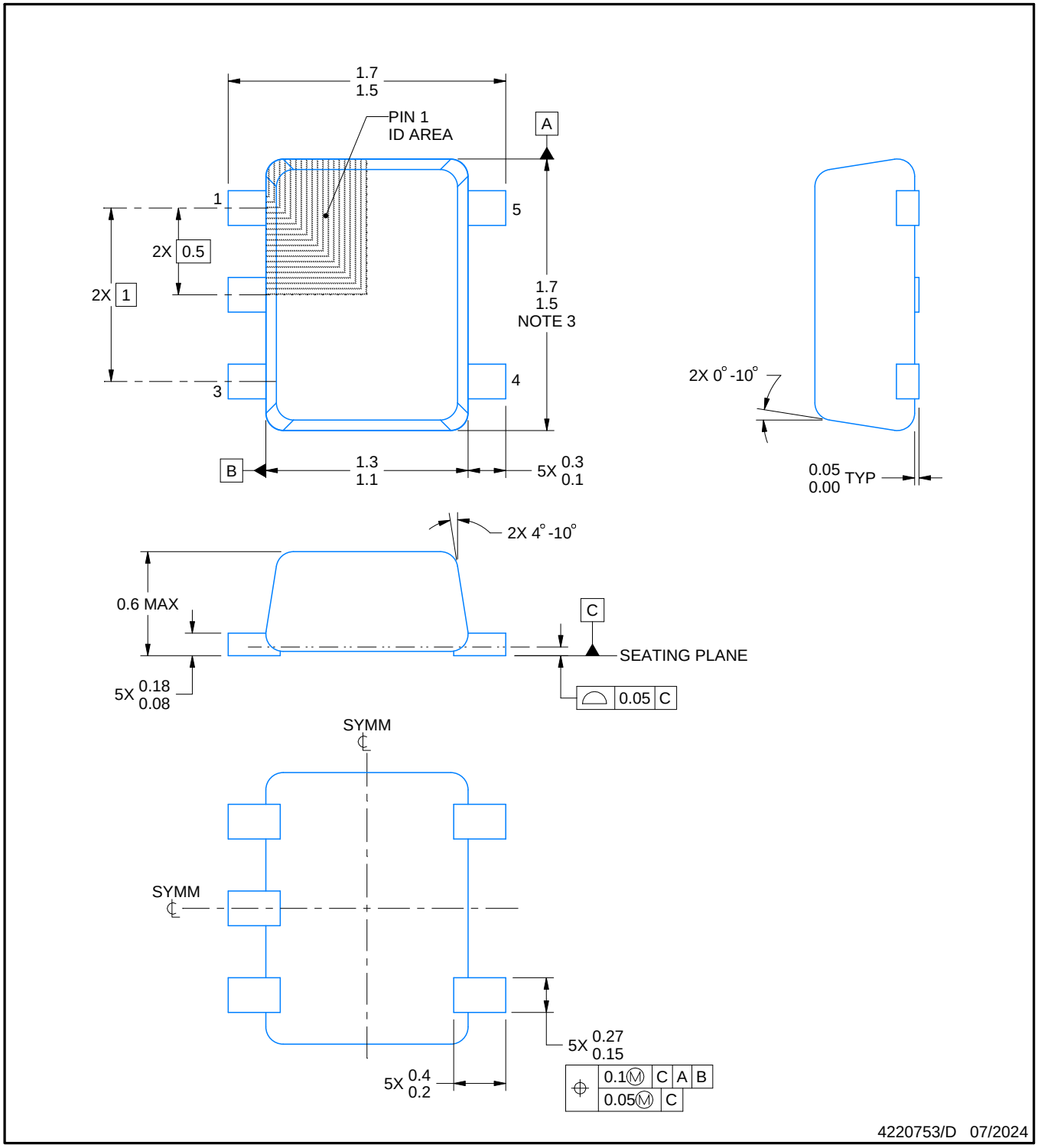

NOTES:

1. All linear dimensions are in millimeters. Any dimensions in parenthesis are for reference only. Dimensioning and tolerancing per ASME Y14.5M.
2. This drawing is subject to change without notice.
3. This dimension does not include mold flash, protrusions, or gate burrs. Mold flash, protrusions, or gate burrs shall not exceed 0.15 mm per side.
4. Reference JEDEC registration MO-293 Variation UAAD-1

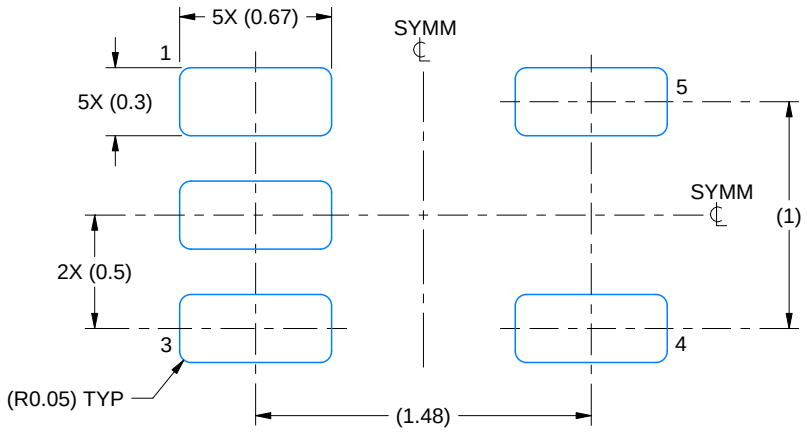

LAND PATTERN EXAMPLE
SCALE:30X

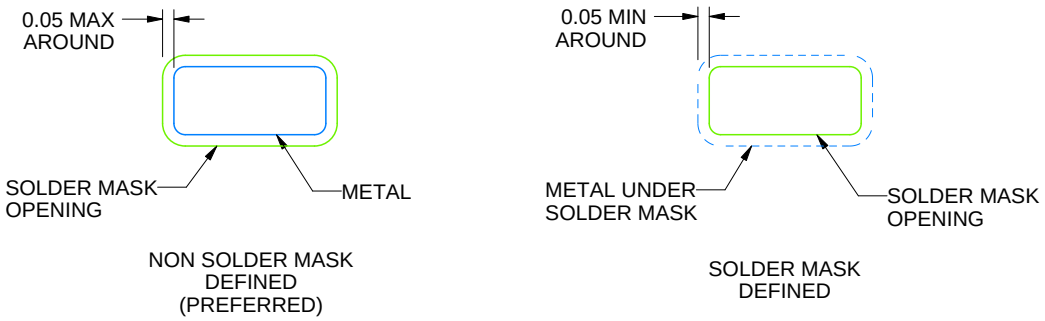

SOLDERMASK DETAILS

4220753/D 07/2024

NOTES: (continued)

5. Publication IPC-7351 may have alternate designs.
6. Solder mask tolerances between and around signal pads can vary based on board fabrication site.

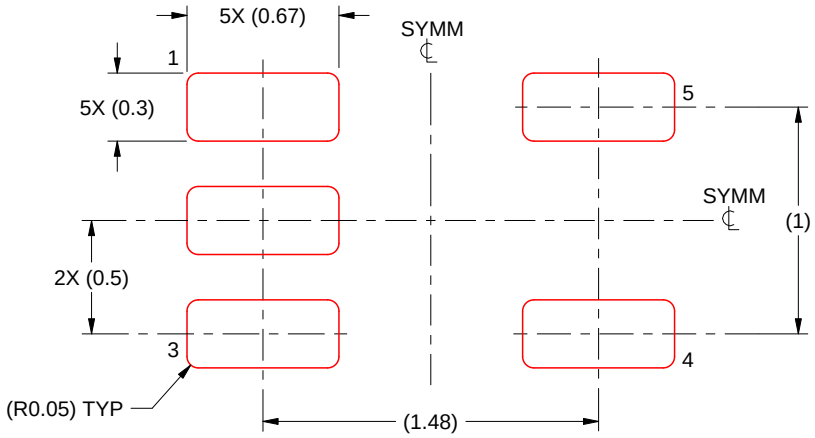

SOLDER PASTE EXAMPLE
BASED ON 0.1 mm THICK STENCIL
SCALE:30X

4220753/D 07/2024

NOTES: (continued)

7. Laser cutting apertures with trapezoidal walls and rounded corners may offer better paste release. IPC-7525 may have alternate design recommendations.
8. Board assembly site may have different recommendations for stencil design.

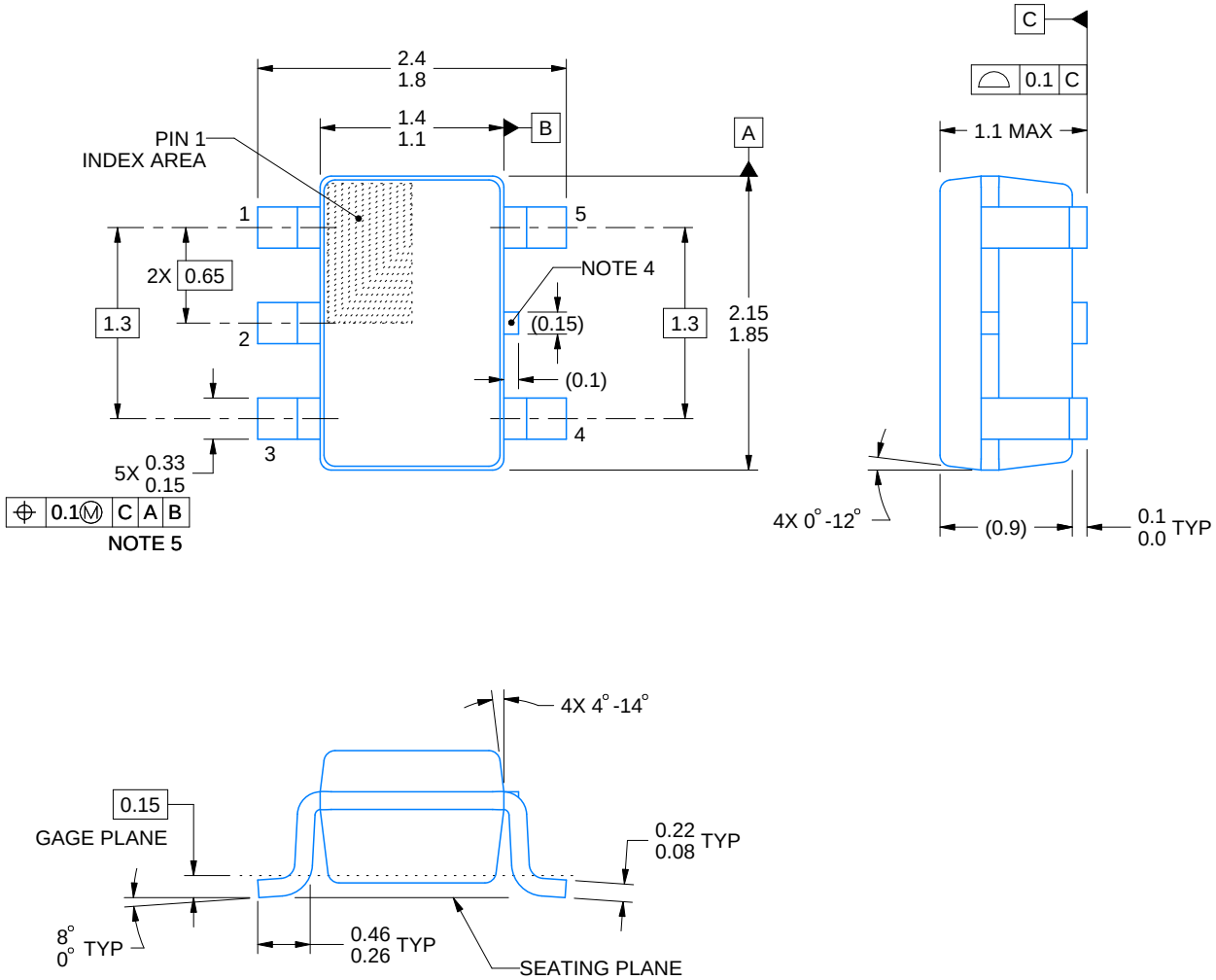

4214834/F 08/2024

NOTES:

1. All linear dimensions are in millimeters. Any dimensions in parenthesis are for reference only. Dimensioning and tolerancing per ASME Y14.5M.
2. This drawing is subject to change without notice.
3. Refernce JEDEC MO-203.
4. Support pin may differ or may not be present.
5. Lead width does not comply with JEDEC.
6. Body dimensions do not include mold flash, protrusions, or gate burrs. Mold flash, protrusions, or gate burrs shall not exceed 0.25mm per side

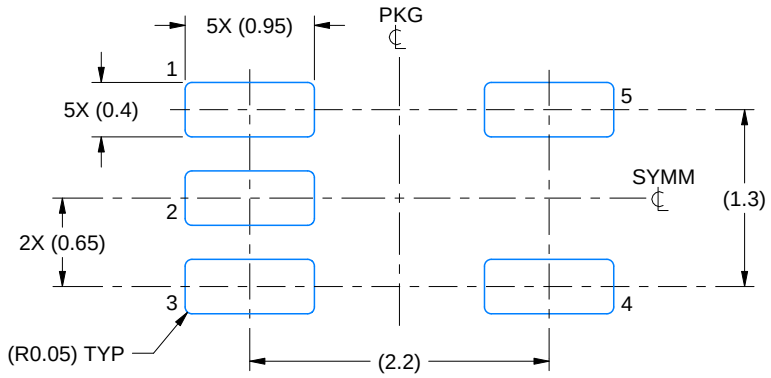

LAND PATTERN EXAMPLE
EXPOSED METAL SHOWN
SCALE:18X

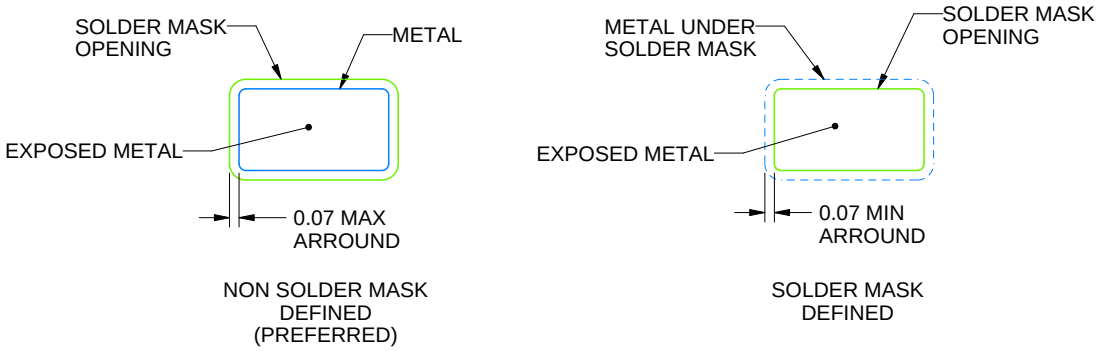

SOLDER MASK DETAILS

4214834/F 08/2024

NOTES: (continued)

7. Publication IPC-7351 may have alternate designs.
8. Solder mask tolerances between and around signal pads can vary based on board fabrication site.

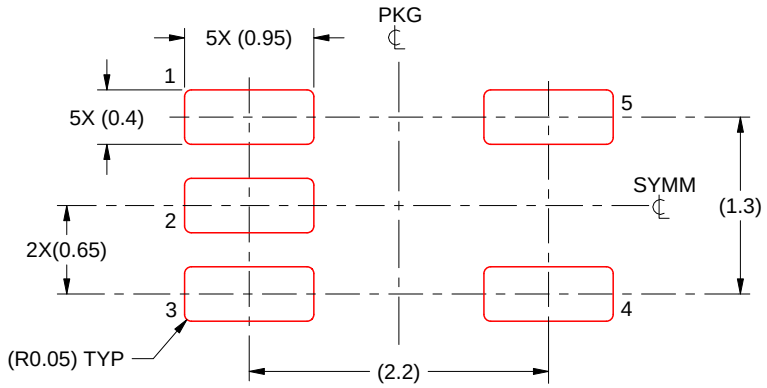

SOLDER PASTE EXAMPLE
BASED ON 0.125 THICK STENCIL
SCALE:18X

4214834/F 08/2024

NOTES: (continued)

9. Laser cutting apertures with trapezoidal walls and rounded corners may offer better paste release. IPC-7525 may have alternate design recommendations.
10. Board assembly site may have different recommendations for stencil design.

IMPORTANT NOTICE AND DISCLAIMER

TI PROVIDES TECHNICAL AND RELIABILITY DATA (INCLUDING DATA SHEETS), DESIGN RESOURCES (INCLUDING REFERENCE DESIGNS), APPLICATION OR OTHER DESIGN ADVICE, WEB TOOLS, SAFETY INFORMATION, AND OTHER RESOURCES “AS IS” AND WITH ALL FAULTS, AND DISCLAIMS ALL WARRANTIES, EXPRESS AND IMPLIED, INCLUDING WITHOUT LIMITATION ANY IMPLIED WARRANTIES OF MERCHANTABILITY, FITNESS FOR A PARTICULAR PURPOSE OR NON-INFRINGEMENT OF THIRD PARTY INTELLECTUAL PROPERTY RIGHTS.

These resources are intended for skilled developers designing with TI products. You are solely responsible for (1) selecting the appropriate TI products for your application, (2) designing, validating and testing your application, and (3) ensuring your application meets applicable standards, and any other safety, security, regulatory or other requirements.

These resources are subject to change without notice. TI grants you permission to use these resources only for development of an application that uses the TI products described in the resource. Other reproduction and display of these resources is prohibited. No license is granted to any other TI intellectual property right or to any third party intellectual property right. TI disclaims responsibility for, and you will fully indemnify TI and its representatives against, any claims, damages, costs, losses, and liabilities arising out of your use of these resources.

TI’s products are provided subject to TI’s Terms of Sale or other applicable terms available either on ti.com or provided in conjunction with such TI products. TI’s provision of these resources does not expand or otherwise alter TI’s applicable warranties or warranty disclaimers for TI products.

TI objects to and rejects any additional or different terms you may have proposed.

Mailing Address: Texas Instruments, Post Office Box 655303, Dallas, Texas 75265
Copyright © 2024, Texas Instruments Incorporated