SN54HC160 THRU SN54HC163
SN74HC160 THRU SN74HC163
SYNCHRONOUS 4-BIT DECADE AND BINARY COUNTERS

SCLS114 D2684, DECEMBER 1982 – REVISED SEPTEMBER 1987

- **Internal Look Ahead for Fast Counting**
- **Carry Output for N-Bit Cascading**
- **Synchronous Counting**
- **Synchronously Programmable**
- **Package Options Include Plastic "Small Outline" Packages, Ceramic Chip Carriers, and Standard Plastic and Ceramic 300-mil DIPs**
- **Dependable Texas Instruments Quality and Reliability**

SN54HC' . . . J PACKAGE
SN74HC' . . . D OR N PACKAGE
(TOP VIEW)

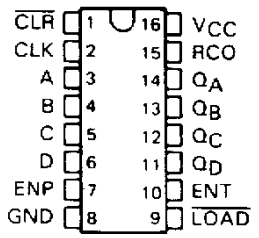

SN54HC' . . . FK PACKAGE
(TOP VIEW)

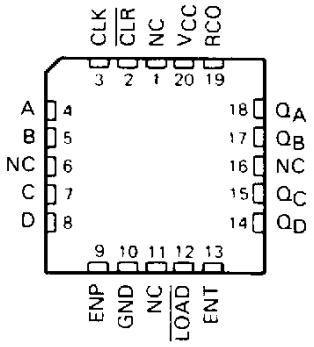

NC – No internal connection

description

These synchronous, presettable counters feature an internal carry look-ahead for application in high-speed counting designs. The 'HC160 and 'HC162 are decade counters, and the 'HC161 and 'HC163 are 4-bit binary counters. Synchronous operation is provided by having all flip-flops clocked simultaneously so that the outputs change coincident with each other when so instructed by the count-enable inputs and internal gating. This mode of operation eliminates the output counting spikes that are normally associated with synchronous (ripple clock) counters. A buffered clock input triggers the four flip-flops on the rising (positive-going) edge of the clock input waveform.

These counters are fully programmable; that is, they may be preset to any number between 0 and 9 or 15. As presetting is synchronous, setting up a low level at the load input disables the counter and causes the outputs to agree with the setup data after the next clock pulse regardless of the levels of the enable inputs.

The clear function for the 'HC160 and 'HC161 is asynchronous and a low level at the clear input sets all four of the flip-flop outputs low regardless of the levels of the clock, load, or enable inputs.

The clear function for the 'HC162 and 'HC163 is synchronous and a low level at the clear input sets all four of the flip-flop outputs low after the next low-to-high transition of the clock input, regardless of the levels of the enable inputs. This synchronous clear allows the count length to be modified easily by decoding the Q outputs for the maximum count desired. The active-low output of the gate used for decoding is connected to the clear input to synchronously clear the counter to 0000 (LLLL).

The carry look-ahead circuitry provides for cascading counters for n-bits synchronous applications without additional gating. Instrumental in accomplishing this function are two count-enable inputs and a ripple carry output. Both count-enable inputs (ENP and ENT) must be high to count, and ENT is fed forward to enable the ripple carry output. The ripple carry output (RCO) thus enabled will produce a high-level pulse while the count is maximum (9 or 15 with Q_A high). This high-level overflow ripple carry pulse can be used to enable successive cascaded stages. Transitions at the ENP or ENT are allowed regardless of the level of the clock input.

PRODUCTION DATA documents contain information current as of publication date. Products conform to specifications per the terms of Texas Instruments standard warranty. Production processing does not necessarily include testing of all parameters.

Copyright © 1982, Texas Instruments Incorporated

These counters feature a fully independent clock circuit. Changes at control inputs (ENP, ENT, or $\overline{\text{LOAD}}$) that will modify the operating mode have no effect on the contents of the counter until clocking occurs. The function of the counter (whether enabled, disabled, loading, or counting) will be dictated solely by the conditions meeting the stable setup and hold times.

The SN54HC160 through SN54HC163 are characterized for operation over the full military temperature range of −55°C to 125°C. The SN74HC160 through SN74HC163 are characterized for operation from −40°C to 85°C.

logic symbols†

'HC160 DECADE COUNTER WITH DIRECT CLEAR

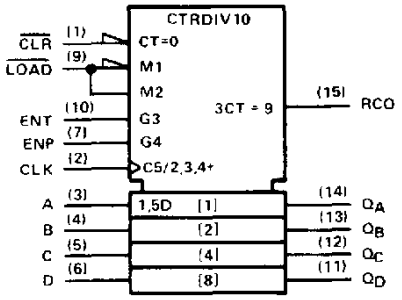

'HC162 DECADE COUNTER WITH SYNCHRONOUS CLEAR

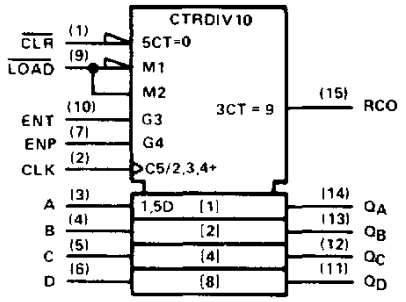

'HC160 and 'HC162 logic diagram (positive logic)

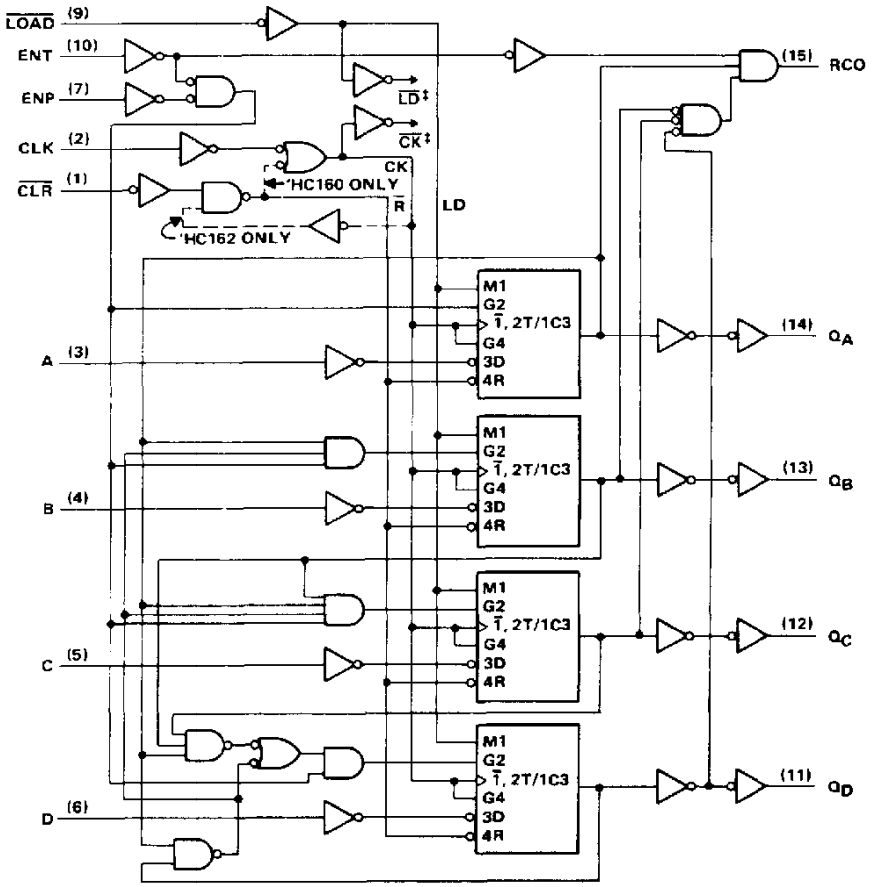

† These symbols are in accordance with ANSI/IEEE Std 91-1984 and IEC Publication 617-12.

‡ For the sake of simplicity, the routing of the complementary signals $\overline{LD}$ and $\overline{CK}$ is not shown on this overall logic diagram. The uses of these signals are shown on the logic diagram of the D/T flip-flops.

Pin numbers shown are for D, J, and N packages.

logic symbols†

'HC161 BINARY COUNTER WITH DIRECT CLEAR

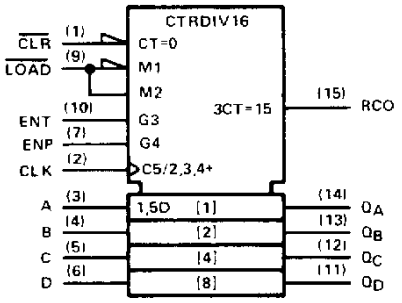

'HC163 BINARY COUNTER WITH SYNCHRONOUS CLEAR

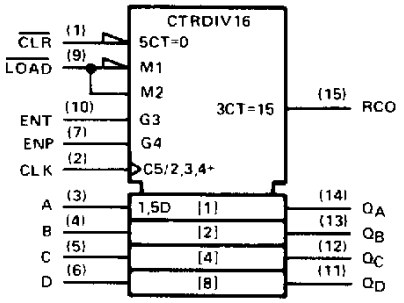

'HC161 and 'HC163 logic diagram (positive logic)

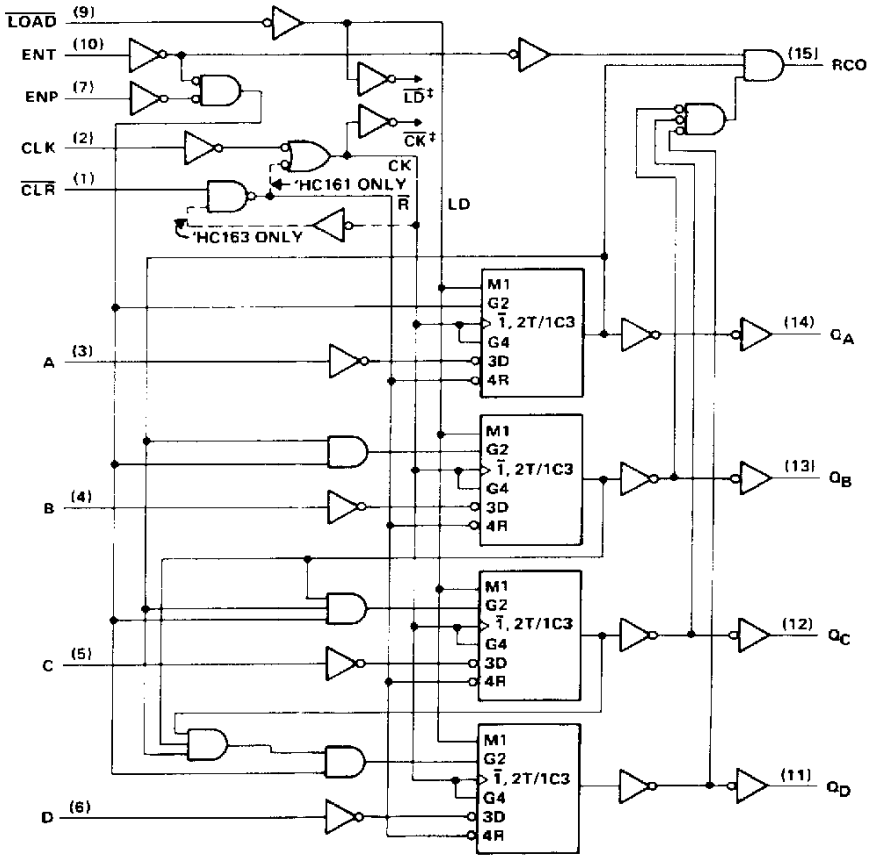

† These symbols are in accordance with ANSI/IEEE Std 91-1984 and IEC Publication 617-12.
‡ For the sake of simplicity, the routing of the complementary signals $\overline{LD}$ and $\overline{CK}$ is not shown on this overall logic diagram. The uses of these signals are shown on the logic diagram of the D/T flip-flops.
Pin numbers shown are for D, J, and N packages.

logic symbol, each D/T flip-flop (positive logic)

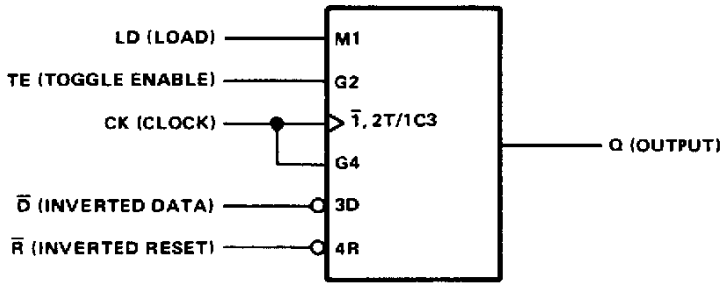

logic diagram, each D/T flip-flop (positive logic)

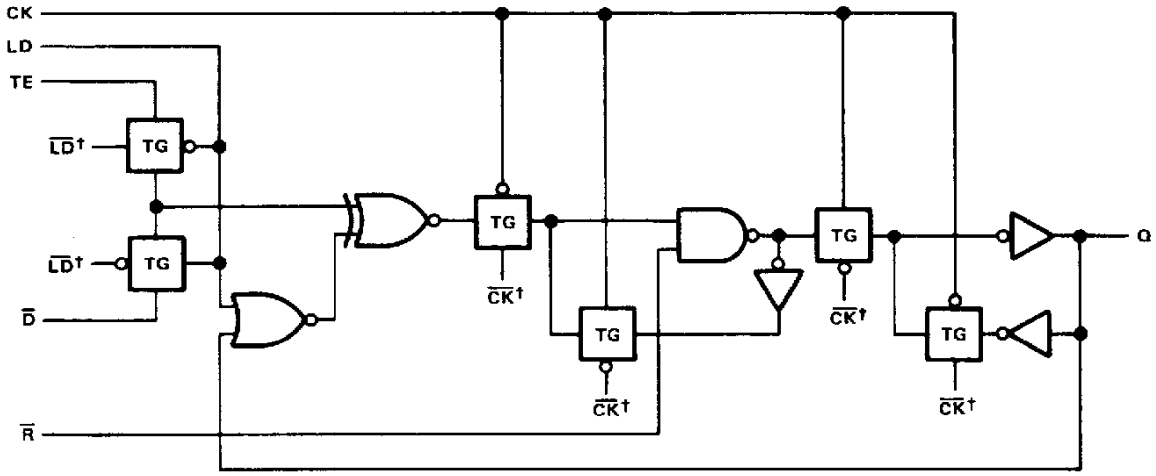

† The origins of the signals $\overline{LD}$ and $\overline{CK}$ are shown in the logic diagrams of the overall devices.

'HC160 and 'HC162 output sequence

Illustrated below is the following sequence:

1. Clear outputs to zero (SN54HC160 and SN74HC160 are asynchronous; SN54HC162 and SN74HC162 are synchronous)
2. Preset to BCD seven
3. Count to eight, nine, zero, one, two, and three
4. Inhibit

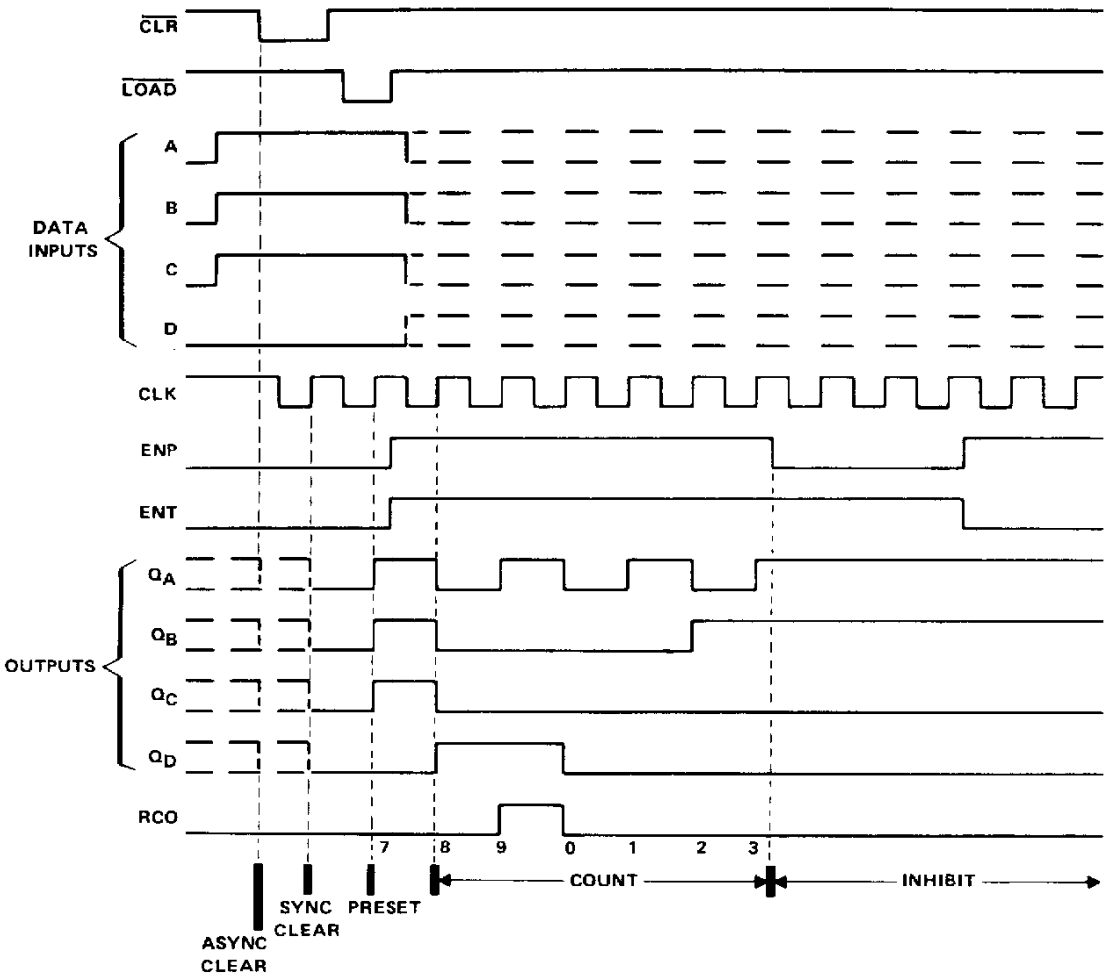

'HC161 and 'HC163 output sequence

Illustrated below is the following sequence:

1. Clear outputs to zero (SN54HC161 and SN74HC161 are asynchronous; SN54HC163 and SN74HC163 are synchronous)
2. Preset to binary twelve
3. Count to thirteen, fourteen, zero, one, and two
4. Inhibit

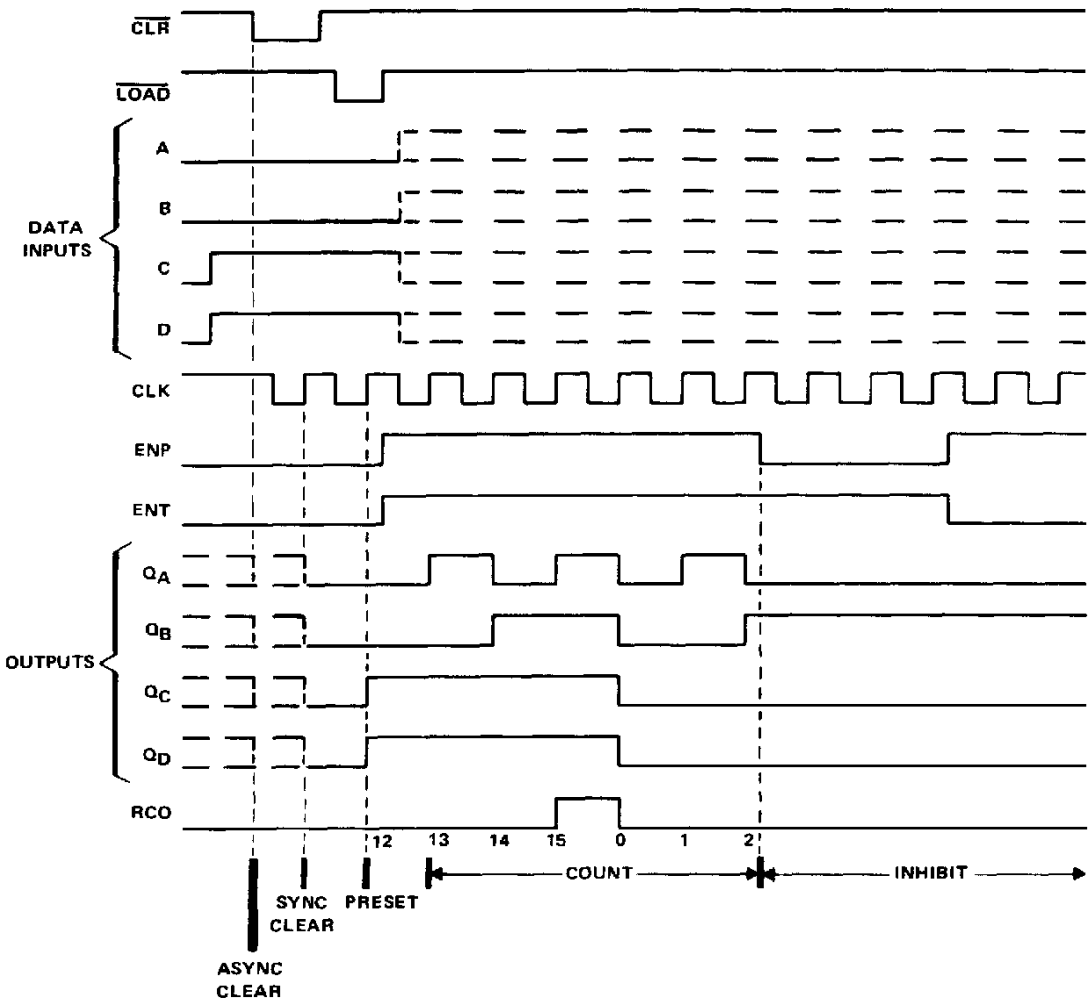

absolute maximum ratings over operating free-air temperature range†

Supply voltage, V_{CC} . . . . . −0.5 V to 7 V
Input clamp current, I_{IK} (V_I < 0 or V_I > V_{CC}) . . . . . ±20 mA
Output clamp current, I_{OK} (V_O < 0 or V_O > V_{CC}) . . . . . ±20 mA
Continuous output current, I_O (V_O = 0 to V_{CC}) . . . . . ±25 mA
Continuous current through V_{CC} or GND pins . . . . . ±50 mA
Lead temperature 1,6 mm (1/16 in) from case for 60 s: FK or J package . . . . . 300°C
Lead temperature 1,6 mm (1/16 in) from case for 10 s: D or N package . . . . . 260°C
Storage temperature range . . . . . −65°C to 150°C

† Stresses beyond those listed under "absolute maximum ratings" may cause permanent damage to the device. These are stress ratings only, and functional operation of the device at these or any other conditions beyond those indicated under "recommended operating conditions" is not implied. Exposure to absolute-maximum-rated conditions for extended periods may affect device reliability.

recommended operating conditions

			SN54HC'			SN74HC'			UNIT
			MIN	NOM	MAX	MIN	NOM	MAX	
V_{CC}	Supply voltage		2	5	6	2	5	6	V
V_{IH}	High-level input voltage	V_{CC} = 2 V	1.5			1.5			V
		V_{CC} = 4.5 V	3.15			3.15			
		V_{CC} = 6 V	4.2			4.2			
V_{IL}	Low-level input voltage	V_{CC} = 2 V	0		0.3	0		0.3	V
		V_{CC} = 4.5 V	0		0.9	0		0.9	
		V_{CC} = 6 V	0		1.2	0		1.2	
V_I	Input voltage		0		V_{CC}	0		V_{CC}	V
V_O	Output voltage		0		V_{CC}	0		V_{CC}	V
t_t	Input transition (rise and fall) times	V_{CC} = 2 V	0		1000	0		1000	ns
		V_{CC} = 4.5 V	0		500	0		500	
		V_{CC} = 6 V	0		400	0		400	
T_A	Operating free-air temperature		−55		125	−40		85	°C

electrical characteristics over recommended operating free-air temperature range (unless otherwise noted)

PARAMETER	TEST CONDITIONS	V_{CC}	T_A = 25°C			SN54HC'		SN74HC'		UNIT
			MIN	TYP	MAX	MIN	MAX	MIN	MAX	
V_{OH}	V_I = V_{IH} or V_{IL}, I_{OH} = −20 μA	2 V	1.9	1.998		1.9		1.9		V
		4.5 V	4.4	4.499		4.4		4.4		
		6 V	5.9	5.999		5.9		5.9		
	V_I = V_{IH} or V_{IL}, I_{OH} = −4 mA	4.5 V	3.98	4.30		3.7		3.84		
	V_I = V_{IH} or V_{IL}, I_{OH} = −5.2 mA	6 V	5.48	5.80		5.2		5.34		
V_{OL}	V_I = V_{IH} or V_{IL}, I_{OL} = 20 μA	2 V		0.002	0.1		0.1		0.1	V
		4.5 V		0.001	0.1		0.1		0.1	
		6 V		0.001	0.1		0.1		0.1	
	V_I = V_{IH} or V_{IL}, I_{OL} = 4 mA	4.5 V		0.17	0.26		0.4		0.33	
	V_I = V_{IH} or V_{IL}, I_{OL} = 5.2 mA	6 V		0.15	0.26		0.4		0.33	
I_I	V_I = V_{CC} or 0	6 V		±0.1	±100		±1000		±1000	nA
I_{CC}	V_I = V_{CC} or 0, I_O = 0	6 V			8		160		80	μA
C_i		2 to 6 V		3	10		10		10	pF

timing requirements over recommended operating free-air temperature range (unless otherwise noted)

PARAMETER		V_{CC}	T_A = 25°C		SN54HC160 THRU SN54HC163		SN74HC160 THRU SN74HC163		UNIT
			MIN	MAX	MIN	MAX	MIN	MAX	
f_{clock} Clock frequency		2 V	0	6	0	4.2	0	5	MHz
		4.5 V	0	31	0	21	0	25	
		6 V	0	36	0	25	0	29	
t_w Pulse duration	CLK high or low	2 V	80		120		100		ns
		4.5 V	16		24		20		
		6 V	14		20		17		
	$\overline{CLR}$ low ('HC160, 'HC161)	2 V	80		120		100		
		4.5 V	16		24		20		
		6 V	14		20		17		
t_{su} Setup time, before CLK↑	A, B, C, or D	2 V	150		225		190		ns
		4.5 V	30		45		38		
		6 V	26		38		32		
	$\overline{LOAD}$ low	2 V	135		205		170		
		4.5 V	27		41		34		
		6 V	23		35		29		
	ENP, ENT	2 V	170		255		215		
		4.5 V	34		51		43		
		6 V	29		43		37		
	$\overline{CLR}$ inactive ('HC160, 'HC161)	2 V	125		190		155		
		4.5 V	25		38		31		
		6 V	21		32		26		
	$\overline{CLR}$ low ('HC162, 'HC163)	2 V	160		240		200		
		4.5 V	32		48		40		
		6 V	27		41		34		
	$\overline{CLR}$ inactive ('HC162, 'HC163)	2 V	160		240		200		
		4.5 V	32		48		40		
		6 V	27		41		34		
t_h Hold time, all synchronous inputs after CLK↑		2 V	0		0		0		ns
		4.5 V	0		0		0		
		6 V	0		0		0		

switching characteristics over recommended operating free-air temperature range (unless otherwise noted), C_L = 50 pF (see Note 1)

PARAMETER	FROM (INPUT)	TO (OUTPUT)	V_{CC}	T_A = 25°C			SN54HC160 SN54HC161		SN74HC160 SN74HC161		UNIT
				MIN	TYP	MAX	MIN	MAX	MIN	MAX	
f_{max}			2 V	6	14		4.2		5		MHz
			4.5 V	31	40		21		25		
			6 V	36	44		25		29		
t_{pd}	CLK	RCO	2 V		83	215		325		270	ns
			4.5 V		24	43		65		54	
			6 V		20	37		55		46	
t_{pd}	CLK	Any Q	2 V		80	205		310		255	ns
			4.5 V		25	41		62		51	
			6 V		21	35		53		43	
t_{pd}	ENT	RCO	2 V		62	195		295		245	ns
			4.5 V		17	39		59		49	
			6 V		14	33		50		42	
t_{PHL}	$\overline{CLR}$	Any Q	2 V		105	210		315		265	ns
			4.5 V		21	42		63		53	
			6 V		18	36		54		45	
t_{PHL}	$\overline{CLR}$	RCO	2 V		110	220		330		275	ns
			4.5 V		22	44		66		55	
			6 V		19	37		56		47	
t_t		Any	2 V		38	75		110		95	ns
			4.5 V		8	15		22		19	
			6 V		6	13		19		16	

C_{pd}	Power dissipation capacitance	No load, T_A = 25°C	60 pF typ

NOTE 1: Load circuit and voltage waveforms are shown in Section 1.

switching characteristics over recommended operating free-air temperature range (unless otherwise noted), C_L = 50 pF (see Note 1)

PARAMETER	FROM (INPUT)	TO (OUTPUT)	V_{CC}	T_A = 25°C			SN54HC162 SN54HC163		SN74HC162 SN74HC163		UNIT
				MIN	TYP	MAX	MIN	MAX	MIN	MAX	
f_{max}			2 V	6	14		4.2		5		MHz
			4.5 V	31	40		21		25		
			6 V	36	44		25		29		
t_{pd}	CLK	RCO	2 V		83	215		325		270	ns
			4.5 V		24	43		65		54	
			6 V		20	37		55		46	
t_{pd}	CLK	Any Q	2 V		80	205		310		255	ns
			4.5 V		25	41		62		51	
			6 V		21	35		53		43	
t_{pd}	ENT	RCO	2 V		62	195		295		245	ns
			4.5 V		17	39		59		49	
			6 V		14	33		50		42	
t_t		Any	2 V		38	75		110		95	ns
			4.5 V		8	15		22		19	
			6 V		6	13		19		16	

C_{pd}	Power dissipation capacitance	No load, T_A = 25°C	60 pF typ

NOTE 1: Load circuit and voltage waveforms are shown in Section 1.

TYPICAL APPLICATION DATA

N-BIT SYNCHRONOUS COUNTERS

This application demonstrates how the look-ahead carry circuit can be used to implement a high-speed n-bit counter. The 'HC160 and 'HC162 will count in BCD, and the 'HC161 and 'HC163 will count in binary. Virtually any count mode (modulo-N, N_1-to-N_2, N_1-to-maximum) can be used with this fast look-ahead circuit.

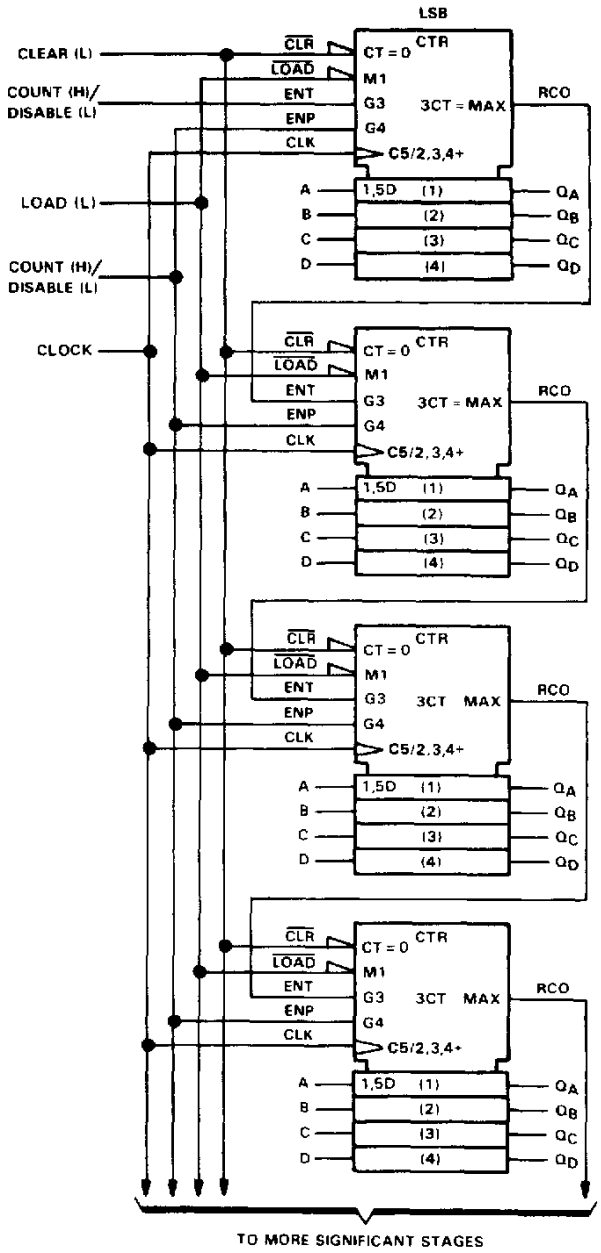

The application circuit shown on the preceding page is not valid for clock frequencies above 18 MHz (at 25 °C and 4.5 V V_{CC}). The reason for this is that there is a "glitch" that is produced on the second stage's RCO output and every succeeding stage's RCO output. This glitch is common to all HC vendors that Texas Instruments has evaluated in addition to the bipolar equivalents ('LS, 'ALS, 'AS).

The glitch on RCO is caused because the propagation delay of the rising edge of Q_A of the second stage is shorter than the propagation delay of the falling edge of ENT. The RCO output is the product of ENT, Q_A, Q_B, Q_C, and Q_D ($ENT \cdot Q_A \cdot Q_B \cdot Q_C \cdot Q_D$). The resulting glitch is about 7-12 ns in duration. Figure 1 illustrates the condition in which the glitch occurs. For the purposes of simplicity, only two stages are being considered, but the results can be applied to other stages. Q_B, Q_C, and Q_D of the first and second stage are at logic one, and Q_A of both stages are at logic zero (1110 1110) after the first clock pulse. On the rising edge of the second clock pulse, Q_A and RCO of the first stage will go high. On the rising edge of the third clock pulse Q_A and RCO of the first stage will return to a low level, and Q_A of the second stage will go to a high level. It is at this time that the glitch on the RCO of the second stage will appear because of the "race condition" inside the chip.

The glitch will cause a problem in the next stage (stage three) if the glitch is still present when the next rising clock edge appears (clock pulse 4). To ensure that this does not happen, the clock frequency must be less than inverse of the sum of the clock-to-RCO propagation delay and the glitch duration (t_g). In other words, $f_{max} = 1/(t_{pd}$ CLK-to-RCO $+ t_g)$. For example, at 25 °C at 4.5 V V_{CC}, the clock-to-RCO propagation delay is 43 ns and the maximum duration of the glitch is 12 ns. Therefore, the maximum clock frequency that the cascaded counters can use is 18 MHz. The following table contains the f_{clock}, t_w, and f_{max} specifications for applications that use more than two 'HC160 family devices cascaded together.

timing requirements over recommended operating free-air temperature range (unless otherwise noted)

PARAMETER		V_{CC}	T_A = 25 °C		SN54HC160 thru SN54HC163		SN74HC160 thru SN74HC163		UNIT
			MIN	MAX	MIN	MAX	MIN	MAX	
f_{clock}	Clock frequency	2 V	0	3.6	0	2.5	0	2.9	MHz
		4.5 V	0	18	0	12	0	14	
		6 V	0	21	0	14	0	17	
t_w	Pulse duration, CLK high or low	2 V	140		200		170		ns
		4.5 V	28		40		36		
		6 V	24		36		30		

switching characteristics over recommended operating free-air temperature range (unless otherwise noted), C_L = 50 pF (see Note 1)

PARAMETER	FROM (INPUT)	TO (OUTPUT)	V_{CC}	T_A = 25 °C			SN54HC160 thru SN54HC163		SN74HC160 thru SN74HC163		UNIT
				MIN	TYP	MAX	MIN	MAX	MIN	MAX	
f_{max}			2 V	3.6			2.5		2.9		MHz
			4.5 V	18			12		14		
			6 V	21			14		17		

NOTE 1: These limits apply only to applications which use more than two 'HC160 family devices cascaded together.

If the 'HC160 family is used as a single unit or only two cascaded together, then the maximum clock frequency that the devices can use is not limited because of the glitch. In these situations, the devices can be operated at the maximum specifications.

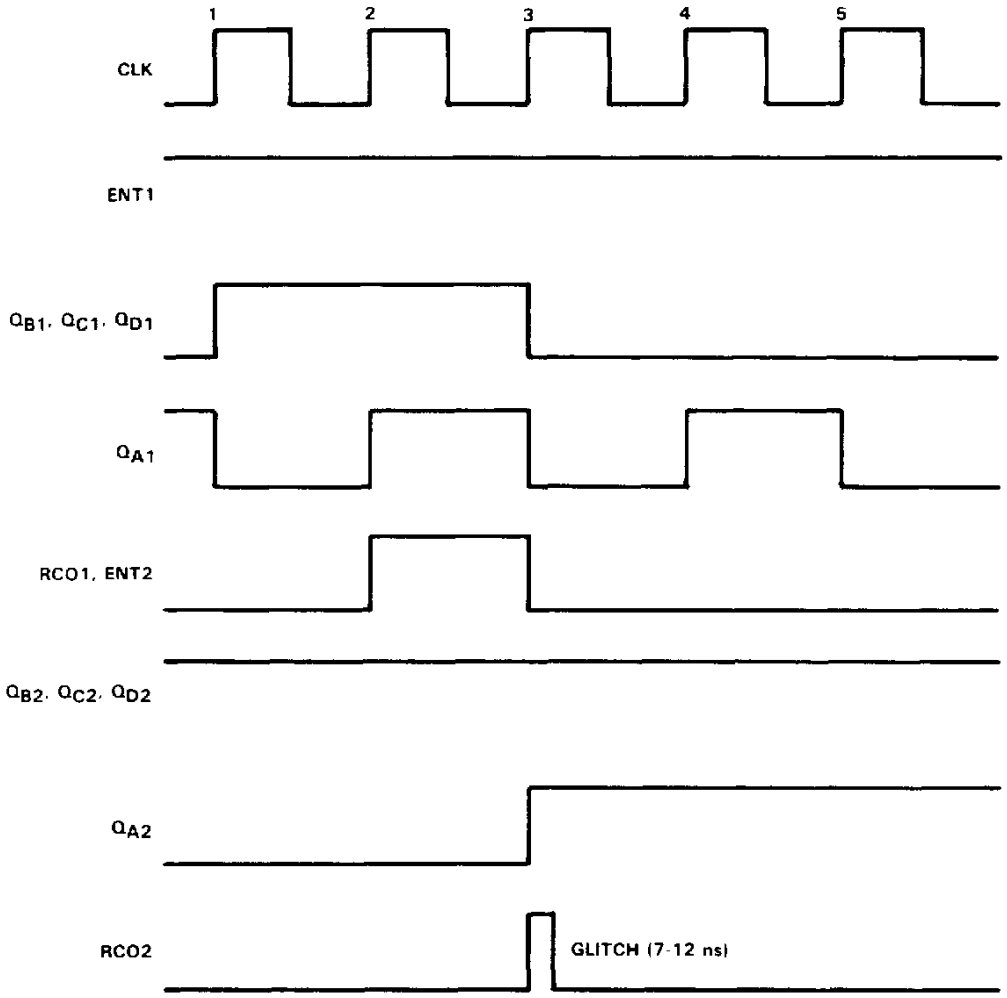

FIGURE 1

A glitch can appear on the RCO output of a single 'HC160 family device depending on the relationship of ENT to the clock input. Any application that uses the RCO output to drive any input except an ENT of another cascaded 'HC160 family device must take this into consideration.

TAPE AND REEL INFORMATION

REEL DIMENSIONS

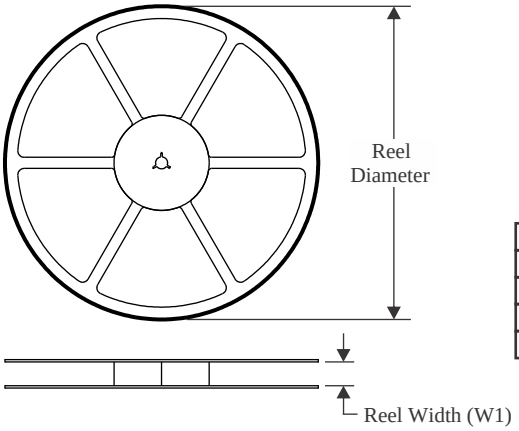

TAPE DIMENSIONS

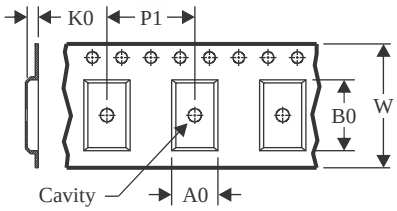

A0	Dimension designed to accommodate the component width
B0	Dimension designed to accommodate the component length
K0	Dimension designed to accommodate the component thickness
W	Overall width of the carrier tape
P1	Pitch between successive cavity centers

QUADRANT ASSIGNMENTS FOR PIN 1 ORIENTATION IN TAPE

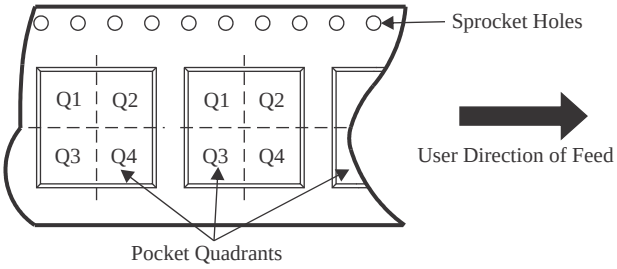

*All dimensions are nominal

Device	Package Type	Package Drawing	Pins	SPQ	Reel Diameter (mm)	Reel Width W1 (mm)	A0 (mm)	B0 (mm)	K0 (mm)	P1 (mm)	W (mm)	Pin1 Quadrant
SN74HC161DR	SOIC	D	16	2500	330.0	16.4	6.5	10.3	2.1	8.0	16.0	Q1
SN74HC161NSR	SO	NS	16	2000	330.0	16.4	8.2	10.5	2.5	12.0	16.0	Q1
SN74HC161PWR	TSSOP	PW	16	2000	330.0	12.4	6.9	5.6	1.6	8.0	12.0	Q1

TAPE AND REEL BOX DIMENSIONS

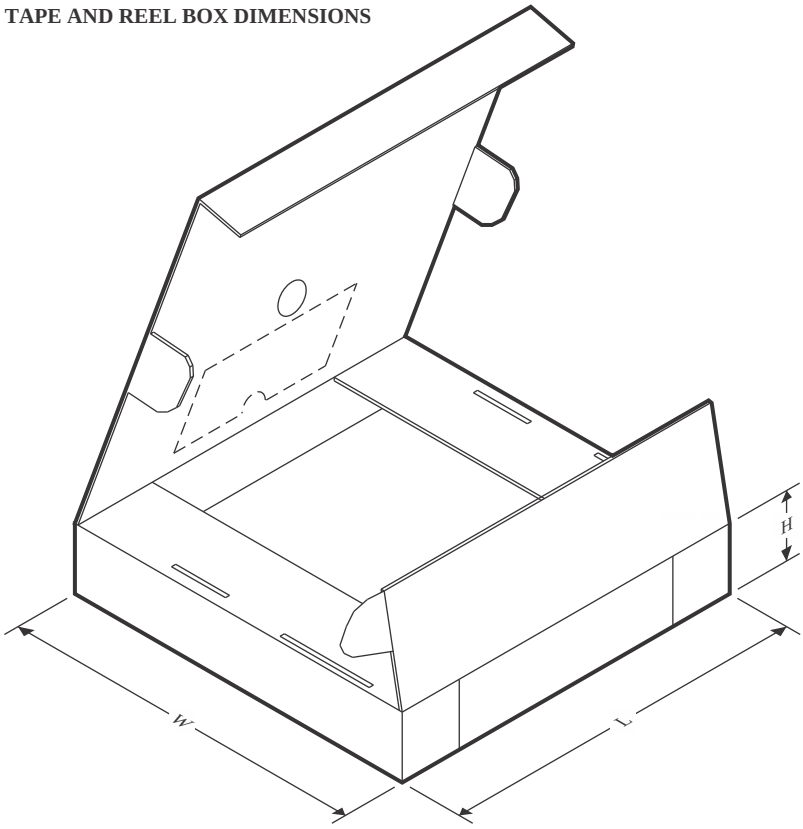

*All dimensions are nominal

Device	Package Type	Package Drawing	Pins	SPQ	Length (mm)	Width (mm)	Height (mm)
SN74HC161DR	SOIC	D	16	2500	353.0	353.0	32.0
SN74HC161NSR	SO	NS	16	2000	356.0	356.0	35.0
SN74HC161PWR	TSSOP	PW	16	2000	356.0	356.0	35.0

TUBE

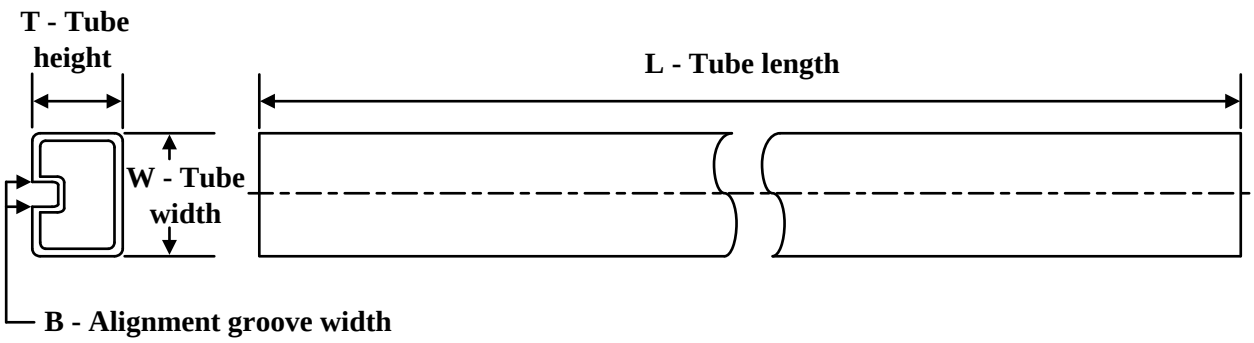

*All dimensions are nominal

Device	Package Name	Package Type	Pins	SPQ	L (mm)	W (mm)	T (µm)	B (mm)
84075012A	FK	LCCC	20	55	506.98	12.06	2030	NA
8407501FA	W	CFP	16	25	506.98	26.16	6220	NA
86076012A	FK	LCCC	20	55	506.98	12.06	2030	NA
SN74HC161N	N	PDIP	16	25	506	13.97	11230	4.32
SN74HC161N	N	PDIP	16	25	506	13.97	11230	4.32
SNJ54HC161FK	FK	LCCC	20	55	506.98	12.06	2030	NA
SNJ54HC161W	W	CFP	16	25	506.98	26.16	6220	NA
SNJ54HC163FK	FK	LCCC	20	55	506.98	12.06	2030	NA

IMPORTANT NOTICE AND DISCLAIMER

TI PROVIDES TECHNICAL AND RELIABILITY DATA (INCLUDING DATA SHEETS), DESIGN RESOURCES (INCLUDING REFERENCE DESIGNS), APPLICATION OR OTHER DESIGN ADVICE, WEB TOOLS, SAFETY INFORMATION, AND OTHER RESOURCES “AS IS” AND WITH ALL FAULTS, AND DISCLAIMS ALL WARRANTIES, EXPRESS AND IMPLIED, INCLUDING WITHOUT LIMITATION ANY IMPLIED WARRANTIES OF MERCHANTABILITY, FITNESS FOR A PARTICULAR PURPOSE OR NON-INFRINGEMENT OF THIRD PARTY INTELLECTUAL PROPERTY RIGHTS.

These resources are intended for skilled developers designing with TI products. You are solely responsible for (1) selecting the appropriate TI products for your application, (2) designing, validating and testing your application, and (3) ensuring your application meets applicable standards, and any other safety, security, regulatory or other requirements.

These resources are subject to change without notice. TI grants you permission to use these resources only for development of an application that uses the TI products described in the resource. Other reproduction and display of these resources is prohibited. No license is granted to any other TI intellectual property right or to any third party intellectual property right. TI disclaims responsibility for, and you will fully indemnify TI and its representatives against, any claims, damages, costs, losses, and liabilities arising out of your use of these resources.

TI’s products are provided subject to TI’s Terms of Sale or other applicable terms available either on ti.com or provided in conjunction with such TI products. TI’s provision of these resources does not expand or otherwise alter TI’s applicable warranties or warranty disclaimers for TI products.

TI objects to and rejects any additional or different terms you may have proposed.

Mailing Address: Texas Instruments, Post Office Box 655303, Dallas, Texas 75265
Copyright © 2024, Texas Instruments Incorporated