LM2902-Q1, LM2902B-Q1, and LM2902BA-Q1 Industry-Standard Quad Operational Amplifiers for Automotive Applications

1 Features

- AEC Q-100 qualified for automotive applications
  - Temperature grade 1: –40°C to +125°C
  - Device HBM ESD classification 2
  - Device CDM ESD classification C5
- Wide supply range of:
  - 3 V to 36 V (LM2902B-Q1 and LM2902BA-Q1)
  - 3 V to 32 V (LM2902KV and LM2902KAV)
  - 3 V to 26 V (all other products)
- Input offset voltage maximum at 25°C of:
  - 2 mV (LM2902BA-Q1 and LM2902KAV)
  - 3 mV (LM2902B-Q1)
  - 7 mV (all other products)
- Internal RF and EMI filter (LM2902B-Q1 and LM2902BA-Q1)
- Supply-current of 175 µA per channel, typical
- Unity-gain bandwidth of 1.2 MHz
- Common-mode input voltage range includes V–
- Differential input voltage range equal to maximum-rated supply voltage

2 Applications

- Automotive lighting
- Body electronics
- Automotive head unit
- Telematics control unit
- Emergency call (eCall)
- Passive safety: brake system
- Electric vehicle / hybrid electric:
  - Inverter and motor control
  - On-board (OBC) and wireless charger
  - Battery management system (BMS)

3 Description

The LM2902-Q1, LM2902B-Q1, and LM2902BA-Q1 are industry-standard operational amplifiers that have been qualified for automotive use in accordance to the AEC-Q100 specifications. The LM2902B-Q1 and LM2902BA-Q1 are the next-generation versions of the LM2902-Q1, which include four high-voltage (36 V) operational amplifiers (op amps). The LM2902B-Q1 and LM2902BA-Q1 provide outstanding value for cost-sensitive applications, with features including low offset (3 mV and 2 mV maximum, respectively), common-mode input range to ground, and high differential input voltage capability.

The LM2902B-Q1 and LM2902BA-Q1 simplify circuit design with enhanced features such as unity-gain stability, lower offset voltage of 0.3 mV (typical), and lower quiescent current of 240 µA (typical). High ESD (2 kV, HBM) and integrated EMI and RF filters enable the LM2902B-Q1 and LM2902BA-Q1 devices to be used in the most rugged, environmentally challenging applications for the automotive marketplace.

Device Information

PART NUMBER (1)	CHANNEL COUNT	PACKAGE	PACKAGE SIZE
LM2902B-Q1	Quad	D (SOIC, 14)[2]	8.65 mm × 6 mm
		PW (TSSOP, 14)	5 mm × 6.4 mm
LM2902BA-Q1		D (SOIC, 14)[2]	8.65 mm × 6 mm
		PW (TSSOP, 14)	5 mm × 6.4 mm
LM2902-Q1		D (SOIC, 14)	8.65 mm × 6 mm
		PW (TSSOP, 14)	5 mm × 6.4 mm

(1) For all available packages, see the orderable addendum at the end of the data sheet.
(2) This product is preview only.

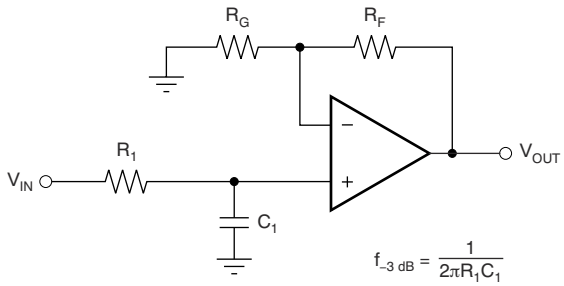

$$\frac{V_{OUT}}{V_{IN}} = \left(1 + \frac{R_F}{R_G}\right)\left(\frac{1}{1 + sR_1C_1}\right)$$

Single-Pole, Low-Pass Filter

An IMPORTANT NOTICE at the end of this data sheet addresses availability, warranty, changes, use in safety-critical applications, intellectual property matters and other important disclaimers. PRODUCTION DATA.

Table of Contents

1 Features....1
2 Applications....1
3 Description....1
4 Revision History....2
5 Pin Configurations and Functions....4
6 Specifications....5
6.1 Absolute Maximum Ratings....5
6.2 ESD Ratings....5
6.3 Recommended Operating Conditions....5
6.4 Thermal Information....6
6.5 Electrical Characteristics - LM2902B-Q1 and LM2902BA-Q1....6
6.6 Electrical Characteristics: LM2902-Q1, LM2902KV-Q1, LM2902KAV-Q1....8
6.7 Operating Conditions: LM2902-Q1, LM2902KV-Q1, LM2902KAV-Q1....9
6.8 Typical Characteristics....10
7 Parameter Measurement Information....16
8 Detailed Description....17
8.1 Overview....17
8.2 Functional Block Diagram....17
8.3 Feature Description....17
8.4 Device Functional Modes....18
9 Application and Implementation....19
9.1 Application Information....19
9.2 Typical Application....19
9.3 Power Supply Recommendations....20
9.4 Layout....20
10 Device and Documentation Support....22
10.1 Documentation Support....22
10.2 Receiving Notification of Documentation Updates....22
10.3 Support Resources....22
10.4 Trademarks....22
10.5 Electrostatic Discharge Caution....22
10.6 Glossary....22
11 Mechanical, Packaging, and Orderable Information....22

4 Revision History

NOTE: Page numbers for previous revisions may differ from page numbers in the current version.

Changes from Revision G (February 2023) to Revision H (October 2023)	Page
• Changed the format of *Package Information* table to include package lead size and channel count	1
• Changed the status of the LM2902BA-Q1 TSSOP-14 package from: *preview* to: *active*	1

Changes from Revision F (May 2022) to Revision G (February 2023)	Page
• Deleted the preview note for the LM2902B-Q1 TSSOP-14 package in the *Device Information* table	1
• Changed the LM2902B-Q1 values in the *Thermal Information* section	6
• Added *Typical Characteristics* curves for LM2902B-Q1 and LM2902BA-Q1	10

Changes from Revision E (April 2008) to Revision F (May 2022)	Page
• Changed the name of the data sheet	1
• Revised *Features* section to include LM2902B-Q1 and LM2902BA-Q1	1
• Added *Applications* section	1
• Added LM2902B-Q1 and LM2902BA-Q1 to the *Device Information* table	1
• Added LM2902B-Q1 and LM2902BA-Q1 to the *Description* section	1
• Updated *Pin Configurations and Functions* section to include *Pin Functions* table	4
• Added LM2902B-Q1 and LM2902BA-Q1 to the *Absolute Maximum Ratings* table	5
• Added *ESD Ratings* table with LM2902B-Q1 and LM2902BA-Q1	5
• Added LM2902B-Q1 and LM2902B-Q1 to *Recommended Operating Conditions* section	5
• Added LM2902B-Q1 and LM2902BA-Q1 to *Thermal Information* section	6
• Added *Overview* section to the data sheet	17
• Added *Feature Description* section	17
• Added *Input Common Mode Range* section to *Feature Description* section	17
• Added *Device Functional Modes* information for LM2902B-Q1 and LM2902BA-Q1	18
• Added *Application and Implementation* section for LM2902B-Q1 and LM2902BA-Q1	19
• Added *Application Information* section for LM2902B-Q1 and LM2902BA-Q1	19
• Added *Typical Application* section for LM2902B-Q1 and LM2902BA-Q1	19
• Added *Power Supply Recommendations* section to data sheet	20

Copyright © 2023 Texas Instruments Incorporated

- Added *Layout* section to data sheet..... 20
- Added *Device and Documentation Support* section to data sheet..... 22
- Added *Mechanical, Packaging, and Orderable Information* section to data sheet..... 22

5 Pin Configurations and Functions

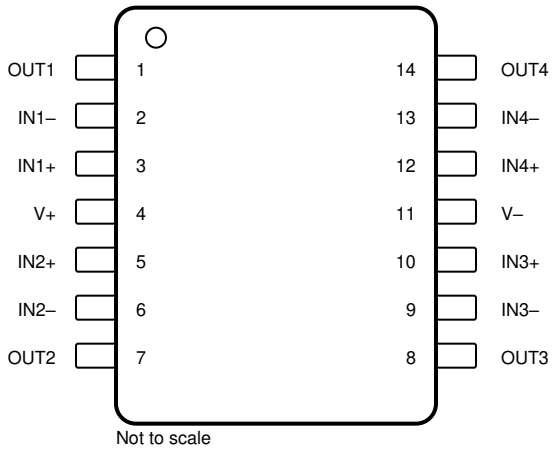

Figure 5-1. D and PW Package 14-Pin SOIC and TSSOP (Top View)

Table 5-1. Pin Functions

PIN		I/O	DESCRIPTION
NAME	NO.		
IN1–	2	I	Inverting input, channel 1
IN1+	3	I	Noninverting input, channel 1
IN2–	6	I	Inverting input, channel 2
IN2+	5	I	Noninverting input, channel 2
IN3–	9	I	Inverting input, channel 3
IN3+	10	I	Noninverting input, channel 3
IN4–	13	I	Inverting input, channel 4
IN4+	12	I	Noninverting input, channel 4
NC	—	—	No internal connection
OUT1	1	O	Output, channel 1
OUT2	7	O	Output, channel 2
OUT3	8	O	Output, channel 3
OUT4	14	O	Output, channel 4
V–	11	—	Negative (lowest) supply or ground (for single-supply operation)
V+	4	—	Positive (highest) supply

Copyright © 2023 Texas Instruments Incorporated

6 Specifications

6.1 Absolute Maximum Ratings

For T_A = 25°C (unless otherwise noted)[1]

	LM2902B-Q1, LM2902BA-Q1	LM2902-Q1	LM2902KV-Q1	UNIT
Supply voltage, V_{CC} [2]	40	26	32	V
Differential input voltage, V_{ID} [3]	±40	±26	±32	V
Input voltage, V_I	–0.3 to 40	–0.3 to 26	–0.3 to 32	V
Duration of output short circuit (one amplifier) to ground at (or below) T_A = 25°C, V_{CC} ≤ 15 V[4]	Unlimited	Unlimited	Unlimited	
Operating virtual junction temperature, T_J	150	142	142	°C
Storage temperature range, T_{stg}	–65 to 150	–65 to 150	–65 to 150	°C

(1) Stresses beyond those listed under *Absolute Maximum Ratings* may cause permanent damage to the device. These are stress ratings only, which do not imply functional operation of the device at these or any other conditions beyond those indicated under *Recommended Operating Conditions*. Exposure to absolute-maximum-rated conditions for extended periods may affect device reliability.
(2) All voltage values are with respect to network ground terminal GND.
(3) Differential voltages are at IN+ with respect to IN−.
(4) Short circuits from outputs to V_{CC} can cause excessive heating and eventual destruction.

6.2 ESD Ratings

			VALUE	UNIT
LM2902B-Q1 and LM2902BA-Q1				
$V_{(ESD)}$	Electrostatic discharge	Human-body model (HBM), per AEC Q100-002[1]	±2000	V
		Charged-device model (CDM), per AEC Q100-011	±1500	
LM2902KV-Q1 and LM2902KAV-Q1				
$V_{(ESD)}$	Electrostatic discharge	Human-body model (HBM), per AEC Q100-002[1]	±2000	V
		Charged-device model (CDM), per AEC Q100-011	±2000	
LM2902-Q1				
$V_{(ESD)}$	Electrostatic discharge	Charged-device model (CDM), per AEC Q100-011	±1500	V

(1) AEC Q100-002 indicates that HBM stressing shall be in accordance with the ANSI/ESDA/JEDEC JS-001 specification.

6.3 Recommended Operating Conditions

over operating ambient temperature range (unless otherwise noted)

			MIN	MAX	UNIT
V_S	Supply voltage, V_S = ([V+] – [V–])	LM2902B-Q1, LM2902BA-Q1	3	36	V
		LM2902KV-Q1, LM2902KAV-Q1	3	30	
		LM2902-Q1	3	26	
V_{CM}	Common-mode voltage		V–	(V+) – 2	V
T_A	Operating ambient temperature		–40	125	°C

6.4 Thermal Information

THERMAL METRIC[1]		LM2902-Q1, LM2902KV-Q1, LM2902KAV-Q1		LM2902B-Q1, LM2902BA-Q1		UNIT
		D (SOIC)	PW (TSSOP)	D (SOIC)	PW (TSSOP)	
		14 PINS	14 PINS	14 PINS	14 PINS	
$R_{\theta JA}$	Junction-to-ambient thermal resistance	101	86	TBD	133.3	°C/W
$R_{\theta JC}$	Junction-to-case (top) thermal resistance	—	—	TBD	63.4	°C/W
$R_{\theta JB}$	Junction-to-board thermal resistance	—	—	TBD	76.5	°C/W
ψ_{JT}	Junction-to-top characterization parameter	—	—	TBD	15.6	°C/W
ψ_{JB}	Junction-to-board characterization parameter	—	—	TBD	75.9	°C/W

(1) For more information about traditional and new thermal metrics, see the *Semiconductor and IC package thermal metrics* application report.

6.5 Electrical Characteristics - LM2902B-Q1 and LM2902BA-Q1

For V_S = (V+) – (V–) = 5 V to 36 V (±2.5 V to ±18 V), at T_A = 25°C, V_{CM} = V_{OUT} = V_S / 2, and R_L = 10kΩ connected to V_S / 2 (unless otherwise noted)

PARAMETER		TEST CONDITIONS			MIN	TYP	MAX	UNIT
OFFSET VOLTAGE								
V_{OS}	Input offset voltage	LM2902B-Q1				±0.3	±3.0	mV
				T_A = –40°C to 125°C			±4.0	
		LM2902BA-Q1				±0.3	±2	
				T_A = –40°C to 125°C			±2.5	
dV_{OS}/dT	Input offset voltage drift	R_S = 0 Ω		T_A = –40°C to 125°C		±7		μV/°C
PSRR	Input offset voltage versus power supply				65	100		dB
	Channel separation	f = 1 kHz to 20 kHz				120		dB
INPUT VOLTAGE RANGE								
V_{CM}	Common-mode voltage range	V_S = 3 V to 36 V			V–		(V+) – 1.5	V
		V_S = 5 V to 36 V		T_A = –40°C to 125°C	V–		(V+) – 2	
CMRR	Common-mode rejection ratio	(V–) ≤ V_{CM} ≤ (V+) – 1.5 V	V_S = 3 V to 36 V		70	80		dB
		(V–) ≤ V_{CM} ≤ (V+) – 2 V	V_S = 5 V to 36 V	T_A = –40°C to 125°C	65	80		
INPUT BIAS CURRENT								
I_B	Input bias current					-10	-35	nA
				T_A = –40°C to 125°C			-50	
dI_{OS}/dT	Input offset current drift			T_A = –40°C to 125°C		10		pA/°C
I_{OS}	Input offset current					±0.5	±4	nA
				T_A = –40°C to 125°C			±5	
dI_{OS}/dT	Input offset current drift			T_A = –40°C to 125°C		10		pA/°C
NOISE								
E_N	Input voltage noise	f = 0.1 to 10 Hz				3		μV_{PP}
e_N	Input voltage noise density	R_S = 100 Ω, V_I = 0 V, f = 1 kHz (see Figure 8)				35		nV/√Hz
INPUT IMPEDANCE								
Z_{ID}	Differential					10 || 0.1		MΩ || pF
Z_{ICM}	Common-mode					4 || 1.5		GΩ || pF
OPEN-LOOP GAIN								
A_{OL}	Open-loop voltage gain	V_S = 15 V, V_O = 1 V to 11 V, R_L ≥ 10 kΩ, connected to (V-)			50	100		V/mV
				T_A = –40°C to 125°C	25			
FREQUENCY RESPONSE								
GBW	Gain-bandwidth product	R_L = 1 MΩ, C_L = 20 pF (see Figure 7)				1.2		MHz
SR	Slew rate	R_L = 1 MΩ, C_L = 30 pF, V_I = ±10 V (see Figure 7)				0.5		V/μs
Θ_m	Phase margin	G = + 1, R_L = 10kΩ, C_L = 20 pF				56		°
t_S	Settling time	To 0.1%, V_S = 5 V, 2-V Step , G = +1, C_L = 100 pF				4		μs
	Overload recovery time	V_{IN} × gain > V_S				10		μs

Copyright © 2023 Texas Instruments Incorporated

6.5 Electrical Characteristics - LM2902B-Q1 and LM2902BA-Q1 (continued)

For V_S = (V+) – (V–) = 5 V to 36 V (±2.5 V to ±18 V), at T_A = 25°C, V_{CM} = V_{OUT} = V_S / 2, and R_L = 10kΩ connected to V_S / 2 (unless otherwise noted)

PARAMETER		TEST CONDITIONS			MIN	TYP	MAX	UNIT
THD+N	Total harmonic distortion + noise	G = + 1, f = 1 kHz, V_O = 3.53 V_{RMS}, V_S = 36V, R_L = 100k, I_{OUT} ≤ 50µA, BW = 80 kHz				0.001%		
OUTPUT								
V_O	Voltage output swing from rail	Positive Rail (V+)		I_{OUT} = -50 µA		1.35	1.5	V
V_O				I_{OUT} = -1 mA		1.4	1.6	V
V_O				I_{OUT} = -5 mA		1.5	1.75	V
V_O		Negative Rail (V-)		I_{OUT} = 50 µA		100	150	mV
V_O				I_{OUT} = 1 mA		0.75	1	V
V_O			V_S = 5 V, RL ≤ 10 kΩ connected to (V–)	T_A = –40°C to 125°C		5	20	mV
I_O	Output current	V_S = 15 V; V_O = V-; V_{ID} = 1 V	Source		-20[(1)]	-30		mA
				T_A = –40°C to 125°C	-10[(1)]			mA
		V_S = 15 V; V_O = V+; V_{ID} = -1 V	Sink		10[(1)]	20		mA
				T_A = –40°C to 125°C	5[(1)]			mA
		V_{ID} = -1 V; V_O = (V-) + 200 mV			50	85		µA
I_{SC}	Short-circuit current	V_S = 20 V, (V+) = 10 V, (V-) = -10 V, V_O = 0 V				±40	±60	mA
C_{LOAD}	Capacitive load drive					100		pF
R_O	Open-loop output impedance	f = 1 MHz, I_O = 0 A				300		Ω
POWER SUPPLY								
I_Q	Quiescent current per amplifier	V_S = 5 V; I_O = 0 A		T_A = –40°C to 125°C		175	300	µA
		V_S = 36 V; I_O = 0 A		T_A = –40°C to 125°C		350	750	µA

(1) Specified by design and characterization only.

6.6 Electrical Characteristics: LM2902-Q1, LM2902KV-Q1, LM2902KAV-Q1

For $V_S = (V_+) – (V_–) = 5$ V, at $T_A = 25°C$ (unless otherwise noted)

PARAMETER		TEST CONDITIONS		TA[1]	MIN	TYP[2]	MAX	UNIT
V_{IO}	Input offset voltage	V_{CC} = 5 V to 26 V, $V_{IC} = V_{ICR}$min, V_O = 1.4 V		25°C		3	7	mV
				Full Range			10	
I_{IO}	Input offset current	V_O = 1.4 V		25°C		2	50	nA
				Full Range			300	
I_{IB}	Input bias current	V_O = 1.4 V		25°C		–20	–250	nA
				Full Range			–500	
V_{ICR}	Common-mode input voltage range	V_{CC} = 5 V to 26 V		25°C	V-		(V+) - 1.5	V
				Full Range	V-		(V+) - 2	
V_{OH}	High-level output voltage	R_L = 10 kΩ		25°C	(V+) – 1.5			V
		V_{CC} = 26 V,	R_L = 2 kΩ	Full Range	22			
		V_{CC} = 26 V	R_L ≥ 10 kΩ	Full Range	23	24		
V_{OL}	Low-level output voltage	R_L ≤ 10 kΩ		Full Range		5	20	mV
A_{VD}	Large-signal differential voltage amplification	V_{CC}= 15 V, V_O= 1 V to 11 V, R_L ≥ 2 kΩ		25°C		100		V/mV
				Full Range	15			
CMRR	Common-mode rejection ratio	$V_{IC} = V_{ICR}$min		25°C	50	80		dB
k_{SVR}	Supply-voltage rejection ratio ($\Delta V_{CC} / \Delta V_{IO}$)			25°C	50	100		dB
V_{O1}/ V_{O2}	Crosstalk attenuation	f = 1 kHz to 20 kHz		25°C		120		dB
I_O	Output current	V_{CC} = 15 V, V_O = 0	V_{ID} = 1 V,	25°C	–20	–30	–60	mA
				Full Range	–10			
		V_{CC} = 15 V, V_O = 15 V	V_{ID} = −1 V,	25°C	10	20		
				Full Range	5			
		V_{ID} = −1 V	V_O = 200 mV	25°C		30		μA
I_{OS}	Short-circuit output current	V_{CC} at 5 V, GND at −5 V	V_O = 0	25°C		±40	±60	mA
I_{CC}	Supply current (four amplifiers)	V_O = 2.5 V	No load	Full Range		0.7	1.2	mA
		V_{CC} = 26 V, V_O = 0.5 V_{CC}	No load	Full Range		1.4	3	
V_{IO}	Input offset voltage	V_{CC} = 5 V to 32 V, $V_{IC} = V_{ICR}$min V_O = 1.4 V	Non-A devices	25°C		3	7	mV
				Full Range			10	
			A-suffix devices	25°C		1	2	
				Full Range			4	
$\Delta V_{IO}/\Delta T$	Temperature drift	R_S = 0 Ω		Full Range		7		μV/°C
I_{IO}	Input offset current	V_O = 1.4 V		25°C		2	50	nA
				Full Range			150	
$\Delta I_{IO}/\Delta T$	Temperature drift			Full Range		10		pA/°C
I_{IB}	Input bias current	V_O = 1.4 V		25°C		–20	–250	nA
				Full Range			–500	
V_{ICR}	Common-mode input voltage range	V_{CC} = 5 V to 32 V		25°C	0 to V_{CC}– 1.5			V
				Full Range	0 to V_{CC} – 2			
V_{OH}	High-level output voltage	R_L = 10 kΩ		25°C	V_{CC} – 1.5			V
		V_{CC} = 32 V	R_L = 2 kΩ	Full Range	26			
		V_{CC} = 32 V	R_L ≥ 10 kΩ	Full Range	27			
V_{OL}	Low-level output voltage	R_L ≤ 10 kΩ		Full Range		5	20	mV

Copyright © 2023 Texas Instruments Incorporated

6.6 Electrical Characteristics: LM2902-Q1, LM2902KV-Q1, LM2902KAV-Q1 (continued)

For $V_S = (V_+) – (V_–) = 5$ V, at $T_A = 25°C$ (unless otherwise noted)

PARAMETER		TEST CONDITIONS		TA[1]	MIN	TYP[2]	MAX	UNIT
A_{VD}	Large-signal differential voltage amplification	V_{CC} = 15 V, V_O = 1 V to 11 V, $R_L \geq 2$ kΩ		25°C	25	100		V/mV
				Full Range	15			
	Amplifier-to-amplifier coupling[3]	f = 1 kHz to 20 kHz, input referred		25°C		120		dB
CMRR	Common-mode rejection ratio	$V_{IC} = V_{ICR}$min		25°C	60	80		dB
k_{SVR}	Supply-voltage rejection ratio ($\Delta V_{CC} / \Delta V_{IO}$)			25°C	60	100		dB
V_{O1}/ V_{O2}	Crosstalk attenuation	f = 1 kHz to 20 kHz		25°C		120		dB
I_O	Output current	V_{CC} = 15, V_O = 0	V_{ID} = 1 V	25°C	–20	–30	–60	mA
				Full Range	–10			
		V_{CC} = 15, V_O = 15 V	V_{ID} = −1 V	25°C	10	20		
				Full Range	5			
		V_{ID} = −1 V	V_O = 200 mV	25°C	12	40		μA
I_{OS}	Short-circuit output current	V_{CC} at 5 V, GND at −5 V	V_O = 0	25°C		±40	±60	mA
I_{CC}	Supply current (four amplifiers)	V_O = 2.5 V	No load	Full Range		0.7	1.2	mA
		V_{CC} = 32 V, V_O = 0.5 V_{CC}	No load	Full Range		1.4	3	

(1) Full range is −40°C to 125°C.
(2) All typical values are at $T_A = 25°C$
(3) Due to proximity of external components, ensure that coupling is not originating via stray capacitance between these external parts. Typically, this can be detected, as this type of coupling increases at higher frequencies.

6.7 Operating Conditions: LM2902-Q1, LM2902KV-Q1, LM2902KAV-Q1

For $V_S = (V_+) – (V_–) = 15$ V, at $T_A = 25°C$

PARAMETER		TEST CONDITIONS	TYP	UNIT
SR	Slew rate at unity gain	R_L = 1 MΩ, C_L = 30 pF, V_I = ±10 V (see Figure 7-1)	0.5	V/μs
B_1	Unity-gain bandwidth	R_L = 1 MΩ, C_L = 20 pF (see Figure 7-1)	1.2	MHz
V_N	Equivalent input noise voltage	R_S = 100 Ω, V_I = 0 V, f = 1 kHz (see Figure 7-2)	35	nV/√Hz

Copyright © 2023 Texas Instruments Incorporated

6.8 Typical Characteristics

This typical characteristics section is applicable for LM2902B-Q1 and LM2902BA-Q1. Typical characteristics data in this section was taken with T_A = 25°C, V_S = 36 V (±18 V), V_{CM} = V_S / 2, R_{LOAD} = 10 kΩ connected to V_S / 2 (unless otherwise noted).

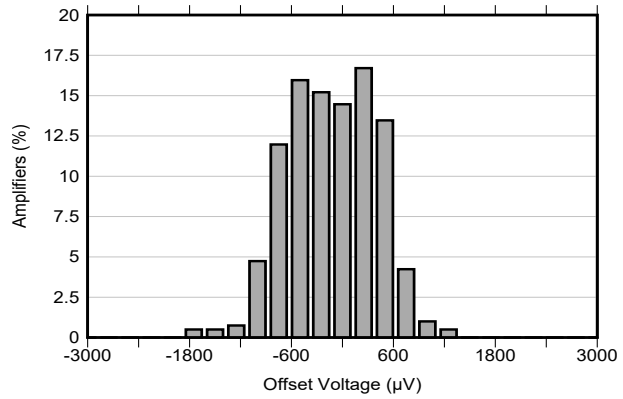

Figure 6-1. Offset Voltage Production Distribution

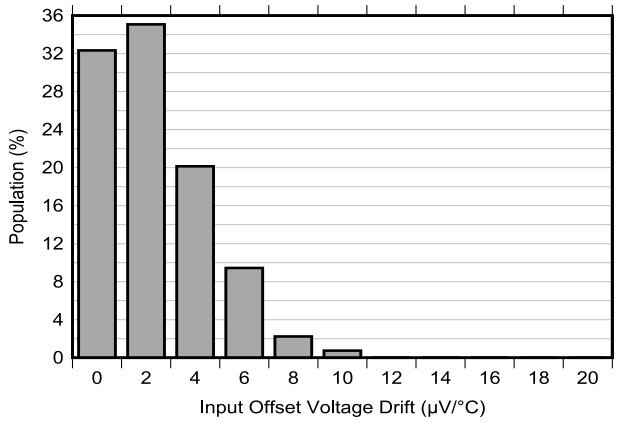

Figure 6-2. Offset Voltage Drift Distribution

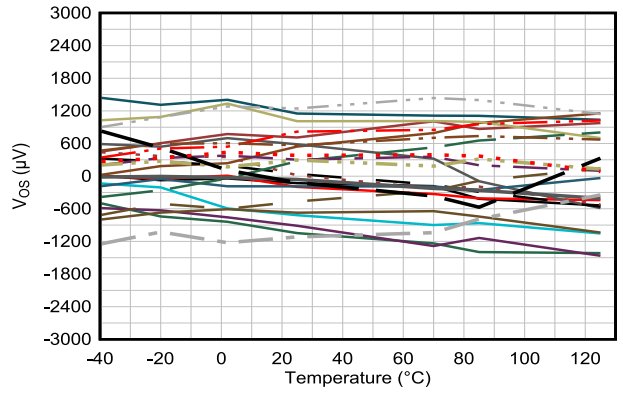

Figure 6-3. Offset Voltage vs Temperature

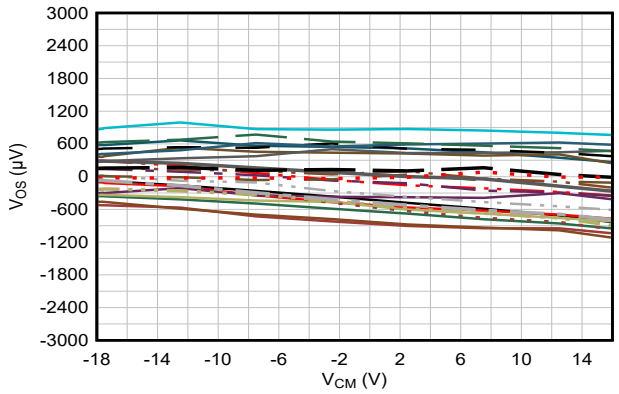

Figure 6-4. Offset Voltage vs Common-Mode Voltage

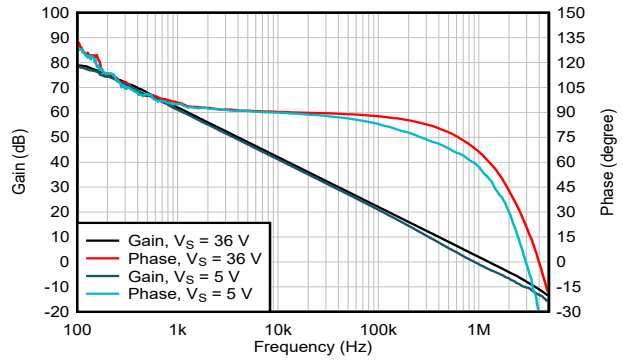

Figure 6-5. Open-Loop Gain and Phase vs Frequency

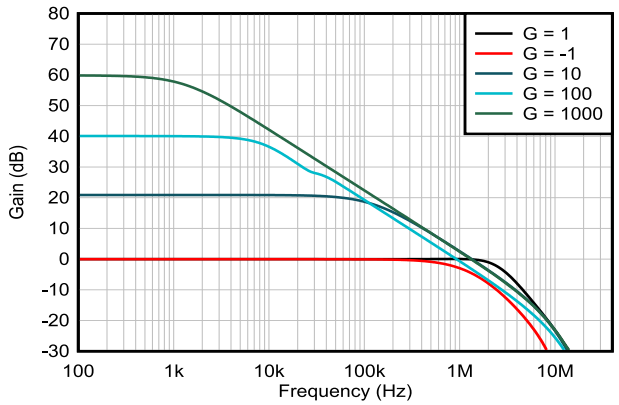

Figure 6-6. Closed-Loop Gain vs Frequency

Copyright © 2023 Texas Instruments Incorporated

6.8 Typical Characteristics (continued)

This typical characteristics section is applicable for LM2902B-Q1 and LM2902BA-Q1. Typical characteristics data in this section was taken with T_A = 25°C, V_S = 36 V (±18 V), V_{CM} = V_S / 2, R_{LOAD} = 10 kΩ connected to V_S / 2 (unless otherwise noted).

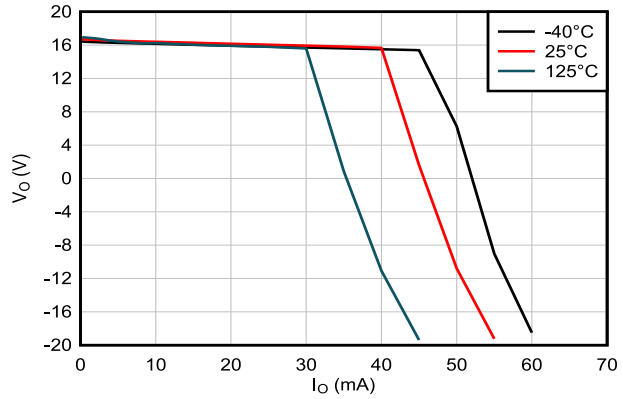

Figure 6-7. Output Voltage Swing vs Output Current (Sourcing)

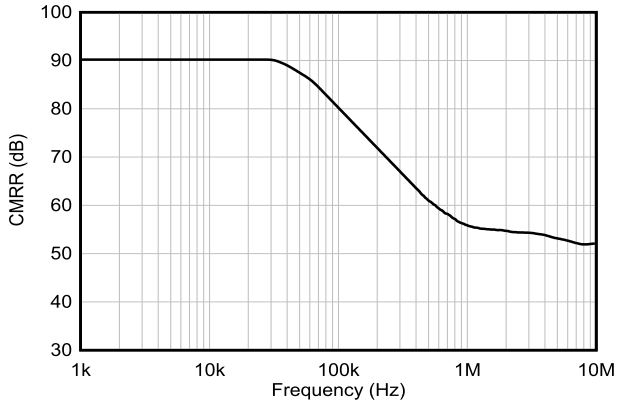

Figure 6-8. CMRR vs Frequency

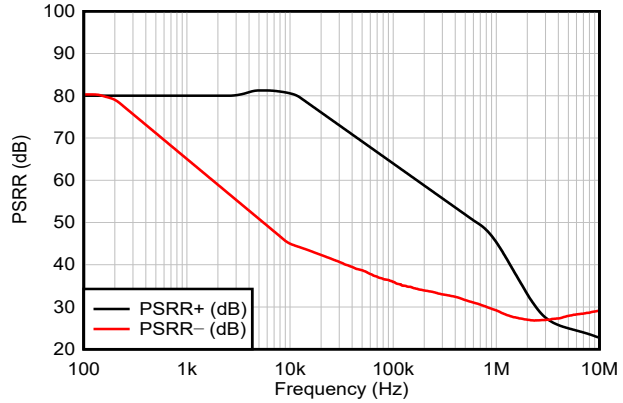

Figure 6-9. PSRR vs Frequency

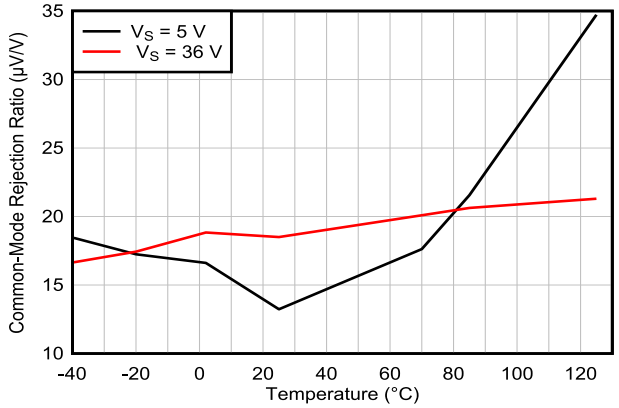

Figure 6-10. Common-Mode Rejection Ratio vs Temperature (dB)

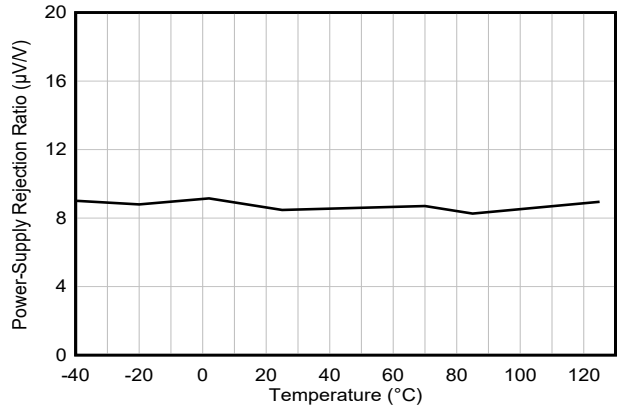

V_S = 5 V to 36 V

Figure 6-11. Power Supply Rejection Ratio vs Temperature (dB)

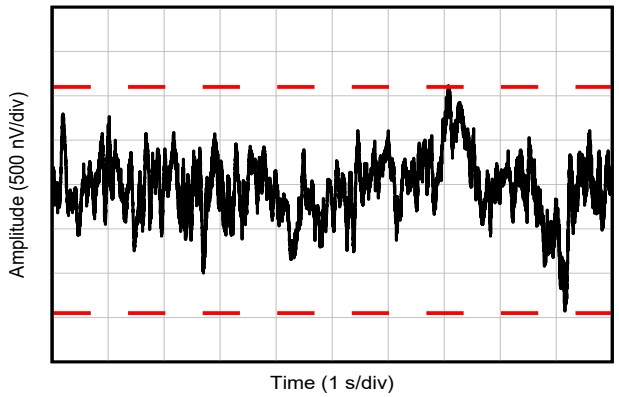

Figure 6-12. 0.1-Hz to 10-Hz Noise

6.8 Typical Characteristics (continued)

This typical characteristics section is applicable for LM2902B-Q1 and LM2902BA-Q1. Typical characteristics data in this section was taken with T_A = 25°C, V_S = 36 V (±18 V), V_{CM} = V_S / 2, R_{LOAD} = 10 kΩ connected to V_S / 2 (unless otherwise noted).

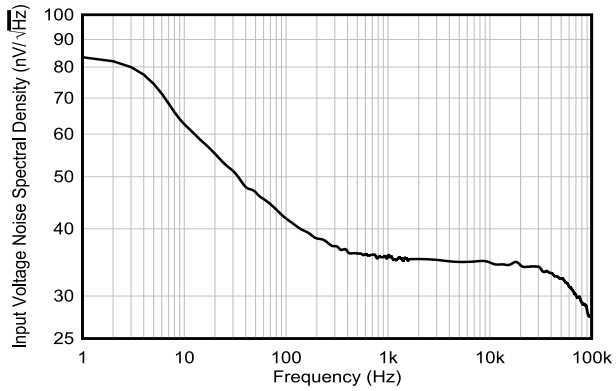

Figure 6-13. Input Voltage Noise Spectral Density vs Frequency

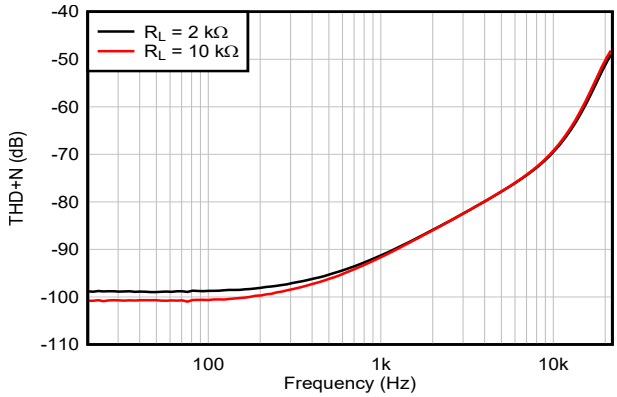

G = 1, f = 1 kHz, BW = 80 kHz,
V_{OUT} = 10 V_{PP}, R_L connected to V–

Figure 6-14. THD+N Ratio vs Frequency, G = 1

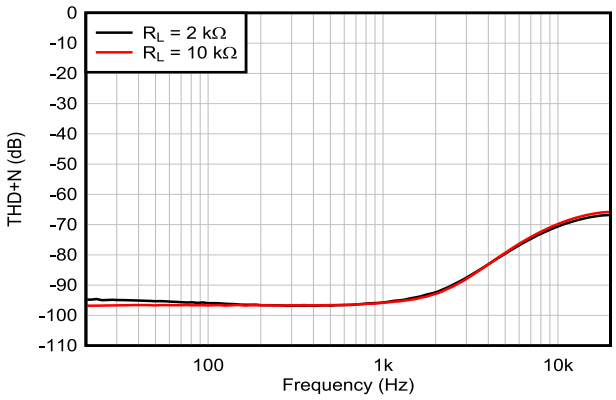

G = –1, f = 1 kHz, BW = 80 kHz,
V_{OUT} = 10 V_{PP}, R_L connected to V–
See Section 7

Figure 6-15. THD+N Ratio vs Frequency, G = –1

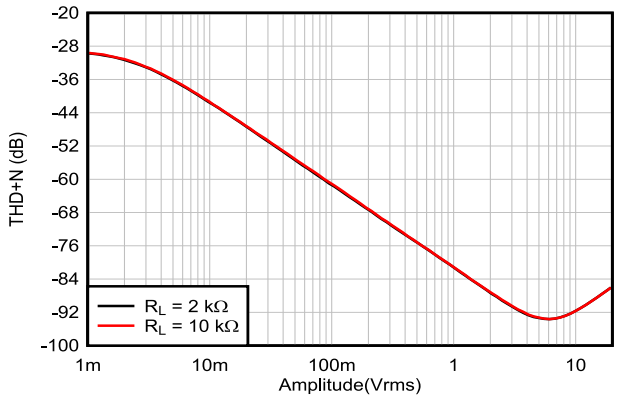

G = 1, f = 1 kHz, BW = 80 kHz,
R_L connected to V–

Figure 6-16. THD+N vs Output Amplitude, G = 1

Copyright © 2023 Texas Instruments Incorporated

6.8 Typical Characteristics (continued)

This typical characteristics section is applicable for LM2902B-Q1 and LM2902BA-Q1. Typical characteristics data in this section was taken with T_A = 25°C, V_S = 36 V (±18 V), V_{CM} = V_S / 2, R_{LOAD} = 10 kΩ connected to V_S / 2 (unless otherwise noted).

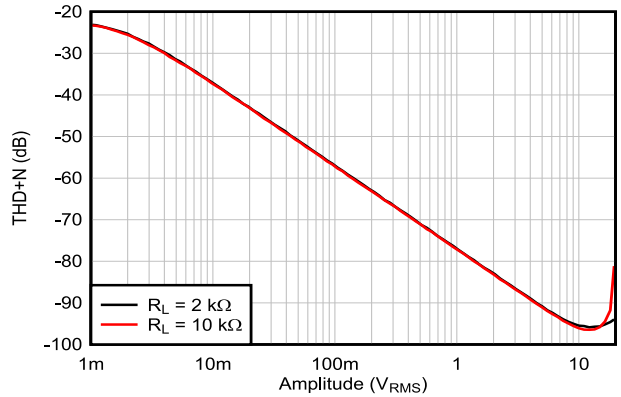

G = –1, f = 1 kHz, BW = 80 kHz,
R_L connected to V–
See Section 7

Figure 6-17. THD+N vs Output Amplitude, G = –1

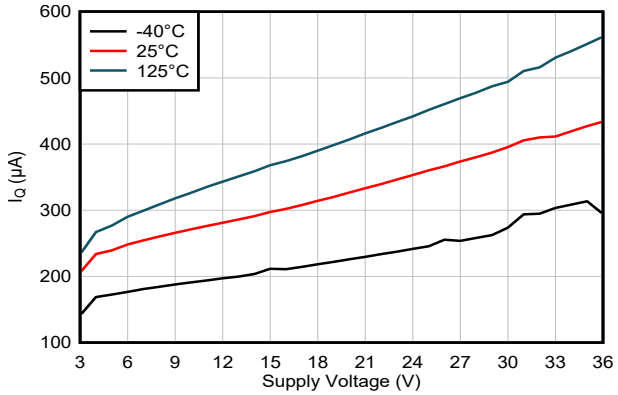

Figure 6-18. Quiescent Current vs Supply Voltage

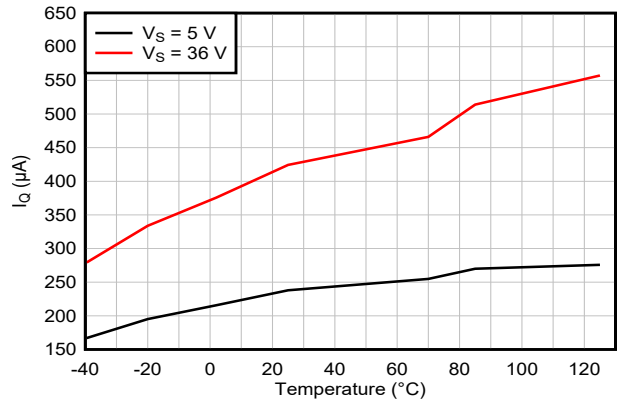

Figure 6-19. Quiescent Current vs Temperature

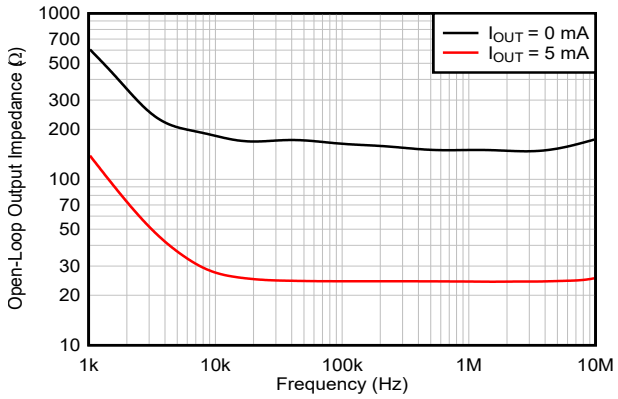

Figure 6-20. Open-Loop Output Impedance vs Frequency

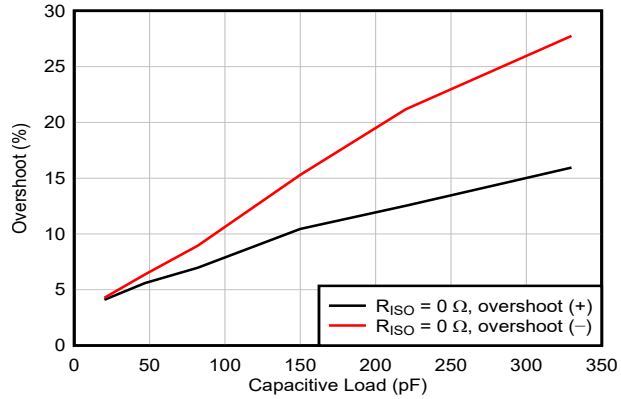

G = 1, 100-mV output step, R_L = open

Figure 6-21. Small-Signal Overshoot vs Capacitive Load

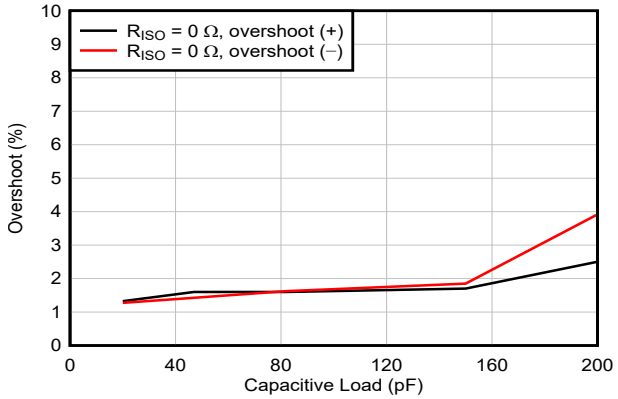

G = –1, 100-mV output step, R_L = open

Figure 6-22. Small-Signal Overshoot vs Capacitive Load

6.8 Typical Characteristics (continued)

This typical characteristics section is applicable for LM2902B-Q1 and LM2902BA-Q1. Typical characteristics data in this section was taken with T_A = 25°C, V_S = 36 V (±18 V), V_{CM} = V_S / 2, R_{LOAD} = 10 kΩ connected to V_S / 2 (unless otherwise noted).

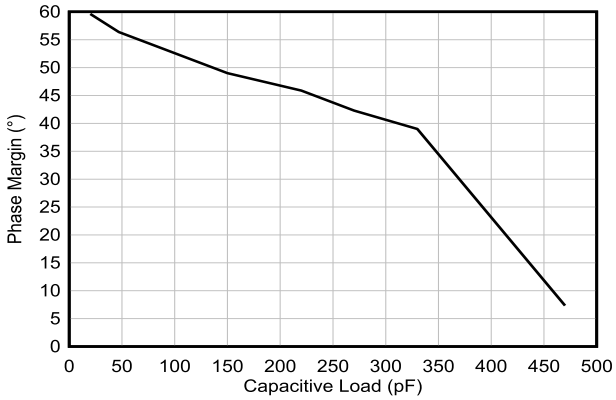

G = +1, R_L = 10 kΩ, C_L = 20 pF

Figure 6-23. Phase Margin vs Capacitive Load

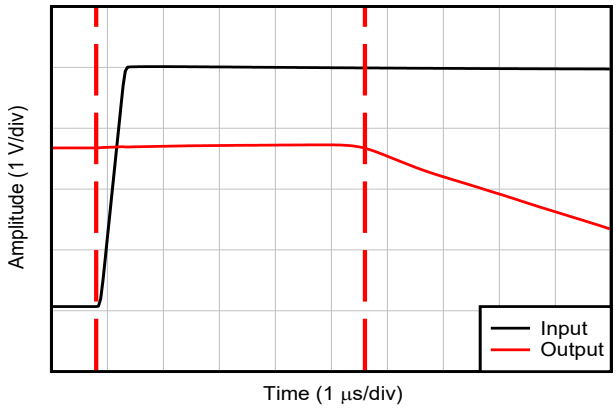

G = –10

Figure 6-24. Overload Recovery (Positive Rail)

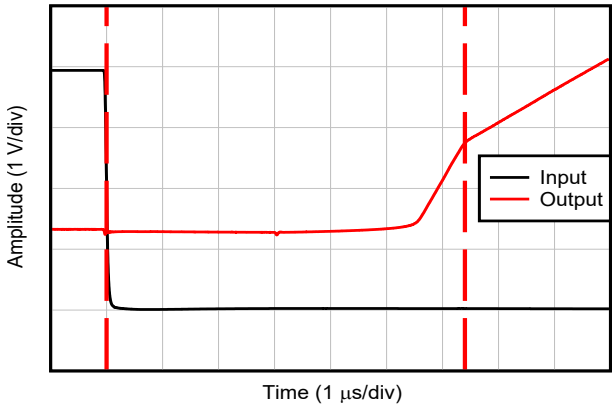

G = –10

Figure 6-25. Overload Recovery (Negative Rail)

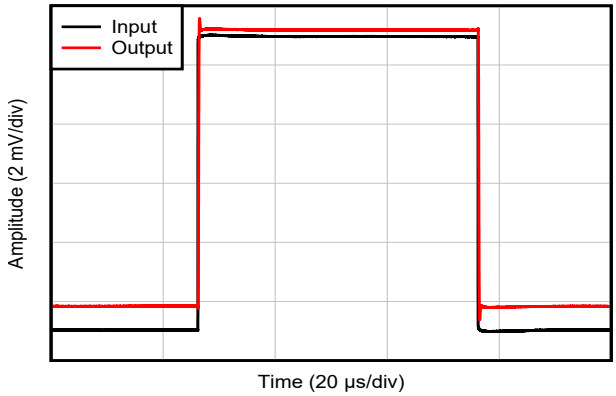

G = 1, R_L = open

Figure 6-26. Small-Signal Step Response, G = 1

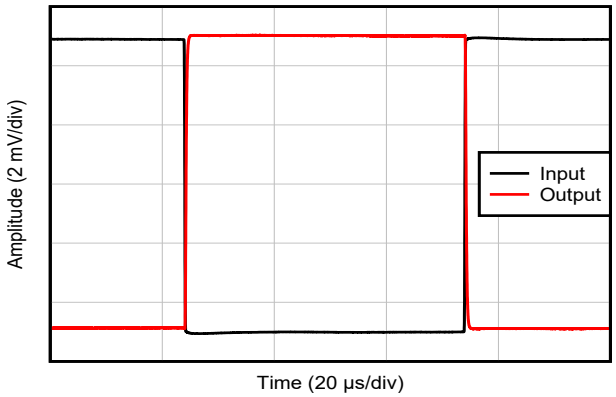

G = –1, R_L = open, R_{FB} = 10K

See Section 7

Figure 6-27. Small-Signal Step Response, G = –1

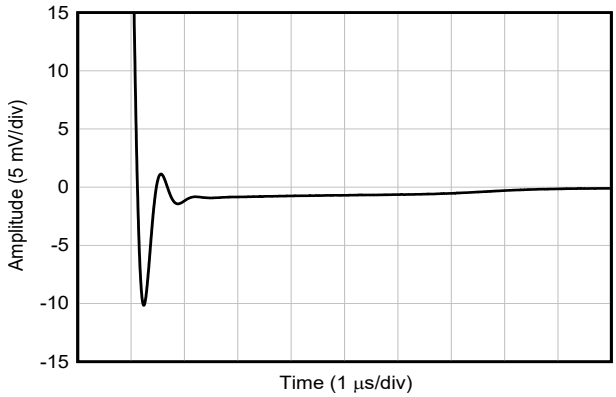

G = 1, R_L = open

Figure 6-28. Large-Signal Step Response (Falling)

Copyright © 2023 Texas Instruments Incorporated

6.8 Typical Characteristics (continued)

This typical characteristics section is applicable for LM2902B-Q1 and LM2902BA-Q1. Typical characteristics data in this section was taken with T_A = 25°C, V_S = 36 V (±18 V), V_{CM} = V_S / 2, R_{LOAD} = 10 kΩ connected to V_S / 2 (unless otherwise noted).

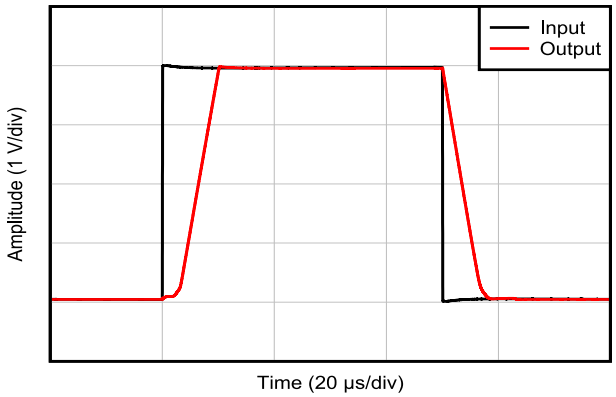

G = 1, R_L = open

Figure 6-29. Large-Signal Step Response, G = 1

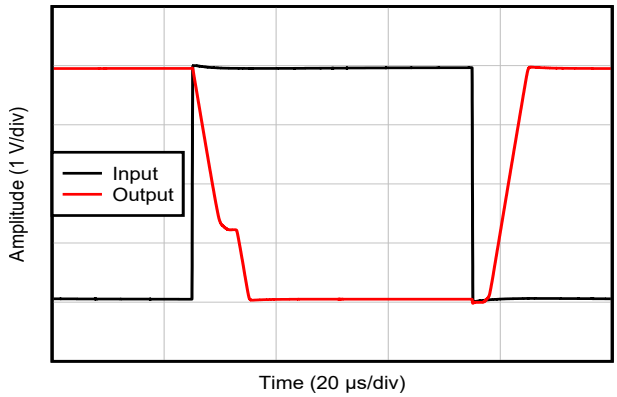

G = –1, R_L = open

Figure 6-30. Large-Signal Step Response, G = –1

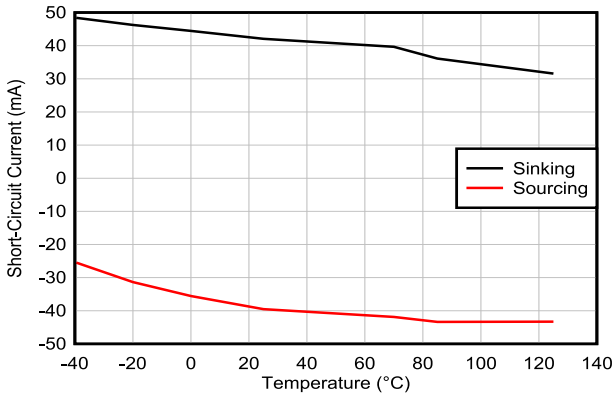

Figure 6-31. Short-Circuit Current vs Temperature

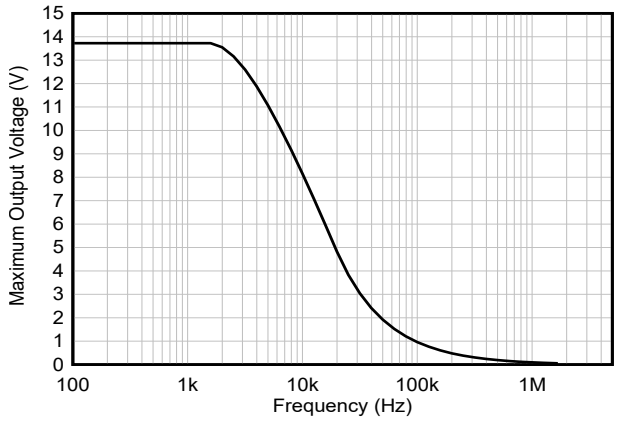

V_S = 15 V

Figure 6-32. Maximum Output Voltage vs Frequency

Figure 6-33. Channel Separation vs Frequency

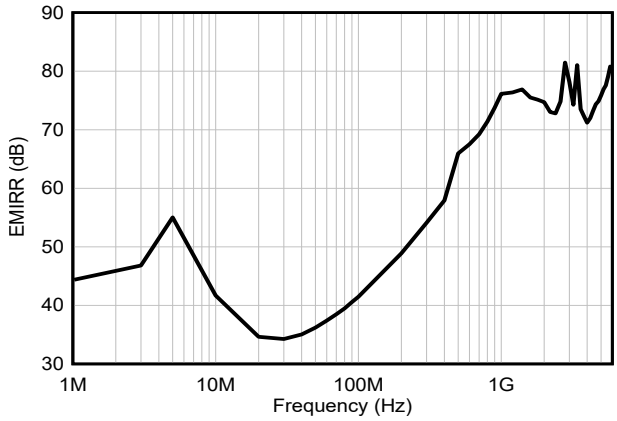

Figure 6-34. EMIRR (Electromagnetic Interference Rejection Ratio) vs Frequency

7 Parameter Measurement Information

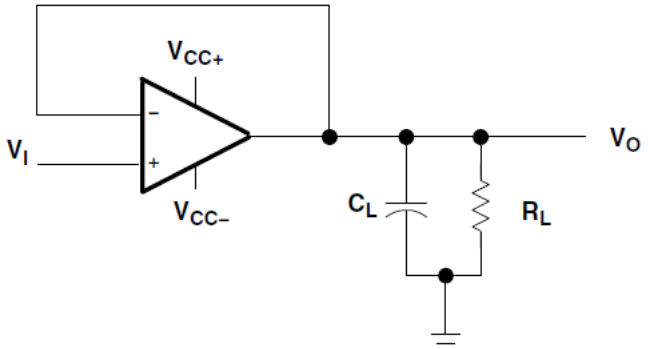

Figure 7-1. Unity-Gain Amplifier

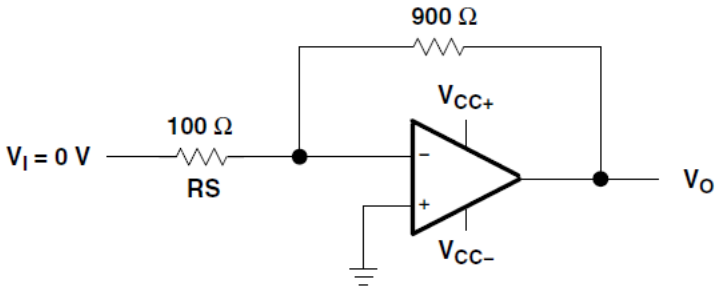

Figure 7-2. Noise-Test Circuit

Copyright © 2023 Texas Instruments Incorporated

8 Detailed Description

8.1 Overview

The LM2902-Q1, LM2902B-Q1, and LM2902BA-Q1 devices consist of four independent, high-gain frequency-compensated operational amplifiers designed to operate from a single supply over a wide range of voltages. Operation from split supplies also is possible if the difference between the two supplies is within the supply voltage range, and V_S is at least 1.5 V more positive than the input common-mode voltage. The low supply-current drain is independent of the magnitude of the supply voltage.

Applications include transducer amplifiers, DC amplification blocks, and all the conventional operational amplifier circuits that now can be implemented more easily in single-supply-voltage systems. For example, these devices can be operated directly from the standard 5-V supply used in digital systems and easily can provide the required interface electronics without additional ±5-V supplies.

8.2 Functional Block Diagram

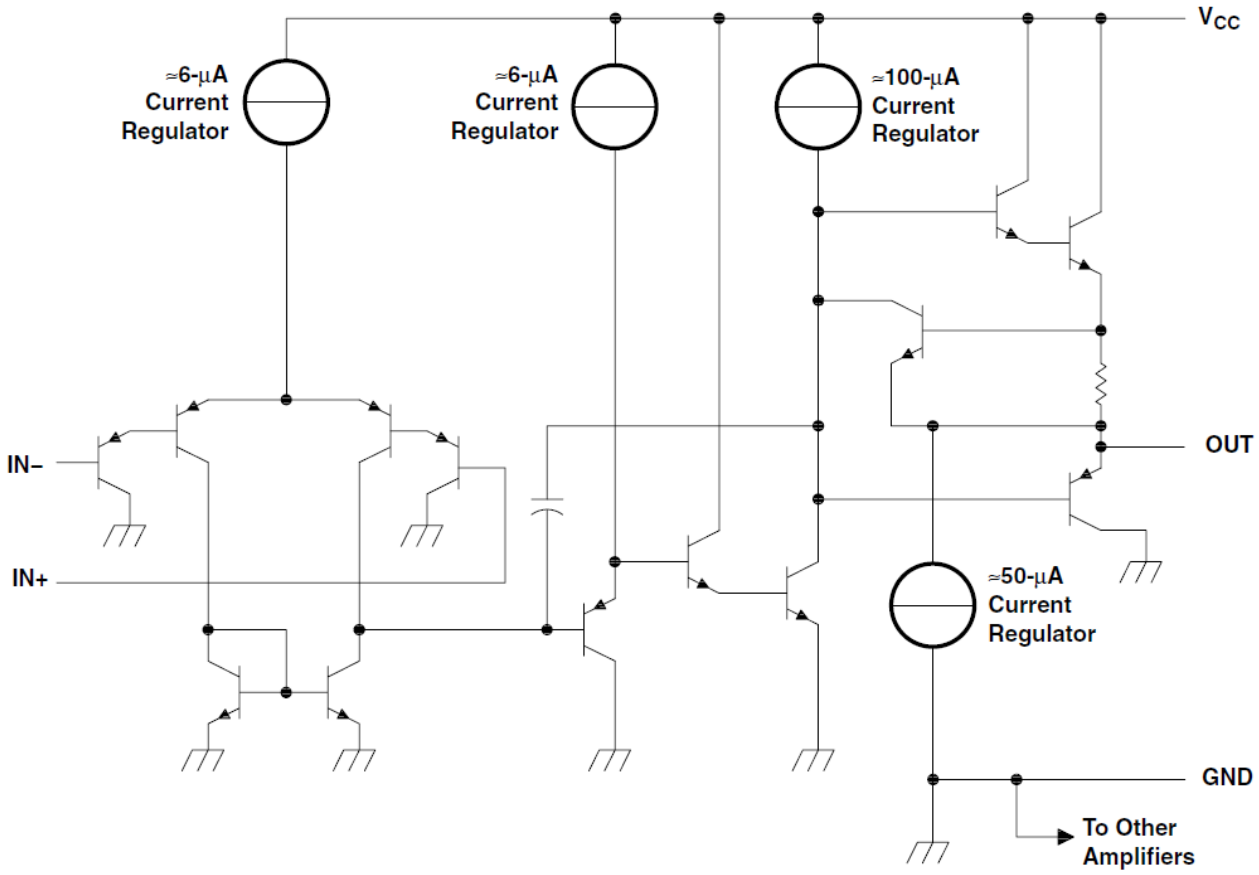

Schematic (Each Amplifier)

8.3 Feature Description

8.3.1 Input Common Mode Range

The valid common mode range is from device ground to V_S – 1.5 V (V_S – 2 V across temperature). Inputs may exceed V_S up to the maximum V_S without device damage. At least one input must be in the valid input common-mode range for the output to be the correct phase. If both inputs exceed the valid range, then the output phase is undefined. If either input more than 0.3 V below V– then input current should be limited to 1 mA and the output phase is undefined.

8.4 Device Functional Modes

The LM2902-Q1, LM2902B-Q1, and LM2902BA-Q1 devices are powered on when the supply is connected. This device can be operated as a single-supply operational amplifier or dual-supply amplifier, depending on the application.

Copyright © 2023 Texas Instruments Incorporated

9 Application and Implementation

Note

Information in the following applications sections is not part of the TI component specification, and TI does not warrant its accuracy or completeness. TI's customers are responsible for determining suitability of components for their purposes, as well as validating and testing their design implementation to confirm system functionality.

9.1 Application Information

The LM2902-Q1, LM2902B-Q1, LM2902BA-Q1 operational amplifiers are useful in a wide range of signal conditioning applications. Inputs can be powered before V_S for flexibility in multiple supply circuits. For full application design guidelines related to this family of devices, please refer to the application report *Application design guidelines for LM324/LM358 devices*.

9.2 Typical Application

A typical application for an operational amplifier is an inverting amplifier. This amplifier takes a positive voltage on the input, and makes it a negative voltage of the same magnitude. In the same manner, it also makes negative voltages positive.

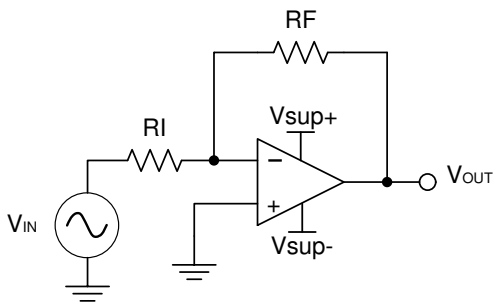

Figure 9-1. Application Schematic

9.2.1 Design Requirements

The supply voltage must be chosen such that it is larger than the input voltage range and output range. For instance, this application scales a signal of ±0.5 V to ±1.8 V. Setting the supply at ±12 V is sufficient to accommodate this application.

9.2.2 Detailed Design Procedure

Determine the gain required by the inverting amplifier using Equation 1 and Equation 2:

$$A_V = \frac{VOUT}{VIN} \tag{1}$$

$$A_V = \frac{1.8}{-0.5} = -3.6 \tag{2}$$

Once the desired gain is determined, choose a value for R_I or R_F. Choosing a value in the kilohm range is desirable because the amplifier circuit uses currents in the milliampere range. This allows the part to not draw too much current. This example uses 10 kΩ for R_I which means 36 kΩ is used for R_F. This was determined by Equation 3.

$$A_V = -\frac{RF}{RI} \tag{3}$$

9.2.3 Application Curve

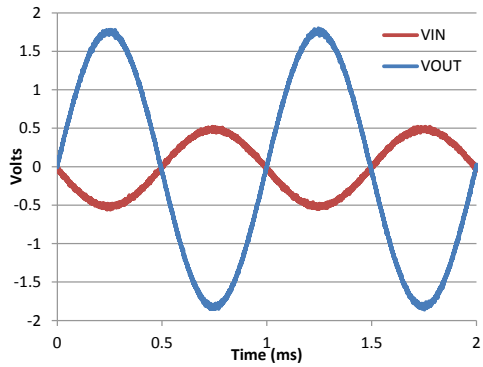

Figure 9-2. Input and Output Voltages of the Inverting Amplifier

9.3 Power Supply Recommendations

CAUTION

Supply voltages larger than specified in the recommended operating region can permanently damage the device (see Section 6.1).

Place 0.1-µF bypass capacitors close to the power-supply pins to reduce errors coupling in from noisy or high-impedance power supplies. For more detailed information on bypass capacitor placement, see Section 9.4.

9.4 Layout

9.4.1 Layout Guidelines

For best operational performance of the device, use good PCB layout practices, including:

- Noise can propagate into analog circuitry through the power pins of the circuit as a whole, as well as the operational amplifier. Bypass capacitors are used to reduce the coupled noise by providing low-impedance power sources local to the analog circuitry.
  - Connect low-ESR, 0.1-µF ceramic bypass capacitors between each supply pin and ground, placed as close to the device as possible. A single bypass capacitor from V+ to ground is applicable for single-supply applications.
- Separate grounding for analog and digital portions of circuitry is one of the simplest and most-effective methods of noise suppression. One or more layers on multilayer PCBs are usually devoted to ground planes. A ground plane helps distribute heat and reduces EMI noise pickup. Make sure to physically separate digital and analog grounds, paying attention to the flow of the ground current.
- To reduce parasitic coupling, run the input traces as far away from the supply or output traces as possible. If it is not possible to keep them separate, it is much better to cross the sensitive trace perpendicular as opposed to in parallel with the noisy trace.
- Place the external components as close to the device as possible. Keeping R_F and R_G close to the inverting input minimizes parasitic capacitance, as shown in Figure 9-3.
- Keep the length of input traces as short as possible. Always remember that the input traces are the most sensitive part of the circuit.
- Consider a driven, low-impedance guard ring around the critical traces. A guard ring can significantly reduce leakage currents from nearby traces that are at different potentials.

Copyright © 2023 Texas Instruments Incorporated

9.4.2 Layout Example

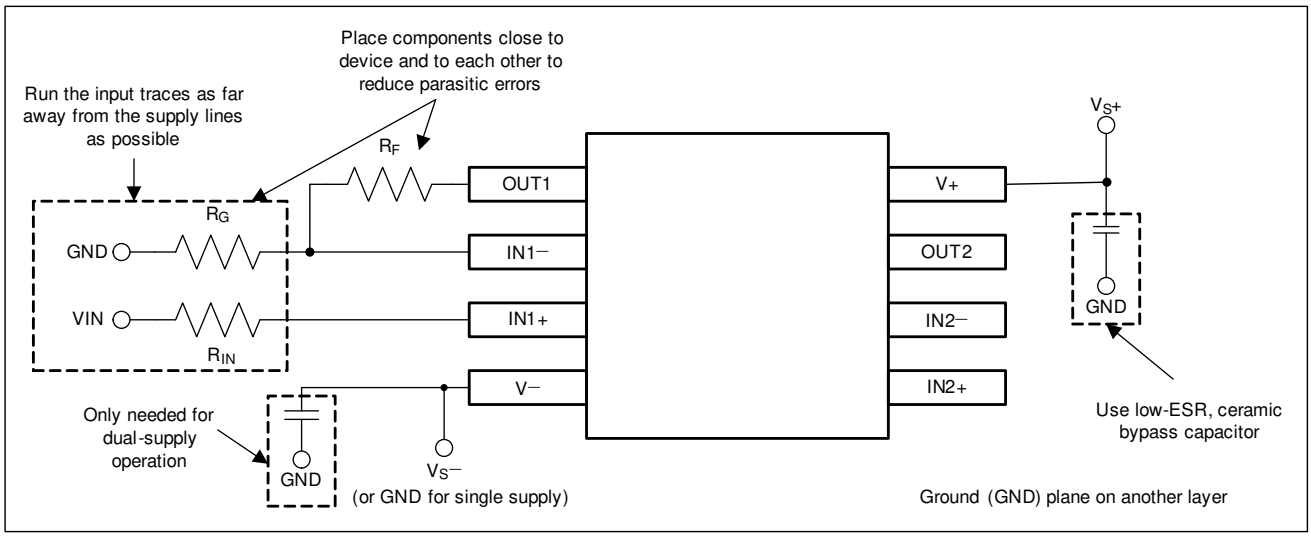

Figure 9-3. Operational Amplifier Board Layout for Noninverting Configuration

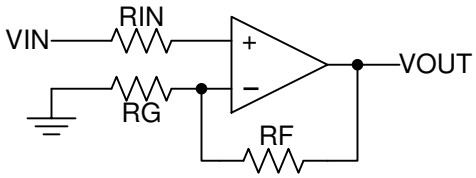

Figure 9-4. Operational Amplifier Schematic for Noninverting Configuration

10 Device and Documentation Support

10.1 Documentation Support

10.1.1 Related Documentation

For related documentation, see the following:

- Texas Instruments, *Application Design Guidelines for LM324/LM358 Devices* application note

10.2 Receiving Notification of Documentation Updates

To receive notification of documentation updates, navigate to the device product folder on ti.com. Click on *Subscribe to updates* to register and receive a weekly digest of any product information that has changed. For change details, review the revision history included in any revised document.

10.3 Support Resources

TI E2E™ support forums are an engineer's go-to source for fast, verified answers and design help — straight from the experts. Search existing answers or ask your own question to get the quick design help you need.

Linked content is provided "AS IS" by the respective contributors. They do not constitute TI specifications and do not necessarily reflect TI's views; see TI's Terms of Use.

10.4 Trademarks

TI E2E™ is a trademark of Texas Instruments.
All trademarks are the property of their respective owners.

10.5 Electrostatic Discharge Caution

This integrated circuit can be damaged by ESD. Texas Instruments recommends that all integrated circuits be handled with appropriate precautions. Failure to observe proper handling and installation procedures can cause damage.

ESD damage can range from subtle performance degradation to complete device failure. Precision integrated circuits may be more susceptible to damage because very small parametric changes could cause the device not to meet its published specifications.

10.6 Glossary

TI Glossary	This glossary lists and explains terms, acronyms, and definitions.

11 Mechanical, Packaging, and Orderable Information

The following pages include mechanical, packaging, and orderable information. This information is the most current data available for the designated devices. This data is subject to change without notice and revision of this document. For browser-based versions of this data sheet, refer to the left-hand navigation.

Copyright © 2023 Texas Instruments Incorporated

PACKAGING INFORMATION

Orderable Device	Status (1)	Package Type	Package Drawing	Pins	Package Qty	Eco Plan (2)	Lead finish/ Ball material (6)	MSL Peak Temp (3)	Op Temp (°C)	Device Marking (4/5)	Samples
LM2902BAQPWRQ1	ACTIVE	TSSOP	PW	14	3000	RoHS & Green	NIPDAU	Level-1-260C-UNLIM	-40 to 125	2902BAQ	Samples
LM2902BQPWRQ1	ACTIVE	TSSOP	PW	14	3000	RoHS & Green	NIPDAU	Level-1-260C-UNLIM	-40 to 125	L2902BQ	Samples
LM2902KAVQDRQ1	ACTIVE	SOIC	D	14	2500	RoHS & Green	NIPDAU	Level-1-260C-UNLIM	-40 to 125	2902KAQ	Samples
LM2902KAVQPWRG4Q1	OBSOLETE	TSSOP	PW	14		TBD	Call TI	Call TI	-40 to 125	2902KAQ	
LM2902KAVQPWRQ1	ACTIVE	TSSOP	PW	14	2000	RoHS & Green	NIPDAU	Level-1-260C-UNLIM	-40 to 125	2902KAQ	Samples
LM2902KVQDRQ1	ACTIVE	SOIC	D	14	2500	RoHS & Green	NIPDAU	Level-1-260C-UNLIM	-40 to 125	2902KVQ	Samples
LM2902KVQPWRG4Q1	OBSOLETE	TSSOP	PW	14		TBD	Call TI	Call TI	-40 to 125	2902KVQ	
LM2902KVQPWRQ1	ACTIVE	TSSOP	PW	14	2000	RoHS & Green	NIPDAU	Level-1-260C-UNLIM	-40 to 125	2902KVQ	Samples
LM2902QDRG4Q1	OBSOLETE	SOIC	D	14		TBD	Call TI	Call TI	-40 to 125	2902Q1	
LM2902QDRQ1	ACTIVE	SOIC	D	14	2500	RoHS & Green	NIPDAU	Level-1-260C-UNLIM	-40 to 125	2902Q1	Samples
LM2902QPWRG4Q1	OBSOLETE	TSSOP	PW	14		TBD	Call TI	Call TI	-40 to 125	2902Q1	
LM2902QPWRQ1	ACTIVE	TSSOP	PW	14	2000	RoHS & Green	NIPDAU	Level-1-260C-UNLIM	-40 to 125	2902Q1	Samples
PLM2902BQDRQ1	ACTIVE	SOIC	D	14	3000	TBD	Call TI	Call TI			Samples

(1) The marketing status values are defined as follows:
ACTIVE: Product device recommended for new designs.
LIFEBUY: TI has announced that the device will be discontinued, and a lifetime-buy period is in effect.
NRND: Not recommended for new designs. Device is in production to support existing customers, but TI does not recommend using this part in a new design.
PREVIEW: Device has been announced but is not in production. Samples may or may not be available.
OBSOLETE: TI has discontinued the production of the device.

(2) **RoHS:** TI defines "RoHS" to mean semiconductor products that are compliant with the current EU RoHS requirements for all 10 RoHS substances, including the requirement that RoHS substance do not exceed 0.1% by weight in homogeneous materials. Where designed to be soldered at high temperatures, "RoHS" products are suitable for use in specified lead-free processes. TI may reference these types of products as "Pb-Free".
RoHS Exempt: TI defines "RoHS Exempt" to mean products that contain lead but are compliant with EU RoHS pursuant to a specific EU RoHS exemption.
Green: TI defines "Green" to mean the content of Chlorine (Cl) and Bromine (Br) based flame retardants meet JS709B low halogen requirements of <=1000ppm threshold. Antimony trioxide based flame retardants must also meet the <=1000ppm threshold requirement.

(3) MSL, Peak Temp. - The Moisture Sensitivity Level rating according to the JEDEC industry standard classifications, and peak solder temperature.

(4) There may be additional marking, which relates to the logo, the lot trace code information, or the environmental category on the device.

(5) Multiple Device Markings will be inside parentheses. Only one Device Marking contained in parentheses and separated by a "~" will appear on a device. If a line is indented then it is a continuation of the previous line and the two combined represent the entire Device Marking for that device.

(6) Lead finish/Ball material - Orderable Devices may have multiple material finish options. Finish options are separated by a vertical ruled line. Lead finish/Ball material values may wrap to two lines if the finish value exceeds the maximum column width.

Important Information and Disclaimer: The information provided on this page represents TI's knowledge and belief as of the date that it is provided. TI bases its knowledge and belief on information provided by third parties, and makes no representation or warranty as to the accuracy of such information. Efforts are underway to better integrate information from third parties. TI has taken and continues to take reasonable steps to provide representative and accurate information but may not have conducted destructive testing or chemical analysis on incoming materials and chemicals. TI and TI suppliers consider certain information to be proprietary, and thus CAS numbers and other limited information may not be available for release.

In no event shall TI's liability arising out of such information exceed the total purchase price of the TI part(s) at issue in this document sold by TI to Customer on an annual basis.

OTHER QUALIFIED VERSIONS OF LM2902-Q1, LM2902B-Q1, LM2902BA-Q1 :

- Catalog : LM2902, LM2902B, LM2902BA
- Enhanced Product : LM2902-EP

NOTE: Qualified Version Definitions:

- Catalog - TI's standard catalog product
- Enhanced Product - Supports Defense, Aerospace and Medical Applications

TAPE AND REEL INFORMATION

REEL DIMENSIONS

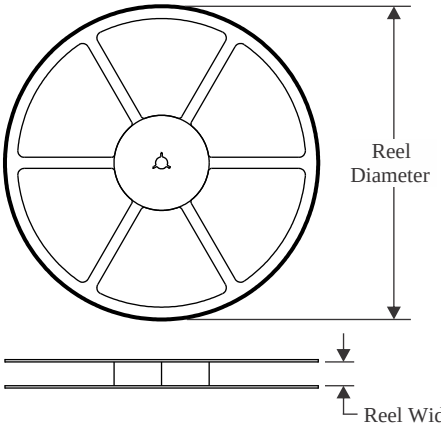

TAPE DIMENSIONS

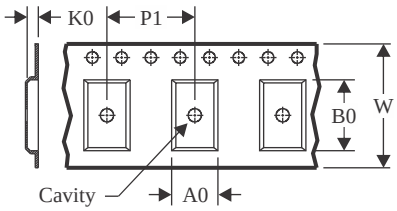

A0	Dimension designed to accommodate the component width
B0	Dimension designed to accommodate the component length
K0	Dimension designed to accommodate the component thickness
W	Overall width of the carrier tape
P1	Pitch between successive cavity centers

QUADRANT ASSIGNMENTS FOR PIN 1 ORIENTATION IN TAPE

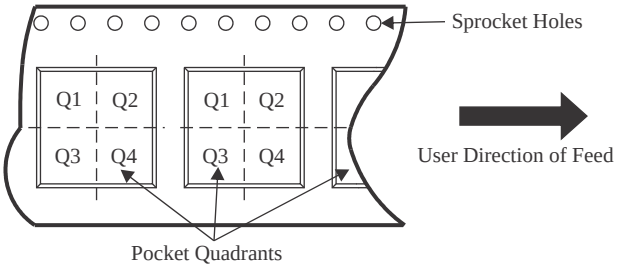

*All dimensions are nominal

Device	Package Type	Package Drawing	Pins	SPQ	Reel Diameter (mm)	Reel Width W1 (mm)	A0 (mm)	B0 (mm)	K0 (mm)	P1 (mm)	W (mm)	Pin1 Quadrant
LM2902BAQPWRQ1	TSSOP	PW	14	3000	330.0	12.4	6.9	5.6	1.6	8.0	12.0	Q1
LM2902BQPWRQ1	TSSOP	PW	14	3000	330.0	12.4	6.9	5.6	1.6	8.0	12.0	Q1
LM2902KAVQPWRQ1	TSSOP	PW	14	2000	330.0	12.4	6.9	5.6	1.6	8.0	12.0	Q1
LM2902KVQPWRQ1	TSSOP	PW	14	2000	330.0	12.4	6.9	5.6	1.6	8.0	12.0	Q1
LM2902QPWRQ1	TSSOP	PW	14	2000	330.0	12.4	6.9	5.6	1.6	8.0	12.0	Q1

TAPE AND REEL BOX DIMENSIONS

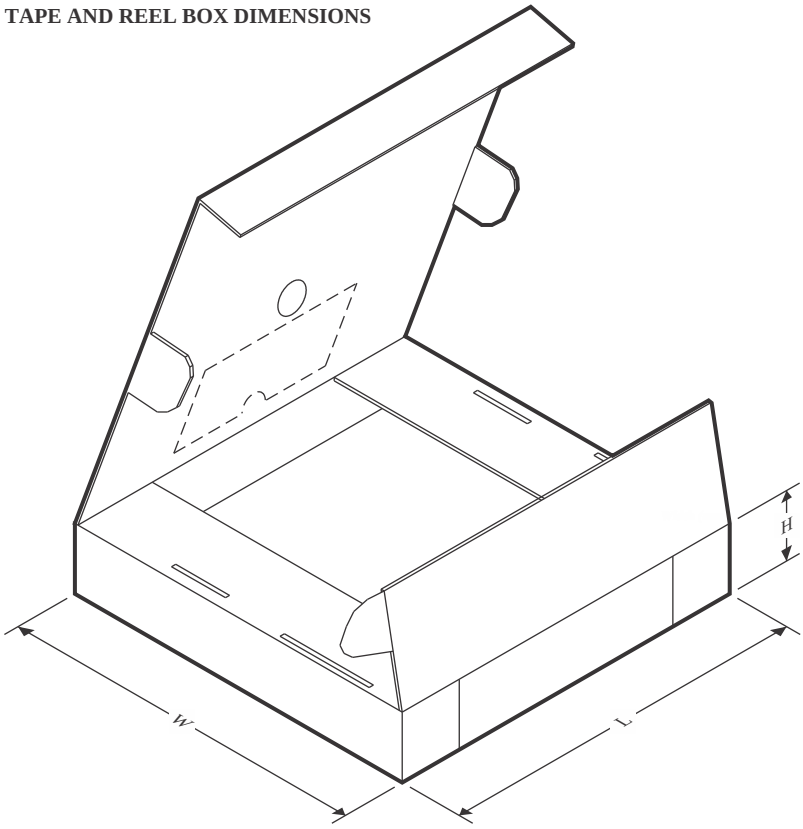

*All dimensions are nominal

Device	Package Type	Package Drawing	Pins	SPQ	Length (mm)	Width (mm)	Height (mm)
LM2902BAQPWRQ1	TSSOP	PW	14	3000	356.0	356.0	35.0
LM2902BQPWRQ1	TSSOP	PW	14	3000	356.0	356.0	35.0
LM2902KAVQPWRQ1	TSSOP	PW	14	2000	367.0	367.0	35.0
LM2902KVQPWRQ1	TSSOP	PW	14	2000	356.0	356.0	35.0
LM2902QPWRQ1	TSSOP	PW	14	2000	356.0	356.0	35.0

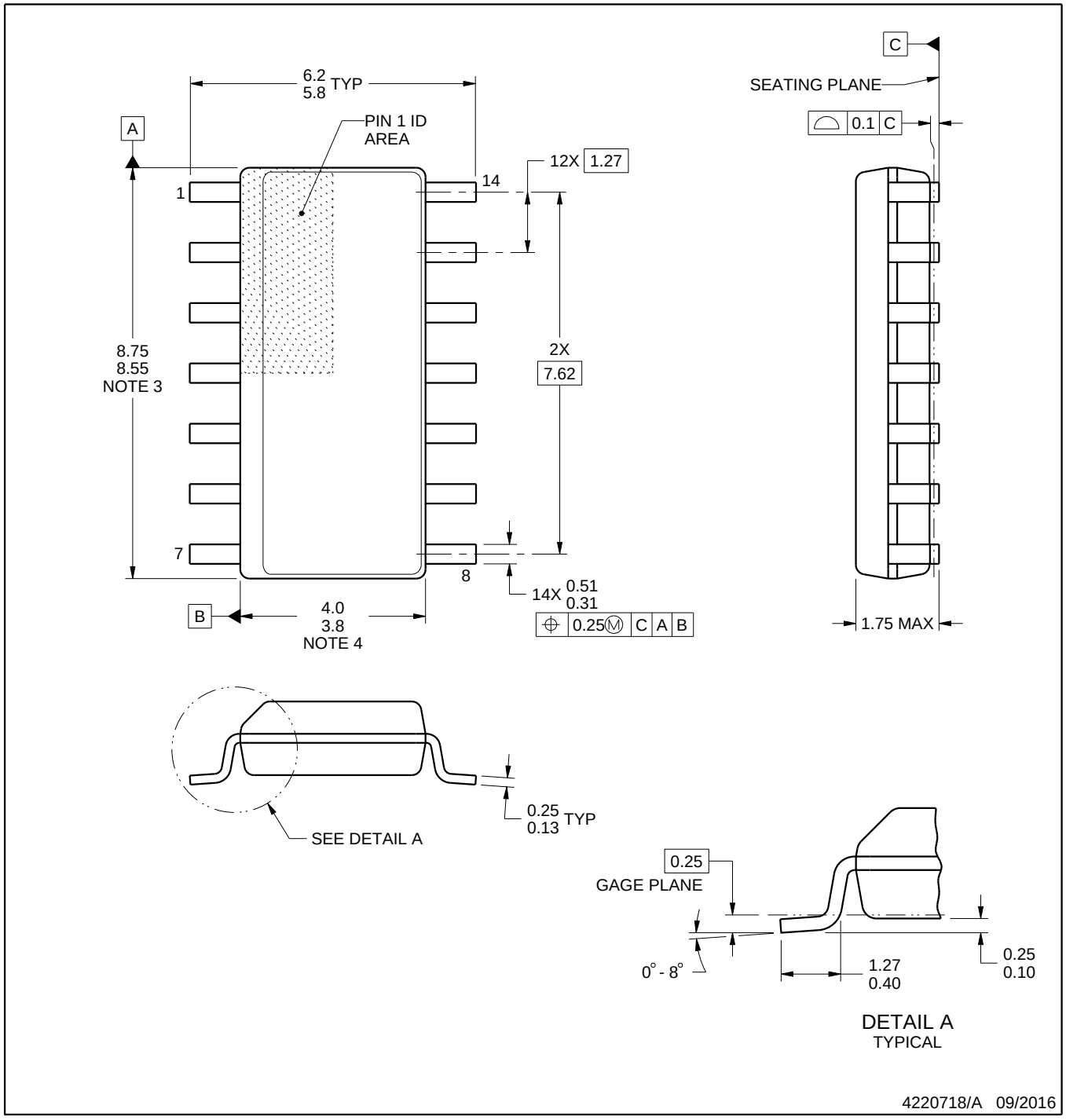

NOTES:

1. All linear dimensions are in millimeters. Dimensions in parenthesis are for reference only. Dimensioning and tolerancing per ASME Y14.5M.
2. This drawing is subject to change without notice.
3. This dimension does not include mold flash, protrusions, or gate burrs. Mold flash, protrusions, or gate burrs shall not exceed 0.15 mm, per side.
4. This dimension does not include interlead flash. Interlead flash shall not exceed 0.43 mm, per side.
5. Reference JEDEC registration MS-012, variation AB.

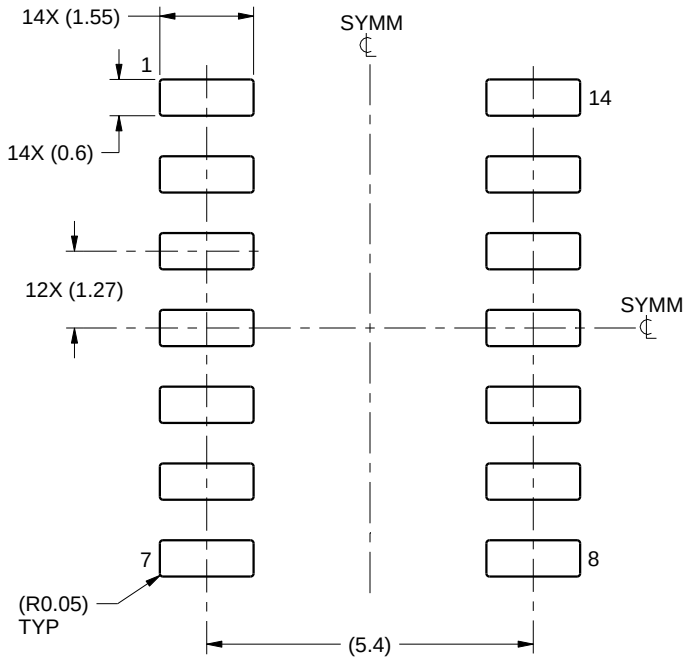

LAND PATTERN EXAMPLE
SCALE:8X

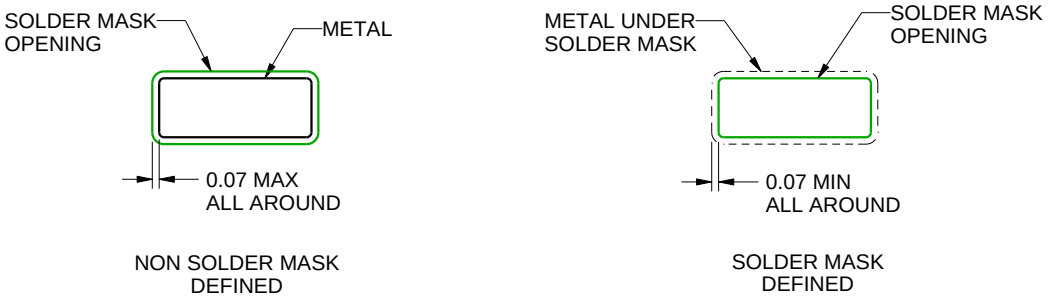

SOLDER MASK DETAILS

4220718/A 09/2016

NOTES: (continued)

6. Publication IPC-7351 may have alternate designs.
7. Solder mask tolerances between and around signal pads can vary based on board fabrication site.

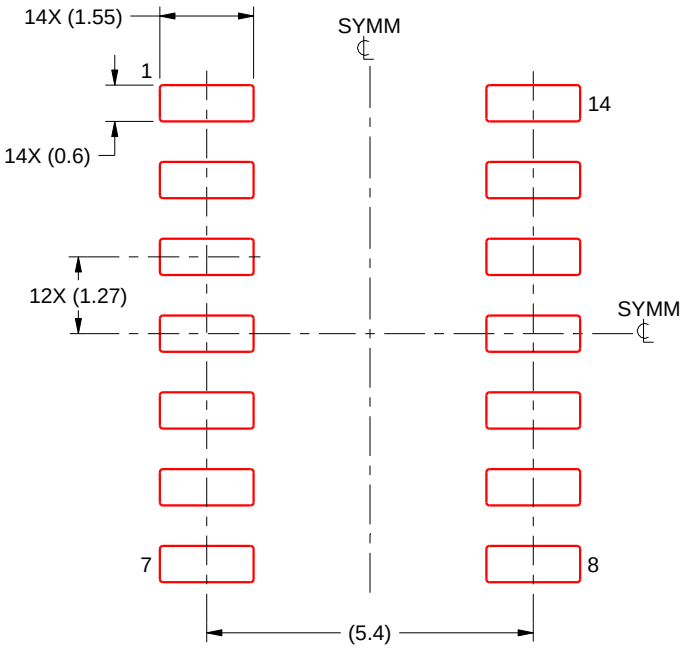

SOLDER PASTE EXAMPLE
BASED ON 0.125 mm THICK STENCIL
SCALE:8X

4220718/A 09/2016

NOTES: (continued)

8. Laser cutting apertures with trapezoidal walls and rounded corners may offer better paste release. IPC-7525 may have alternate design recommendations.
9. Board assembly site may have different recommendations for stencil design.

PW0014A

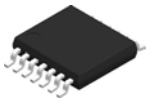

PACKAGE OUTLINE

TSSOP - 1.2 mm max height

SMALL OUTLINE PACKAGE

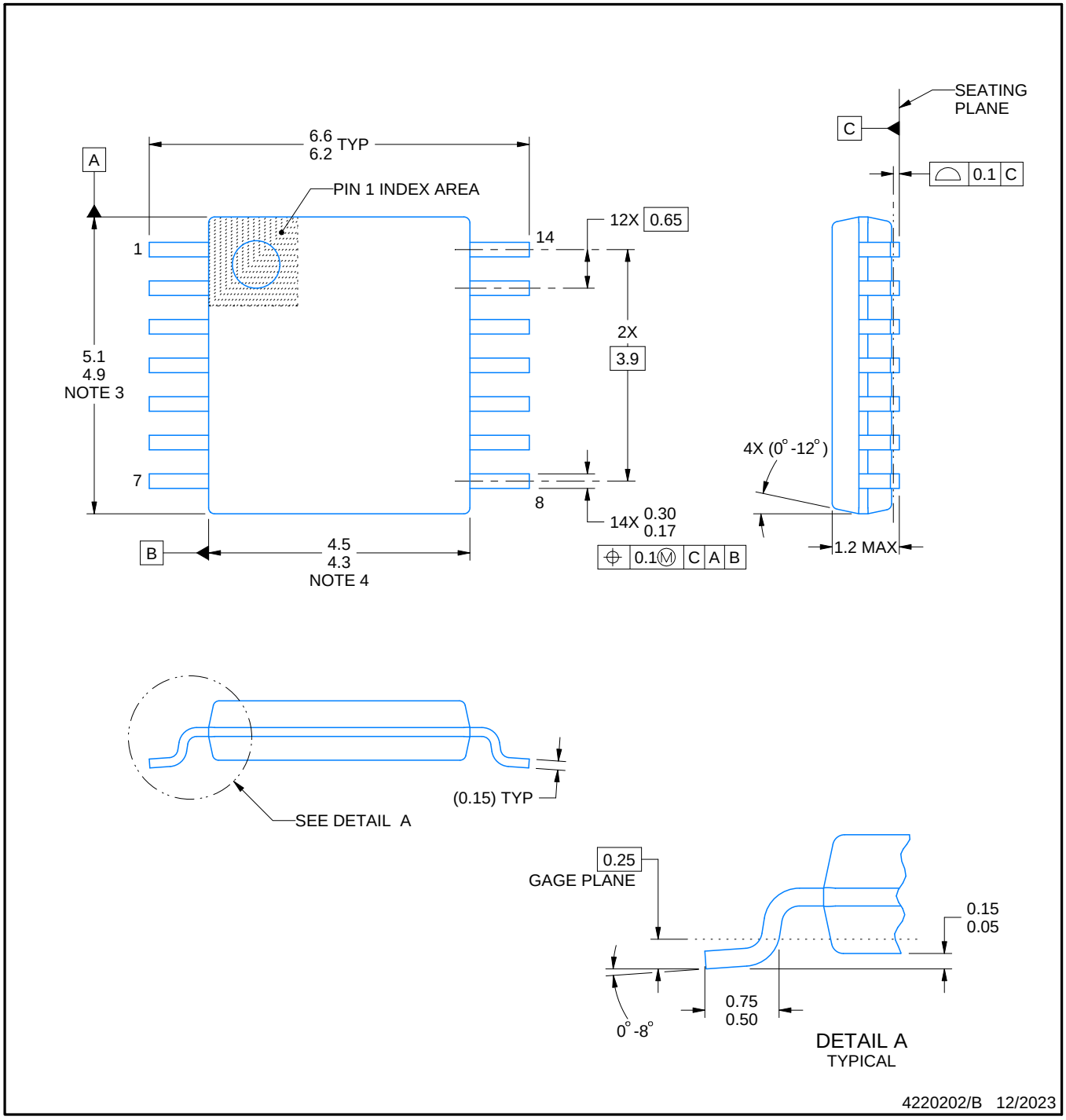

NOTES:

1. All linear dimensions are in millimeters. Any dimensions in parenthesis are for reference only. Dimensioning and tolerancing per ASME Y14.5M.
2. This drawing is subject to change without notice.
3. This dimension does not include mold flash, protrusions, or gate burrs. Mold flash, protrusions, or gate burrs shall not exceed 0.15 mm per side.
4. This dimension does not include interlead flash. Interlead flash shall not exceed 0.25 mm per side.
5. Reference JEDEC registration MO-153.

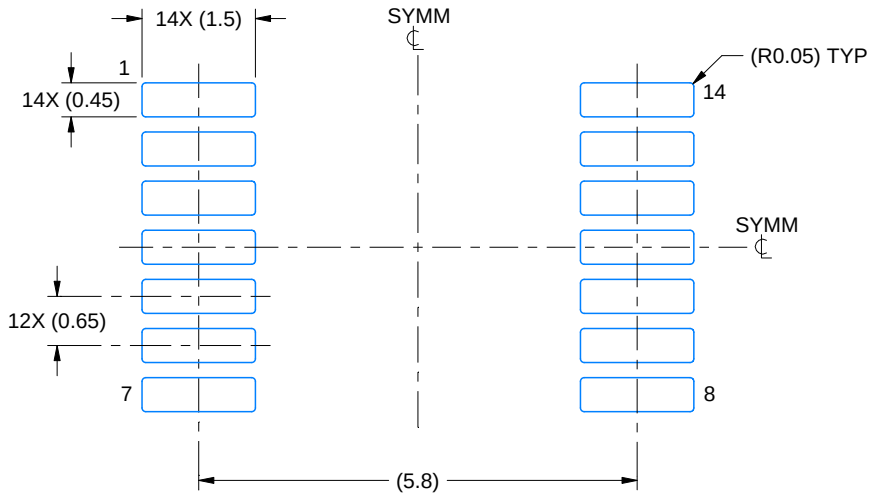

LAND PATTERN EXAMPLE
EXPOSED METAL SHOWN
SCALE: 10X

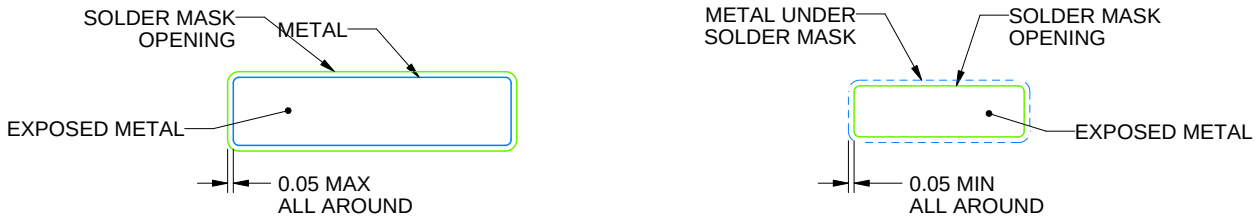

NON-SOLDER MASK DEFINED (PREFERRED)

SOLDER MASK DEFINED

SOLDER MASK DETAILS

4220202/B 12/2023

NOTES: (continued)

6. Publication IPC-7351 may have alternate designs.
7. Solder mask tolerances between and around signal pads can vary based on board fabrication site.

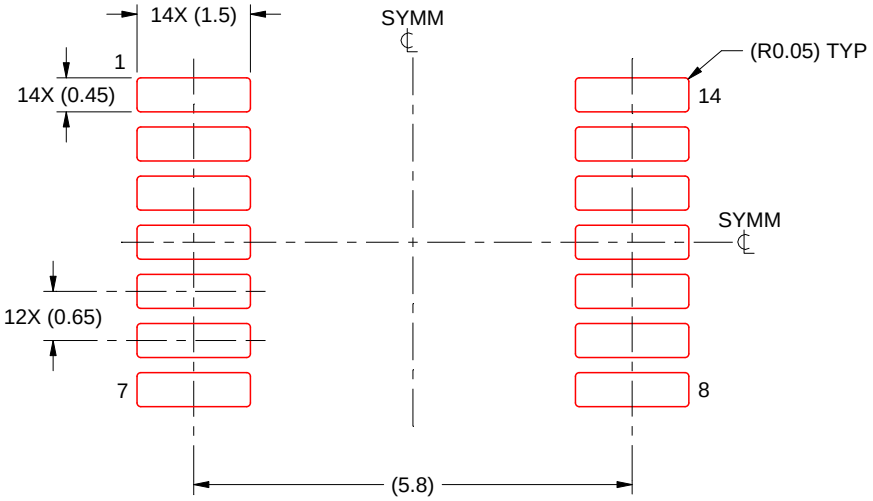

SOLDER PASTE EXAMPLE
BASED ON 0.125 mm THICK STENCIL
SCALE: 10X

4220202/B 12/2023

NOTES: (continued)

8. Laser cutting apertures with trapezoidal walls and rounded corners may offer better paste release. IPC-7525 may have alternate design recommendations.
9. Board assembly site may have different recommendations for stencil design.

IMPORTANT NOTICE AND DISCLAIMER

TI PROVIDES TECHNICAL AND RELIABILITY DATA (INCLUDING DATA SHEETS), DESIGN RESOURCES (INCLUDING REFERENCE DESIGNS), APPLICATION OR OTHER DESIGN ADVICE, WEB TOOLS, SAFETY INFORMATION, AND OTHER RESOURCES “AS IS” AND WITH ALL FAULTS, AND DISCLAIMS ALL WARRANTIES, EXPRESS AND IMPLIED, INCLUDING WITHOUT LIMITATION ANY IMPLIED WARRANTIES OF MERCHANTABILITY, FITNESS FOR A PARTICULAR PURPOSE OR NON-INFRINGEMENT OF THIRD PARTY INTELLECTUAL PROPERTY RIGHTS.

These resources are intended for skilled developers designing with TI products. You are solely responsible for (1) selecting the appropriate TI products for your application, (2) designing, validating and testing your application, and (3) ensuring your application meets applicable standards, and any other safety, security, regulatory or other requirements.

These resources are subject to change without notice. TI grants you permission to use these resources only for development of an application that uses the TI products described in the resource. Other reproduction and display of these resources is prohibited. No license is granted to any other TI intellectual property right or to any third party intellectual property right. TI disclaims responsibility for, and you will fully indemnify TI and its representatives against, any claims, damages, costs, losses, and liabilities arising out of your use of these resources.

TI’s products are provided subject to TI’s Terms of Sale or other applicable terms available either on ti.com or provided in conjunction with such TI products. TI’s provision of these resources does not expand or otherwise alter TI’s applicable warranties or warranty disclaimers for TI products.

TI objects to and rejects any additional or different terms you may have proposed.

Mailing Address: Texas Instruments, Post Office Box 655303, Dallas, Texas 75265
Copyright © 2024, Texas Instruments Incorporated