TLV170x-Q1 2.2-V to 36-V, microPower Comparator

1 Features

- Qualified for Automotive Applications
- AEC Q100-Qualified With the Following Results
  - Device Temperature Grade 1: –40°C to +125°C Ambient Operating Temperature
  - Device HBM ESD Classification Level 2 (TLV1701-Q1)
  - Device HBM ESD Classification Level 1C (TLV1702-Q1,TLV1704-Q1)
  - Device CDM ESD Classification Level C6
- Supply Range: 2.2 V to 36 V or ±1.1 V to ±18 V
- Low Quiescent Current: 55 µA per Comparator
- Input Common-Mode Range Includes Both Rails
- Low Propagation Delay: 560 ns
- Low Input Offset Voltage: 300 µV
- Open Collector Outputs:
  - Up to 36 V Above Negative Supply Regardless of Supply Voltage
- Industrial Temperature Range: –40°C to +125°C
- Small Packages:
  - Single: SOT23-5 and SC-70-5
  - Dual: VSSOP-8
  - Quad: TSSOP-14

2 Applications

- Overvoltage and Undervoltage Detectors
- Window Comparators
- Overcurrent Detectors
- Zero-Crossing Detectors
- System Monitoring for:
  - White Goods
  - Automotive
  - Medical

3 Description

The TLV1701-Q1 (Single), TLV1702-Q1 (Dual) and TLV1704-Q1 (Quad) devices offers a wide supply range, rail-to-rail inputs, low quiescent current, and low propagation delay. All these features come in industry-standard, extremely-small packages, making these devices the best general-purpose comparators available.

The open collector output offers the advantage of allowing the output to be pulled to any voltage rail up to 36 V above the negative power supply, regardless of the TLV170x-Q1 supply voltage.

The device is a microPower comparator. Low input offset voltage, low input bias currents, low supply current, and open-collector configuration make the TLV170x-Q1 device flexible enough to handle almost any application, from simple voltage detection to driving a single relay.

The device is specified for operation across the expanded industrial temperature range of –40°C to +125°C.

Device Information(1)

PART NUMBER	PACKAGE	BODY SIZE (NOM)
TLV1701-Q1	SOT-23 (5)	1.60 mm × 2.90 mm
	SC-70 (5)	1.25 mm × 2.00 mm
TLV1702-Q1	VSSOP (8)	3.00 mm × 3.00 mm
TLV1704-Q1	TSSOP (14)	4.40 mm × 5.00 mm

(1) For all available packages, see the package option addendum at the end of the data sheet.

TLV1702-Q1 as a Window Comparator

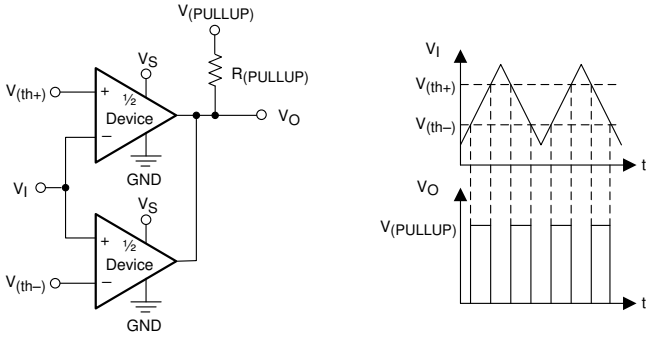

Stable Propagation Delay vs Temperature

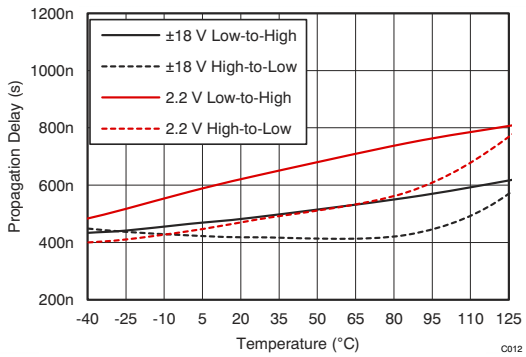

An IMPORTANT NOTICE at the end of this data sheet addresses availability, warranty, changes, use in safety-critical applications, intellectual property matters and other important disclaimers. PRODUCTION DATA.

Table of Contents

1 **Features** ... 1
2 **Applications** ... 1
3 **Description** ... 1
4 **Revision History** ... 2
5 **Device Comparison Table** ... 3
6 **Pin Configuration and Functions** ... 4
7 **Specifications** ... 5
7.1 Absolute Maximum Ratings ... 5
7.2 ESD Ratings ... 5
7.3 Recommended Operating Conditions ... 5
7.4 Thermal Information ... 5
7.5 Electrical Characteristics ... 6
7.6 Switching Characteristics ... 6
7.7 Typical Characteristics ... 7
8 **Detailed Description** ... 10
8.1 Overview ... 10
8.2 Functional Block Diagram ... 10
8.3 Feature Description ... 11
8.4 Device Functional Modes ... 11
9 **Application and Implementation** ... 12
9.1 Application Information ... 12
9.2 Typical Application ... 12
10 **Power Supply Recommendations** ... 13
11 **Layout** ... 14
11.1 Layout Guidelines ... 14
11.2 Layout Example ... 14
12 **Device and Documentation Support** ... 15
12.1 Documentation Support ... 15
12.2 Related Links ... 15
12.3 Receiving Notification of Documentation Updates 15
12.4 Support Resources ... 15
12.5 Trademarks ... 15
12.6 Electrostatic Discharge Caution ... 15
12.7 Glossary ... 15
13 **Mechanical, Packaging, and Orderable Information** ... 15

4 Revision History

NOTE: Page numbers for previous revisions may differ from page numbers in the current version.

Changes from Revision B (September 2017) to Revision C	Page
• Added DCK Package Information	1
• Changed incorrect front page HBM ESD classification level from 3A to 2 for TLV1701-Q1	1
• Changed incorrect front page CDM from C5 back to C6	1

Changes from Revision A (December 2015) to Revision B	Page
• Added TLV1701-Q1 device to data sheet	1
• Added TLV1701-Q1 to ESD table and specified the ESD ratings under each device	5

Changes from Original (November 2015) to Revision A	Page
• Added TLV1704-Q1 device to data sheet	1

Copyright © 2015–2019, Texas Instruments Incorporated

5 Device Comparison Table

Table 1. Related Products

DEVICE	FEATURES
TLC3702-Q1	Push-pull, 20-µA, 20-mA drive
TLC3704-Q1	
TLV3012-Q1	Push-pull, 5-µA, integrated 1.242-V reference
TLV3501-Q1	Push-Pull, 3.2 mA, 4.5-ns propagation delay
TLV3502-Q1	
TLV3701-Q1	Push-pull, 560-nA, reverse battery to 16 V
TLV3702-Q1	
REF50xx-Q1	Series reference, 0.1% tolerance, 8 ppm/°C
TL4050xx-Q1	Shunt reference, 0.1% tolerance, 50 ppm/°C
TLVH431-Q1	Adjustable Shunt Reference, 1.24 V to 18 V

6 Pin Configuration and Functions

TLV1701-Q1 DBV and DCK Packages
5-Pin SOT-23 and SC70
Top View

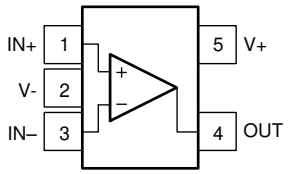

TLV1702-Q1 DGK Package
8-Pin VSSOP
Top View

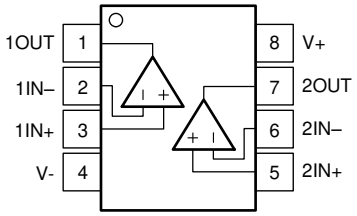

TLV1704-Q1 PW Package
14-Pin TSSOP
Top View

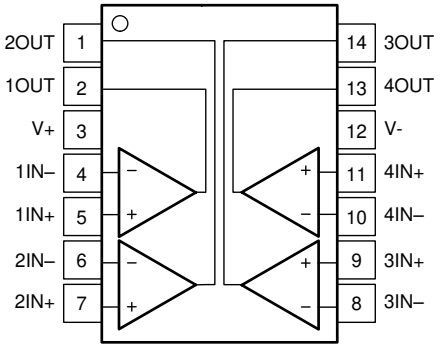

Pin Functions

PIN				I/O	DESCRIPTION
NAME	TLV1701-Q1 DBV, DCK	TLV1702-Q1 DGK	TLV1704-Q1 PW		
IN+	1	—	—	I	Noninverting input
1IN+	—	3	5	I	Noninverting input, channel 1
2IN+	—	5	7	I	Noninverting input, channel 2
3IN+	—	—	9	I	Noninverting input, channel 3
4IN+	—	—	11	I	Noninverting input, channel 4
IN–	3	—	—	I	Inverting input
1IN–	—	2	4	I	Inverting input, channel 1
2IN–	—	6	6	I	Inverting input, channel 2
3IN–	—	—	8	I	Inverting input, channel 3
4IN–	—	—	10	I	Inverting input, channel 4
OUT	4	—	—	O	Output
1OUT	—	1	2	O	Output, channel 1
2OUT	—	7	1	O	Output, channel 2
3OUT	—	—	14	O	Output, channel 3
4OUT	—	—	13	O	Output, channel 4
V+	5	8	3	—	Positive (highest) power supply
V–	2	4	12	—	Negative (lowest) power supply

Copyright © 2015–2019, Texas Instruments Incorporated

7 Specifications

7.1 Absolute Maximum Ratings

over operating free-air temperature range (unless otherwise noted)[1]

		MIN	MAX	UNIT
Supply voltage			40 (±20)	V
Signal input pins	Voltage[2]	(V_S–) – 0.5	(V_S+) + 0.5	V
	Current[2]		±10	mA
Output short-circuit[3]		Continuous		mA
Operating temperature		–55	150	°C
Junction temperature, T_J			150	°C
Storage temperature, T_{stg}		–65	150	°C

(1) Stresses beyond those listed under *Absolute Maximum Ratings* may cause permanent damage to the device. These are stress ratings only, and functional operation of the device at these or any other conditions beyond those indicated under *Recommended Operating Conditions* is not implied. Exposure to absolute-maximum-rated conditions for extended periods may affect device reliability.
(2) Input pins are diode-clamped to the power-supply rails. Input signals that can swing more than 0.5 V beyond the supply rails must be current limited to 10 mA or less.
(3) Short-circuit to ground; one comparator per package.

7.2 ESD Ratings

			VALUE	UNIT
TLV1701-Q1				
$V_{(ESD)}$	Electrostatic discharge	Human-body model (HBM), per AEC Q100-002[1]	±2000	V
		Charged-device model (CDM), per AEC Q100-011	±1000	
TLV1702-Q1				
$V_{(ESD)}$	Electrostatic discharge	Human-body model (HBM), per AEC Q100-002[1]	±1000	V
		Charged-device model (CDM), per AEC Q100-011	±1000	
TLV1704-Q1				
$V_{(ESD)}$	Electrostatic discharge	Human-body model (HBM), per AEC Q100-002[1]	±1000	V
		Charged-device model (CDM), per AEC Q100-011	±1000	

(1) AEC Q100-002 indicates that HBM stressing shall be in accordance with the ANSI/ESDA/JEDEC JS-001 specification.

7.3 Recommended Operating Conditions

over operating free-air temperature range (unless otherwise noted)

	MIN	NOM	MAX	UNIT
Supply voltage V_S = (V_S+) – (V_S–)	2.2 (±1.1)		36 (±18)	V
Specified temperature	–40		125	°C

7.4 Thermal Information

THERMAL METRIC[1]		TLV1701-Q1		TLV1702-Q1	TLV1704-Q1	UNIT
		DBV (SOT-23)	DCK (SC-70)	DGK (VSSOP)	PW (TSSOP)	
		5 PINS	5 PINS	8 PINS	14 PINS	
$R_{\theta JA}$	Junction-to-ambient thermal resistance	233.1	222.5	199	128.1	°C/W
$R_{\theta JC(top)}$	Junction-to-case (top) thermal resistance	156.4	137.2	89.5	56.5	°C/W
$R_{\theta JB}$	Junction-to-board thermal resistance	60.6	71.3	120.4	69.9	°C/W
ψ_{JT}	Junction-to-top characterization parameter	35.7	44.6	22	9.1	°C/W
ψ_{JB}	Junction-to-board characterization parameter	59.7	71.0	118.7	69.3	°C/W
$R_{\theta JC(bot)}$	Junction-to-case (bottom) thermal resistance	N/A	N/A	N/A	N/A	°C/W

(1) For more information about traditional and new thermal metrics, see the *Semiconductor and IC Package Thermal Metrics* application report.

Copyright © 2015–2019, Texas Instruments Incorporated

7.5 Electrical Characteristics

at T_A = 25°C, V_S = 2.2 V to 36 V, C_L = 15 pF, R_{PULLUP} = 5.1 kΩ, V_{CM} = V_S / 2, and V_S = V_{PULLUP} (unless otherwise noted)

PARAMETER		TEST CONDITIONS	MIN	TYP	MAX	UNIT
OFFSET VOLTAGE						
V_{OS}	Input offset voltage	T_A = 25°C, V_S = 2.2 V		±0.5	±3.5	mV
		T_A = 25°C, V_S = 36 V		±0.3	±2.5	mV
		T_A = –40°C to +125°C			±5.5	mV
		T_A = 25°C, V_S = 36 V, TLV1701-Q1 Only		±0.4	±3.2	
		T_A = –40°C to +125°C, TLV1701-Q1 Only			±6.3	
dV_{OS}/dT	Input offset voltage drift	T_A = –40°C to +125°C		±4	±20	µV/°C
PSRR	Power-supply rejection ratio	T_A = 25°C		15	100	µV/V
		T_A = –40°C to +125°C		20		µV/V
INPUT VOLTAGE RANGE						
V_{CM}	Common-mode voltage range	T_A = –40°C to +125°C	(V–)		(V+)	V
INPUT BIAS CURRENT						
I_B	Input bias current	T_A = 25°C		5	15	nA
		T_A = –40°C to +125°C			20	nA
I_{OS}	Input offset current			0.5		nA
C_{LOAD}	Capacitive load drive		See *Typical Characteristics*			
OUTPUT						
V_O	Voltage output swing from rail	I_O ≤ 4 mA, input overdrive = 100 mV, V_S = 36 V			900	mV
		I_O = 0 mA, input overdrive = 100 mV, V_S = 36 V			600	mV
I_{SC}	Short circuit sink current			20		mA
	Output leakage current	V_{IN+} > $V_{IN–}$		70		nA
POWER SUPPLY						
V_S	Specified voltage range		2.2		36	V
I_Q	Quiescent current (per channel)	I_O = 0 A		55	75	µA
		I_O = 0 A, T_A = –40°C to +125°C			100	µA

7.6 Switching Characteristics

at T_A = 25°C, V_S = +2.2 V to +36 V, C_L = 15 pF, R_{PULLUP} = 5.1 kΩ, V_{CM} = V_S / 2, and V_S = V_{PULLUP} (unless otherwise noted)

PARAMETER		TEST CONDITIONS	MIN	TYP	MAX	UNIT
t_{pHL}	Propagation delay time, high-to-low	Input overdrive = 100 mV		460		ns
t_{pLH}	Propagation delay time, low-to-high	Input overdrive = 100 mV		560		ns
t_R	Rise time	Input overdrive = 100 mV		365		ns
t_F	Fall time	Input overdrive = 100 mV		240		ns

Copyright © 2015–2019, Texas Instruments Incorporated

7.7 Typical Characteristics

at T_A = 25°C, V_S = 5 V, R_{PULLUP} = 5.1 kΩ, and input overdrive = 100 mV (unless otherwise noted)

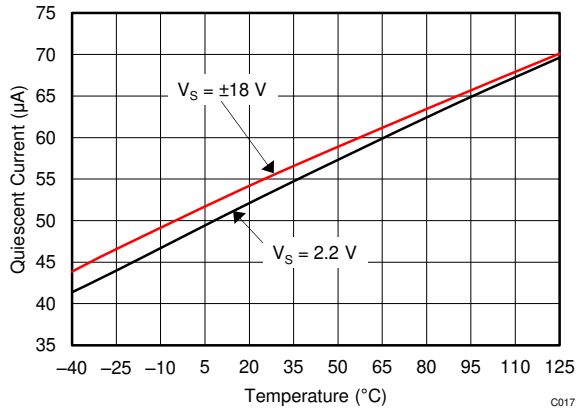

Figure 1. Quiescent Current vs Temperature

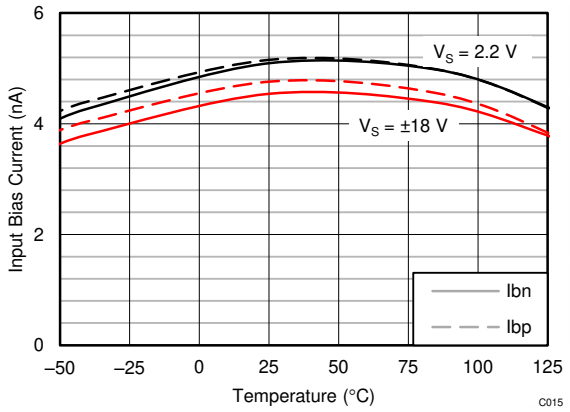

Figure 2. Input Bias Current vs Temperature

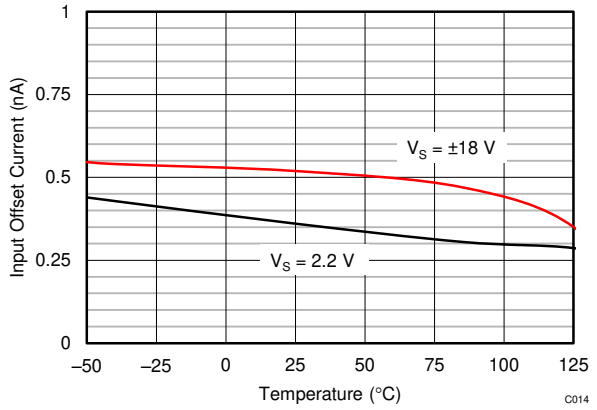

Figure 3. Input Offset Current vs Temperature

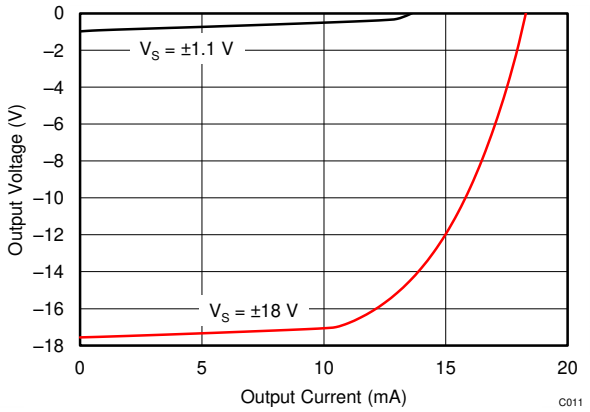

Figure 4. Output Voltage vs Output Current

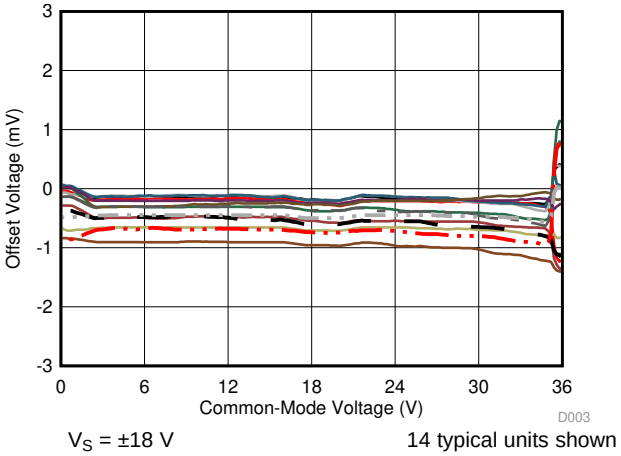

Figure 5. Offset Voltage vs Common-Mode Voltage

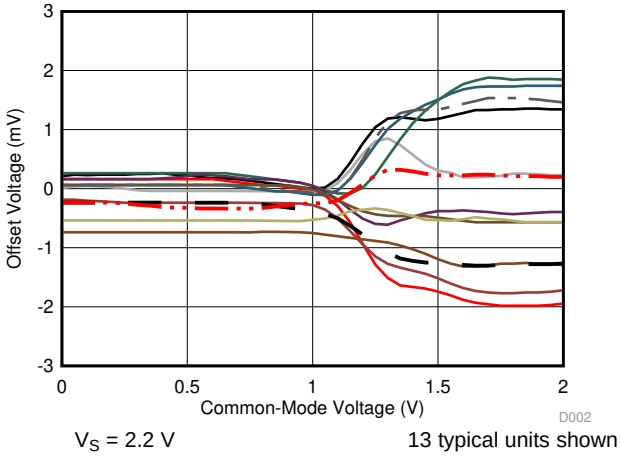

Figure 6. Offset Voltage vs Common-Mode Voltage

Typical Characteristics (continued)

at T_A = 25°C, V_S = 5 V, R_{PULLUP} = 5.1 kΩ, and input overdrive = 100 mV (unless otherwise noted)

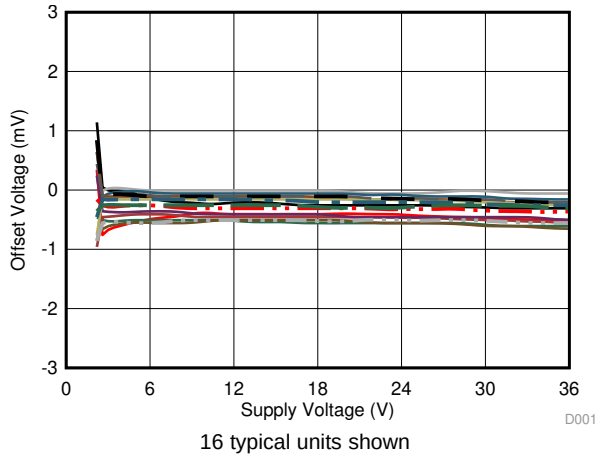

Figure 7. Offset Voltage vs Supply Voltage

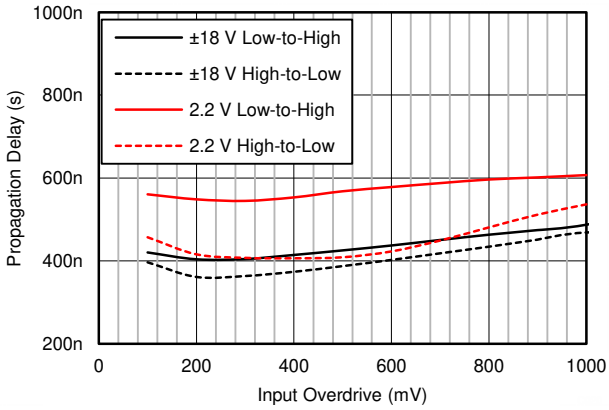

Figure 8. Propagation Delay vs Input Overdrive

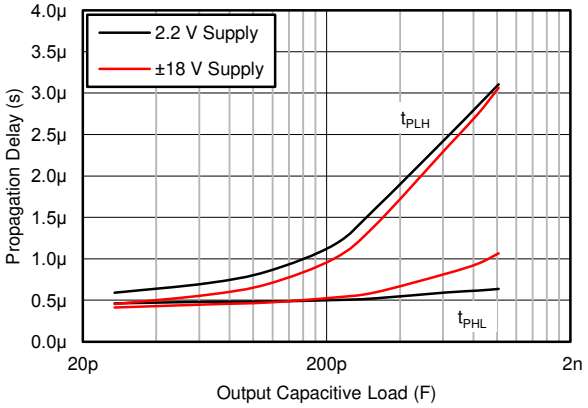

Figure 9. Propagation Delay vs Capacitive Load

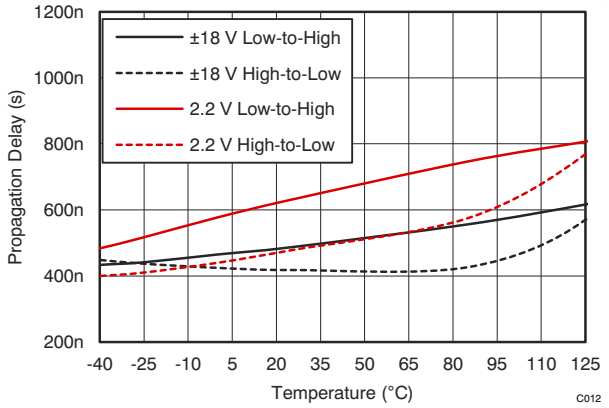

V_{OD} = 100 mV

Figure 10. Propagation Delay vs Temperature

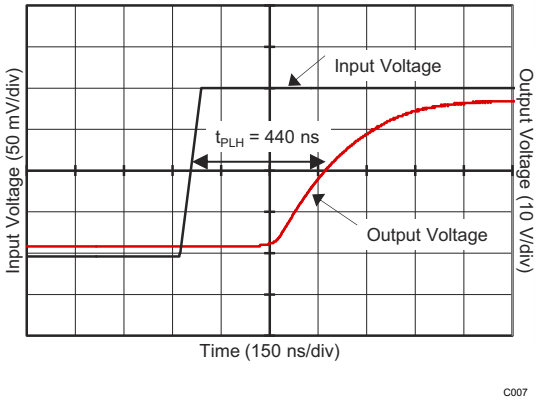

V_S = 36 V Overdrive = 100 mV

Figure 11. Propagation Delay (T_{pLH})

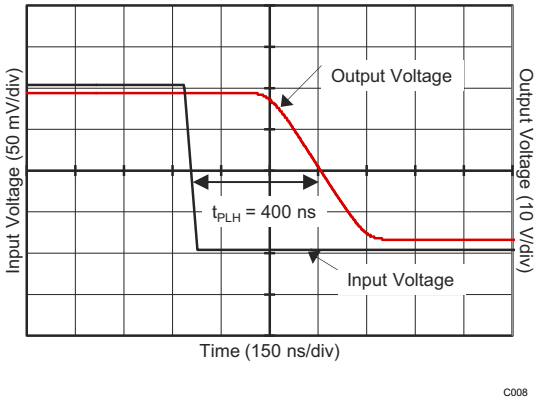

V_S = 36 V Overdrive = 100 mV

Figure 12. Propagation Delay (T_{pHL})

Copyright © 2015–2019, Texas Instruments Incorporated

Typical Characteristics (continued)

at T_A = 25°C, V_S = 5 V, R_{PULLUP} = 5.1 kΩ, and input overdrive = 100 mV (unless otherwise noted)

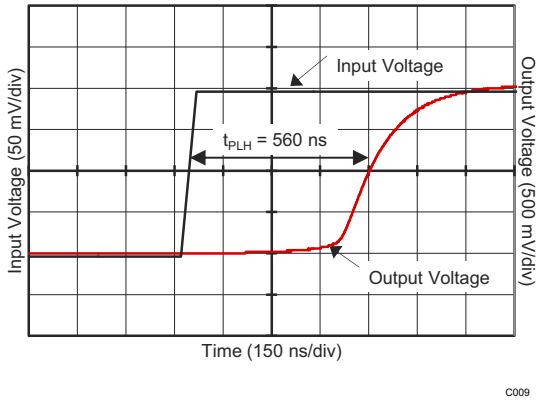

V_S = 2.2 V Overdrive = 100 mV

Figure 13. Propagation Delay (T_{pLH})

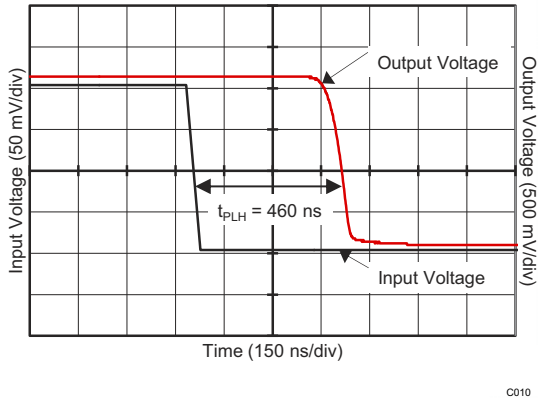

V_S = 2.2 V Overdrive = 100 mV

Figure 14. Propagation Delay (T_{pHL})

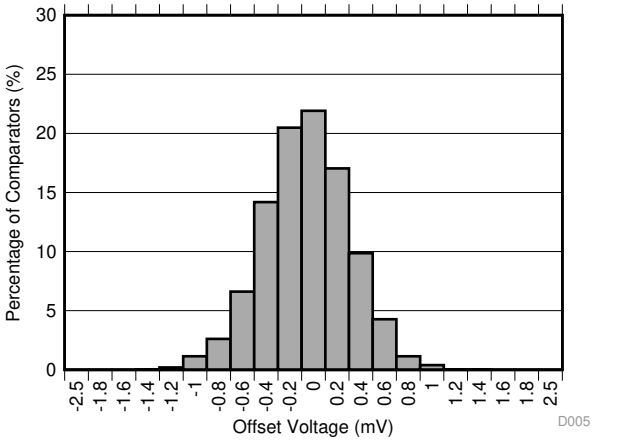

V_S = ±18 V Distribution taken from 2524 comparators

Figure 15. Offset Voltage Production Distribution

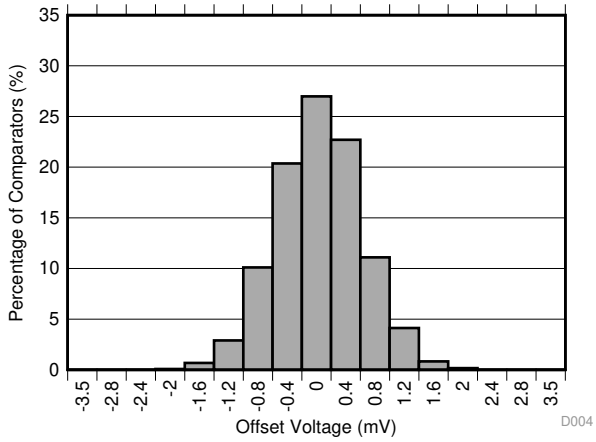

V_S = 2.2 V Distribution taken from 2524 comparators

Figure 16. Offset Voltage Production Distribution

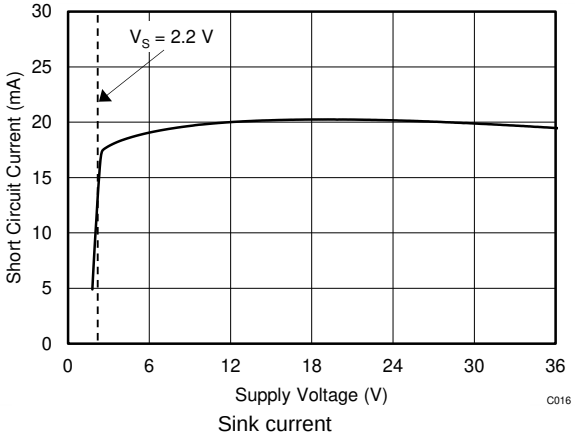

Sink current

Figure 17. Short-Circuit Current vs Supply Voltage

8 Detailed Description

8.1 Overview

The TLV170x-Q1 comparator features rail-to-rail input and output on supply voltages as high as 36 V. The rail-to-rail input stage enables detection of signals close to the supply and ground. The open-collector configuration allows the device to be used in wired-OR configurations, such as a window comparator. A low supply current of 55 μA per channel with small, space-saving packages, makes these comparators versatile for use in a wide range of applications, from portable to industrial.

8.2 Functional Block Diagram

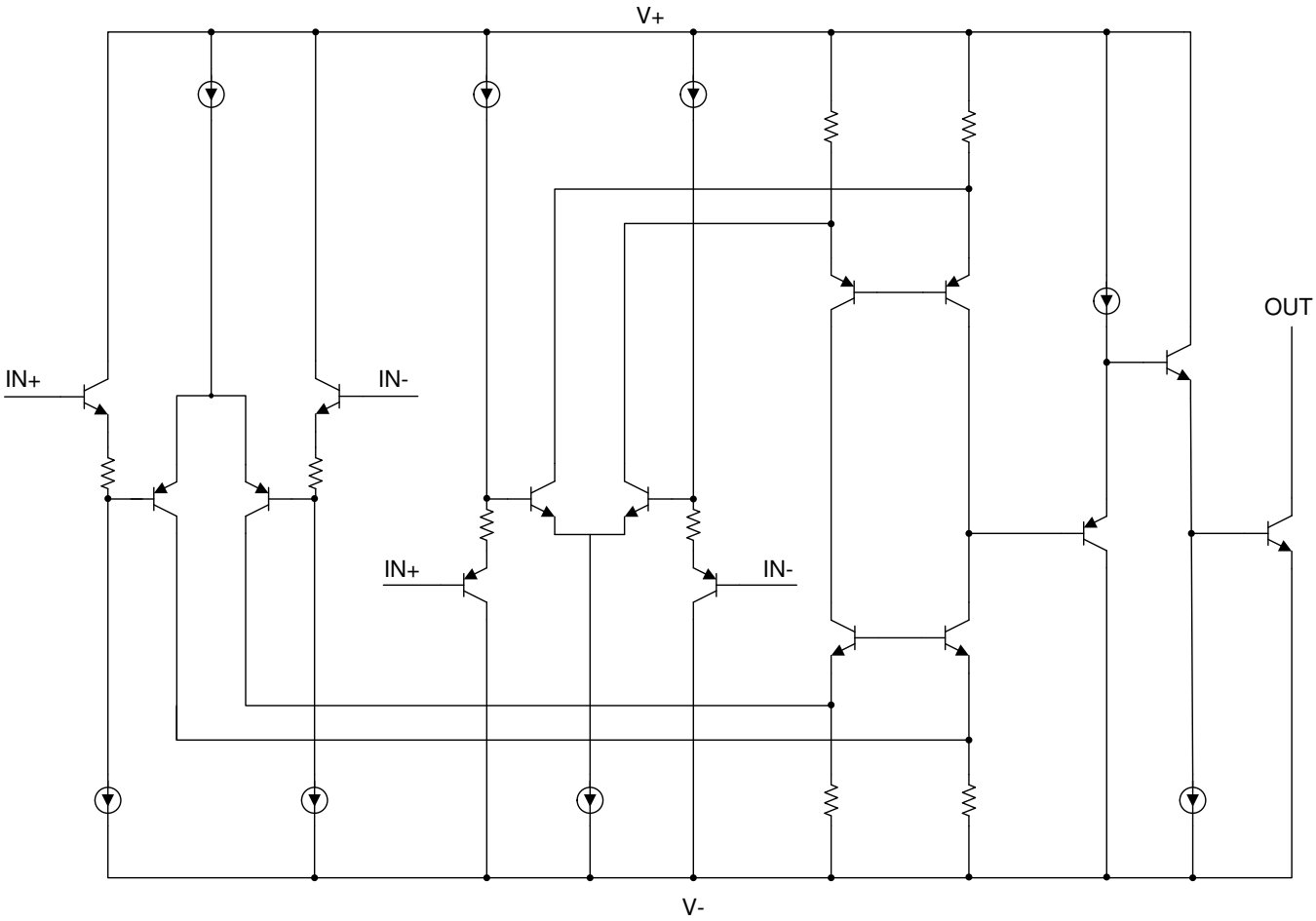

Copyright © 2015–2019, Texas Instruments Incorporated

8.3 Feature Description

8.3.1 Comparator Inputs

The TLV170x-Q1 device is a rail-to-rail input comparator, with an input common-mode range that includes the supply rails. The TLV170x-Q1 device is designed to prevent phase inversion when the input pins exceed the supply voltage. Figure 18 shows the TLV170x-Q1 device response when input voltages exceed the supply, resulting in no phase inversion.

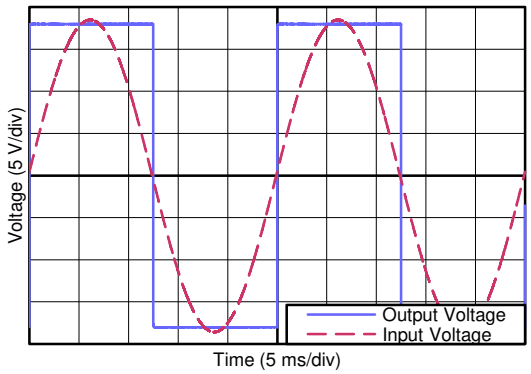

Figure 18. No Phase Inversion: Comparator Response to Input Voltage (Propagation Delay Included)

8.4 Device Functional Modes

8.4.1 Setting Reference Voltage

Using a stable reference is important when setting the transition point for the TLV170x-Q1 device. The REF3333, as shown in Figure 19, provides a 3.3-V reference voltage with low drift and only 3.9 μA of quiescent current.

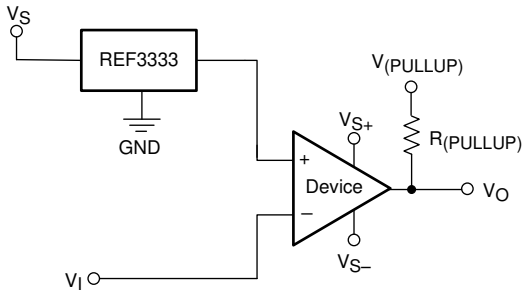

Figure 19. Reference Voltage for the TLV170x-Q1

9 Application and Implementation

NOTE

Information in the following applications sections is not part of the TI component specification, and TI does not warrant its accuracy or completeness. TI's customers are responsible for determining suitability of components for their purposes. Customers should validate and test their design implementation to confirm system functionality.

9.1 Application Information

The TLV170x-Q1 device can be used in a wide variety of applications, such as zero crossing detectors, window comparators, over and undervoltage detectors, and high-side voltage sense circuits.

9.2 Typical Application

Comparators are used to differentiate between two different signal levels. For example, a comparator differentiates between an overtemperature and normal-temperature condition. However, noise or signal variation at the comparison threshold causes multiple transitions. This application example sets upper and lower hysteresis thresholds to eliminate the multiple transitions caused by noise.

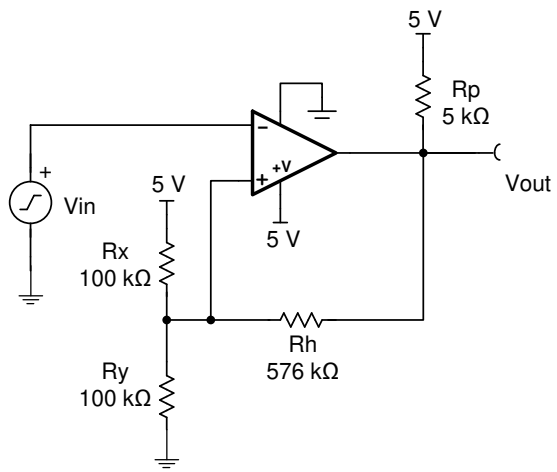

Figure 20. Comparator Schematic With Hysteresis

9.2.1 Design Requirements

The design requirements are as follows:

- Supply voltage: 5 V
- Input: 0 V to 5 V
- Lower threshold (VL) = 2.3 V ±0.1 V
- Upper threshold (VH) = 2.7 V ±0.1 V
- VH – VL = 2.4 V ±0.1 V
- Low-power consumption

Copyright © 2015–2019, Texas Instruments Incorporated

Typical Application (continued)

9.2.2 Detailed Design Procedure

Make a small change to the comparator circuit to add hysteresis. Hysteresis uses two different threshold voltages to avoid the multiple transitions introduced in the previous circuit. The input signal must exceed the upper threshold (VH) to transition low, or below the lower threshold (VL) to transition high.

Figure 20 illustrates hysteresis on a comparator. Resistor Rh sets the hysteresis level. An open-collector output stage requires a pullup resistor (Rp). The pullup resistor creates a voltage divider at the comparator output that introduces an error when the output is at logic high. This error can be minimized if Rh > 100 Rp.

When the output is at a logic high (5 V), Rh is in parallel with Rx (ignoring Rp). This configuration drives more current into Ry, and raises the threshold voltage (VH) to 2.7 V. The input signal must drive above VH = 2.7 V to cause the output to transition to logic low (0 V).

When the output is at logic low (0 V), Rh is in parallel with Ry. This configuration reduces the current into Ry, and reduces the threshold voltage to 2.3 V. The input signal must drive below VL = 2.3 V to cause the output to transition to logic high (5 V).

For more details on this design and other alternative devices that can be used in place of the TLV1702, refer to Precision Design TIPD144, *Comparator with Hysteresis Reference Design*.

9.2.3 Application Curve

Figure 21 shows the upper and lower thresholds for hysteresis. The upper threshold is 2.76 V and the lower threshold is 2.34 V, both of which are close to the design target.

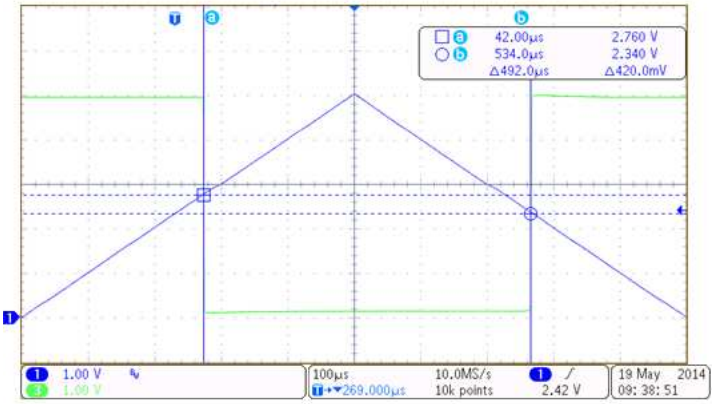

Figure 21. TLV1701 Upper and Lower Threshold With Hysteresis

10 Power Supply Recommendations

The TLV170x-Q1 device is specified for operation from 2.2 V to 36 V (±1.1 to ±18 V); many specifications apply from –40°C to +125°C. Parameters that can exhibit significant variance with regard to operating voltage or temperature are presented in the *Typical Characteristics* section.

CAUTION

Supply voltages larger than 40 V can permanently damage the device; see the *Absolute Maximum Ratings*.

Place 0.1-µF bypass capacitors close to the power-supply pins to reduce errors coupling in from noisy or high-impedance power supplies. For more detailed information on bypass capacitor placement; see the *Layout Guidelines* section.

11 Layout

11.1 Layout Guidelines

Comparators are very sensitive to input noise. For best results, maintain the following layout guidelines:

- Use a printed-circuit board (PCB) with a good, unbroken low-inductance ground plane. Proper grounding (use of ground plane) helps maintain specified performance of the TLV170x-Q1 device.
- To minimize supply noise, place a decoupling capacitor (0.1-µF ceramic, surface-mount capacitor) as close as possible to V_S as shown in Figure 22.
- On the inputs and the output, keep lead lengths as short as possible to avoid unwanted parasitic feedback around the comparator. Keep inputs away from the output.
- Solder the device directly to the PCB rather than using a socket.
- For slow-moving input signals, take care to prevent parasitic feedback. A small capacitor (1000 pF or less) placed between the inputs can help eliminate oscillations in the transition region. This capacitor causes some degradation to propagation delay when the impedance is low. Run the topside ground plane between the output and inputs.
- Run the ground pin ground trace under the device up to the bypass capacitor, shielding the inputs from the outputs.

11.2 Layout Example

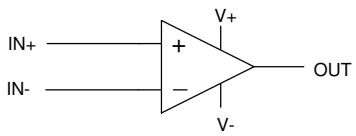

(Schematic Representation)

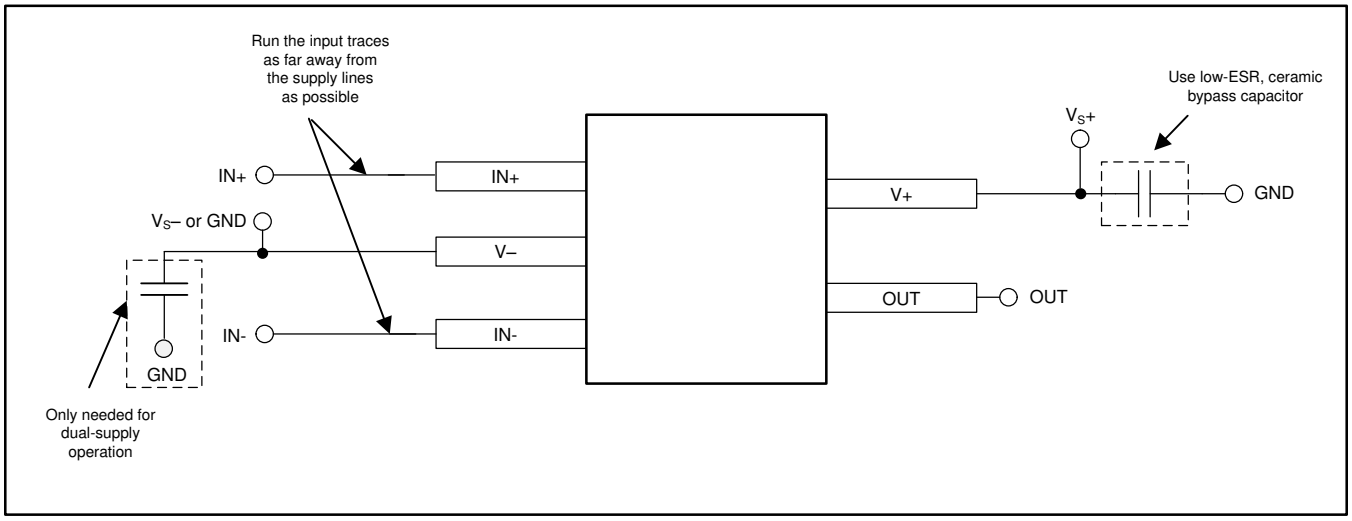

Figure 22. Comparator Board Layout

Copyright © 2015–2019, Texas Instruments Incorporated

12 Device and Documentation Support

12.1 Documentation Support

12.1.1 Related Documentation

For related documentation, see the following:

- *Precision Design, Comparator with Hysteresis Reference Design*, TIDU020
- *REF33xx 3.9-µA, SC70-3, SOT-23-3, and UQFN-8, 30-ppm/°C Drift Voltage Reference*, SBOS392

12.2 Related Links

Table 2 lists quick access links. Categories include technical documents, support and community resources, tools and software, and quick access to sample or buy.

Table 2. Related Links

PARTS	PRODUCT FOLDER	SAMPLE & BUY	TECHNICAL DOCUMENTS	TOOLS & SOFTWARE	SUPPORT & COMMUNITY
TLV1701-Q1	Click here	Click here	Click here	Click here	Click here
TLV1702-Q1	Click here	Click here	Click here	Click here	Click here
TLV1704-Q1	Click here	Click here	Click here	Click here	Click here

12.3 Receiving Notification of Documentation Updates

To receive notification of documentation updates, navigate to the device product folder on ti.com. In the upper right corner, click on *Alert me* to register and receive a weekly digest of any product information that has changed. For change details, review the revision history included in any revised document.

12.4 Support Resources

TI E2E™ support forums are an engineer's go-to source for fast, verified answers and design help — straight from the experts. Search existing answers or ask your own question to get the quick design help you need.

Linked content is provided "AS IS" by the respective contributors. They do not constitute TI specifications and do not necessarily reflect TI's views; see TI's Terms of Use.

12.5 Trademarks

E2E is a trademark of Texas Instruments.
All other trademarks are the property of their respective owners.

12.6 Electrostatic Discharge Caution

This integrated circuit can be damaged by ESD. Texas Instruments recommends that all integrated circuits be handled with appropriate precautions. Failure to observe proper handling and installation procedures can cause damage.

ESD damage can range from subtle performance degradation to complete device failure. Precision integrated circuits may be more susceptible to damage because very small parametric changes could cause the device not to meet its published specifications.

12.7 Glossary

SLYZ022 — *TI Glossary*.

This glossary lists and explains terms, acronyms, and definitions.

13 Mechanical, Packaging, and Orderable Information

The following pages include mechanical packaging and orderable information. This information is the most current data available for the designated devices. This data is subject to change without notice and revision of this document. For browser-based versions of this data sheet, refer to the left-hand navigation.

PACKAGING INFORMATION

Orderable Device	Status (1)	Package Type	Package Drawing	Pins	Package Qty	Eco Plan (2)	Lead finish/ Ball material (6)	MSL Peak Temp (3)	Op Temp (°C)	Device Marking (4/5)	Samples
TLV1701AQDCKRQ1	ACTIVE	SC70	DCK	5	3000	RoHS & Green	NIPDAU	Level-2-260C-1 YEAR	-40 to 125	1FG	Samples
TLV1701QDBVRQ1	ACTIVE	SOT-23	DBV	5	3000	RoHS & Green	NIPDAU	Level-2-260C-1 YEAR	-40 to 125	1701	Samples
TLV1702AQDGKRQ1	ACTIVE	VSSOP	DGK	8	2500	RoHS & Green	NIPDAUAG	Level-2-260C-1 YEAR	-40 to 125	1702Q	Samples
TLV1704AQPWRQ1	ACTIVE	TSSOP	PW	14	2000	RoHS & Green	NIPDAU	Level-2-260C-1 YEAR	-40 to 125	T1704Q1	Samples

(1) The marketing status values are defined as follows:
ACTIVE: Product device recommended for new designs.
LIFEBUY: TI has announced that the device will be discontinued, and a lifetime-buy period is in effect.
NRND: Not recommended for new designs. Device is in production to support existing customers, but TI does not recommend using this part in a new design.
PREVIEW: Device has been announced but is not in production. Samples may or may not be available.
OBSOLETE: TI has discontinued the production of the device.

(2) **RoHS:** TI defines "RoHS" to mean semiconductor products that are compliant with the current EU RoHS requirements for all 10 RoHS substances, including the requirement that RoHS substance do not exceed 0.1% by weight in homogeneous materials. Where designed to be soldered at high temperatures, "RoHS" products are suitable for use in specified lead-free processes. TI may reference these types of products as "Pb-Free".
RoHS Exempt: TI defines "RoHS Exempt" to mean products that contain lead but are compliant with EU RoHS pursuant to a specific EU RoHS exemption.
Green: TI defines "Green" to mean the content of Chlorine (Cl) and Bromine (Br) based flame retardants meet JS709B low halogen requirements of <=1000ppm threshold. Antimony trioxide based flame retardants must also meet the <=1000ppm threshold requirement.

(3) MSL, Peak Temp. - The Moisture Sensitivity Level rating according to the JEDEC industry standard classifications, and peak solder temperature.

(4) There may be additional marking, which relates to the logo, the lot trace code information, or the environmental category on the device.

(5) Multiple Device Markings will be inside parentheses. Only one Device Marking contained in parentheses and separated by a "~" will appear on a device. If a line is indented then it is a continuation of the previous line and the two combined represent the entire Device Marking for that device.

(6) Lead finish/Ball material - Orderable Devices may have multiple material finish options. Finish options are separated by a vertical ruled line. Lead finish/Ball material values may wrap to two lines if the finish value exceeds the maximum column width.

Important Information and Disclaimer: The information provided on this page represents TI's knowledge and belief as of the date that it is provided. TI bases its knowledge and belief on information provided by third parties, and makes no representation or warranty as to the accuracy of such information. Efforts are underway to better integrate information from third parties. TI has taken and

continues to take reasonable steps to provide representative and accurate information but may not have conducted destructive testing or chemical analysis on incoming materials and chemicals.
TI and TI suppliers consider certain information to be proprietary, and thus CAS numbers and other limited information may not be available for release.

In no event shall TI's liability arising out of such information exceed the total purchase price of the TI part(s) at issue in this document sold by TI to Customer on an annual basis.

OTHER QUALIFIED VERSIONS OF TLV1701-Q1, TLV1702-Q1, TLV1704-Q1 :

- Catalog : TLV1701, TLV1702, TLV1704

NOTE: Qualified Version Definitions:

- Catalog - TI's standard catalog product

TAPE AND REEL INFORMATION

REEL DIMENSIONS

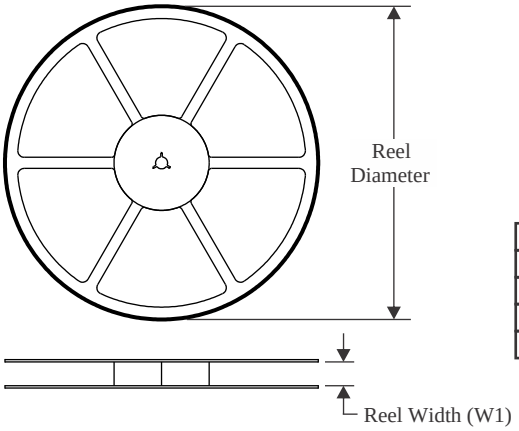

TAPE DIMENSIONS

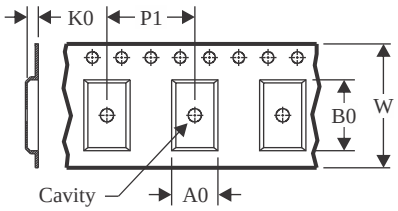

A0	Dimension designed to accommodate the component width
B0	Dimension designed to accommodate the component length
K0	Dimension designed to accommodate the component thickness
W	Overall width of the carrier tape
P1	Pitch between successive cavity centers

QUADRANT ASSIGNMENTS FOR PIN 1 ORIENTATION IN TAPE

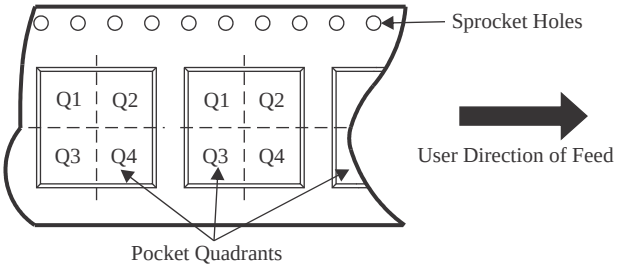

*All dimensions are nominal

Device	Package Type	Package Drawing	Pins	SPQ	Reel Diameter (mm)	Reel Width W1 (mm)	A0 (mm)	B0 (mm)	K0 (mm)	P1 (mm)	W (mm)	Pin1 Quadrant
TLV1701AQDCKRQ1	SC70	DCK	5	3000	178.0	9.0	2.4	2.5	1.2	4.0	8.0	Q3
TLV1701QDBVRQ1	SOT-23	DBV	5	3000	178.0	9.0	3.23	3.17	1.37	4.0	8.0	Q3
TLV1702AQDGKRQ1	VSSOP	DGK	8	2500	330.0	12.4	5.3	3.4	1.4	8.0	12.0	Q1
TLV1704AQPWRQ1	TSSOP	PW	14	2000	330.0	12.4	6.9	5.6	1.6	8.0	12.0	Q1

TAPE AND REEL BOX DIMENSIONS

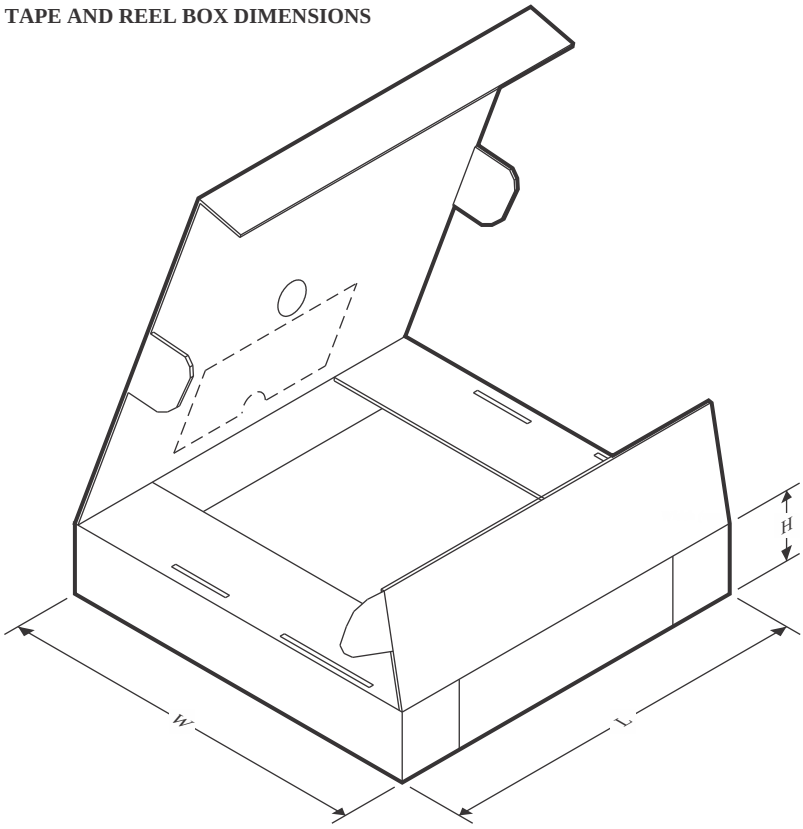

*All dimensions are nominal

Device	Package Type	Package Drawing	Pins	SPQ	Length (mm)	Width (mm)	Height (mm)
TLV1701AQDCKRQ1	SC70	DCK	5	3000	190.0	190.0	30.0
TLV1701QDBVRQ1	SOT-23	DBV	5	3000	180.0	180.0	18.0
TLV1702AQDGKRQ1	VSSOP	DGK	8	2500	366.0	364.0	50.0
TLV1704AQPWRQ1	TSSOP	PW	14	2000	356.0	356.0	35.0

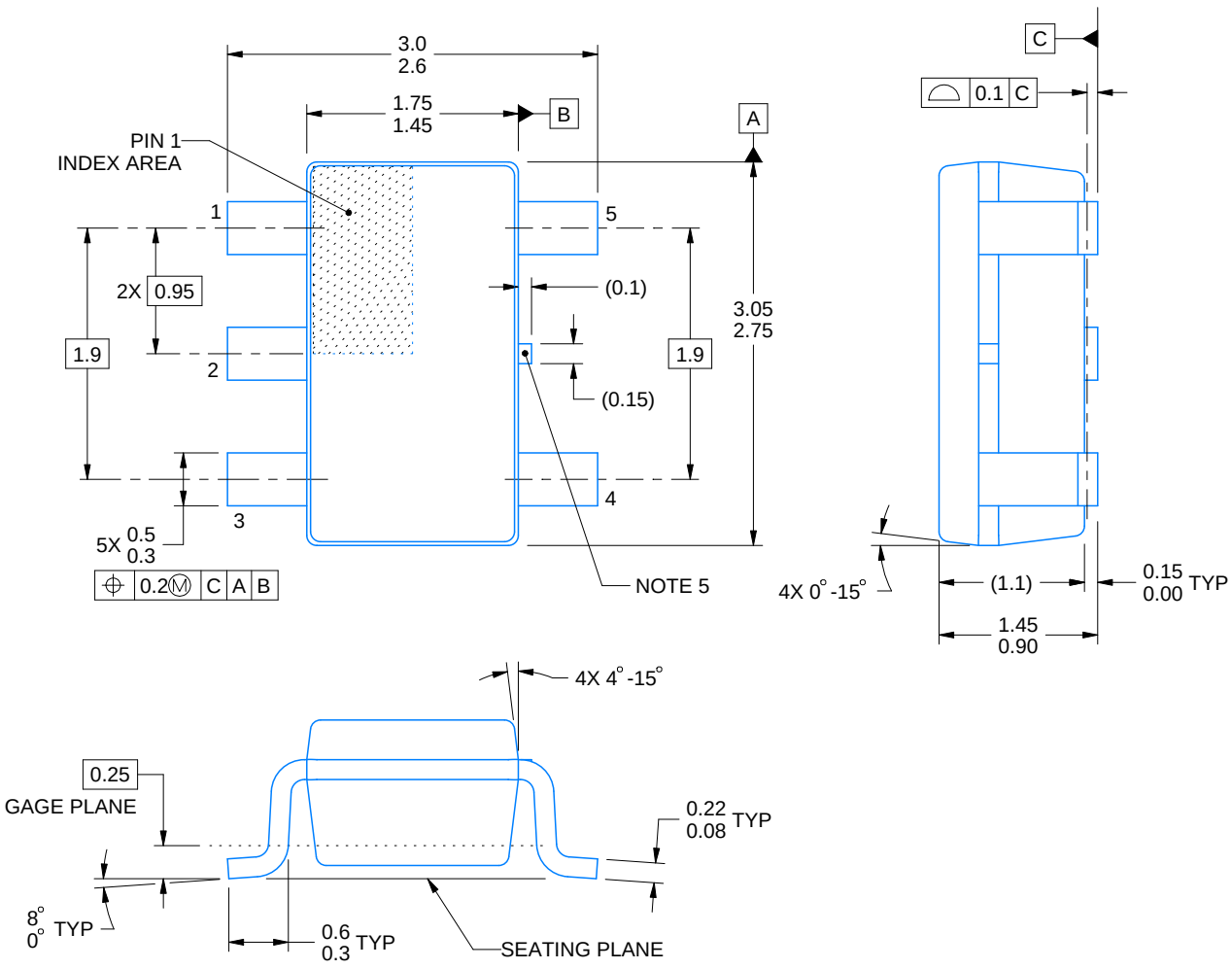

4214839/K 08/2024

NOTES:

1. All linear dimensions are in millimeters. Any dimensions in parenthesis are for reference only. Dimensioning and tolerancing per ASME Y14.5M.
2. This drawing is subject to change without notice.
3. Refernce JEDEC MO-178.
4. Body dimensions do not include mold flash, protrusions, or gate burrs. Mold flash, protrusions, or gate burrs shall not exceed 0.25 mm per side.
5. Support pin may differ or may not be present.

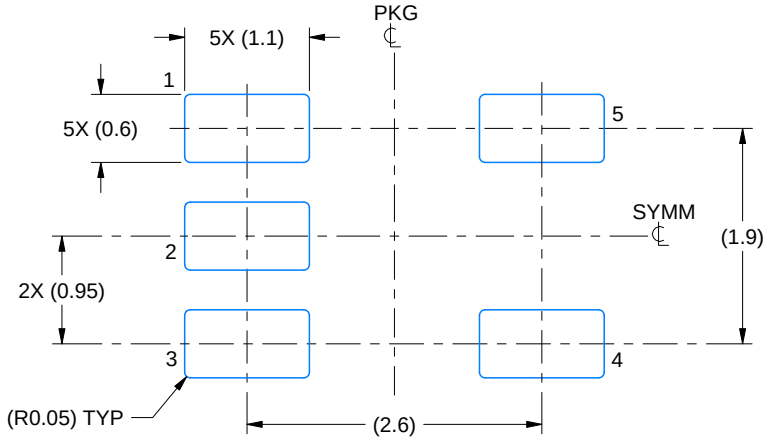

LAND PATTERN EXAMPLE
EXPOSED METAL SHOWN
SCALE:15X

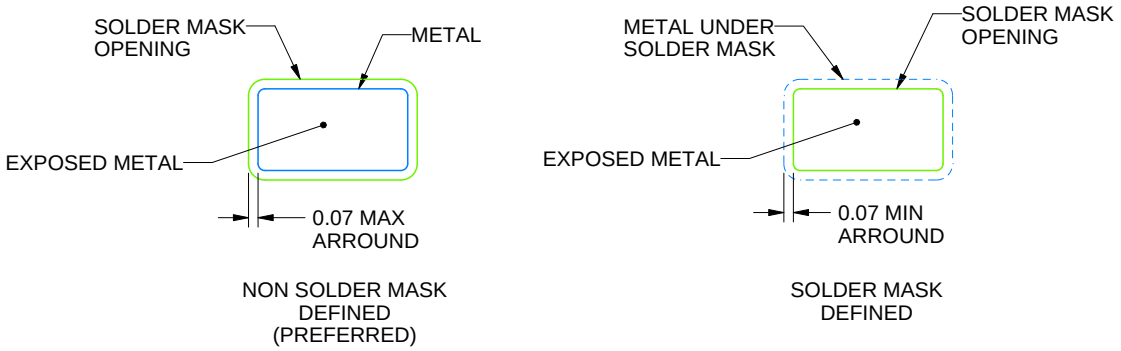

SOLDER MASK DETAILS

4214839/K 08/2024

NOTES: (continued)

6. Publication IPC-7351 may have alternate designs.
7. Solder mask tolerances between and around signal pads can vary based on board fabrication site.

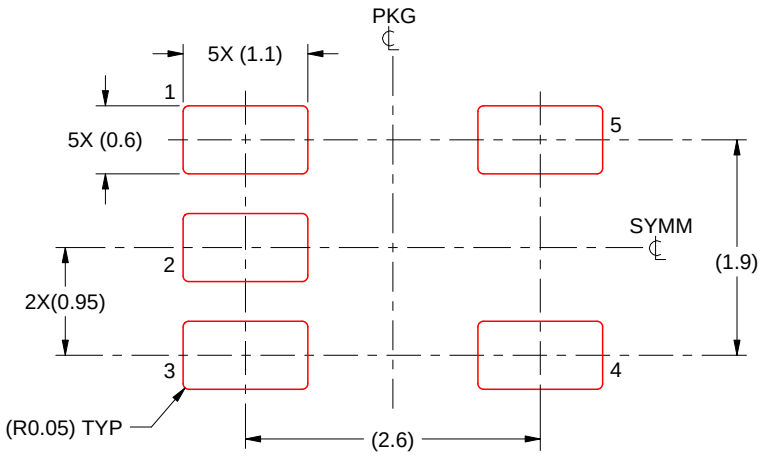

SOLDER PASTE EXAMPLE
BASED ON 0.125 mm THICK STENCIL
SCALE:15X

4214839/K 08/2024

NOTES: (continued)

8. Laser cutting apertures with trapezoidal walls and rounded corners may offer better paste release. IPC-7525 may have alternate design recommendations.
9. Board assembly site may have different recommendations for stencil design.

PACKAGE OUTLINE

DGK0008A

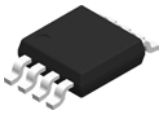

VSSOP - 1.1 mm max height

SMALL OUTLINE PACKAGE

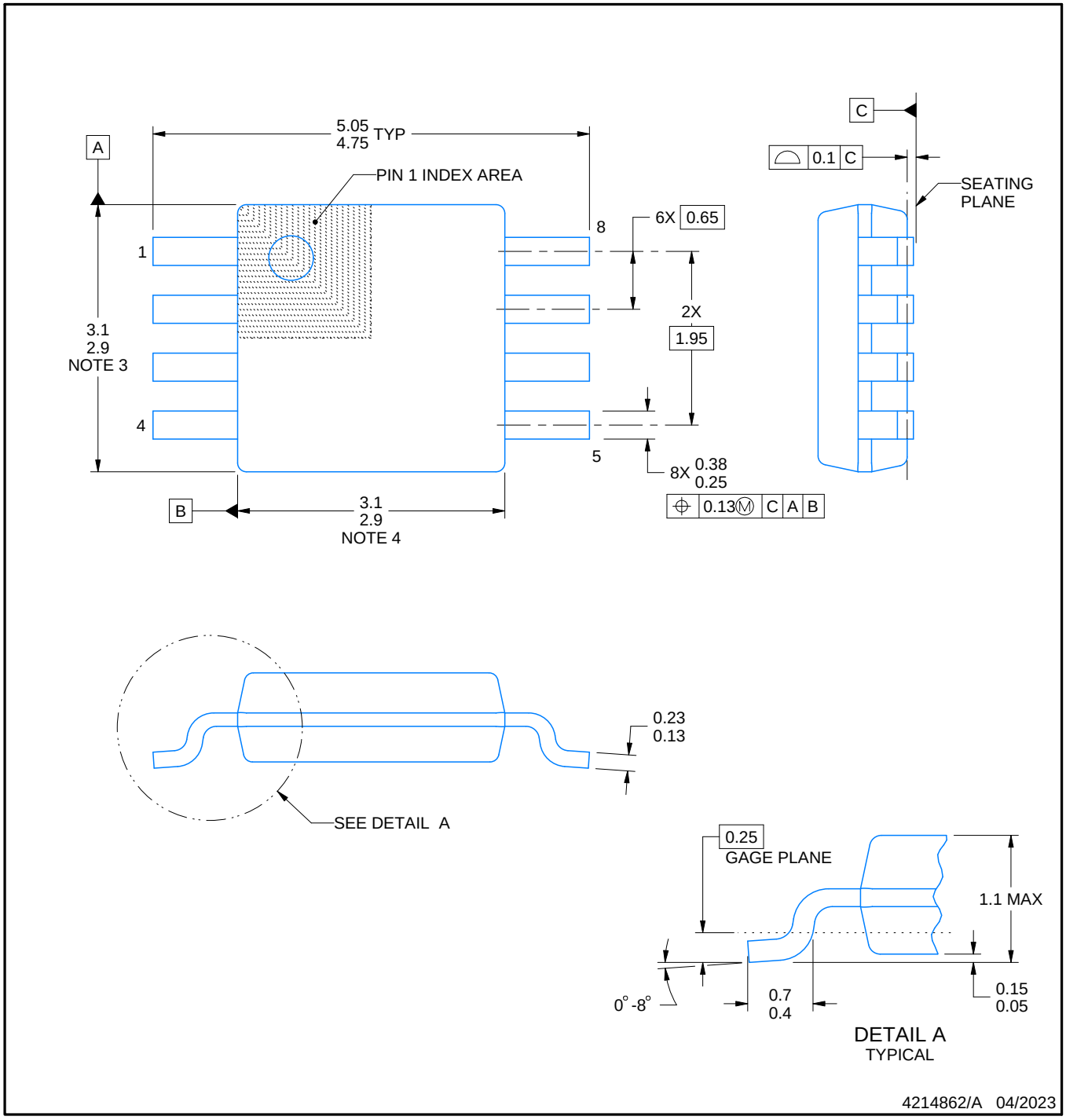

PowerPAD is a trademark of Texas Instruments.

NOTES:

1. All linear dimensions are in millimeters. Any dimensions in parenthesis are for reference only. Dimensioning and tolerancing per ASME Y14.5M.
2. This drawing is subject to change without notice.
3. This dimension does not include mold flash, protrusions, or gate burrs. Mold flash, protrusions, or gate burrs shall not exceed 0.15 mm per side.
4. This dimension does not include interlead flash. Interlead flash shall not exceed 0.25 mm per side.
5. Reference JEDEC registration MO-187.

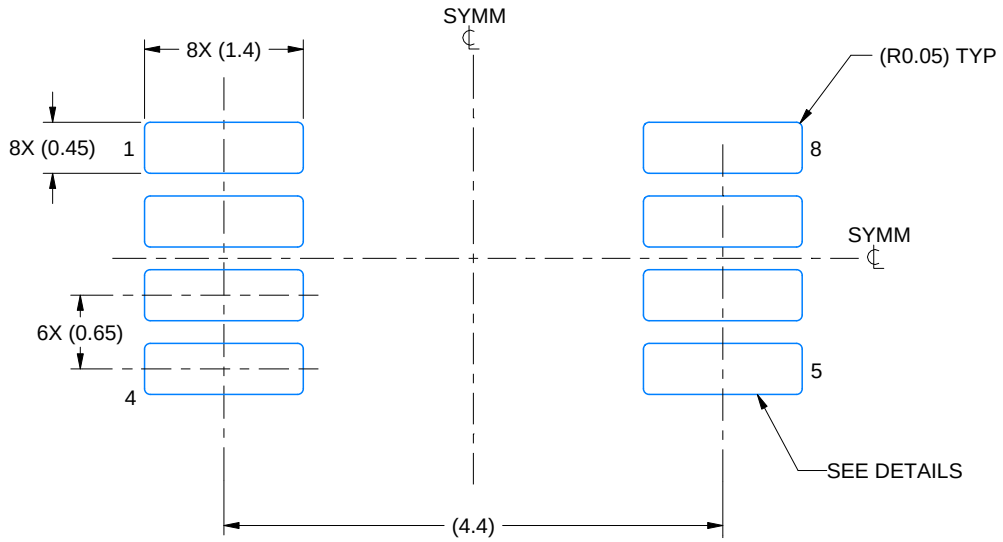

LAND PATTERN EXAMPLE
EXPOSED METAL SHOWN
SCALE: 15X

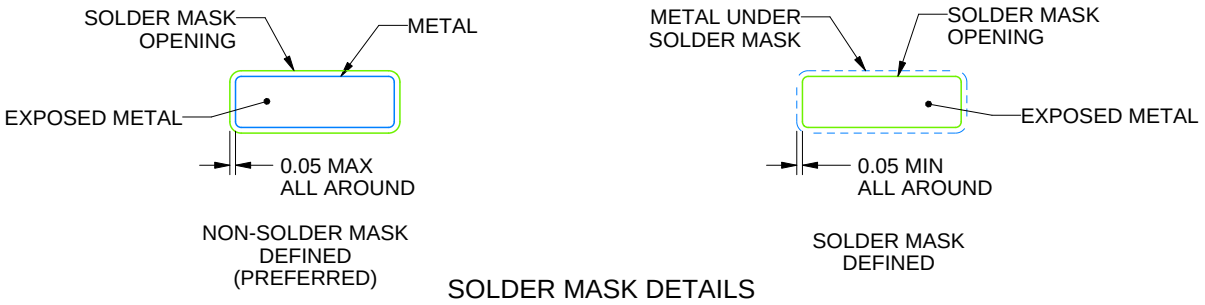

SOLDER MASK DETAILS

4214862/A 04/2023

NOTES: (continued)

6. Publication IPC-7351 may have alternate designs.
7. Solder mask tolerances between and around signal pads can vary based on board fabrication site.
8. Vias are optional depending on application, refer to device data sheet. If any vias are implemented, refer to their locations shown on this view. It is recommended that vias under paste be filled, plugged or tented.
9. Size of metal pad may vary due to creepage requirement.

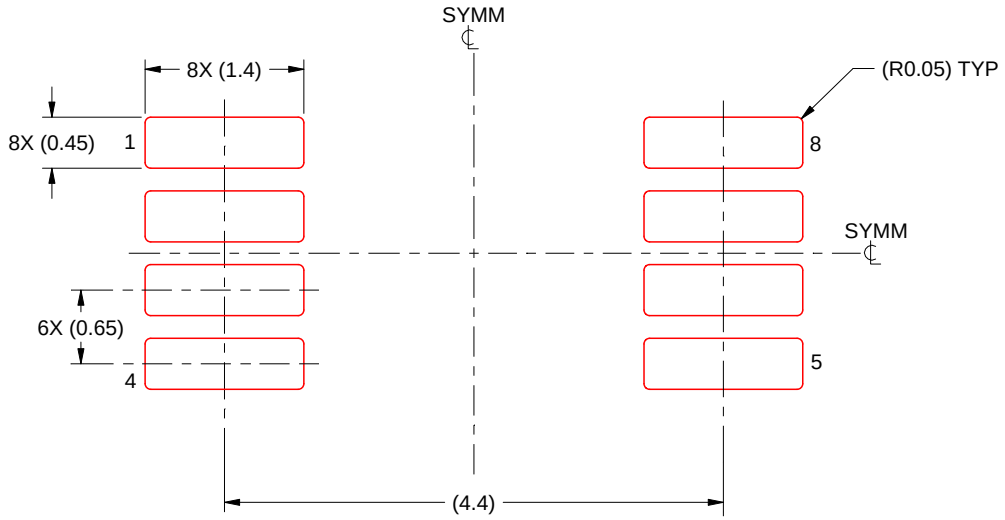

SOLDER PASTE EXAMPLE
SCALE: 15X

4214862/A 04/2023

NOTES: (continued)

11. Laser cutting apertures with trapezoidal walls and rounded corners may offer better paste release. IPC-7525 may have alternate design recommendations.
12. Board assembly site may have different recommendations for stencil design.

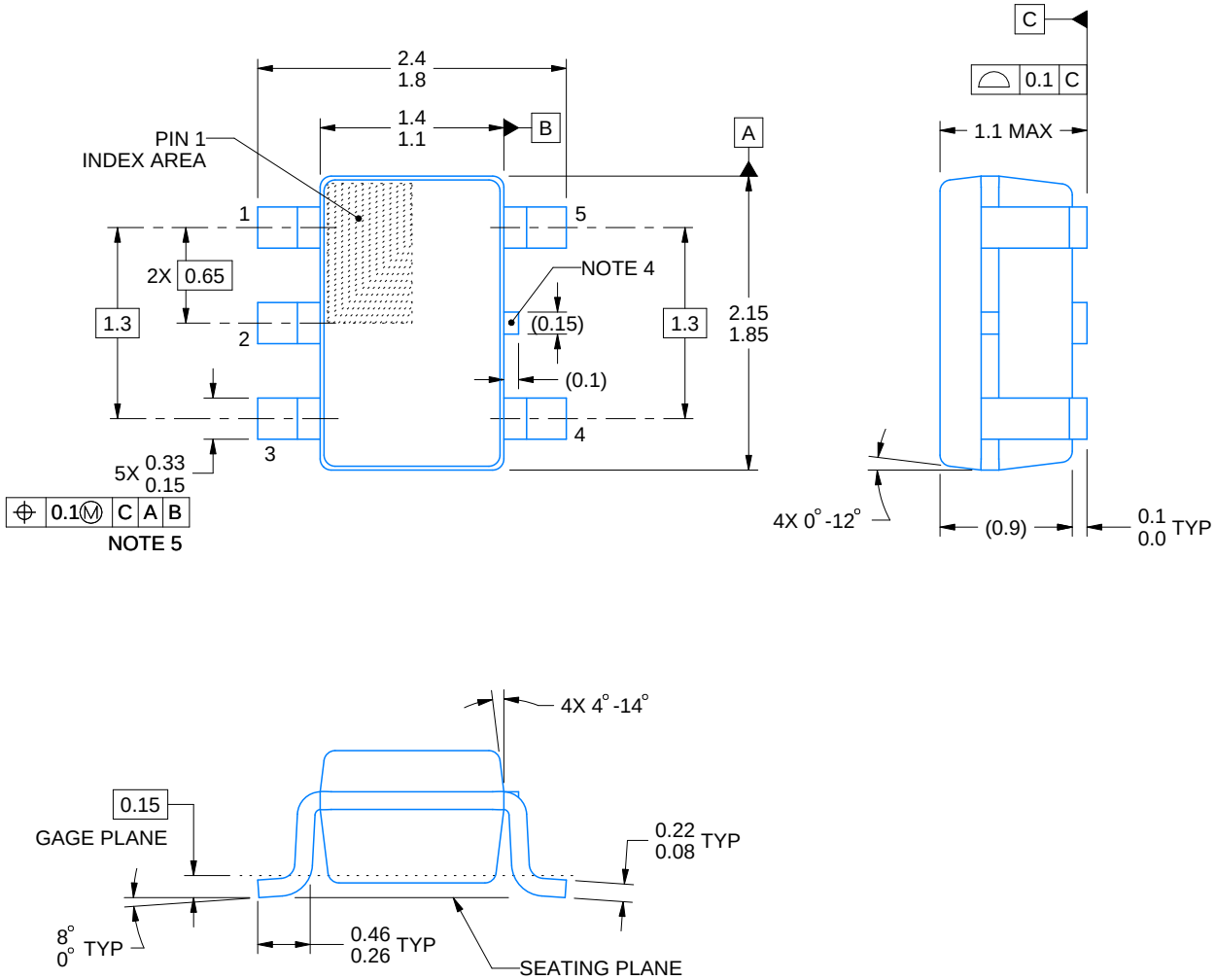

4214834/F 08/2024

NOTES:

1. All linear dimensions are in millimeters. Any dimensions in parenthesis are for reference only. Dimensioning and tolerancing per ASME Y14.5M.
2. This drawing is subject to change without notice.
3. Refernce JEDEC MO-203.
4. Support pin may differ or may not be present.
5. Lead width does not comply with JEDEC.
6. Body dimensions do not include mold flash, protrusions, or gate burrs. Mold flash, protrusions, or gate burrs shall not exceed 0.25mm per side

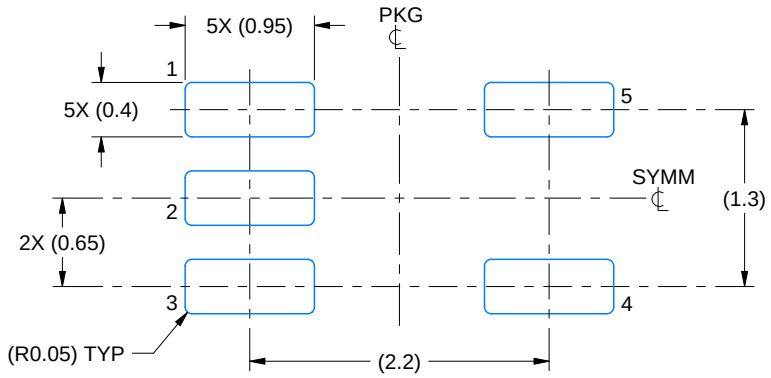

LAND PATTERN EXAMPLE
EXPOSED METAL SHOWN
SCALE:18X

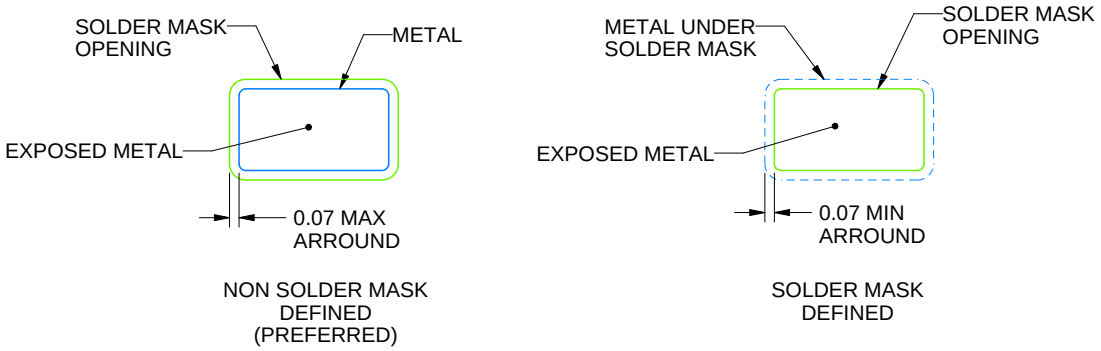

SOLDER MASK DETAILS

4214834/F 08/2024

NOTES: (continued)

7. Publication IPC-7351 may have alternate designs.
8. Solder mask tolerances between and around signal pads can vary based on board fabrication site.

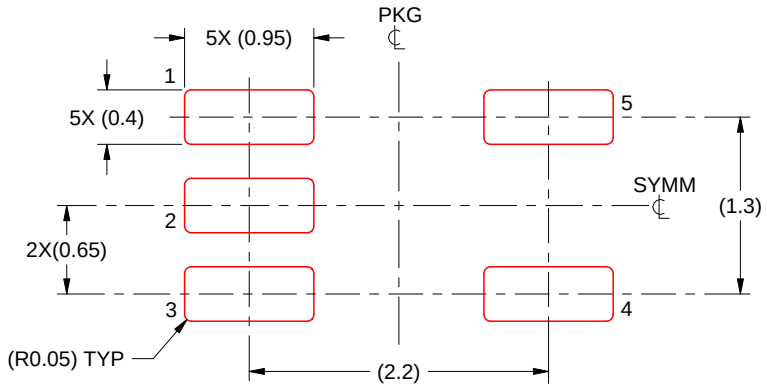

SOLDER PASTE EXAMPLE
BASED ON 0.125 THICK STENCIL
SCALE:18X

4214834/F 08/2024

NOTES: (continued)

9. Laser cutting apertures with trapezoidal walls and rounded corners may offer better paste release. IPC-7525 may have alternate design recommendations.
10. Board assembly site may have different recommendations for stencil design.

PW0014A

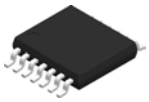

PACKAGE OUTLINE

TSSOP - 1.2 mm max height

SMALL OUTLINE PACKAGE

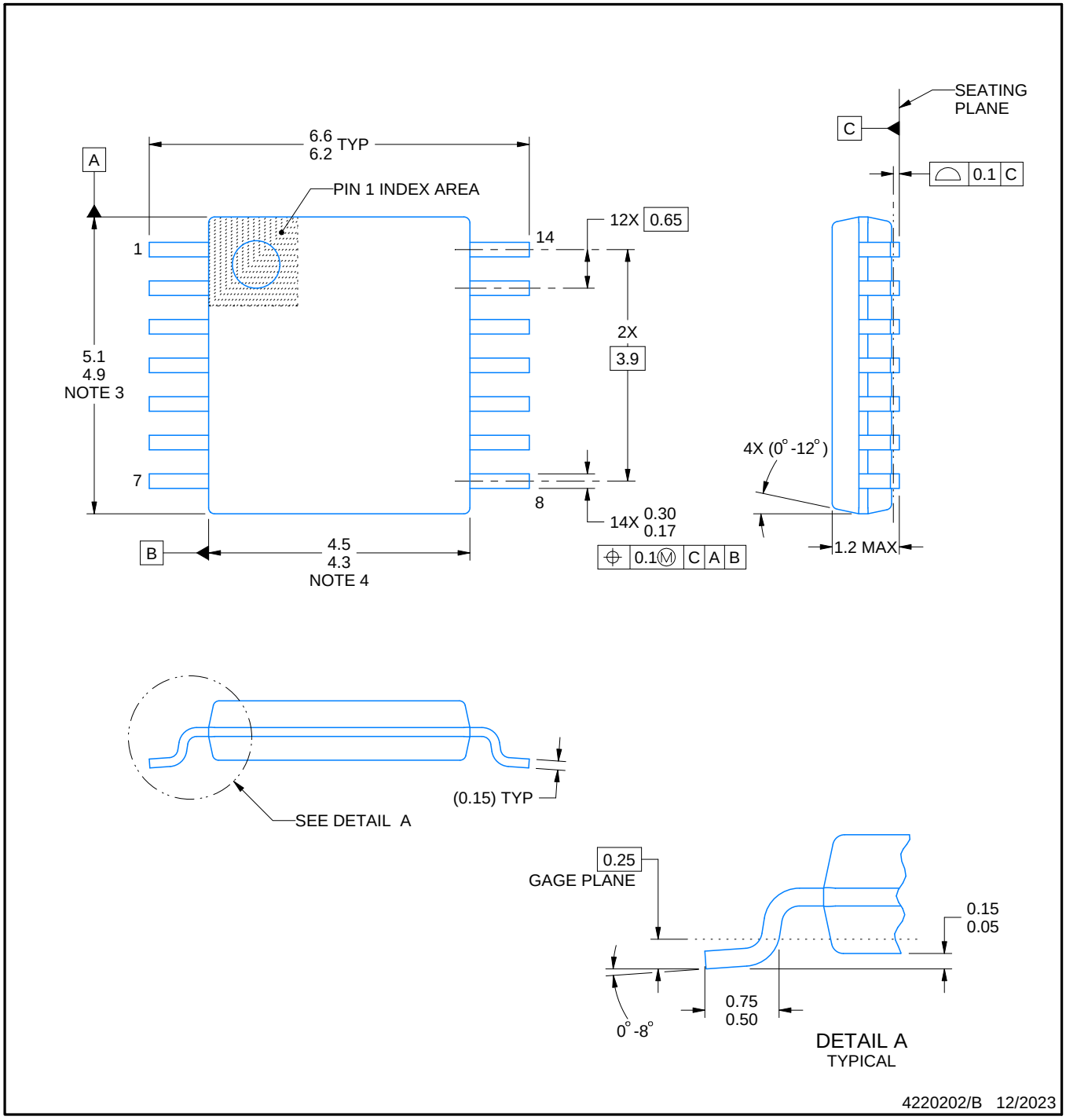

NOTES:

1. All linear dimensions are in millimeters. Any dimensions in parenthesis are for reference only. Dimensioning and tolerancing per ASME Y14.5M.
2. This drawing is subject to change without notice.
3. This dimension does not include mold flash, protrusions, or gate burrs. Mold flash, protrusions, or gate burrs shall not exceed 0.15 mm per side.
4. This dimension does not include interlead flash. Interlead flash shall not exceed 0.25 mm per side.
5. Reference JEDEC registration MO-153.

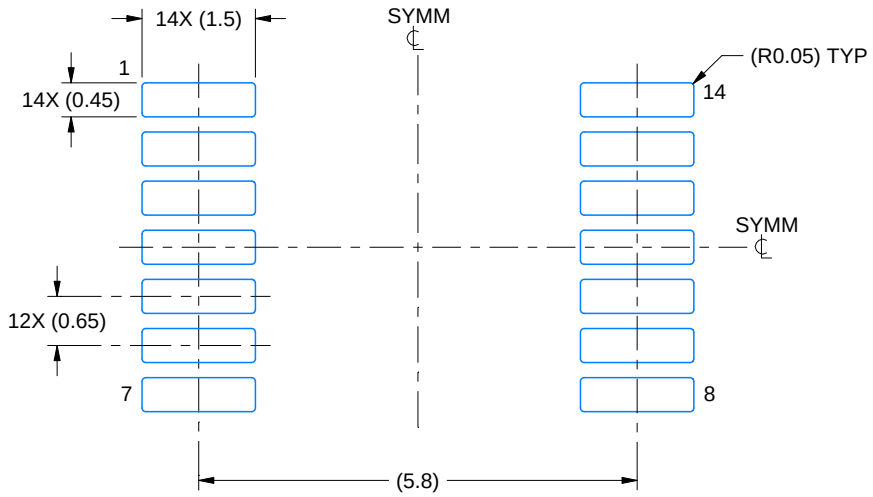

LAND PATTERN EXAMPLE
EXPOSED METAL SHOWN
SCALE: 10X

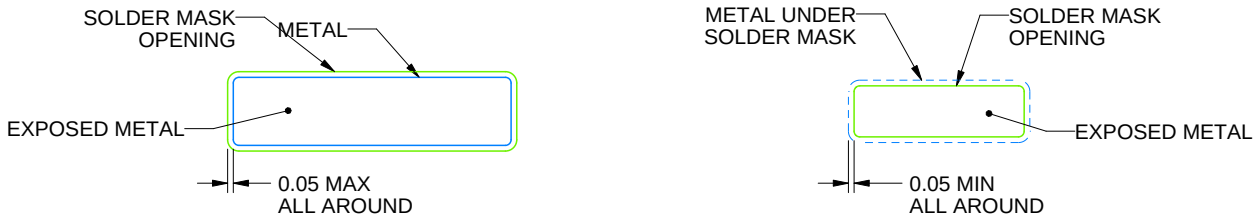

NON-SOLDER MASK DEFINED (PREFERRED)

SOLDER MASK DEFINED

SOLDER MASK DETAILS

4220202/B 12/2023

NOTES: (continued)

6. Publication IPC-7351 may have alternate designs.
7. Solder mask tolerances between and around signal pads can vary based on board fabrication site.

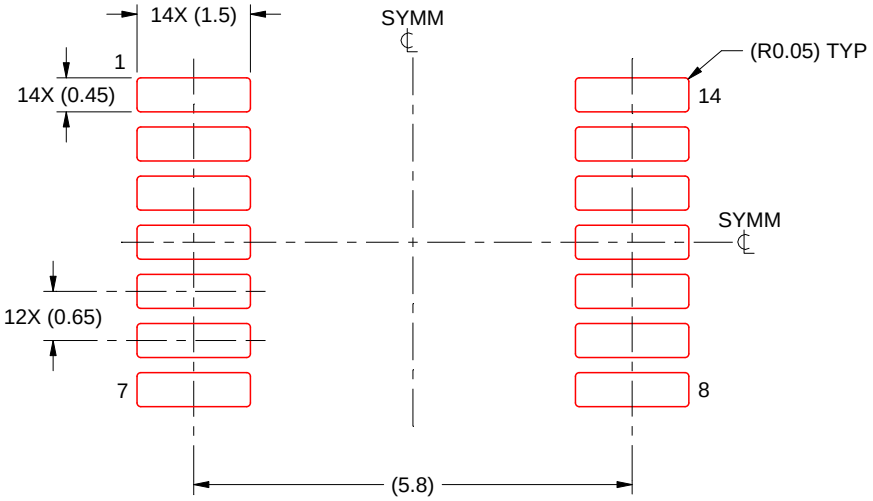

SOLDER PASTE EXAMPLE
BASED ON 0.125 mm THICK STENCIL
SCALE: 10X

4220202/B 12/2023

NOTES: (continued)

8. Laser cutting apertures with trapezoidal walls and rounded corners may offer better paste release. IPC-7525 may have alternate design recommendations.
9. Board assembly site may have different recommendations for stencil design.

IMPORTANT NOTICE AND DISCLAIMER

TI PROVIDES TECHNICAL AND RELIABILITY DATA (INCLUDING DATA SHEETS), DESIGN RESOURCES (INCLUDING REFERENCE DESIGNS), APPLICATION OR OTHER DESIGN ADVICE, WEB TOOLS, SAFETY INFORMATION, AND OTHER RESOURCES “AS IS” AND WITH ALL FAULTS, AND DISCLAIMS ALL WARRANTIES, EXPRESS AND IMPLIED, INCLUDING WITHOUT LIMITATION ANY IMPLIED WARRANTIES OF MERCHANTABILITY, FITNESS FOR A PARTICULAR PURPOSE OR NON-INFRINGEMENT OF THIRD PARTY INTELLECTUAL PROPERTY RIGHTS.

These resources are intended for skilled developers designing with TI products. You are solely responsible for (1) selecting the appropriate TI products for your application, (2) designing, validating and testing your application, and (3) ensuring your application meets applicable standards, and any other safety, security, regulatory or other requirements.

These resources are subject to change without notice. TI grants you permission to use these resources only for development of an application that uses the TI products described in the resource. Other reproduction and display of these resources is prohibited. No license is granted to any other TI intellectual property right or to any third party intellectual property right. TI disclaims responsibility for, and you will fully indemnify TI and its representatives against, any claims, damages, costs, losses, and liabilities arising out of your use of these resources.

TI’s products are provided subject to TI’s Terms of Sale or other applicable terms available either on ti.com or provided in conjunction with such TI products. TI’s provision of these resources does not expand or otherwise alter TI’s applicable warranties or warranty disclaimers for TI products.

TI objects to and rejects any additional or different terms you may have proposed.

Mailing Address: Texas Instruments, Post Office Box 655303, Dallas, Texas 75265
Copyright © 2024, Texas Instruments Incorporated