TLV340x Family of Nanopower, Open-Drain Output Comparators

1 Features

- Low Supply Current: 470 nA Per Channel
- Input Common-Mode Range Exceeds the Rails: –0.1 V to V_{CC} + 5 V
- Supply Voltage Range: 2.5 V to 16 V
- Reverse Battery Protection Up to 18 V
- Open-Drain CMOS Output Stage
- Specified Temperature Range:
  - Commercial Grade: 0°C to +70°C
  - Industrial Grade: –40°C to +125°C
- Ultra-Small Packaging:
  - 5-Pin SOT-23 (TLV3401)
  - 8-Pin MSOP (TLV3402)
- Universal Op Amp EVM (See *Universal Operational Amplifier Evaluation Module Selection Guide* For More Information)

2 Applications

- Portable Medical Equipment
- Wireless Security Systems
- Remote Control Systems
- Handheld Instruments
- Ultra-Low Power Systems

Supply Current vs Supply Voltage

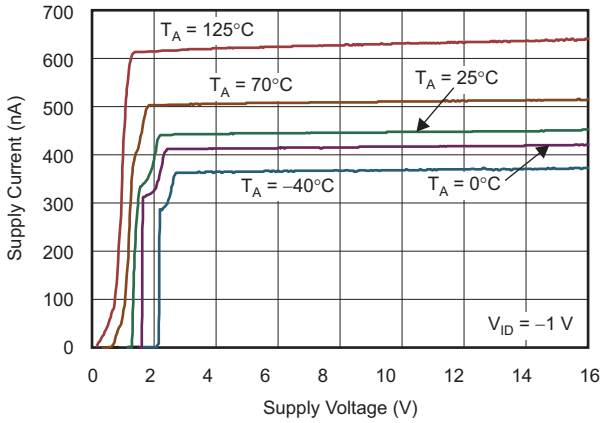

3 Description

The TLV340x is TI's first family of nanopower comparators with only 470 nA per channel supply current, which makes this device ideal for battery-powered and wireless handset applications.

The TLV340x has a minimum operating supply voltage of 2.7 V over the extended industrial temperature range (T_A = –40°C to +125°C), while having an input common-mode range of –0.1 to V_{CC} + 5 V. The low supply current makes it an ideal choice for battery-powered portable applications where quiescent current is the primary concern. Reverse battery protection guards the amplifier from an overcurrent condition due to improper battery installation. For harsh environments, the inputs can be taken 5 V above the positive supply rail without damage to the device.

All members are available in PDIP and SOIC with the single versions in the small SOT-23 package, dual versions in the VSSOP package, and quad versions in the TSSOP package.

Device Information(1)

PART NUMBER	PACKAGE	BODY SIZE (NOM)
TLV3401	SOT-23 (5)	2.90 mm × 1.60 mm
TLV3401, TLV3402	SOIC (8)	4.90 mm × 3.91 mm
TLV3401, TLV3402	PDIP (8)	9.81 mm × 6.35 mm
TLV3402	VSSOP (8)	3.00 mm × 3.00 mm
TLV3404	SOIC (14)	8.65 mm × 3.91 mm
	TSSOP (14)	5.00 mm × 4.40 mm
	PDIP (14)	19.30 mm × 6.35 mm

(1) For all available packages, see the orderable addendum at the end of the data sheet.

High-Side Voltage Sense Circuit

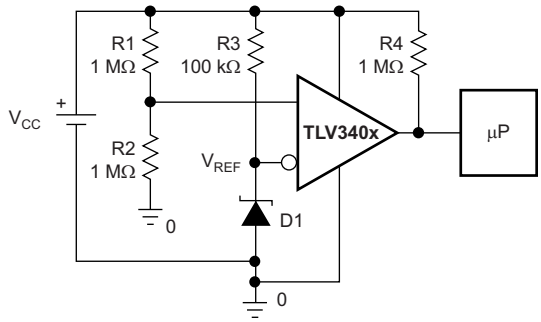

Copyright © 2000, Texas Instruments Incorporated

An IMPORTANT NOTICE at the end of this data sheet addresses availability, warranty, changes, use in safety-critical applications, intellectual property matters and other important disclaimers. PRODUCTION DATA.

Table of Contents

1 Features ... 1
2 Applications ... 1
3 Description ... 1
4 Revision History ... 2
5 Device Comparison Table ... 3
6 Pin Configuration and Functions ... 4
7 Specifications ... 6
7.1 Absolute Maximum Ratings ... 6
7.2 ESD Ratings ... 6
7.3 Recommended Operating Conditions ... 6
7.4 Thermal Information: TLV3401 ... 7
7.5 Thermal Information: TLV3402 ... 7
7.6 Thermal Information: TLV3404 ... 7
7.7 Electrical Characteristics ... 8
7.8 Switching Characteristics ... 8
7.9 Typical Characteristics ... 9
8 Detailed Description ... 12
8.1 Overview ... 12
8.2 Functional Block Diagram ... 12
8.3 Feature Description ... 12
8.4 Device Functional Modes ... 12
9 Application and Implementation ... 13
9.1 Application Information ... 13
9.2 Typical Application ... 13
10 Power Supply Recommendations ... 15
11 Layout ... 15
11.1 Layout Guidelines ... 15
11.2 Layout Example ... 15
12 Device and Documentation Support ... 16
12.1 Device Support ... 16
12.2 Documentation Support ... 16
12.3 Related Links ... 16
12.4 Receiving Notification of Documentation Updates 16
12.5 Community Resource ... 17
12.6 Trademarks ... 17
12.7 Electrostatic Discharge Caution ... 17
12.8 Glossary ... 17
13 Mechanical, Packaging, and Orderable Information ... 17

4 Revision History

NOTE: Page numbers for previous revisions may differ from page numbers in the current version.

Changes from Revision A (November 2000) to Revision B	Page
• Added *ESD Rating* table, *Feature Description* section, *Device Functional Modes*, *Application and Implementation* section, *Power Supply Recommendations* section, *Layout* section, *Device and Documentation Support* section, and *Mechanical, Packaging, and Orderable Information* section;	1
• Deleted *Available Options* tables; refer to *Package Option Addendum* at the end of this data sheet	3
• Deleted *Dissipation Ratings* table	6

Copyright © 2000–2017, Texas Instruments Incorporated

5 Device Comparison Table

DEVICE (1)	V_{CC} (V)	V_{IO} (µV)	I_{CC}/Ch (µA)	I_{IB} (pA)	t_{PLH} (µs)	t_{PHL} (µs)	t_F (µs)	t_R (µs)	RAIL-TO-RAIL	OUTPUT STAGE
TLV340x	2.5 to 16	250	0.47	80	55	30	5	—	Input	OD
TLV370x	2.5 to 16	250	0.47	80	25	30	5	3.5	Input	PP
TLC3702/4	3 to 16	1200	9	5	1.1	0.65	0.5	0.125	—	PP
TLC393/339	3 to 16	1400	11	5	1.1	0.55	0.22	—	—	OD
TLC372/4	3 to 16	1000	75	5	0.65	0.65	—	—	—	OD

(1) All specifications are typical values measured at 5 V.

Copyright © 2000–2017, Texas Instruments Incorporated

6 Pin Configuration and Functions

TLV3401: DBV Package
5-Pin SOT-23
Top View

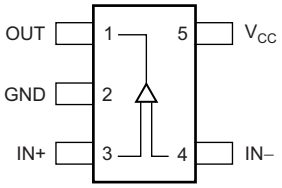

TLV3401: D and P Packages
8-Pin SOIC and VSSOP
Top View

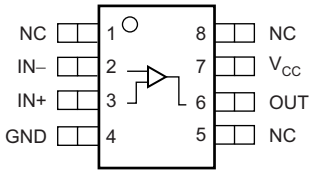

Pin Functions: TLV3401

PIN			I/O	DESCRIPTION
NAME	TLV3401			
	SOT-23	SOIC, PDIP		
GND	2	4	—	Ground
IN–	4	2	I	Negative (inverting) input
IN+	3	3	I	Positive (noninverting) input
NC	—	1, 5, 8	—	No internal connection (can be left floating)
OUT	1	6	O	Output
V_{CC}	5	7	—	Positive power supply

TLV3402: D, DGK, and P Packages
8-PIN SOIC, PDIP, and VSSOP
Top View

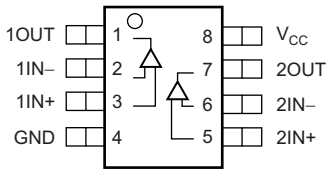

Pin Functions: TLV3402

PIN		I/O	DESCRIPTION
NAME	TLV3402		
	SOIC, PDIP, VSSOP		
GND	4	—	Ground
1IN–	2	I	Inverting input, channel 1
2IN–	6	I	Inverting input, channel 2
1IN+	3	I	Noninverting input, channel 1
2IN+	5	I	Noninverting input, channel 2
1OUT	1	O	Output, channel 1
2OUT	7	O	Output, channel 2
V_{CC}	8	—	Positive power supply

Copyright © 2000–2017, Texas Instruments Incorporated

TLV3404: D, N, and PW Packages
14-PIN SOIC, PDIP, TSSOP
Top View

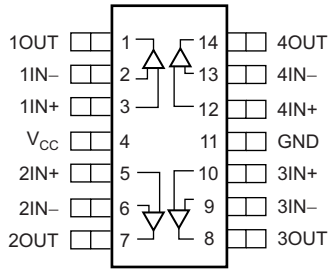

Pin Functions: TLV3404

PIN		I/O	DESCRIPTION
NAME	TLV3404 SOIC, PDIP, TSSOP		
GND	11	—	Ground
1IN–	2	I	Inverting input, channel 1
2IN–	6	I	Inverting input, channel 2
3IN–	9	I	Inverting input, channel 3
4IN–	13	I	Inverting input, channel 4
1IN+	3	I	Noninverting input, channel 1
2IN+	5	I	Noninverting input, channel 2
3IN+	10	I	Noninverting input, channel 3
4IN+	12	I	Noninverting input, channel 4
1OUT	1	O	Output, channel 1
2OUT	7	O	Output, channel 2
3OUT	8	O	Output, channel 3
4OUT	14	O	Output, channel 4
V_{CC}	4	—	Positive power supply

Copyright © 2000–2017, Texas Instruments Incorporated

7 Specifications

7.1 Absolute Maximum Ratings

over operating free-air temperature range (unless otherwise noted)[1]

			MIN	MAX	UNIT
Voltage	Supply, V_{CC}[2]			17	V
	Differential input, V_{ID}		–20	20	
	Input, V_I[2][3]		0	V_{CC} + 5	
Current	Input, I_I		–10	10	mA
	Output, I_O		–10	10	
Temperature	Operating, T_A	C-suffix versions	0	70	°C
		I-suffix versions	–40	125	
	Junction, T_J			150	
	Storage, T_{stg}		–65	150	

(1) Stresses beyond those listed under *Absolute Maximum Ratings* may cause permanent damage to the device. These are stress ratings only, which do not imply functional operation of the device at these or any other conditions beyond those indicated under *Recommended Operating Conditions*. Exposure to absolute-maximum-rated conditions for extended periods may affect device reliability.
(2) All voltage values, except differential voltages, are with respect to GND.
(3) Input voltage range is limited to 20 V or V_{CC} + 5 V, whichever is smaller.

7.2 ESD Ratings

		VALUE	UNIT
$V_{(ESD)}$ Electrostatic discharge	Human-body model (HBM), per ANSI/ESDA/JEDEC JS-001[1]	±2000	V
	Charged-device model (CDM), per JEDEC specification JESD22-C101[2]	±1500	
	Machine model (MM)	±100	

(1) JEDEC document JEP155 states that 500-V HBM allows safe manufacturing with a standard ESD control process.
(2) JEDEC document JEP157 states that 250-V CDM allows safe manufacturing with a standard ESD control process.

7.3 Recommended Operating Conditions

			MIN	MAX	UNIT
Supply voltage, V_{CC}	Single supply	C-suffix versions	2.5	16	V
		I-suffix versions	2.7	16	
	Split supply	C-suffix versions	±1.25	±8	
		I-suffix versions	±1.35	±8	
Common-mode input voltage, V_{ICR}			–0.1	V_{CC} + 5	V
Operating free-air temperature, T_A	C-suffix versions		0	70	°C
	I-suffix versions		–40	125	

Copyright © 2000–2017, Texas Instruments Incorporated

7.4 Thermal Information: TLV3401

THERMAL METRIC[1]		TLV3401			UNIT
		D (SOIC)	DBV (SOT-23)	P (PDIP)	
		8 PINS	5 PINS	8 PINS	
$R_{\theta JA}$	Junction-to-ambient thermal resistance	201.9	237.8	58.5	°C/W
$R_{\theta JC(top)}$	Junction-to-case (top) thermal resistance	92.5	108.7	48.3	°C/W
$R_{\theta JB}$	Junction-to-board thermal resistance	123.3	64.1	35.6	°C/W
ψ_{JT}	Junction-to-top characterization parameter	23	12.1	25.9	°C/W
ψ_{JB}	Junction-to-board characterization parameter	212.6	63.3	35.5	°C/W
$R_{\theta JC(bot)}$	Junction-to-case (bottom) thermal resistance	—	—	—	°C/W

(1) For more information about traditional and new thermal metrics, see the application report, *Semiconductor and IC Package Thermal Metrics*

7.5 Thermal Information: TLV3402

THERMAL METRIC[1]		TLV3402			UNIT
		D (SOIC)	DGK (VSSOP)	P (PDIP)	
		8 PINS	8 PINS	8 PINS	
$R_{\theta JA}$	Junction-to-ambient thermal resistance	201.9	186.8	58.5	°C/W
$R_{\theta JC(top)}$	Junction-to-case (top) thermal resistance	92.5	77.5	48.3	°C/W
$R_{\theta JB}$	Junction-to-board thermal resistance	123.3	107.8	35.6	°C/W
ψ_{JT}	Junction-to-top characterization parameter	23	15.7	25.9	°C/W
ψ_{JB}	Junction-to-board characterization parameter	212.6	106.2	35.5	°C/W
$R_{\theta JC(bot)}$	Junction-to-case (bottom) thermal resistance	—	—	—	°C/W

(1) For more information about traditional and new thermal metrics, see the application report, *Semiconductor and IC Package Thermal Metrics*

7.6 Thermal Information: TLV3404

THERMAL METRIC[1]		TLV3404			UNIT
		D (SOIC)	N (PDIP)	PW (TSSOP)	
		14 PINS	14 PINS	14 PINS	
$R_{\theta JA}$	Junction-to-ambient thermal resistance	83.8	65.5	120.8	°C/W
$R_{\theta JC(top)}$	Junction-to-case (top) thermal resistance	70.7	20.0	34.3	°C/W
$R_{\theta JB}$	Junction-to-board thermal resistance	59.5	25.9	62.8	°C/W
ψ_{JT}	Junction-to-top characterization parameter	11.6	1.9	1	°C/W
ψ_{JB}	Junction-to-board characterization parameter	37.7	25.3	56.5	°C/W
$R_{\theta JC(bot)}$	Junction-to-case (bottom) thermal resistance	—	—	—	°C/W

(1) For more information about traditional and new thermal metrics, see the application report, *Semiconductor and IC Package Thermal Metrics*

Copyright © 2000–2017, Texas Instruments Incorporated

7.7 Electrical Characteristics

At specified free-air temperature and V_{CC} = 2.7 V, 5 V, 15 V, unless otherwise noted.

PARAMETER		TEST CONDITIONS		T_A (1)	MIN	TYP	MAX	UNIT
DC PERFORMANCE								
V_{IO}	Input offset voltage	$V_{IC} = V_{CC}/2$, R_S = 50 Ω, R_P = 1 MΩ		T_A = 25°C		250	3600	µV
				Full range			4400	
α_{VIO}	Offset voltage drift	$V_{IC} = V_{CC}/2$, R_S = 50 Ω, R_P = 1 MΩ		T_A = 25°C		3		µV/°C
CMRR	Common-mode rejection ratio	V_{IC} = 0 V to 2.7 V, R_S = 50 Ω		T_A = 25°C	55	72		dB
				Full range	50			
		V_{IC} = 0 V to 5 V, R_S = 50 Ω		T_A = 25°C	60	76		
				Full range	55			
		V_{IC} = 0 V to 15 V, R_S = 50 Ω		T_A = 25°C	65	88		
				Full range	60			
A_{VD}	Large-signal differential voltage amplification	R_P = 1 MΩ		T_A = 25°C		1000		V/mV
INPUT/OUTPUT CHARACTERISTICS								
I_{IO}	Input offset current	$V_{IC} = V_{CC}/2$, R_S = 50 Ω, R_P = 1 MΩ		T_A = 25°C		20	100	pA
				Full range			1000	
I_{IB}	Input bias current	$V_{IC} = V_{CC}/2$, R_S = 50 Ω, R_P = 1 MΩ		T_A = 25°C		80	250	pA
				Full range			1500	
$r_{i(d)}$	Differential input resistance			T_A = 25°C		300		MΩ
I_{OZ}	High-impedance output leakage current	$V_{IC} = V_{CC}/2$, $V_O = V_{CC}$, V_{ID} = 1 V		T_A = 25°C		50		pA
V_{OL}	Low-level output voltage	$V_{IC} = V_{CC}/2$, I_{OL} = 2 µA, V_{ID} = –1 V		T_A = 25°C		8		mV
		$V_{IC} = V_{CC}/2$, I_{OL} = 50 µA, V_{ID} = –1 V		T_A = 25°C		80	200	
				Full range			300	
POWER SUPPLY								
I_{CC}	Supply current (per channel)	R_P = no pullup	Output state low	T_A = 25°C		470	550	nA
				Full range			750	
			Output state high	T_A = 25°C		560	640	
				Full range			950	
PSRR	Power-supply rejection ratio	$V_{IC} = V_{CC}/2$, no load	V_{CC} = 2.7 V to 5 V	T_A = 25°C	75	100		dB
				Full range	70			
			V_{CC} = 5 V to 15 V	T_A = 25°C	85	105		
				Full range	80			

(1) Full range is 0°C to 70°C for the C-suffix and –40°C to 125°C for the I-suffix. If not specified, full range is –40°C to 125°C.

7.8 Switching Characteristics

At T_A = 25°C, recommended operating conditions, and V_{CC} = 2.7 V, 5 V, 15 V, unless otherwise noted.

PARAMETER		TEST CONDITIONS		T_A	MIN	TYP	MAX	UNIT
$t_{(PLH)}$	Propagation delay time, low-to-high-level output	f = 10 kHz, V_{STEP} = 1 V, R_P = 1 MΩ, C_L = 10 pF	Overdrive = 2 mV	T_A = 25°C		175		µs
			Overdrive = 10 mV	T_A = 25°C		80		
			Overdrive = 50 mV	T_A = 25°C		55		
$t_{(PHL)}$	Propagation delay time, high-to-low-level output	f = 10 kHz, V_{STEP} = 1 V, R_P = 1 MΩ, C_L = 10 pF	Overdrive = 2 mV	T_A = 25°C		300		µs
			Overdrive = 10 mV	T_A = 25°C		60		
			Overdrive = 50 mV	T_A = 25°C		30		
t_F	Fall time	R_P = 1 MΩ, C_L = 10 pF		T_A = 25°C		5		µs

Copyright © 2000–2017, Texas Instruments Incorporated

7.9 Typical Characteristics

Table 1. Table of Graphs

DESCRIPTION			FIGURE NO.
	Input bias/offset current	vs Free-air temperature	Figure 1
	Open collector leakage current	vs Free-air temperature	Figure 2
V_{OL}	Low-level output voltage	vs Low-level output current	Figure 3, Figure 4, Figure 5
I_{DD}	Supply current	vs Supply voltage	Figure 6
I_{DD}	Supply current	vs Free-air temperature	Figure 7
	Low-to-high level output response for various input overdrives		Figure 8, Figure 9, Figure 10
	High-to-low level output response for various input overdrives		Figure 11, Figure 12, Figure 13
	Output fall time	vs Supply voltage	Figure 14

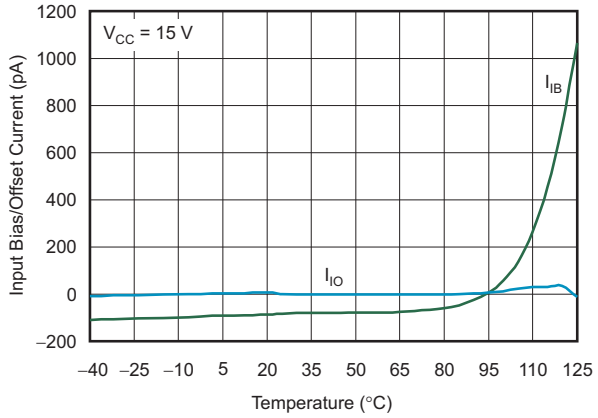

Figure 1. Input Bias/Offset Current vs Free-Air Temperature

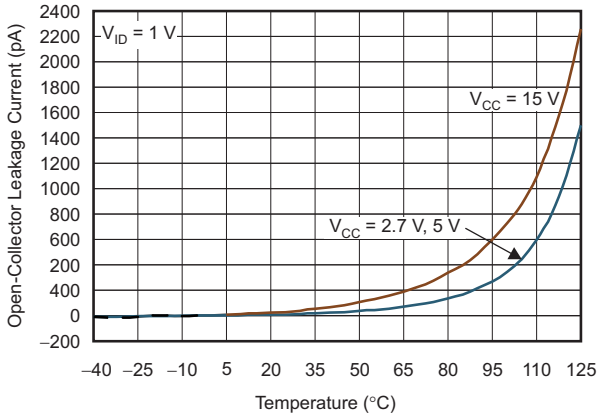

Figure 2. Open-Collector Leakage Current vs Free-Air Temperature

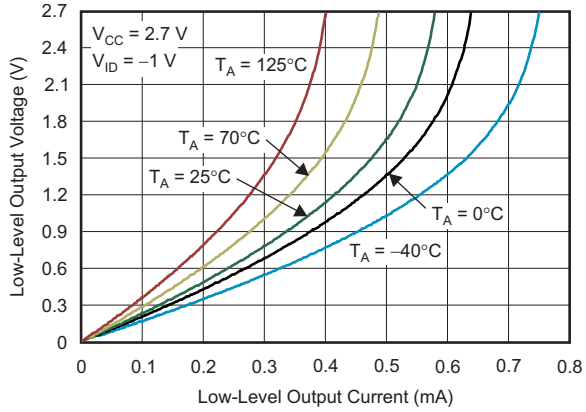

Figure 3. Low-Level Output Voltage vs Low-Level Output Current

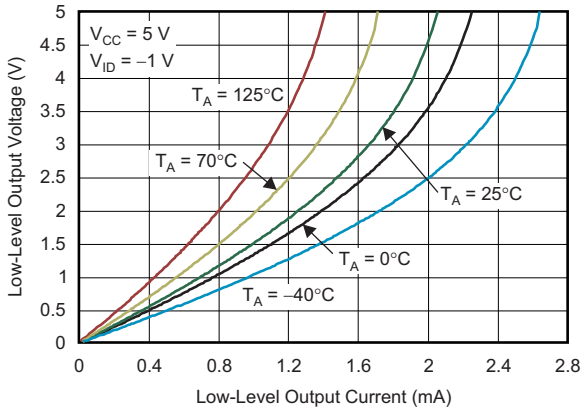

Figure 4. Low-Level Output Voltage vs Low-Level Output Current

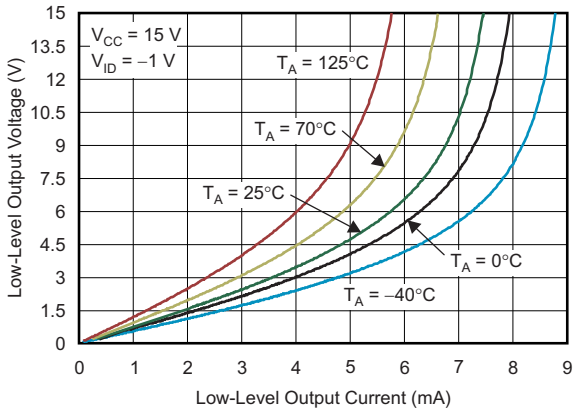

Figure 5. Low-Level Output Voltage vs Low-Level Output Current

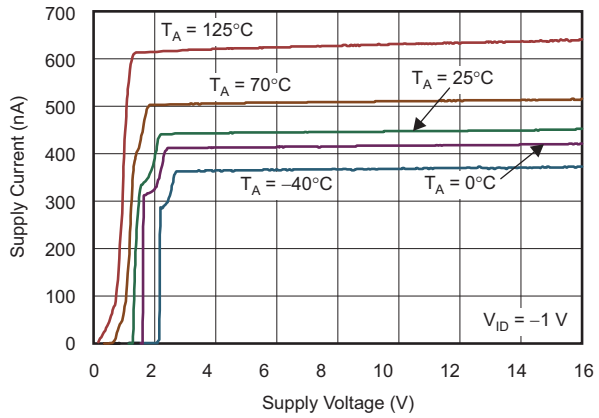

Figure 6. Supply Current vs Supply Voltage

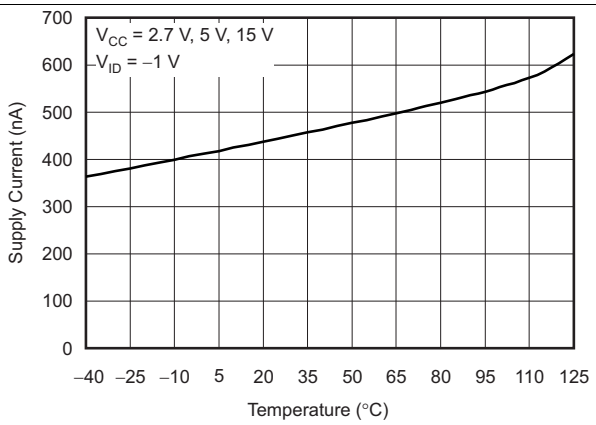

Figure 7. Supply Current vs Free-Air Temperature

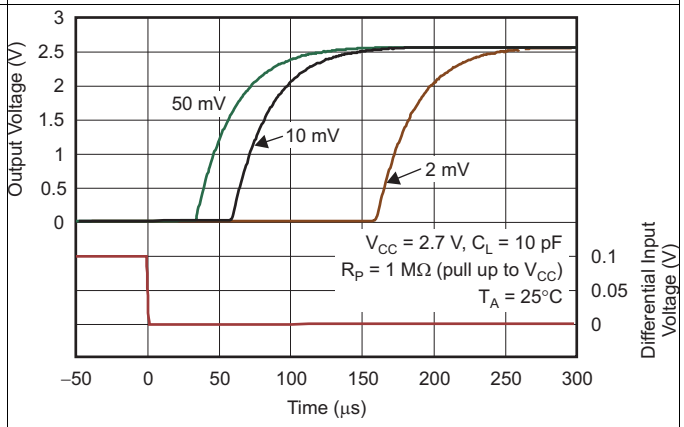

Figure 8. Low-to-High Level Output Response for Various Input Overdrives

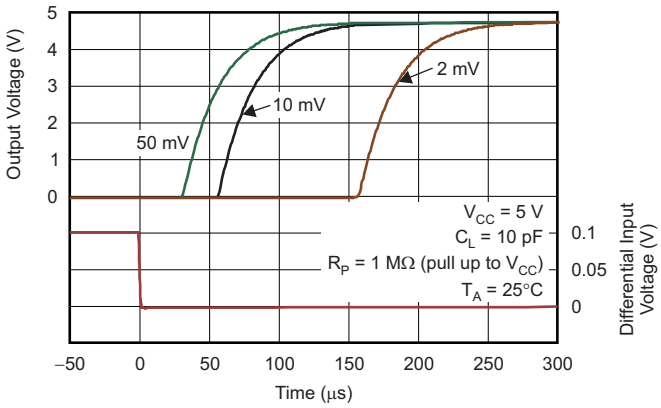

Figure 9. Low-to-High Level Output Response for Various Input Overdrives

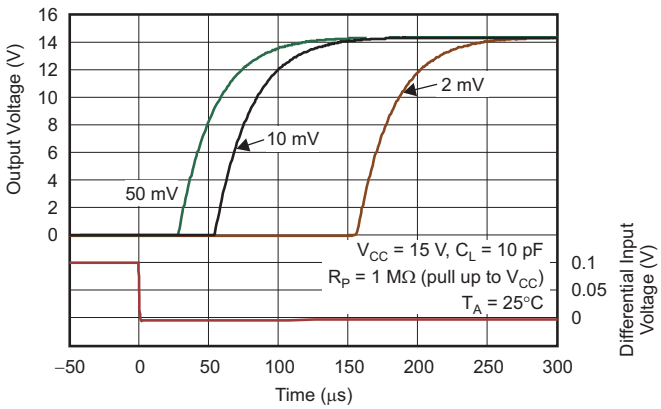

Figure 10. Low-to-High Level Output Response for Various Input Overdrives

Copyright © 2000–2017, Texas Instruments Incorporated

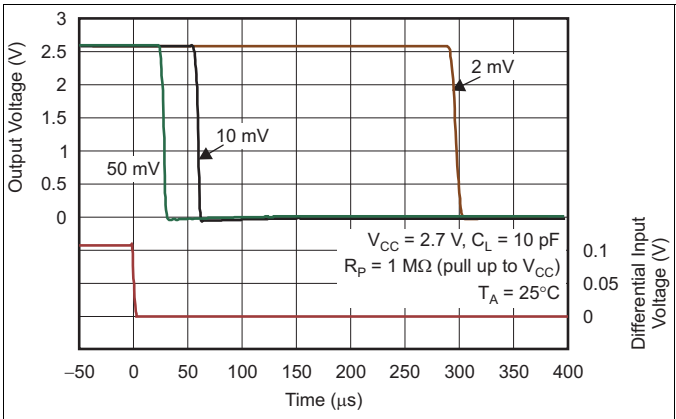

Figure 11. High-to-Low Level Output Response for Various Input Overdrives

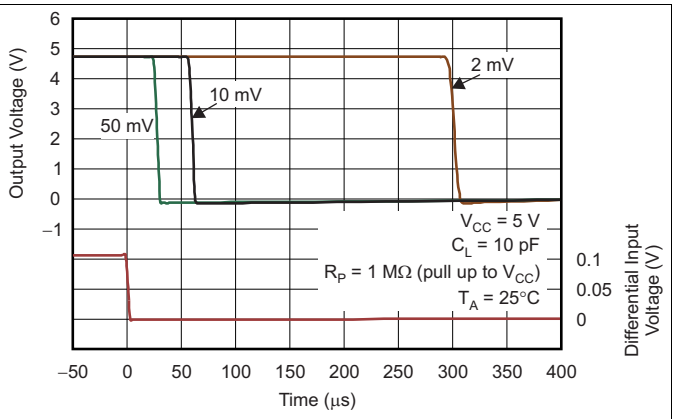

Figure 12. High-to-Low Level Output Response for Various Input Overdrives

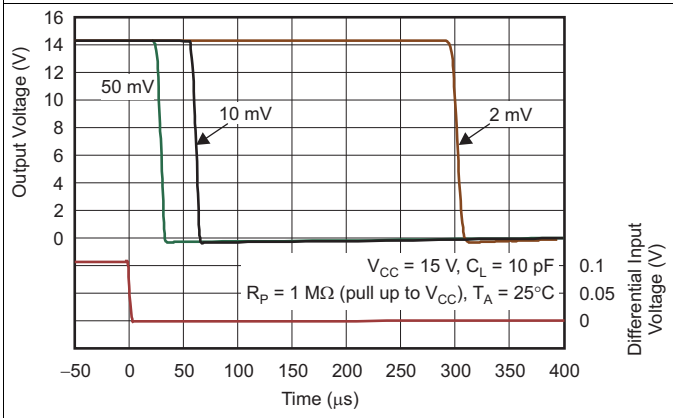

Figure 13. High-to-Low Level Output Response for Various Input Overdrives

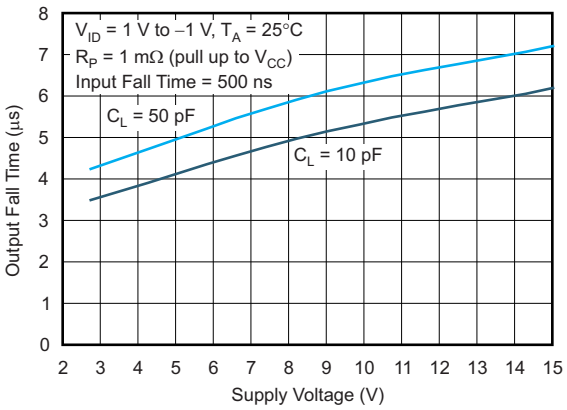

Figure 14. Output Fall Time vs Supply Voltage

8 Detailed Description

8.1 Overview

The TLV340x is a family of nanopower comparators drawing only 470 nA per channel supply current. Having a minimum operating supply voltage of 2.7 V over the extended industrial temperature range (T_A = –40°C to +125°C), while having an input common-mode range of –0.1 to V_{CC} + 5 V makes this device ideal for battery-powered and wireless handset applications.

8.2 Functional Block Diagram

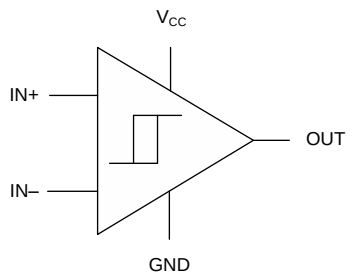

Copyright © 2016, Texas Instruments Incorporated

8.3 Feature Description

8.3.1 Operating Voltage

The TLV340x comparators are specified for use on a single supply from 2.5 V to 16 V (or a dual supply from ±1.25 V to ±16 V) over a temperature range of −40°C to +125°C.

8.3.2 Setting the Threshold

Using a low-power, stable reference is important when setting the transition point for the TLV340x devices. The REF3312, as shown in Figure 15, provides a 1.25-V reference voltage with low drift and only 3.9 µA of quiescent current.

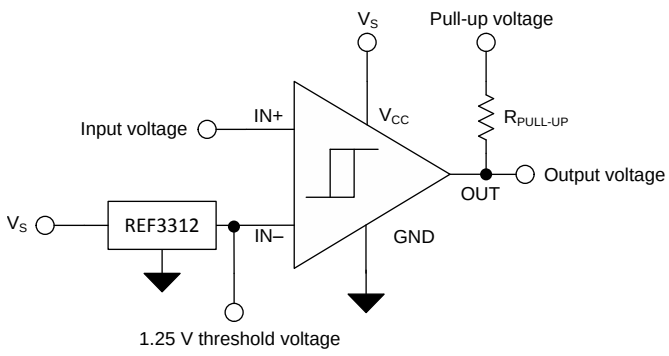

Copyright © 2016, Texas Instruments Incorporated

Figure 15. Setting the Threshold

8.4 Device Functional Modes

The TLV340x has a single functional mode and is operational when the power supply voltage applied ranges from 2.5 V (±1.25 V) to 16 V (±8 V).

Copyright © 2000–2017, Texas Instruments Incorporated

9 Application and Implementation

NOTE

Information in the following applications sections is not part of the TI component specification, and TI does not warrant its accuracy or completeness. TI's customers are responsible for determining suitability of components for their purposes. Customers should validate and test their design implementation to confirm system functionality.

9.1 Application Information

Many applications require the detection of a signal (voltage or current) that exceeds a particular threshold voltage or current. Using a comparator to make that threshold detection is the easiest, lowest power and highest speed way to make a threshold detection.

9.2 Typical Application

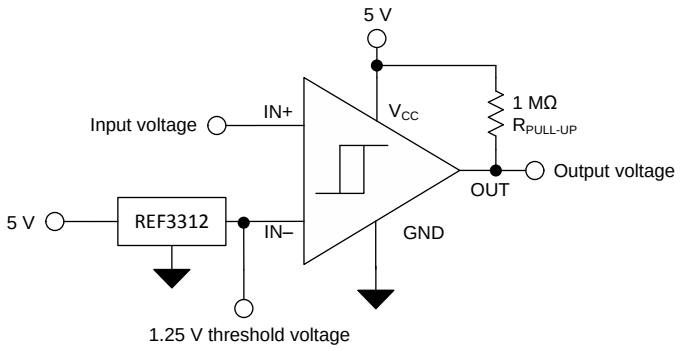

Copyright © 2016, Texas Instruments Incorporated

Figure 16. 1.25-V Threshold Detector

9.2.1 Design Requirements

- Detect when a signal is above or below 1.25 V
- Operate from a single 5-V power supply
- Rail-to-rail input voltage range from 0 to 5 V
- Rail-to-rail output voltage range from 0 to 5 V

9.2.2 Detailed Design Procedure

The input voltage range in the circuit illustrated in Figure 16 is limited only by the power supply applied to the TV3401. In this example with the selection of a 5-V, single-supply power supply, the input voltage range is limited to 0 to V_S + 5 V, or 0 to 10 V. The threshold voltage of 1.25 V can de derived in a variety of ways. As the TLV3401 is a very low-power device, it is desirable to also use very low power to create the threshold voltage. The REF3312 series voltage reference is selected for its stable output voltage of 1.25 V and its low power consumption of only 3.9 µA. The TLV3401 is an open-drain output comparator, requiring a pullup resistor from output to the power supply. Proper selection of the pullup resistor value requires maximizing the output voltage swing while at the same time minimizing power dissipated in the resistor when the output voltage is low. Too small of a pullup resistor can result in too much power dissipation, while too large of a pullup resistor can result in slower response times. The TLV3401 is fully specified with a 1-MΩ pullup resistor and using a 1-MΩ pullup resistor results in meeting the performance specifications listed in the *Electrical Characteristics*.

Typical Application (continued)

9.2.3 Application Curve

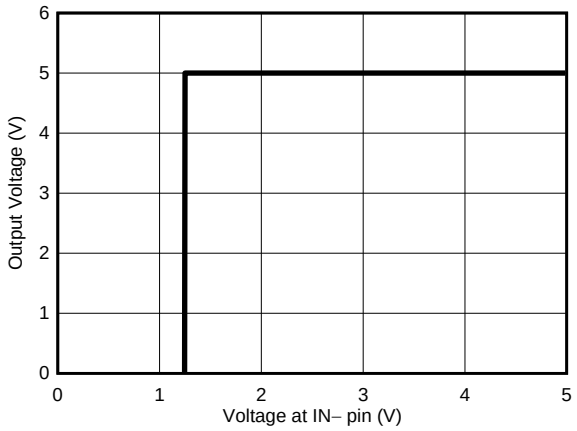

Figure 17. Transfer Function for the Threshold Detector

Copyright © 2000–2017, Texas Instruments Incorporated

10 Power Supply Recommendations

The TLV340x device is specified for operation from 2.5 V to 16 V (±1.25 to ±8 V); many specifications apply from –40°C to +125°C. Parameters that can exhibit significant variance with regard to operating voltage or temperature are presented in *Typical Characteristics*.

11 Layout

11.1 Layout Guidelines

Figure 18 shows the typical connections for the TLV340x. To minimize supply noise, power supplies must be capacitively decoupled by a 0.01-µF ceramic capacitor in parallel with a 10-µF electrolytic capacitor. Comparators are very sensitive to input noise. Proper grounding (the use of a ground plane) helps to maintain the specified performance of the TLV340x family.

For best results, maintain the following layout guidelines:

1. Use a printed-circuit board (PCB) with a good, unbroken low-inductance ground plane.
2. Place a decoupling capacitor (0.1-µF ceramic, surface-mount capacitor) as close as possible to V_{CC}.
3. On the inputs and the output, keep lead lengths as short as possible to avoid unwanted parasitic feedback around the comparator. Keep inputs away from the output.
4. Solder the device directly to the PCB rather than using a socket.
5. For slow-moving input signals, take care to prevent parasitic feedback. A small capacitor (1000 pF or less) placed between the inputs can help eliminate oscillations in the transition region. This capacitor causes some degradation to propagation delay when the impedance is low. The top-side ground plane runs between the output and inputs.
6. The ground pin ground trace runs under the device up to the bypass capacitor, shielding the inputs from the outputs.

11.2 Layout Example

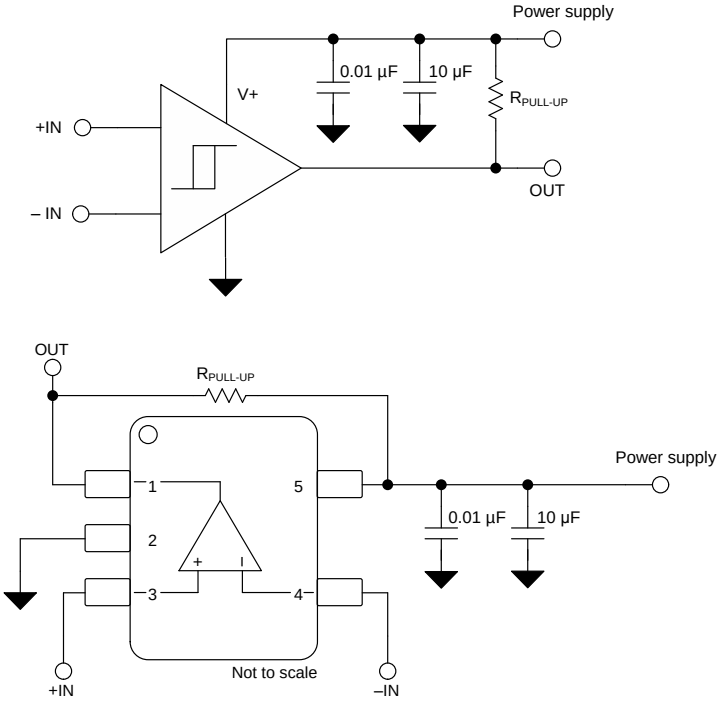

Copyright © 2016, Texas Instruments Incorporated

Figure 18. TLV340x Layout Example

12 Device and Documentation Support

12.1 Device Support

12.1.1 Development Support

12.1.1.1 DIP Adapter EVM

The DIP Adapter EVM tool provides an easy, low-cost way to prototype small surface mount ICs. The evaluation tool these TI packages: D or U (8-pin SOIC), PW (8-pin TSSOP), DGK (8-pin MSOP), DBV (6-pin SOT-23, 5-pin SOT23, and 3-pin SOT-23), DCK (6-pin SC-70 and 5-pin SC-70), and DRL (6-pin SOT-563). The DIP Adapter EVM may also be used with terminal strips or may be wired directly to existing circuits.

12.1.1.2 Universal Op Amp EVM

The Universal Op Amp EVM is a series of general-purpose, blank circuit boards that simplify prototyping circuits for a variety of IC package types. The evaluation module board design allows many different circuits to be constructed easily and quickly. Five models are offered, with each model intended for a specific package type. PDIP, SOIC, MSOP, TSSOP, and SOT-23 packages are all supported.

NOTE

These boards are unpopulated, so users must provide their own ICs. TI recommends requesting several op amp device samples when ordering the Universal Op Amp EVM.

12.2 Documentation Support

12.2.1 Related Documentation

The following documents are relevant for using the TLV340x devices and are recommended for reference. All are available for download at www.ti.com (unless otherwise noted):

- *Universal Op Amp EVM User Guide* (SLOU060)
- *Hardware Pace using Slope Detection* (SLAU511)
- *Bipolar High-voltage Differential Interface for Low-voltage Comparators* (TIDU039)
- *AC-Coupled Single Supply Comparator* (SLAU505)
- *ECG Implementation on the TMS320VC5505 DSP Medical Development Kit* (SPRAB36)
- *REF33xx 3.9-μA, SC70-3, SOT-23-3, and UQFN-8, 30-ppm/ °C Drift Voltage Reference* (SBOS392)

12.3 Related Links

Table 2 lists quick access links. Categories include technical documents, support and community resources, tools and software, and quick access to sample or buy.

Table 2. Related Links

PARTS	PRODUCT FOLDER	SAMPLE & BUY	TECHNICAL DOCUMENTS	TOOLS & SOFTWARE	SUPPORT & COMMUNITY
TLV3401	Click here	Click here	Click here	Click here	Click here
TLV3402	Click here	Click here	Click here	Click here	Click here
TLV3404	Click here	Click here	Click here	Click here	Click here

12.4 Receiving Notification of Documentation Updates

To receive notification of documentation updates, navigate to the device product folder on ti.com. In the upper right corner, click on *Alert me* to register and receive a weekly digest of any product information that has changed. For change details, review the revision history included in any revised document.

Copyright © 2000–2017, Texas Instruments Incorporated

12.5 Community Resource

The following links connect to TI community resources. Linked contents are provided "AS IS" by the respective contributors. They do not constitute TI specifications and do not necessarily reflect TI's views; see TI's Terms of Use.

TI E2E™ Online Community ***TI's Engineer-to-Engineer (E2E) Community.*** Created to foster collaboration among engineers. At e2e.ti.com, you can ask questions, share knowledge, explore ideas and help solve problems with fellow engineers.

Design Support ***TI's Design Support*** Quickly find helpful E2E forums along with design support tools and contact information for technical support.

12.6 Trademarks

E2E is a trademark of Texas Instruments.
All other trademarks are the property of their respective owners.

12.7 Electrostatic Discharge Caution

These devices have limited built-in ESD protection. The leads should be shorted together or the device placed in conductive foam during storage or handling to prevent electrostatic damage to the MOS gates.

12.8 Glossary

SLYZ022 — *TI Glossary*.

This glossary lists and explains terms, acronyms, and definitions.

13 Mechanical, Packaging, and Orderable Information

The following pages include mechanical, packaging, and orderable information. This information is the most current data available for the designated devices. This data is subject to change without notice and revision of this document. For browser-based versions of this data sheet, refer to the left-hand navigation.

PACKAGING INFORMATION

Orderable Device	Status (1)	Package Type	Package Drawing	Pins	Package Qty	Eco Plan (2)	Lead finish/ Ball material (6)	MSL Peak Temp (3)	Op Temp (°C)	Device Marking (4/5)	Samples
TLV3401CD	ACTIVE	SOIC	D	8	75	RoHS & Green	NIPDAU	Level-1-260C-UNLIM	0 to 70	3401C	Samples
TLV3401CDBVR	OBSOLETE	SOT-23	DBV	5		TBD	Call TI	Call TI	0 to 70	VBDC	
TLV3401CDBVT	OBSOLETE	SOT-23	DBV	5		TBD	Call TI	Call TI	0 to 70	VBDC	
TLV3401ID	ACTIVE	SOIC	D	8	75	RoHS & Green	NIPDAU	Level-1-260C-UNLIM	-40 to 125	3401I	Samples
TLV3401IDBVR	ACTIVE	SOT-23	DBV	5	3000	RoHS & Green	NIPDAU	Level-1-260C-UNLIM	-40 to 125	VBDI	Samples
TLV3401IDBVRG4	ACTIVE	SOT-23	DBV	5	3000	TBD	Call TI	Call TI	-40 to 125		Samples
TLV3401IDBVT	OBSOLETE	SOT-23	DBV	5		TBD	Call TI	Call TI	-40 to 125	VBDI	
TLV3401IDR	ACTIVE	SOIC	D	8	2500	RoHS & Green	NIPDAU	Level-1-260C-UNLIM	-40 to 125	3401I	Samples
TLV3401IP	ACTIVE	PDIP	P	8	50	RoHS & Green	NIPDAU	N / A for Pkg Type	-40 to 125	TLV3401I	Samples
TLV3402CD	OBSOLETE	SOIC	D	8		TBD	Call TI	Call TI	0 to 70	3402C	
TLV3402CDGK	OBSOLETE	VSSOP	DGK	8		TBD	Call TI	Call TI	0 to 70	AJJ	
TLV3402CDGKR	OBSOLETE	VSSOP	DGK	8		TBD	Call TI	Call TI	0 to 70	AJJ	
TLV3402CDR	OBSOLETE	SOIC	D	8		TBD	Call TI	Call TI	0 to 70	3402C	
TLV3402ID	OBSOLETE	SOIC	D	8		TBD	Call TI	Call TI	-40 to 125	3402I	
TLV3402IDGK	OBSOLETE	VSSOP	DGK	8		TBD	Call TI	Call TI	-40 to 125	AJK	
TLV3402IDGKR	ACTIVE	VSSOP	DGK	8	2500	RoHS & Green	NIPDAU | NIPDAUAG	Level-1-260C-UNLIM	-40 to 125	AJK	Samples
TLV3402IDR	ACTIVE	SOIC	D	8	2500	RoHS & Green	NIPDAU	Level-1-260C-UNLIM	-40 to 125	3402I	Samples
TLV3402IDRG4	ACTIVE	SOIC	D	8	2500	TBD	Call TI	Call TI	-40 to 125		Samples
TLV3402IP	ACTIVE	PDIP	P	8	50	RoHS & Green	NIPDAU	N / A for Pkg Type	-40 to 125	TLV3402I	Samples
TLV3404CD	OBSOLETE	SOIC	D	14		TBD	Call TI	Call TI	0 to 70	3404C	
TLV3404CDR	OBSOLETE	SOIC	D	14		TBD	Call TI	Call TI	0 to 70	3404C	
TLV3404CPWR	ACTIVE	TSSOP	PW	14	2000	RoHS & Green	NIPDAU	Level-1-260C-UNLIM	0 to 70	3404C	Samples
TLV3404ID	OBSOLETE	SOIC	D	14		TBD	Call TI	Call TI	-40 to 125	3404I	
TLV3404IDR	ACTIVE	SOIC	D	14	2500	RoHS & Green	NIPDAU	Level-1-260C-UNLIM	-40 to 125	3404I	Samples

Orderable Device	Status (1)	Package Type	Package Drawing	Pins	Package Qty	Eco Plan (2)	Lead finish/ Ball material (6)	MSL Peak Temp (3)	Op Temp (°C)	Device Marking (4/5)	Samples
TLV3404IN	ACTIVE	PDIP	N	14	25	RoHS & Green	NIPDAU	N / A for Pkg Type	-40 to 125	TLV3404I	Samples
TLV3404IPW	OBSOLETE	TSSOP	PW	14		TBD	Call TI	Call TI	-40 to 125	3404I	
TLV3404IPWR	ACTIVE	TSSOP	PW	14	2000	RoHS & Green	NIPDAU	Level-1-260C-UNLIM	-40 to 125	3404I	Samples

(1) The marketing status values are defined as follows:
ACTIVE: Product device recommended for new designs.
LIFEBUY: TI has announced that the device will be discontinued, and a lifetime-buy period is in effect.
NRND: Not recommended for new designs. Device is in production to support existing customers, but TI does not recommend using this part in a new design.
PREVIEW: Device has been announced but is not in production. Samples may or may not be available.
OBSOLETE: TI has discontinued the production of the device.

(2) **RoHS:** TI defines "RoHS" to mean semiconductor products that are compliant with the current EU RoHS requirements for all 10 RoHS substances, including the requirement that RoHS substance do not exceed 0.1% by weight in homogeneous materials. Where designed to be soldered at high temperatures, "RoHS" products are suitable for use in specified lead-free processes. TI may reference these types of products as "Pb-Free".
RoHS Exempt: TI defines "RoHS Exempt" to mean products that contain lead but are compliant with EU RoHS pursuant to a specific EU RoHS exemption.
Green: TI defines "Green" to mean the content of Chlorine (Cl) and Bromine (Br) based flame retardants meet JS709B low halogen requirements of <=1000ppm threshold. Antimony trioxide based flame retardants must also meet the <=1000ppm threshold requirement.

(3) MSL, Peak Temp. - The Moisture Sensitivity Level rating according to the JEDEC industry standard classifications, and peak solder temperature.

(4) There may be additional marking, which relates to the logo, the lot trace code information, or the environmental category on the device.

(5) Multiple Device Markings will be inside parentheses. Only one Device Marking contained in parentheses and separated by a "~" will appear on a device. If a line is indented then it is a continuation of the previous line and the two combined represent the entire Device Marking for that device.

(6) Lead finish/Ball material - Orderable Devices may have multiple material finish options. Finish options are separated by a vertical ruled line. Lead finish/Ball material values may wrap to two lines if the finish value exceeds the maximum column width.

Important Information and Disclaimer: The information provided on this page represents TI's knowledge and belief as of the date that it is provided. TI bases its knowledge and belief on information provided by third parties, and makes no representation or warranty as to the accuracy of such information. Efforts are underway to better integrate information from third parties. TI has taken and continues to take reasonable steps to provide representative and accurate information but may not have conducted destructive testing or chemical analysis on incoming materials and chemicals. TI and TI suppliers consider certain information to be proprietary, and thus CAS numbers and other limited information may not be available for release.

In no event shall TI's liability arising out of such information exceed the total purchase price of the TI part(s) at issue in this document sold by TI to Customer on an annual basis.

TAPE AND REEL INFORMATION

REEL DIMENSIONS

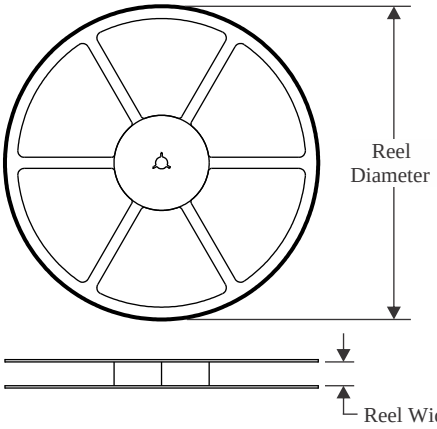

TAPE DIMENSIONS

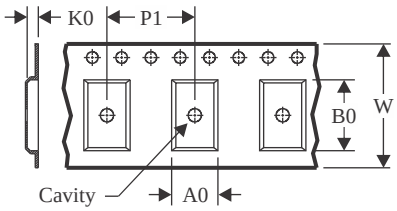

A0	Dimension designed to accommodate the component width
B0	Dimension designed to accommodate the component length
K0	Dimension designed to accommodate the component thickness
W	Overall width of the carrier tape
P1	Pitch between successive cavity centers

QUADRANT ASSIGNMENTS FOR PIN 1 ORIENTATION IN TAPE

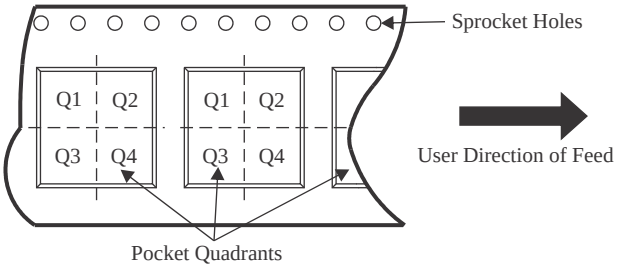

*All dimensions are nominal

Device	Package Type	Package Drawing	Pins	SPQ	Reel Diameter (mm)	Reel Width W1 (mm)	A0 (mm)	B0 (mm)	K0 (mm)	P1 (mm)	W (mm)	Pin1 Quadrant
TLV3401IDBVR	SOT-23	DBV	5	3000	180.0	8.4	3.2	3.2	1.4	4.0	8.0	Q3
TLV3401IDBVR	SOT-23	DBV	5	3000	180.0	8.4	3.2	3.2	1.4	4.0	8.0	Q3
TLV3401IDR	SOIC	D	8	2500	330.0	12.4	6.4	5.2	2.1	8.0	12.0	Q1
TLV3402IDGKR	VSSOP	DGK	8	2500	330.0	12.4	5.3	3.4	1.4	8.0	12.0	Q1
TLV3402IDGKR	VSSOP	DGK	8	2500	330.0	12.4	5.3	3.4	1.4	8.0	12.0	Q1
TLV3402IDR	SOIC	D	8	2500	330.0	12.4	6.4	5.2	2.1	8.0	12.0	Q1
TLV3404CPWR	TSSOP	PW	14	2000	330.0	12.4	6.9	5.6	1.6	8.0	12.0	Q1
TLV3404IDR	SOIC	D	14	2500	330.0	16.4	6.5	9.0	2.1	8.0	16.0	Q1
TLV3404IPWR	TSSOP	PW	14	2000	330.0	12.4	6.9	5.6	1.6	8.0	12.0	Q1
TLV3404IPWR	TSSOP	PW	14	2000	330.0	12.4	6.9	5.6	1.6	8.0	12.0	Q1

TAPE AND REEL BOX DIMENSIONS

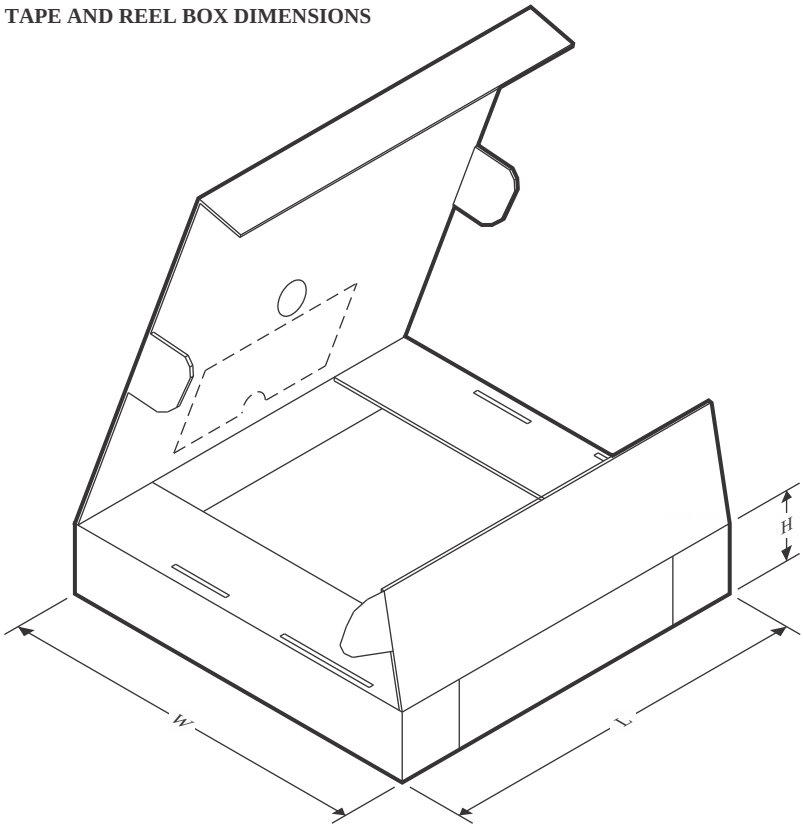

*All dimensions are nominal

Device	Package Type	Package Drawing	Pins	SPQ	Length (mm)	Width (mm)	Height (mm)
TLV3401IDBVR	SOT-23	DBV	5	3000	210.0	185.0	35.0
TLV3401IDBVR	SOT-23	DBV	5	3000	210.0	185.0	35.0
TLV3401IDR	SOIC	D	8	2500	340.5	338.1	20.6
TLV3402IDGKR	VSSOP	DGK	8	2500	358.0	335.0	35.0
TLV3402IDGKR	VSSOP	DGK	8	2500	364.0	364.0	27.0
TLV3402IDR	SOIC	D	8	2500	353.0	353.0	32.0
TLV3404CPWR	TSSOP	PW	14	2000	356.0	356.0	35.0
TLV3404IDR	SOIC	D	14	2500	340.5	336.1	32.0
TLV3404IPWR	TSSOP	PW	14	2000	353.0	353.0	32.0
TLV3404IPWR	TSSOP	PW	14	2000	356.0	356.0	35.0

TUBE

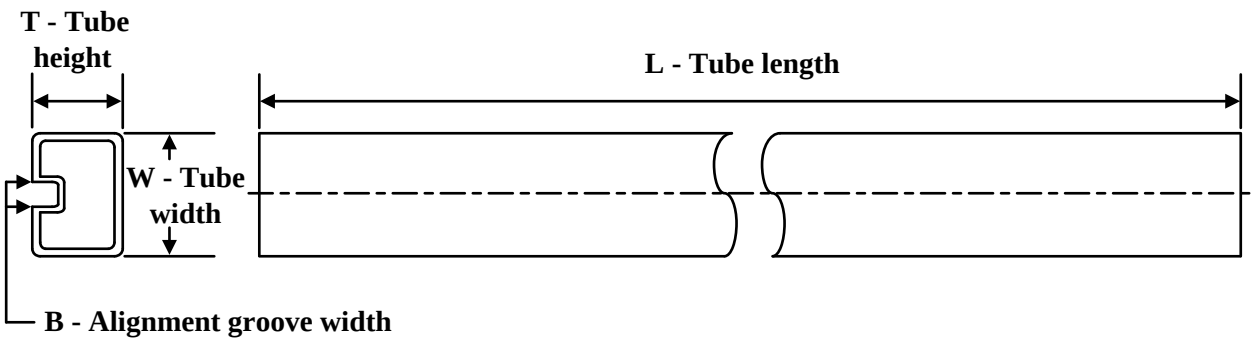

*All dimensions are nominal

Device	Package Name	Package Type	Pins	SPQ	L (mm)	W (mm)	T (µm)	B (mm)
TLV3401CD	D	SOIC	8	75	507	8	3940	4.32
TLV3401ID	D	SOIC	8	75	507	8	3940	4.32
TLV3401IP	P	PDIP	8	50	506	13.97	11230	4.32
TLV3402IP	P	PDIP	8	50	506	13.97	11230	4.32
TLV3404IN	N	PDIP	14	25	506	13.97	11230	4.32

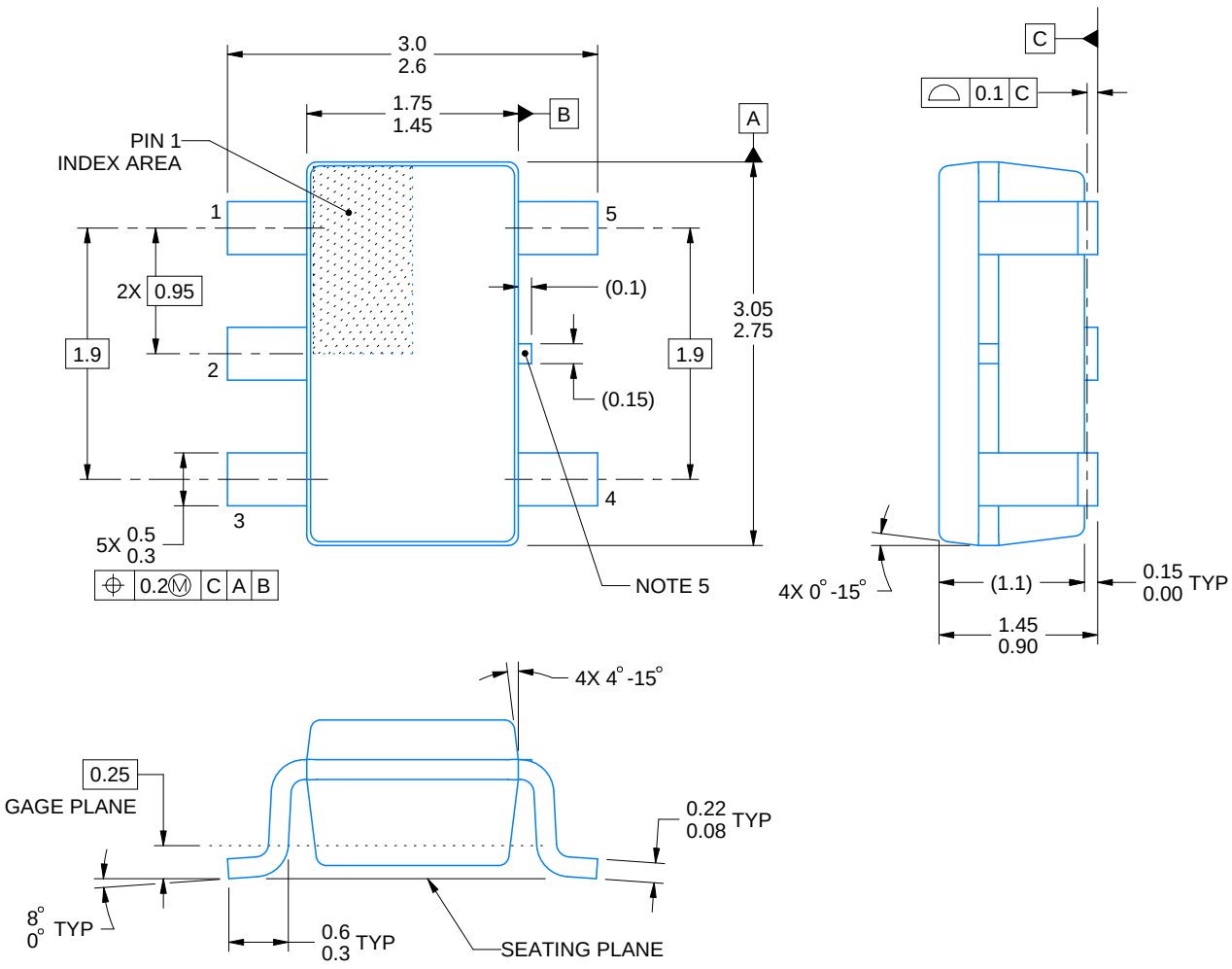

4214839/K 08/2024

NOTES:

1. All linear dimensions are in millimeters. Any dimensions in parenthesis are for reference only. Dimensioning and tolerancing per ASME Y14.5M.
2. This drawing is subject to change without notice.
3. Refernce JEDEC MO-178.
4. Body dimensions do not include mold flash, protrusions, or gate burrs. Mold flash, protrusions, or gate burrs shall not exceed 0.25 mm per side.
5. Support pin may differ or may not be present.

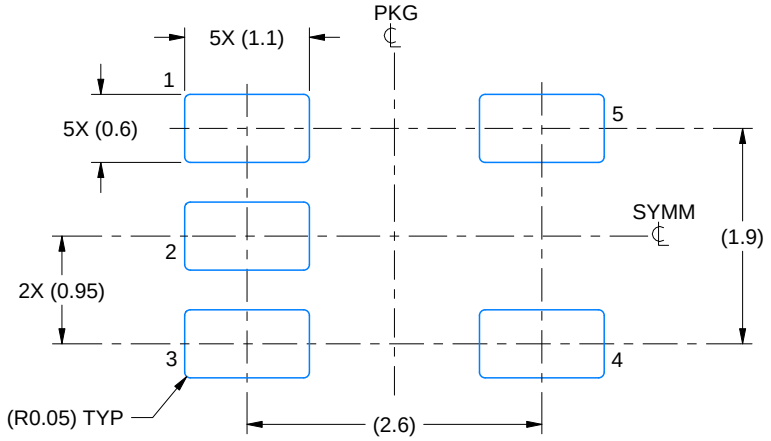

LAND PATTERN EXAMPLE
EXPOSED METAL SHOWN
SCALE:15X

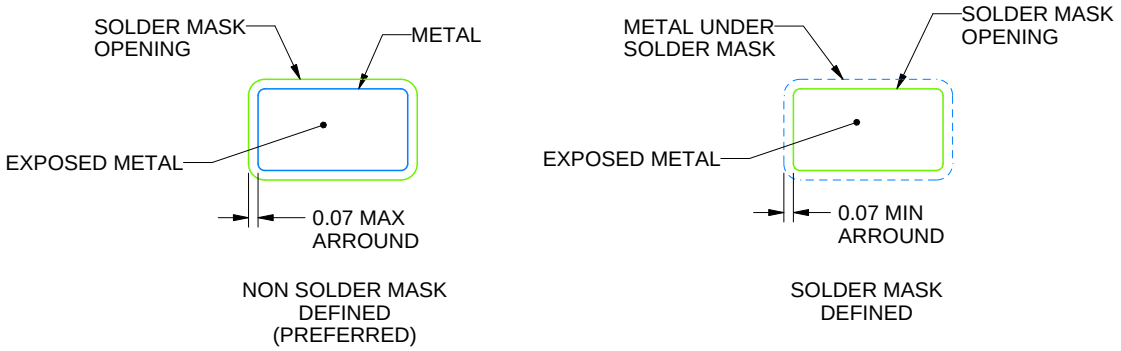

SOLDER MASK DETAILS

4214839/K 08/2024

NOTES: (continued)

6. Publication IPC-7351 may have alternate designs.
7. Solder mask tolerances between and around signal pads can vary based on board fabrication site.

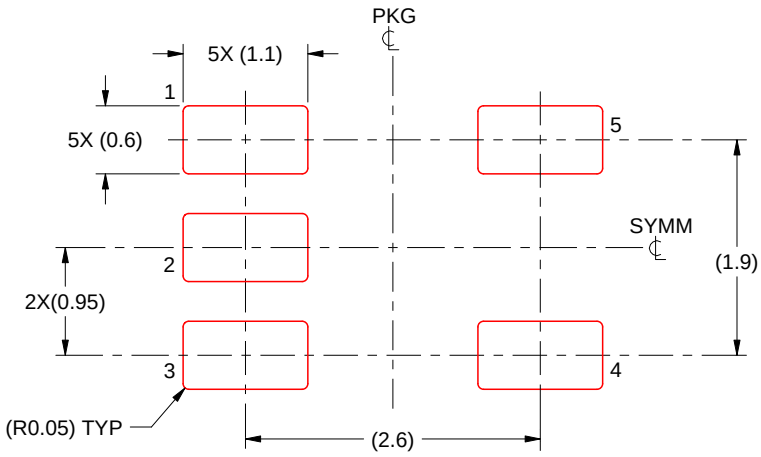

SOLDER PASTE EXAMPLE
BASED ON 0.125 mm THICK STENCIL
SCALE:15X

4214839/K 08/2024

NOTES: (continued)

8. Laser cutting apertures with trapezoidal walls and rounded corners may offer better paste release. IPC-7525 may have alternate design recommendations.
9. Board assembly site may have different recommendations for stencil design.

PACKAGE OUTLINE

DGK0008A

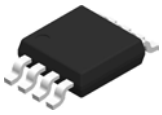

VSSOP - 1.1 mm max height

SMALL OUTLINE PACKAGE

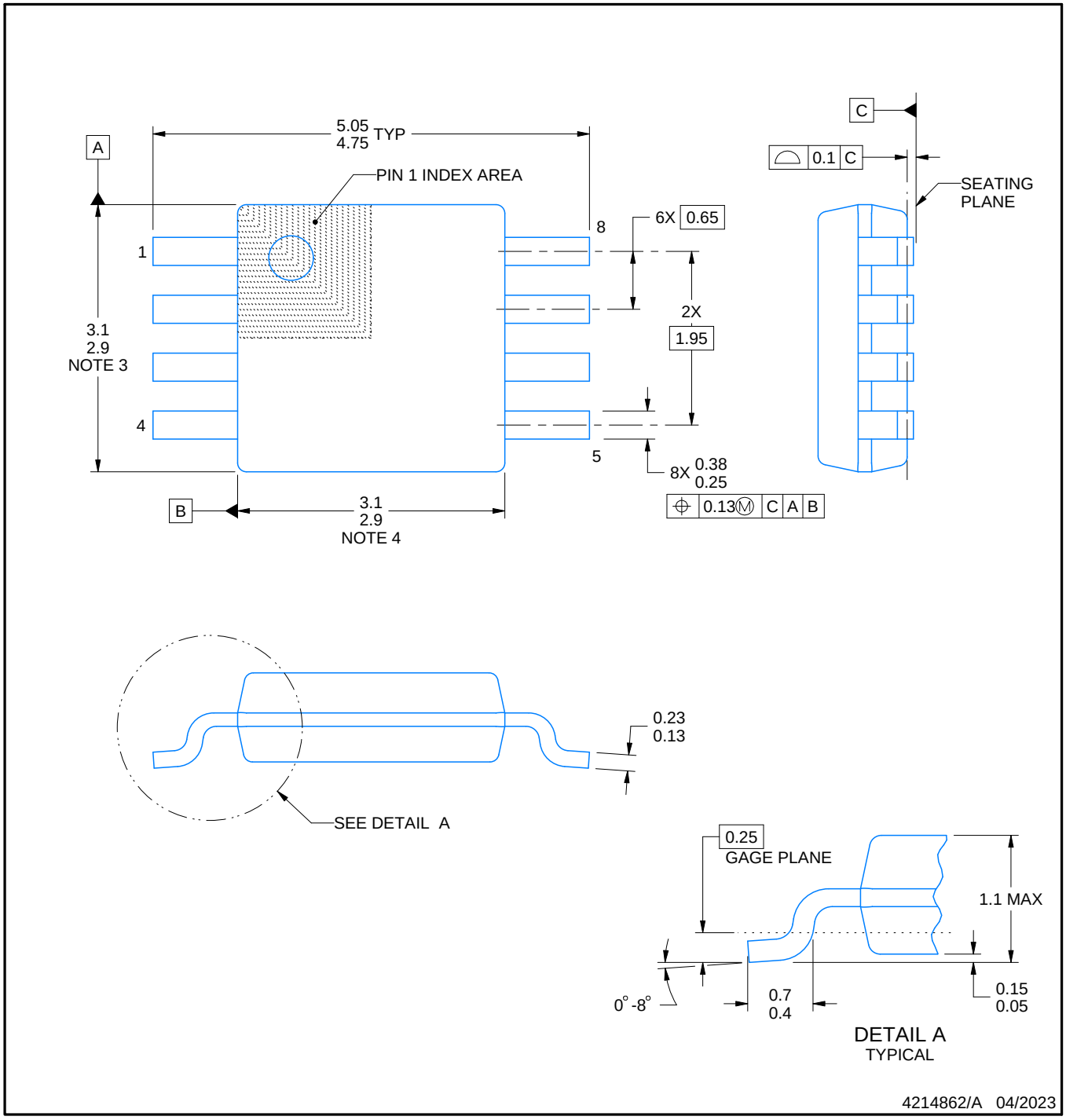

PowerPAD is a trademark of Texas Instruments.

NOTES:

1. All linear dimensions are in millimeters. Any dimensions in parenthesis are for reference only. Dimensioning and tolerancing per ASME Y14.5M.
2. This drawing is subject to change without notice.
3. This dimension does not include mold flash, protrusions, or gate burrs. Mold flash, protrusions, or gate burrs shall not exceed 0.15 mm per side.
4. This dimension does not include interlead flash. Interlead flash shall not exceed 0.25 mm per side.
5. Reference JEDEC registration MO-187.

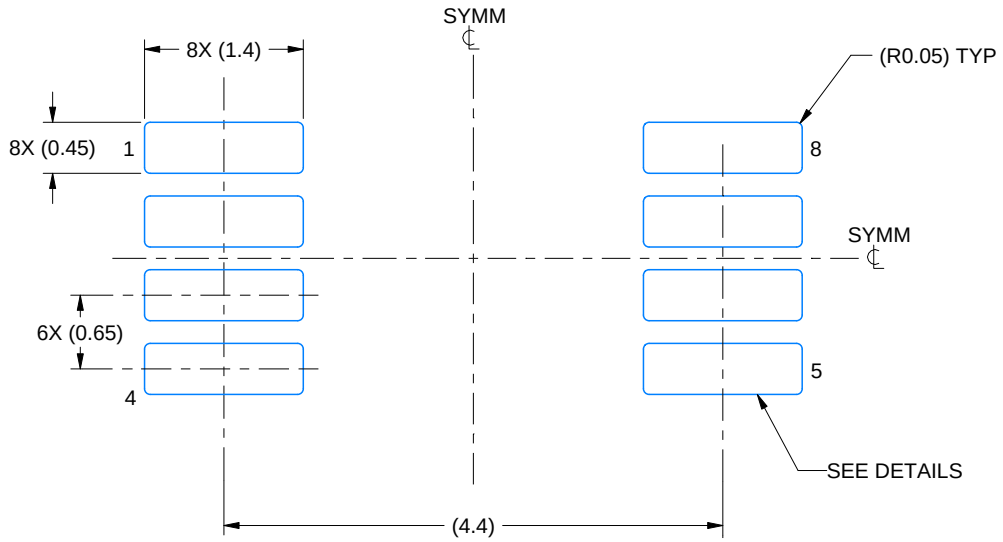

LAND PATTERN EXAMPLE
EXPOSED METAL SHOWN
SCALE: 15X

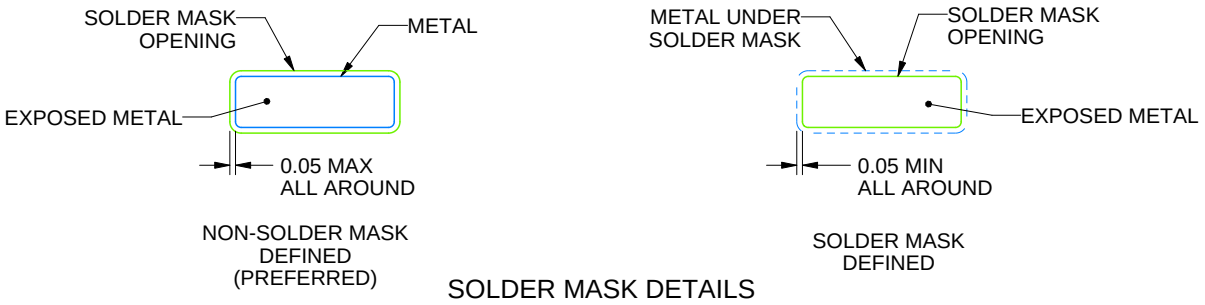

SOLDER MASK DETAILS

4214862/A 04/2023

NOTES: (continued)

6. Publication IPC-7351 may have alternate designs.
7. Solder mask tolerances between and around signal pads can vary based on board fabrication site.
8. Vias are optional depending on application, refer to device data sheet. If any vias are implemented, refer to their locations shown on this view. It is recommended that vias under paste be filled, plugged or tented.
9. Size of metal pad may vary due to creepage requirement.

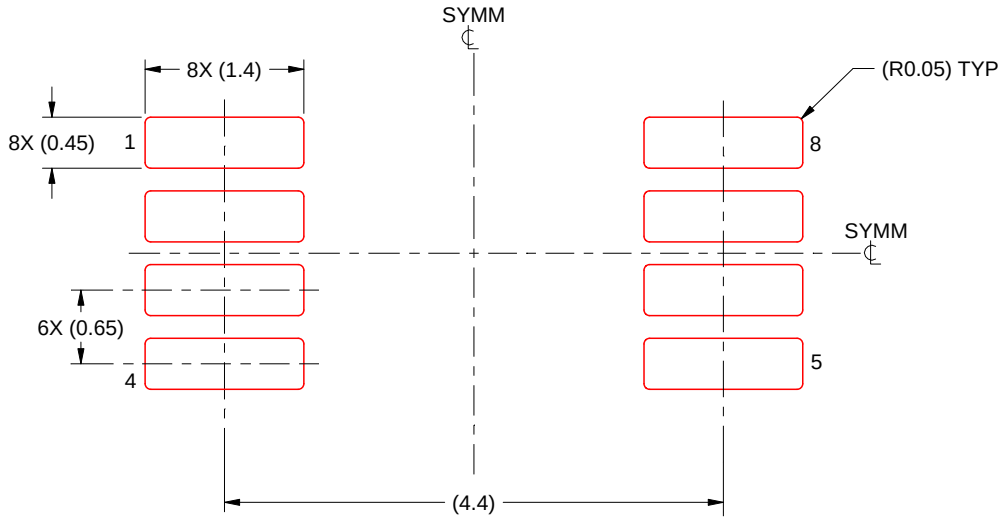

SOLDER PASTE EXAMPLE
SCALE: 15X

4214862/A 04/2023

NOTES: (continued)

11. Laser cutting apertures with trapezoidal walls and rounded corners may offer better paste release. IPC-7525 may have alternate design recommendations.
12. Board assembly site may have different recommendations for stencil design.

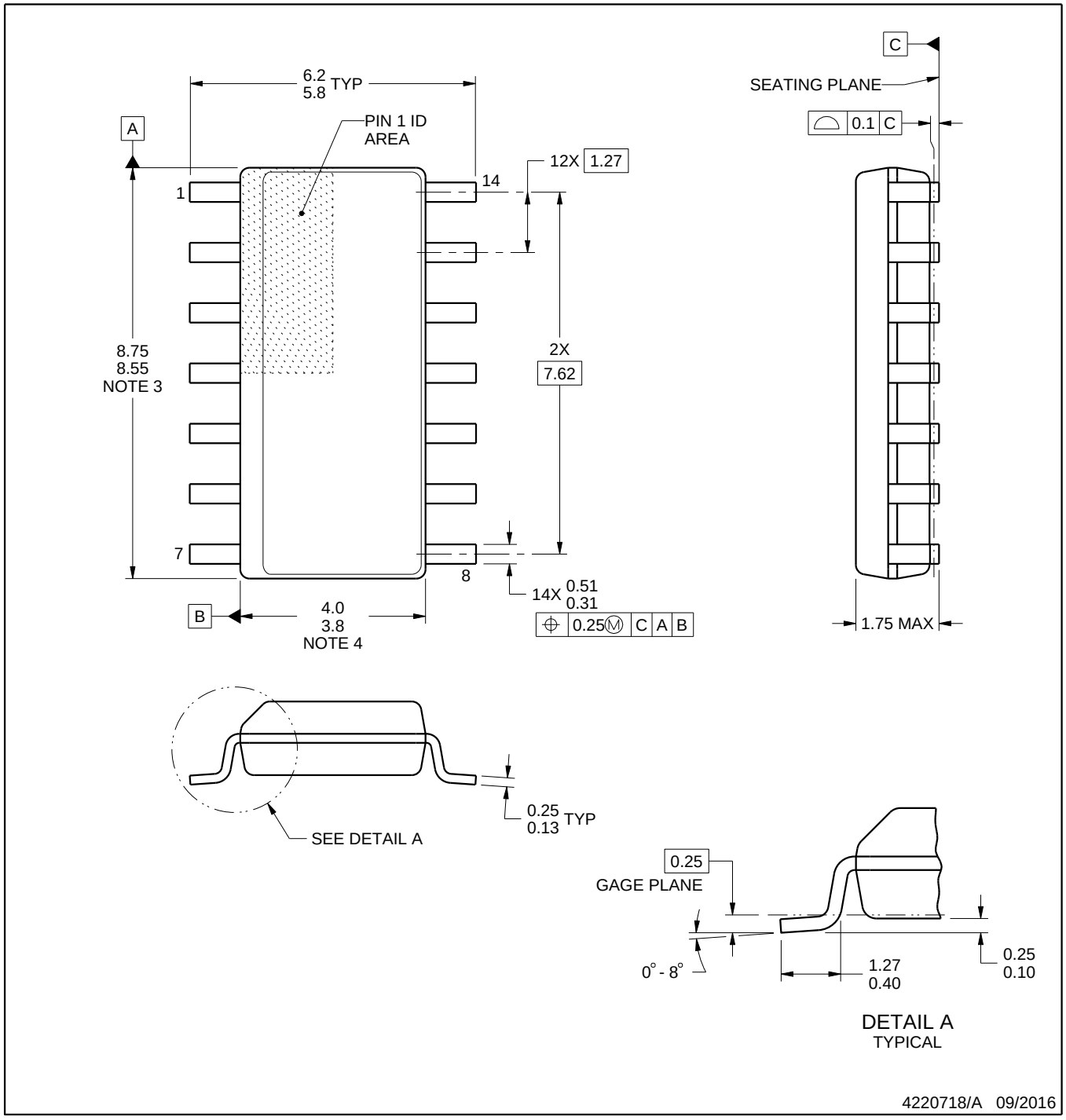

NOTES:

1. All linear dimensions are in millimeters. Dimensions in parenthesis are for reference only. Dimensioning and tolerancing per ASME Y14.5M.
2. This drawing is subject to change without notice.
3. This dimension does not include mold flash, protrusions, or gate burrs. Mold flash, protrusions, or gate burrs shall not exceed 0.15 mm, per side.
4. This dimension does not include interlead flash. Interlead flash shall not exceed 0.43 mm, per side.
5. Reference JEDEC registration MS-012, variation AB.

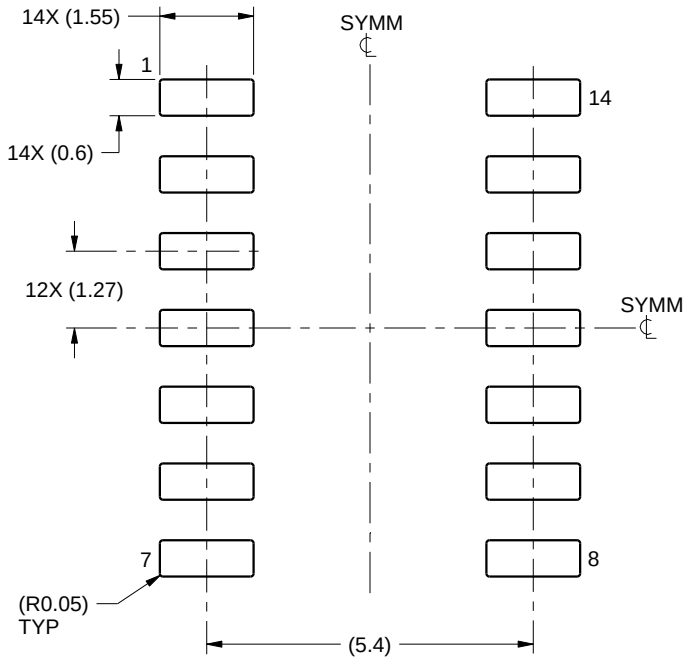

LAND PATTERN EXAMPLE
SCALE:8X

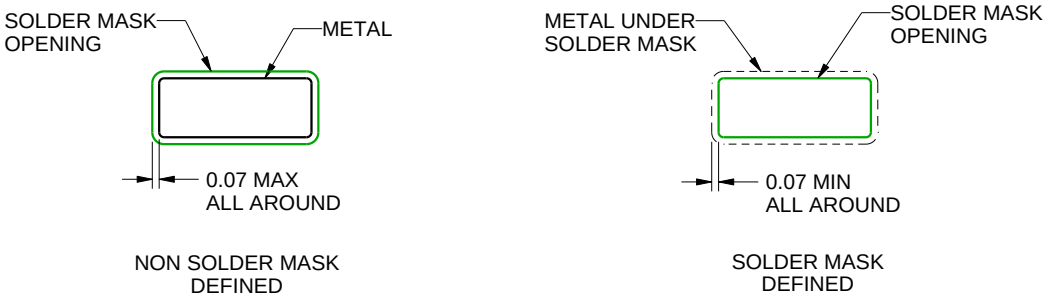

SOLDER MASK DETAILS

4220718/A 09/2016

NOTES: (continued)

6. Publication IPC-7351 may have alternate designs.
7. Solder mask tolerances between and around signal pads can vary based on board fabrication site.

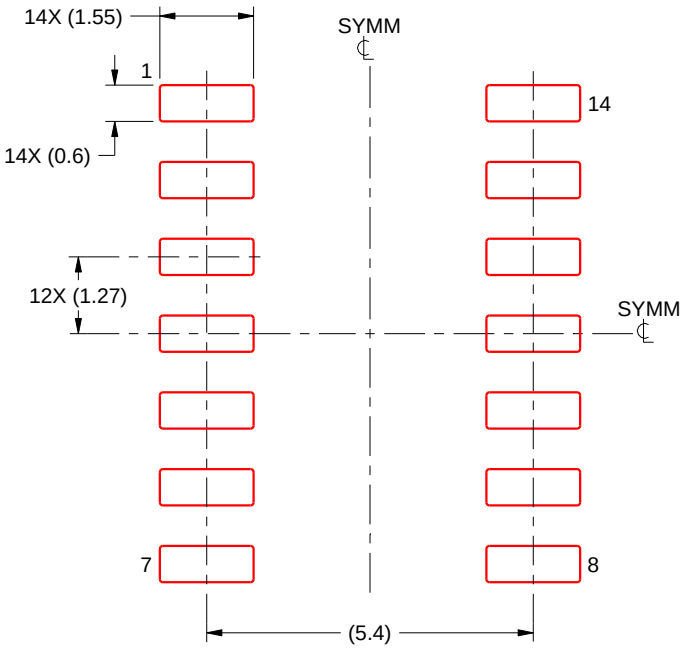

SOLDER PASTE EXAMPLE
BASED ON 0.125 mm THICK STENCIL
SCALE:8X

4220718/A 09/2016

NOTES: (continued)

8. Laser cutting apertures with trapezoidal walls and rounded corners may offer better paste release. IPC-7525 may have alternate design recommendations.
9. Board assembly site may have different recommendations for stencil design.

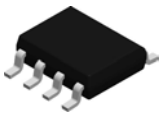

PACKAGE OUTLINE

D0008A

SOIC - 1.75 mm max height

SMALL OUTLINE INTEGRATED CIRCUIT

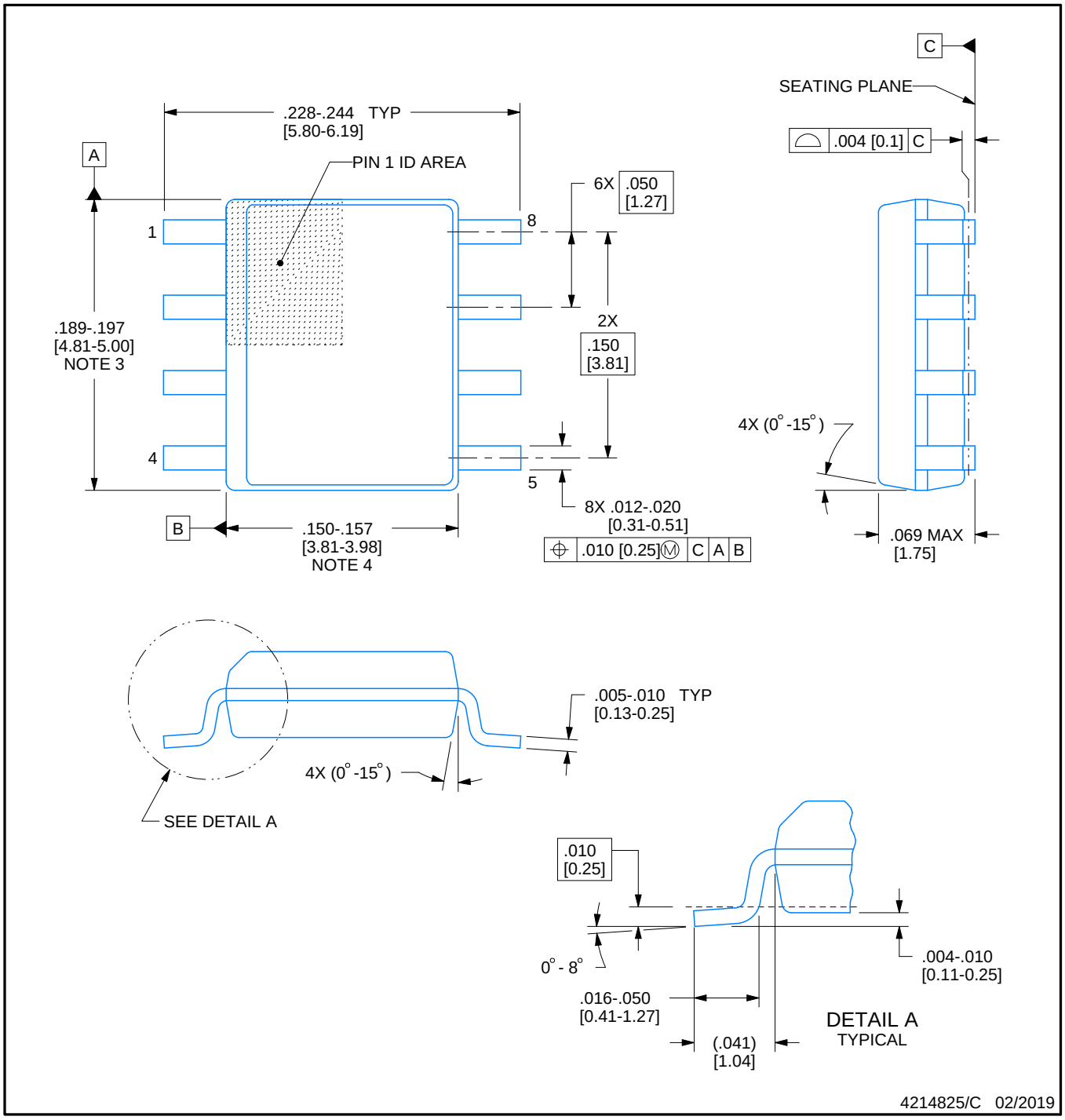

NOTES:

1. Linear dimensions are in inches [millimeters]. Dimensions in parenthesis are for reference only. Controlling dimensions are in inches. Dimensioning and tolerancing per ASME Y14.5M.
2. This drawing is subject to change without notice.
3. This dimension does not include mold flash, protrusions, or gate burrs. Mold flash, protrusions, or gate burrs shall not exceed .006 [0.15] per side.
4. This dimension does not include interlead flash.
5. Reference JEDEC registration MS-012, variation AA.

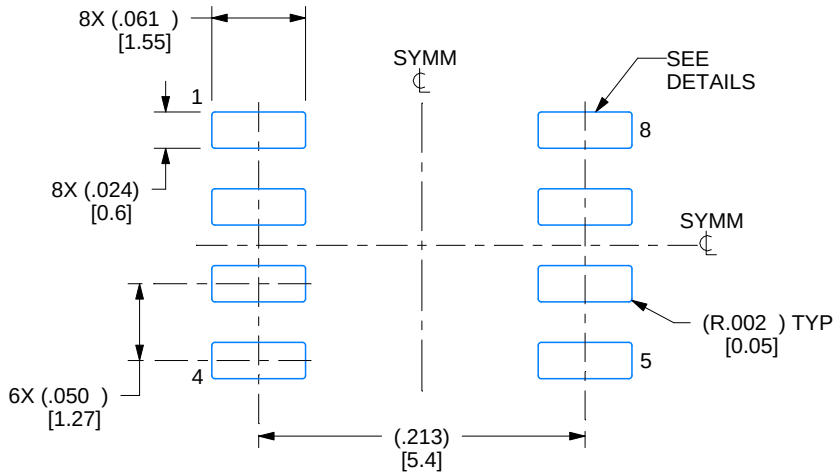

LAND PATTERN EXAMPLE
EXPOSED METAL SHOWN
SCALE:8X

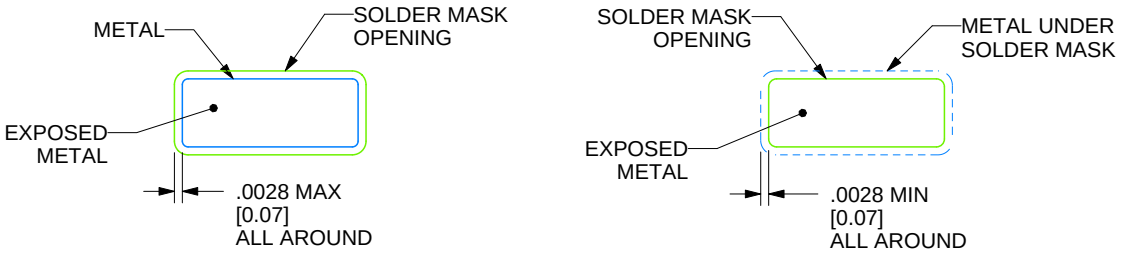

SOLDER MASK DETAILS

4214825/C 02/2019

NOTES: (continued)

6. Publication IPC-7351 may have alternate designs.
7. Solder mask tolerances between and around signal pads can vary based on board fabrication site.

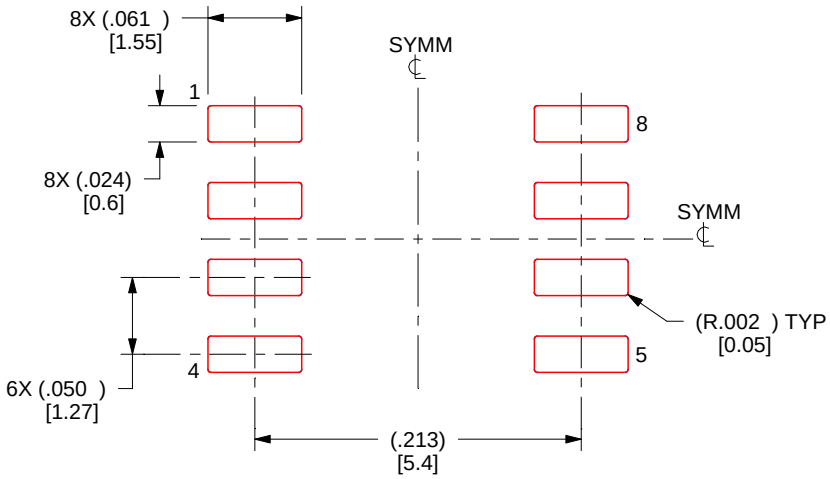

SOLDER PASTE EXAMPLE
BASED ON .005 INCH [0.125 MM] THICK STENCIL
SCALE:8X

4214825/C 02/2019

NOTES: (continued)

8. Laser cutting apertures with trapezoidal walls and rounded corners may offer better paste release. IPC-7525 may have alternate design recommendations.
9. Board assembly site may have different recommendations for stencil design.

P (R–PDIP–T8) PLASTIC DUAL–IN–LINE PACKAGE

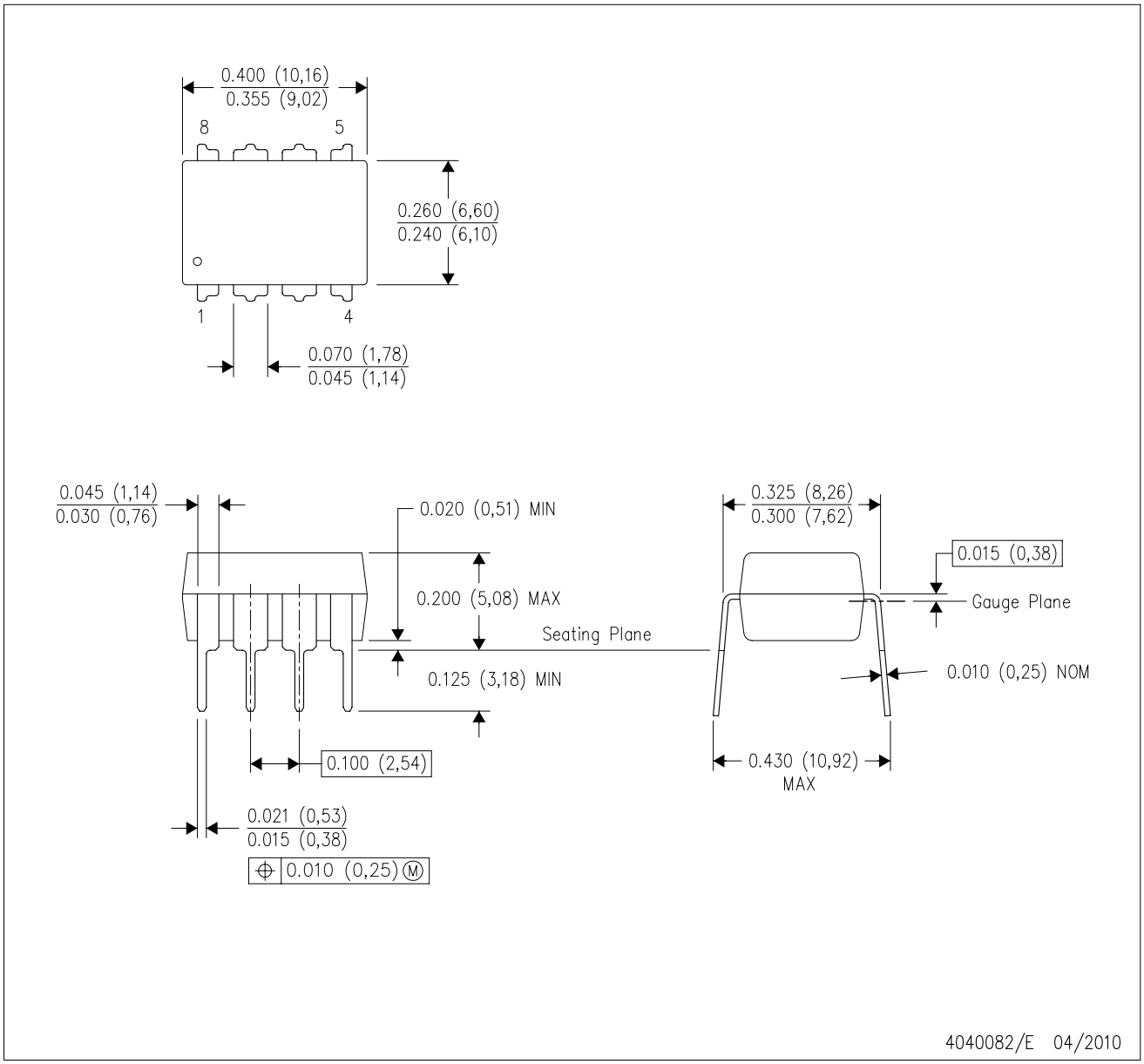

NOTES:
A. All linear dimensions are in inches (millimeters).
B. This drawing is subject to change without notice.
C. Falls within JEDEC MS–001 variation BA.

N (R–PDIP–T**) PLASTIC DUAL–IN–LINE PACKAGE

16 PINS SHOWN

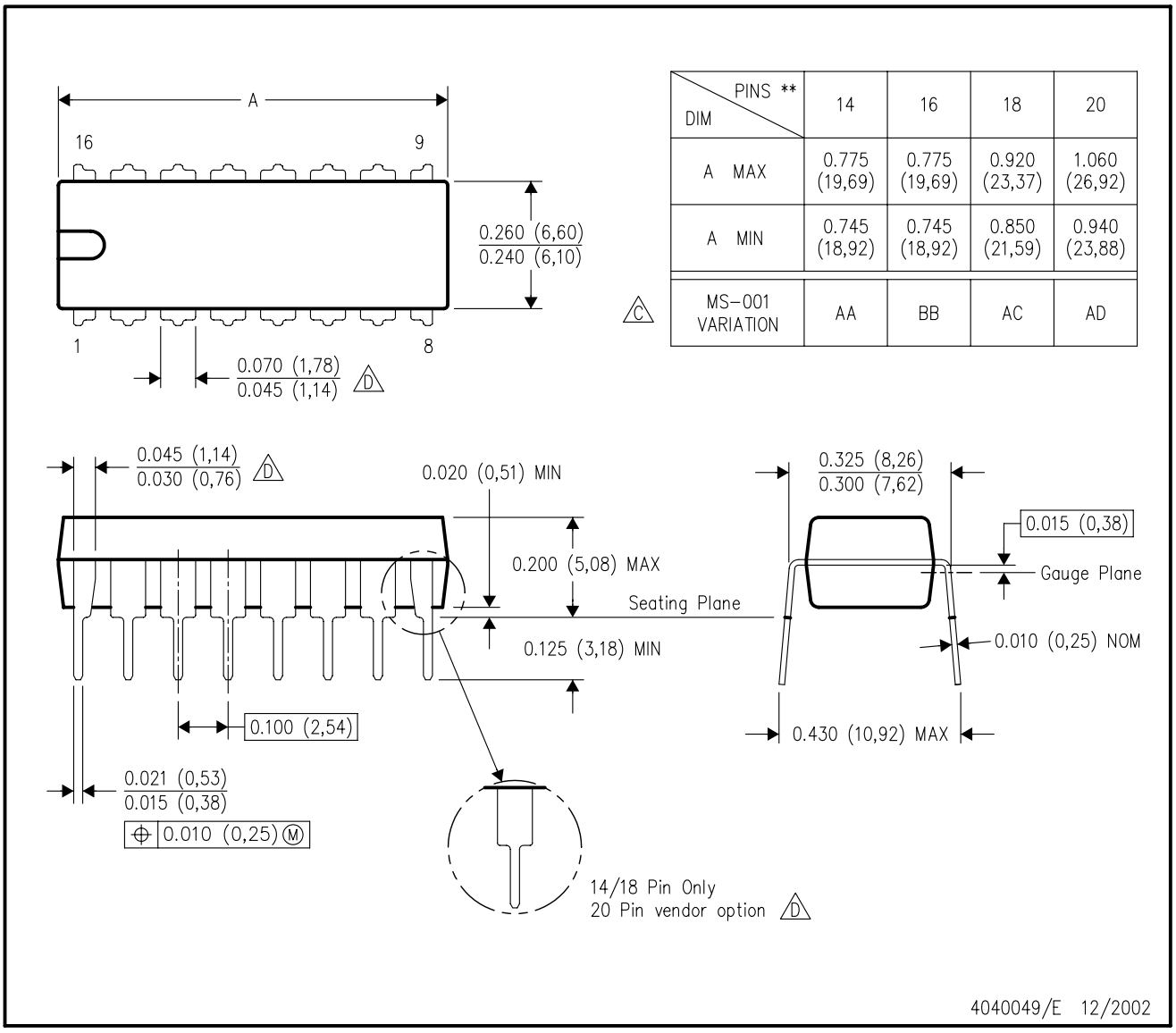

DIM \ PINS **	14	16	18	20
A MAX	0.775 (19,69)	0.775 (19,69)	0.920 (23,37)	1.060 (26,92)
A MIN	0.745 (18,92)	0.745 (18,92)	0.850 (21,59)	0.940 (23,88)
MS–001 VARIATION (C)	AA	BB	AC	AD

NOTES:
A. All linear dimensions are in inches (millimeters).
B. This drawing is subject to change without notice.
C. Falls within JEDEC MS–001, except 18 and 20 pin minimum body length (Dim A).
D. The 20 pin end lead shoulder width is a vendor option, either half or full width.

PW0014A

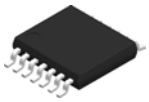

PACKAGE OUTLINE

TSSOP - 1.2 mm max height

SMALL OUTLINE PACKAGE

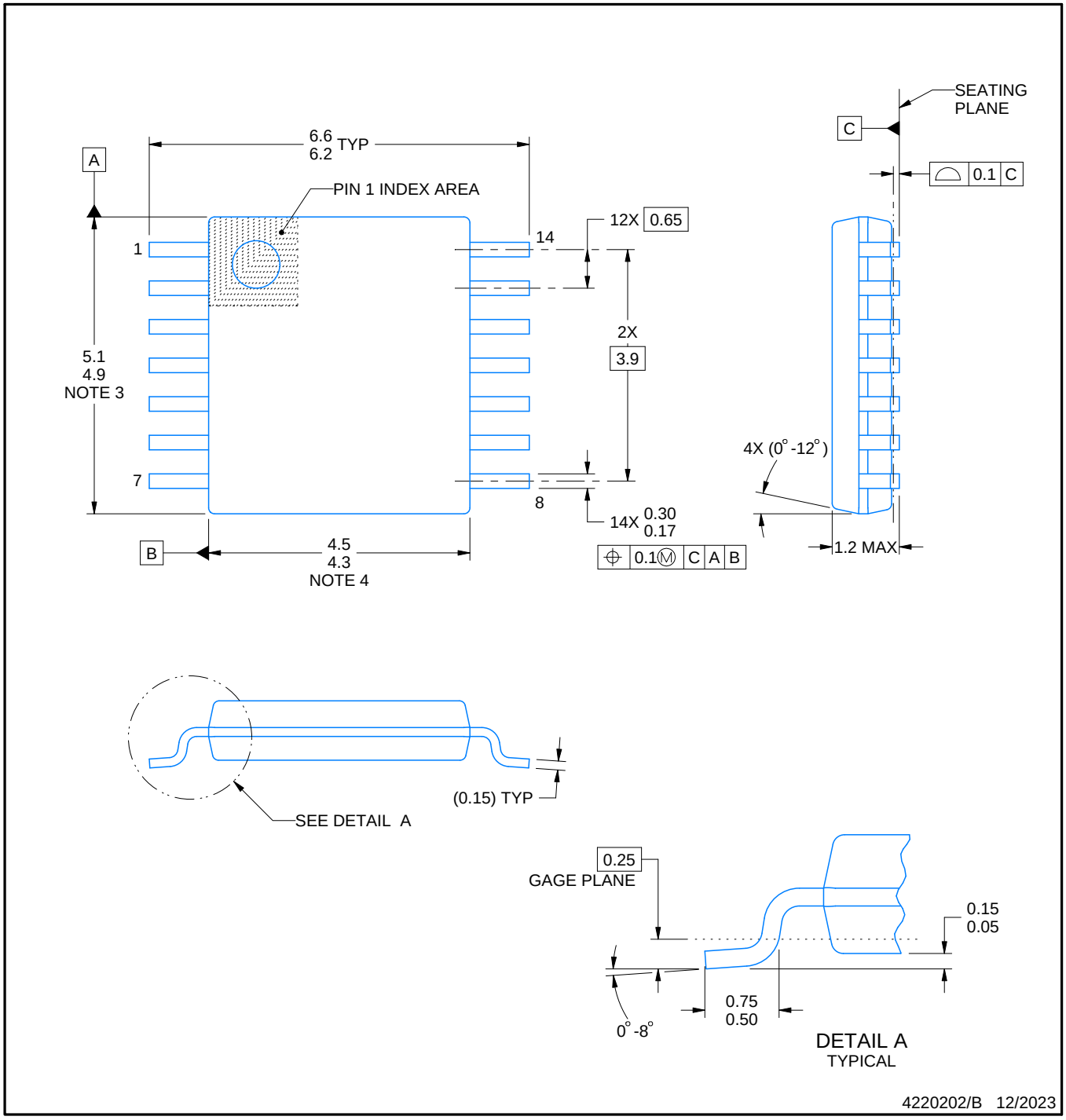

NOTES:

1. All linear dimensions are in millimeters. Any dimensions in parenthesis are for reference only. Dimensioning and tolerancing per ASME Y14.5M.
2. This drawing is subject to change without notice.
3. This dimension does not include mold flash, protrusions, or gate burrs. Mold flash, protrusions, or gate burrs shall not exceed 0.15 mm per side.
4. This dimension does not include interlead flash. Interlead flash shall not exceed 0.25 mm per side.
5. Reference JEDEC registration MO-153.

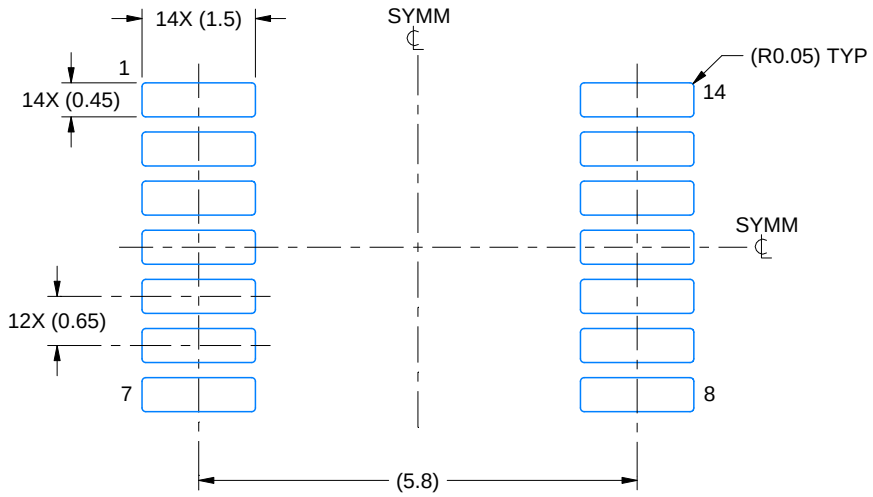

LAND PATTERN EXAMPLE
EXPOSED METAL SHOWN
SCALE: 10X

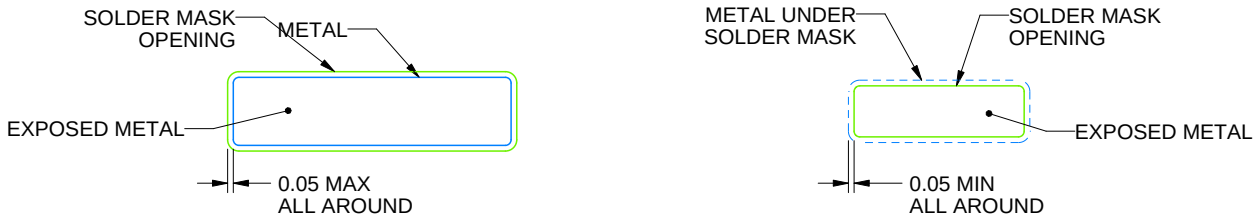

NON-SOLDER MASK DEFINED (PREFERRED)

SOLDER MASK DEFINED

SOLDER MASK DETAILS

4220202/B 12/2023

NOTES: (continued)

6. Publication IPC-7351 may have alternate designs.
7. Solder mask tolerances between and around signal pads can vary based on board fabrication site.

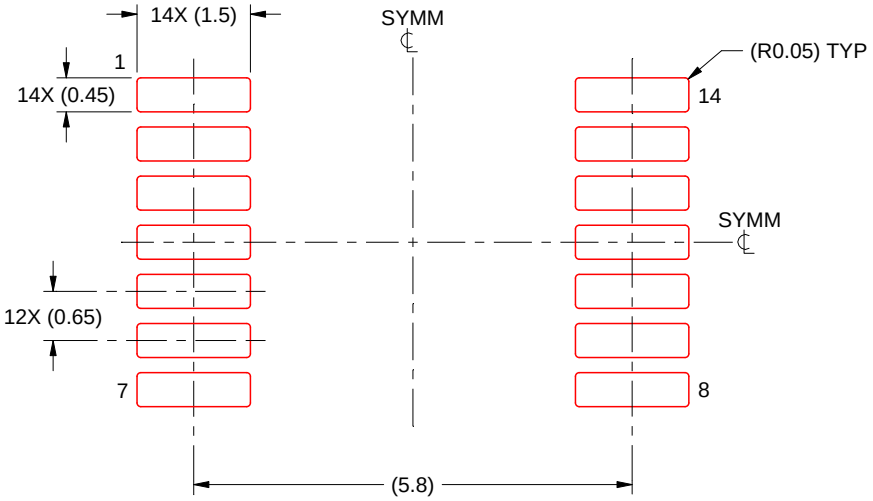

SOLDER PASTE EXAMPLE
BASED ON 0.125 mm THICK STENCIL
SCALE: 10X

4220202/B 12/2023

NOTES: (continued)

8. Laser cutting apertures with trapezoidal walls and rounded corners may offer better paste release. IPC-7525 may have alternate design recommendations.
9. Board assembly site may have different recommendations for stencil design.

IMPORTANT NOTICE AND DISCLAIMER

TI PROVIDES TECHNICAL AND RELIABILITY DATA (INCLUDING DATA SHEETS), DESIGN RESOURCES (INCLUDING REFERENCE DESIGNS), APPLICATION OR OTHER DESIGN ADVICE, WEB TOOLS, SAFETY INFORMATION, AND OTHER RESOURCES “AS IS” AND WITH ALL FAULTS, AND DISCLAIMS ALL WARRANTIES, EXPRESS AND IMPLIED, INCLUDING WITHOUT LIMITATION ANY IMPLIED WARRANTIES OF MERCHANTABILITY, FITNESS FOR A PARTICULAR PURPOSE OR NON-INFRINGEMENT OF THIRD PARTY INTELLECTUAL PROPERTY RIGHTS.

These resources are intended for skilled developers designing with TI products. You are solely responsible for (1) selecting the appropriate TI products for your application, (2) designing, validating and testing your application, and (3) ensuring your application meets applicable standards, and any other safety, security, regulatory or other requirements.

These resources are subject to change without notice. TI grants you permission to use these resources only for development of an application that uses the TI products described in the resource. Other reproduction and display of these resources is prohibited. No license is granted to any other TI intellectual property right or to any third party intellectual property right. TI disclaims responsibility for, and you will fully indemnify TI and its representatives against, any claims, damages, costs, losses, and liabilities arising out of your use of these resources.

TI’s products are provided subject to TI’s Terms of Sale or other applicable terms available either on ti.com or provided in conjunction with such TI products. TI’s provision of these resources does not expand or otherwise alter TI’s applicable warranties or warranty disclaimers for TI products.

TI objects to and rejects any additional or different terms you may have proposed.

Mailing Address: Texas Instruments, Post Office Box 655303, Dallas, Texas 75265
Copyright © 2024, Texas Instruments Incorporated