TLV900x Low-Power, RRIO, 1-MHz Operational Amplifier for Cost-Sensitive Systems

1 Features

- Scalable CMOS amplifier for low-cost applications
- Rail-to-rail input and output
- Low input offset voltage: ±0.4 mV
- Unity-gain bandwidth: 1 MHz
- Low broadband noise: 27 nV/√Hz
- Low input bias current: 5 pA
- Low quiescent current: 60 µA/Ch
- Unity-gain stable
- Internal RFI and EMI filter
- Operational at supply voltages as low as 1.8 V
- Easier to stabilize with higher capacitive load due to resistive open-loop output impedance
- Extended temperature range: –40°C to 125°C

2 Applications

- Sensor signal conditioning
- Power modules
- Active filters
- Low-side current sensing
- Smoke detectors
- Motion detectors
- Wearable devices
- Large and small appliances
- EPOS
- Barcode scanners
- Personal electronics
- HVAC: heating, ventilating, and air conditioning
- Motor control: AC induction

3 Description

The TLV900x family includes single (TLV9001), dual (TLV9002), and quad-channel (TLV9004) low-voltage (1.8 V to 5.5 V) operational amplifiers (op amps) with rail-to-rail input and output swing capabilities. These op amps provide a cost-effective solution for space-constrained applications such as smoke detectors, wearable electronics, and small appliances where low-voltage operation and high capacitive-load drive are required. The capacitive-load drive of the TLV900x family is 500 pF, and the resistive open-loop output impedance makes stabilization easier with much higher capacitive loads. These op amps are designed specifically for low-voltage operation (1.8 V to 5.5 V) with performance specifications similar to the TLV600x devices.

The robust design of the TLV900x family simplifies circuit design. The op amps feature unity-gain stability, an integrated RFI and EMI rejection filter, and no-phase reversal in overdrive conditions.

The TLV900x devices include a shutdown mode (TLV9001S, TLV9002S, and TLV9004S) that allow the amplifiers to switch off into standby mode with typical current consumption less than 1 µA.

Micro-size packages, such as SOT-553 and WSON, are offered for all channel variants (single, dual, and quad), along with industry-standard packages such as SOIC, MSOP, SOT-23, and TSSOP packages.

Device Information

PART NUMBER(1)	PACKAGE	BODY SIZE (NOM)
TLV9001	SOT-23 (5)	1.60 mm × 2.90 mm
	SC70 (5)	1.25 mm × 2.00 mm
	SOT-553 (5)(2)	1.65 mm × 1.20 mm
	X2SON (5)	0.80 mm × 0.80 mm
TLV9001S	SOT-23 (6)	1.60 mm × 2.90 mm
	SC70 (6)	1.25 mm × 2.00 mm
TLV9002	SOIC (8)	3.91 mm × 4.90 mm
	WSON (8)	2.00 mm × 2.00 mm
	VSSOP (8)	3.00 mm × 3.00 mm
	SOT-23 (8)	1.60 mm × 2.90 mm
	TSSOP (8)	3.00 mm × 4.40 mm
TLV9002S	VSSOP (10)	3.00 mm × 3.00 mm
	X2QFN (10)	1.50 mm × 2.00 mm
	DSBGA (9)	1.00 mm × 1.00 mm
TLV9004	SOIC (14)	8.65 mm × 3.91 mm
	SOT-23 (14)	4.20 mm × 2.00 mm
	TSSOP (14)	4.40 mm × 5.00 mm
	WQFN (16)	3.00 mm × 3.00 mm
	X2QFN (14)	2.00 mm × 2.00 mm
TLV9004S	WQFN (16)	3.00 mm × 3.00 mm

(1) For all available packages, see the orderable addendum at the end of the data sheet.
(2) Package is for preview only.

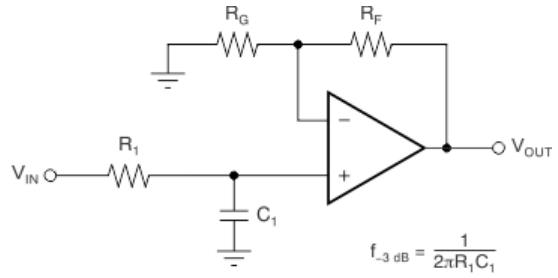

$$\frac{V_{OUT}}{V_{IN}} = \left(1 + \frac{R_F}{R_G}\right)\left(\frac{1}{1 + sR_1C_1}\right)$$

Single-Pole, Low-Pass Filter

An IMPORTANT NOTICE at the end of this data sheet addresses availability, warranty, changes, use in safety-critical applications, intellectual property matters and other important disclaimers. PRODUCTION DATA.

Table of Contents

1 Features....1
2 Applications....1
3 Description....1
4 Revision History....2
5 Device Comparison Table....6
6 Pin Configuration and Functions....7
7 Specifications....14
7.1 Absolute Maximum Ratings....14
7.2 ESD Ratings....14
7.3 Recommended Operating Conditions....14
7.4 Thermal Information: TLV9001....15
7.5 Thermal Information: TLV9001S....15
7.6 Thermal Information: TLV9002....15
7.7 Thermal Information: TLV9002S....16
7.8 Thermal Information: TLV9004....16
7.9 Thermal Information: TLV9004S....16
7.10 Electrical Characteristics....17
7.11 Typical Characteristics....19
8 Detailed Description....25
8.1 Overview....25
8.2 Functional Block Diagram....25
8.3 Feature Description....26
8.4 Overload Recovery....27
8.5 Shutdown....27
8.6 Device Functional Modes....27
9 Application and Implementation....28
9.1 Application Information....28
9.2 Typical Application....28
10 Power Supply Recommendations....34
10.1 Input and ESD Protection....34
11 Layout....35
11.1 Layout Guidelines....35
11.2 Layout Example....35
12 Device and Documentation Support....36
12.1 Documentation Support....36
12.2 Receiving Notification of Documentation Updates....36
12.3 Support Resources....36
12.4 Trademarks....36
12.5 Electrostatic Discharge Caution....36
12.6 Glossary....36
13 Mechanical, Packaging, and Orderable Information....36

4 Revision History

NOTE: Page numbers for previous revisions may differ from page numbers in the current version.

Changes from Revision Q (June 2021) to Revision R (November 2021) — **Page**

- Added SOT-23 (14) package to *Device Information* table....1
- Added SOT-23 DYY package to *Device Comparison Table*....6
- Added SOT-23 (14) package to *Pin Configuration and Functions* section....7
- Added DYY (SOT-23) package thermal information to the *Thermal Information: TLV9004* table....16

Changes from Revision P (April 2021) to Revision Q (June 2021) — **Page**

- Changed supply voltage (V+) – (V–) MAX from 6 V to 7 V in the *Absolute Maximum Ratings* table....14

Changes from Revision O (April 2020) to Revision P (April 2021) — **Page**

- Updated the numbering format for tables, figures, and cross-references throughout the document....1
- Added 9-pin DSBGA package to *Device Information* table....1
- Added 9-pin DSBGA package to *Device Comparison Table*....6
- Added TLV9002S 9-pin DSBGA package to *Pin Configuration and Functions* section....7
- Added TLV9002S 9-pin DSBGA package to *Thermal Information: TLV9002S*....16
- Deleted the *Related Links* section from the *Device and Documentation Support* section....36

Changes from Revision N (January 2020) to Revision O (April 2020) — **Page**

- Deleted PREVIEW designation on TLV9001S....1
- Deleted TLV9001SIDCK (6-pin SC70) package preview note....7

Copyright © 2024 Texas Instruments Incorporated

- Added DCK (SC70) data to the Thermal Information: TLV9001S table 15

Changes from Revision M (September 2019) to Revision N (January 2020) **Page**

- Added 6-pin SC70 package to *Device Information* table..... 1
- Added 6-pin SC70 package to *Device Comparison Table* 6
- Added TLV9001SIDCK (6-Pin SC70) package pinout..... 7
- Added TLV9001S 6-pin SC70 package to *Pin Configuration and Functions* section..... 7
- Added 6-pin SC70 pinout to *Pin Functions: TLV9001S* 7
- Added TLV9001S 6-pin SC70 package to *Thermal Information: TLV9001S* table..... 15

Changes from Revision L (May 2019) to Revision M (September 2019) **Page**

- Deleted preview notations for SOT-23-8 (DDF) package..... 6
- Added link to *Shutdown* section in all $\overline{\text{SHDN}}$ pin function rows..... 7
- Added *EMI Rejection* section to the *Feature Description* section..... 26
- Changed the *Shutdown* section to add more clarity regarding internal pull-up resistor..... 27

Changes from Revision K (March 2019) to Revision L (May 2019) **Page**

- Added SOT-23 (8) information to *Device Information* table..... 1
- Added SOT-23 DDF package to *Device Comparison Table* 6
- Added SOT-23 (DDF) to *Pin Configuration and Functions* section..... 7
- Added DDF (SOT-23) *Thermal Information: TLV9002* table..... 15

Changes from Revision J (January 2019) to Revision K (March 2019) **Page**

- Changed TLV9002S *ESD Ratings* heading to include all TLV9002S packages..... 14
- Deleted preview notation from TLV9002SIRUG in *Thermal Information* table..... 16

Changes from Revision I (November 2018) to Revision J (January 2019) **Page**

- Deleted preview notation for TLV9002SIRUGR..... 1
- Changed TLV9004 WQFN(14) package designator to X2QFN(14) package designator..... 1
- Added RUG package to *Device Comparison Table* 6
- Added DGS package to *Device Comparison Table* 6
- Added shutdown devices to *Device Comparison Table* 6
- Changed TLV9001 DRL package pinout drawing..... 7
- Changed TLV9001 DRL package pin functions..... 7
- Deleted package preview note from TLV9002SIRUGR (X2QFN) pinout drawing..... 7
- Added TLV9004IRUC Thermal Information..... 16
- Changed legend of Closed-Loop Gain vs Frequency plot..... 19

Changes from Revision H (October 2018) to Revision I (November 2018) **Page**

- Added TLV9002SIDGS to *ESD Ratings* table..... 14

Changes from Revision G (September 2018) to Revision H (October 2018) **Page**

- Changed From: TLV9001 DCK Package To: TLV9001T DCK Package.....7

Changes from Revision F (August 2018) to Revision G (September 2018) **Page**

- Added *Device Comparison Table* 6
- Changed pin names for all devices and all packages.....7
- Changed pin names and I/O designation on some TLV9001 pins 7
- Changed the pin number for V+ in the *SOIC, TSSOP* column of the *Pin Functions: TLV9004* table.....7

Changes from Revision E (July 2018) to Revision F (August 2018) **Page**

- Added Scalabe CMOS Amplifier for Low-Cost Applications feature.....1
- Deleted PREVIEW designation on TLV9002 and TLV9004 devices with the TSSOP package. 1
- Added TLV9001U DBV (SOT-23) pinout drawing to *Pin Configuration and Functions* section 7
- Added SOT-23 U Pinout to *Pin Functions* section 7

Changes from Revision D (June 2018) to Revision E (July 2018) **Page**

- Corrected typo in *Description* section 1
- Added TLV9001 5-pin X2SON package to *Device Information* table 1
- Added TLV9001S 6-pin SOT-23 package to *Device Information* table.....1
- Added TLV9004 14-pin and 16-pin WQFN packages to *Device Information* table 1
- Added TLV9001 DPW (X2SON) pinout drawing to *Pin Configuration and Functions* section.....7
- Added TLV9001S 6-pin SOT-23 package to *Pin Configuration and Functions* section.....7
- Added TLV9004 RTE pinout information to *Pin Configuration and Functions* section 7
- Added DPW (X2SON) and DRL (SOT-553) packages to *Thermal Information: TLV9001* table.....15
- Added *Thermal Information: TLV9001S* table to *Specifications* section.....15
- Added RUG (X2QFN) package to *Thermal Information: TLV9002* table.....15
- Added RTE (WQFN) and RUC (WQFN) packages to *Thermal Information: TLV9004* table.....16

Changes from Revision C (May 2018) to Revision D (June 2018) **Page**

- Added shutdown text to *Description* section.....1
- Added TLV9002S and TLV9004S devices to *Device Information* table.....1
- Added TLV9002S 10-pin X2QFN package to *Device Information* table.....1
- Added TLV9002S DGS package pinout information to *Pin Configurations and Functions* section.....7
- Added *Thermal Information: TLV9001* table to *Specifications* section.....15
- Added *Thermal Information: TLV9004* table to *Specifications* section.....16
- Added shutdown section to *Electrical Characteristics:* V_S *(Total Supply Voltage) = (V+) – (V–) = 1.8 V to 5.5 V* table.....17
- Added *Shutdown* section.....27

Changes from Revision B (March 2018) to Revision C (May 2018) **Page**

- Added TLV9002 16-pin TSSOP package to *Device Information* table.....1
- Added TLV9002 10-pin X2QFN package to *Device Information* table.....1
- Added TLV9002S DGS package pinout drawing in *Pin Configurations and Functions* section.....7
- Added TLV9004 pinout diagram and pin configuration table to *Pin Configuration and Functions* section 7
- Added TLV9004S pinout diagram and pin configuration table to *Pin Configuration and Functions* section 7

Copyright © 2024 Texas Instruments Incorporated

- Changed TLV9002 D (SOIC) junction-to-ambient thermal resistance value from 147.4°C/W to 207.9°C/W... 15
- Changed TLV9002 D (SOIC) junction-to-case (top) thermal resistance from 94.3°C/W to 92.8°C/W.....15
- Changed TLV9002 D (SOIC) junction-to-board thermal resistance from 89.5°C/W to 129.7°C/W.....15
- Changed TLV9002 D (SOIC) junction-to-top characterization parameter from 47.3°C/W to 26°C/W..... 15
- Changed TLV9002 D (SOIC) junction-to-board characterization parameter from 89°C/W to 127.9°C/W..... 15
- Added DGK (VSSOP) thermal information to *Thermal Information: TLV9002* table 15
- Added TLV9002 PW (TSSOP) thermal information to *Thermal Information: TLV9002* table..... 15
- Added PW (TSSOP) thermal information to *Thermal Information: TLV9002* table 16

Changes from Revision A (December 2017) to Revision B (March 2018) **Page**

- Added package preview notes to TLV9001 packages, TLV9004 packages, and TLV9002 8-pin VSSOP package in *Device Information* table 1
- Added package preview notes to TLV9001, TLV9004 and TLV9002 VSSOP package pinout drawings in *Pin Configuration and Functions* section 7
- Deleted package preview note from TLV9002 DSG (WSON) pinout drawing in Pin Configurations and Functions section.....7
- Deleted package preview note from TLV9002 RUG (X2QFN) pinout drawing in *Pin Configurations and Functions* section.....7
- Added DSG (WSON) package thermal information to the *Thermal Information: TLV9002* table..... 15
- Deleted package preview note from DSG (WSON) package in *Thermal Information: TLV9002* table..... 15
- Added D (SOIC) package thermal information to the *Thermal Information: TLV9004* table.....16

Changes from Revision * (October 2017) to Revision A (December 2017) **Page**

- Changed device status from Advance Information to Production Data/Mixed Status..... 1

5 Device Comparison Table

DEVICE	NO. OF CH.	PACKAGE LEADS														
		SC70 DCK	SOIC D	SOT-23 DBV	SOT-23 DYY	SOT-553 DRL	TSSOP PW	VSSOP DGK	SOT-23 DDF	WQFN RTE	WSON DSG	X2QFN RUC	X2SON DPW	X2QFN RUG	VSSOP DGS	DSBGA YCK
TLV9001	1	5	—	5	—	5	—	—	—	—	—	—	5	—	—	—
TLV9001S		6	—	6	—	—	—	—	—	—	—	—	—	—	—	—
TLV9002	2	—	8	—	—	—	8	8	8	—	8	—	—	—	—	—
TLV9002S		—	—	—	—	—	—	—	—	—	—	—	—	10	10	9
TLV9004	4	—	14	—	14	—	14	—	—	16	—	14	—	—	—	—
TLV9004S		—	—	—	—	—	—	—	—	16	—	—	—	—	—	—

Copyright © 2024 Texas Instruments Incorporated

6 Pin Configuration and Functions

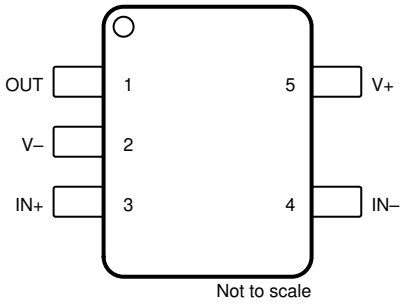

Figure 6-1. TLV9001 DBV, TLV9001T DCK Package 5-Pin SOT-23, SC70 Top View

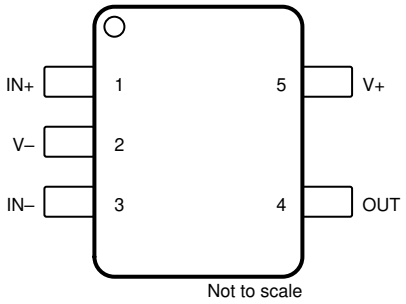

Figure 6-2. TLV9001 DCK Package, TLV9001 DRL Package, TLV9001U DBV Package 5-Pin SC70, SOT-553, SOT-23 Top View

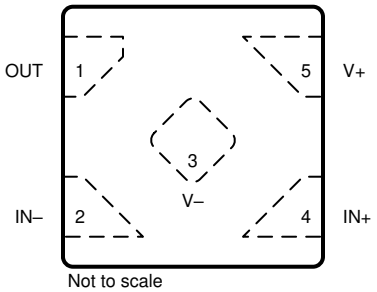

Figure 6-3. TLV9001 DPW Package 5-Pin X2SON Top View

Table 6-1. Pin Functions: TLV9001

PIN				I/O	DESCRIPTION
NAME	SOT-23, SC70(T)	SC70, SOT-23(U), SOT-553	X2SON		
IN–	4	3	2	I	Inverting input
IN+	3	1	4	I	Noninverting input
OUT	1	4	1	O	Output
V–	2	2	3	I or —	Negative (low) supply or ground (for single-supply operation)
V+	5	5	5	I	Positive (high) supply

Copyright © 2024 Texas Instruments Incorporated

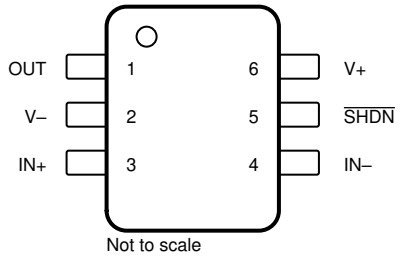

Figure 6-4. TLV9001S DBV Package 6-Pin SOT-23 Top View

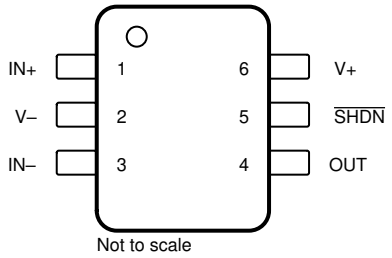

Figure 6-5. TLV9001S DCK Package 6-Pin SC70 Top View

Table 6-2. Pin Functions: TLV9001S

PIN			I/O	DESCRIPTION
NAME	SOT-23	SC70		
IN–	4	3	I	Inverting input
IN+	3	1	I	Noninverting input
OUT	1	4	O	Output
$\overline{\text{SHDN}}$	5	5	I	Shutdown: low = amp disabled, high = amp enabled. See Section 8.5 for more information.
V–	2	2	I or —	Negative (low) supply or ground (for single-supply operation)
V+	6	6	I	Positive (high) supply

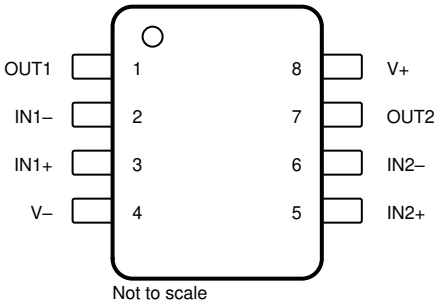

Figure 6-6. TLV9002 D, DGK, PW, DDF Package 8-Pin SOIC, VSSOP, TSSOP, SOT-23 Top View

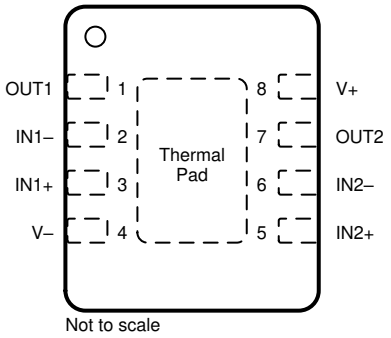

A. Connect thermal pad to V–.

Figure 6-7. TLV9002 DSG Package 8-Pin WSON With Exposed Thermal Pad Top View

Table 6-3. Pin Functions: TLV9002

PIN		I/O	DESCRIPTION
NAME	NO.		
IN1–	2	I	Inverting input, channel 1
IN1+	3	I	Noninverting input, channel 1
IN2–	6	I	Inverting input, channel 2
IN2+	5	I	Noninverting input, channel 2
OUT1	1	O	Output, channel 1
OUT2	7	O	Output, channel 2
V–	4	I or —	Negative (low) supply or ground (for single-supply operation)
V+	8	I	Positive (high) supply

Copyright © 2024 Texas Instruments Incorporated

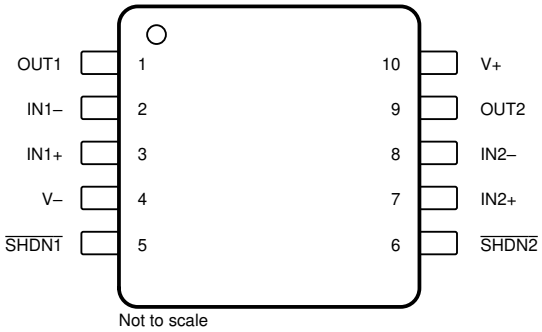

Figure 6-8. TLV9002S DGS Package
10-Pin VSSOP
Top View

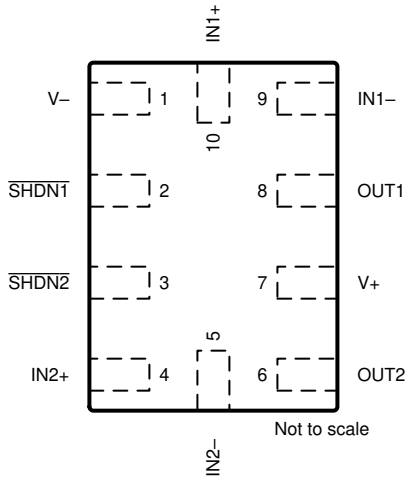

Figure 6-9. TLV9002S RUG Package
10-Pin X2QFN
Top View

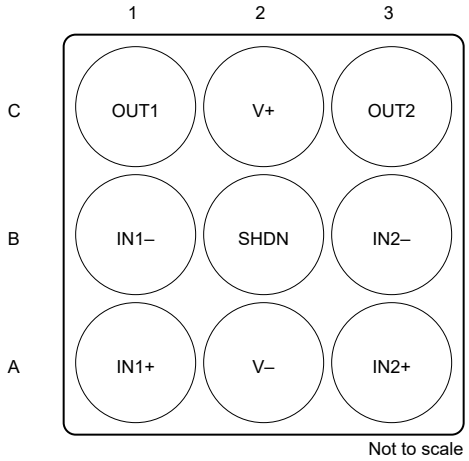

Figure 6-10. TLV9002S YCK Package
9-Pin DSBGA (WCSP)
Bottom View

Table 6-4. Pin Functions: TLV9002S

PIN				I/O	DESCRIPTION
NAME	VSSOP	X2QFN	DSBGA (WCSP)		
IN1–	2	9	B1	I	Inverting input, channel 1
IN1+	3	10	A1	I	Noninverting input, channel 1
IN2–	8	5	B3	I	Inverting input, channel 2
IN2+	7	4	A3	I	Noninverting input, channel 2
OUT1	1	8	C1	O	Output, channel 1
OUT2	9	6	C3	O	Output, channel 2
$\overline{\text{SHDN1}}$	5	2	—	I	Shutdown: low = amp disabled, high = amp enabled, channel 1. See Section 8.5 for more information.

Copyright © 2024 Texas Instruments Incorporated

Table 6-4. Pin Functions: TLV9002S (continued)

PIN				I/O	DESCRIPTION
NAME	VSSOP	X2QFN	DSBGA (WCSP)		
$\overline{\text{SHDN2}}$	6	3	—	I	Shutdown: low = amp disabled, high = amp enabled, channel 1. See Section 8.5 for more information.
$\overline{\text{SHDN}}$	—	—	B2		Shutdown: low = both amplifiers disabled, high = both amplifiers enabled
V–	4	1	A2	I or —	Negative (low) supply or ground (for single-supply operation)
V+	10	7	C2	I	Positive (high) supply

Copyright © 2024 Texas Instruments Incorporated

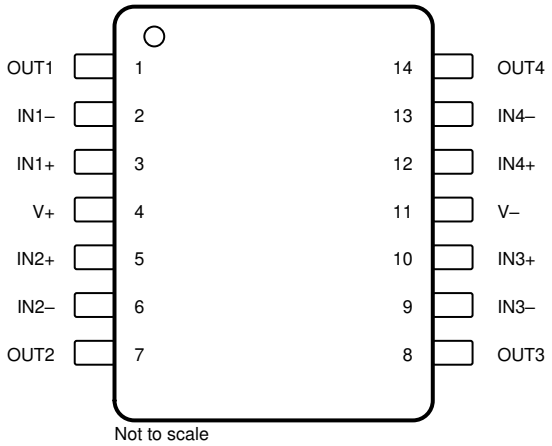

Figure 6-11. TLV9004 D, DYY, PW Package 14-Pin SOIC, SOT-23 (14), TSSOP Top View

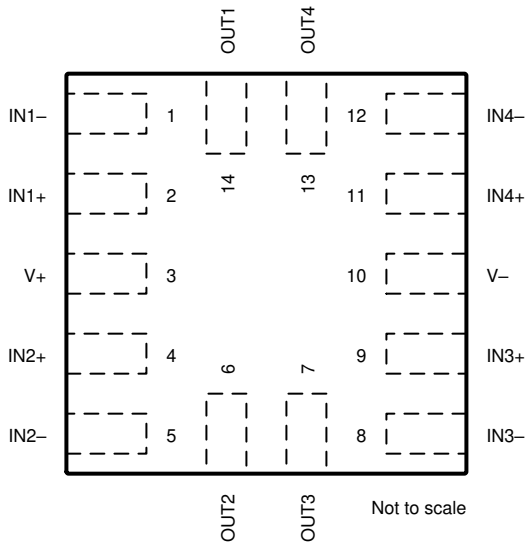

Figure 6-12. TLV9004 RUC Package 14-Pin X2QFN Top View

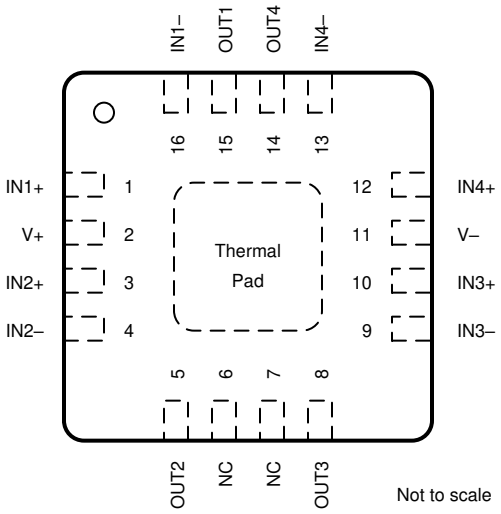

A. Connect thermal pad to V–.

Figure 6-13. TLV9004 RTE Package 16-Pin WQFN With Exposed Thermal Pad Top View

Table 6-5. Pin Functions: TLV9004

PIN				I/O	DESCRIPTION
NAME	SOIC, SOT-23 (14), TSSOP	WQFN	X2QFN		
IN1–	2	16	1	I	Inverting input, channel 1
IN1+	3	1	2	I	Noninverting input, channel 1
IN2–	6	4	5	I	Inverting input, channel 2
IN2+	5	3	4	I	Noninverting input, channel 2

Copyright © 2024 Texas Instruments Incorporated

Table 6-5. Pin Functions: TLV9004 (continued)

PIN				I/O	DESCRIPTION
NAME	SOIC, SOT-23 (14), TSSOP	WQFN	X2QFN		
IN3–	9	9	8	I	Inverting input, channel 3
IN3+	10	10	9	I	Noninverting input, channel 3
IN4–	13	13	12	I	Inverting input, channel 4
IN4+	12	12	11	I	Noninverting input, channel 4
NC	—	6, 7	—	—	No internal connection
OUT1	1	15	14	O	Output, channel 1
OUT2	7	5	6	O	Output, channel 2
OUT3	8	8	7	O	Output, channel 3
OUT4	14	14	13	O	Output, channel 4
V–	11	11	10	I or —	Negative (low) supply or ground (for single-supply operation)
V+	4	2	3	I	Positive (high) supply

Copyright © 2024 Texas Instruments Incorporated

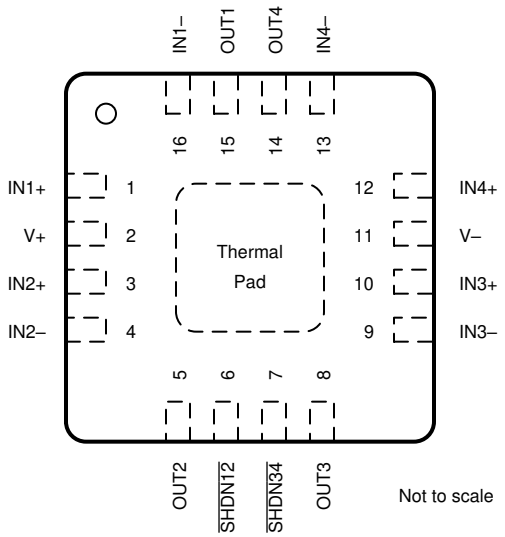

A. Connect thermal pad to V–.

Figure 6-14. TLV9004S RTE Package
16-Pin WQFN With Exposed Thermal Pad
Top View

Table 6-6. Pin Functions: TLV9004S

PIN		I/O	DESCRIPTION
NAME	NO.		
IN1+	1	I	Noninverting input
IN1–	16	I	Inverting input
IN2+	3	I	Noninverting input
IN2–	4	I	Inverting input
IN3+	10	I	Noninverting input
IN3–	9	I	Inverting input
IN4+	12	I	Noninverting input
IN4–	13	I	Inverting input
$\overline{\text{SHDN12}}$	6	I	Shutdown: low = amp disabled, high = amp enabled, channel 1 and 2. See Section 8.5 for more information.
$\overline{\text{SHDN34}}$	7	I	Shutdown: low = amp disabled, high = amp enabled, channel 3 and 4. See Section 8.5 for more information.
OUT1	15	O	Output
OUT2	5	O	Output
OUT3	8	O	Output
OUT4	14	O	Output
V–	11	I or —	Negative (low) supply or ground (for single-supply operation)
V+	2	I	Positive (high) supply

Copyright © 2024 Texas Instruments Incorporated

7 Specifications

7.1 Absolute Maximum Ratings

over operating temperature range (unless otherwise noted)[1]

			MIN	MAX	UNIT
Supply voltage (V+) – (V–)				7	V
Signal input pins	Voltage[2]	Common-mode	(V–) – 0.5	(V+) + 0.5	V
		Differential		(V+) – (V–) + 0.2	V
	Current[2]		–10	10	mA
Output short-circuit[3]			Continuous		
Operating, T_A			–55	150	°C
Junction, T_J				150	°C
Storage, T_{stg}			–65	150	°C

(1) Stresses beyond those listed under *Absolute Maximum Ratings* may cause permanent damage to the device. These are stress ratings only, which do not imply functional operation of the device at these or any other conditions beyond those indicated under *Recommended Operating Conditions*. Exposure to absolute-maximum-rated conditions for extended periods may affect device reliability.
(2) Input pins are diode-clamped to the power-supply rails. Input signals that may swing more than 0.5 V beyond the supply rails must be current limited to 10 mA or less.
(3) Short-circuit to ground, one amplifier per package.

7.2 ESD Ratings

TLV9002S PACKAGE			VALUE	UNIT
$V_{(ESD)}$	Electrostatic discharge	Human-body model (HBM), per ANSI/ESDA/JEDEC JS-001[1]	±1500	V
		Charged-device model (CDM), per JEDEC specification JESD22-C101[2]	±1500	
ALL OTHER PACKAGES				
$V_{(ESD)}$	Electrostatic discharge	Human-body model (HBM), per ANSI/ESDA/JEDEC JS-001[1]	±2000	V
		Charged-device model (CDM), per JEDEC specification JESD22-C101[2]	±1000	

(1) JEDEC document JEP155 states that 500-V HBM allows safe manufacturing with a standard ESD control process.
(2) JEDEC document JEP157 states that 250-V CDM allows safe manufacturing with a standard ESD control process.

7.3 Recommended Operating Conditions

over operating temperature range (unless otherwise noted)

		MIN	MAX	UNIT
V_S	Supply voltage	1.8	5.5	V
T_A	Specified temperature	–40	125	°C

Copyright © 2024 Texas Instruments Incorporated

7.4 Thermal Information: TLV9001

THERMAL METRIC[1]		TLV9001				UNIT
		DBV (SOT-23)	DCK (SC70)	DPW (X2SON)	DRL (SOT-553)[2]	
		5 PINS	5 PINS	5 PINS	5 PINS	
$R_{\theta JA}$	Junction-to-ambient thermal resistance	232.9	239.6	470.0	TBD	°C/W
$R_{\theta JC(top)}$	Junction-to-case (top) thermal resistance	153.8	148.5	211.9	TBD	°C/W
$R_{\theta JB}$	Junction-to-board thermal resistance	100.9	82.3	334.8	TBD	°C/W
ψ_{JT}	Junction-to-top characterization parameter	77.2	54.5	29.8	TBD	°C/W
ψ_{JB}	Junction-to-board characterization parameter	100.4	81.8	333.2	TBD	°C/W

(1) For more information about traditional and new thermal metrics, see *Semiconductor and IC Package Thermal Metrics* .
(2) This package option for TLV9001 is preview only.

7.5 Thermal Information: TLV9001S

THERMAL METRIC[1]		TLV9001S		UNIT
		DBV (SOT-23)	DCK (SC70)	
		6 PINS	6 PINS	
$R_{\theta JA}$	Junction-to-ambient thermal resistance	232.9	215.6	°C/W
$R_{\theta JC(top)}$	Junction-to-case (top) thermal resistance	153.8	146.4	°C/W
$R_{\theta JB}$	Junction-to-board thermal resistance	100.9	72.0	°C/W
ψ_{JT}	Junction-to-top characterization parameter	77.2	55.0	°C/W
ψ_{JB}	Junction-to-board characterization parameter	100.4	71.7	°C/W

(1) For more information about traditional and new thermal metrics, see *Semiconductor and IC Package Thermal Metrics* .

7.6 Thermal Information: TLV9002

THERMAL METRIC[1]		TLV9002						UNIT
		D (SOIC)	DGK (VSSOP)	DGS (VSSOP)	DSG (WSON)	PW (TSSOP)	DDF (SOT-23)	
		8 PINS	8 PINS	10 PINS	8 PINS	8 PINS	8 PINS	
$R_{\theta JA}$	Junction-to-ambient thermal resistance	207.9	201.2	169.5	103.2	200.7	183.7	°C/W
$R_{\theta JC(top)}$	Junction-to-case (top) thermal resistance	92.8	85.7	84.1	120.1	95.4	112.5	°C/W
$R_{\theta JB}$	Junction-to-board thermal resistance	129.7	122.9	113	68.8	128.6	98.2	°C/W
ψ_{JT}	Junction-to-top characterization parameter	26	21.2	15.8	14.7	27.2	18.8	°C/W
ψ_{JB}	Junction-to-board characterization parameter	127.9	121.4	111.6	68.5	127.2	97.6	°C/W

(1) For more information about traditional and new thermal metrics, see *Semiconductor and IC Package Thermal Metrics* .

Copyright © 2024 Texas Instruments Incorporated

7.7 Thermal Information: TLV9002S

THERMAL METRIC[1]		TLV9002S			UNIT
		DGS (VSSOP)	RUG (X2QFN)	YCK (DSBGA)	
		10 PINS	10 PINS	9 PINS	
$R_{\theta JA}$	Junction-to-ambient thermal resistance	169.5	194.2	101.2	°C/W
$R_{\theta JC(top)}$	Junction-to-case (top) thermal resistance	84.1	90.3	0.9	°C/W
$R_{\theta JB}$	Junction-to-board thermal resistance	113	122.2	33.8	°C/W
ψ_{JT}	Junction-to-top characterization parameter	15.8	3.5	0.5	°C/W
ψ_{JB}	Junction-to-board characterization parameter	111.6	118.8	33.8	°C/W

(1) For more information about traditional and new thermal metrics, see *Semiconductor and IC Package Thermal Metrics* .

7.8 Thermal Information: TLV9004

THERMAL METRIC[1]		TLV9004					UNIT
		D (SOIC)	DYY (SOT-23)	PW (TSSOP)	RTE (WQFN)	RUC (X2QFN)	
		14 PINS	14 PINS	14 PINS	16 PINS	14 PINS	
$R_{\theta JA}$	Junction-to-ambient thermal resistance	102.1	154.3	148.3	66.4	205.5	°C/W
$R_{\theta JC(top)}$	Junction-to-case (top) thermal resistance	56.8	86.8	68.1	69.3	72.5	°C/W
$R_{\theta JB}$	Junction-to-board thermal resistance	58.5	67.9	92.7	41.7	150.2	°C/W
ψ_{JT}	Junction-to-top characterization parameter	20.5	10.1	16.9	5.7	3.0	°C/W
ψ_{JB}	Junction-to-board characterization parameter	58.1	67.5	91.8	41.5	149.6	°C/W

(1) For more information about traditional and new thermal metrics, see *Semiconductor and IC Package Thermal Metrics* .

7.9 Thermal Information: TLV9004S

THERMAL METRIC[1]		TLV9004S	UNIT
		RTE (WQFN)	
		16 PINS	
$R_{\theta JA}$	Junction-to-ambient thermal resistance	66.4	°C/W
$R_{\theta JC(top)}$	Junction-to-case (top) thermal resistance	69.3	°C/W
$R_{\theta JB}$	Junction-to-board thermal resistance	41.7	°C/W
ψ_{JT}	Junction-to-top characterization parameter	5.7	°C/W
ψ_{JB}	Junction-to-board characterization parameter	41.5	°C/W

(1) For more information about traditional and new thermal metrics, see *Semiconductor and IC Package Thermal Metrics* .

Copyright © 2024 Texas Instruments Incorporated

7.10 Electrical Characteristics

For V_S = (V+) – (V–) = 1.8 V to 5.5 V (±0.9 V to ±2.75 V), T_A = 25°C, R_L = 10 kΩ connected to V_S / 2, and V_{CM} = V_{OUT} = V_S / 2 (unless otherwise noted)

PARAMETER		TEST CONDITIONS	MIN	TYP	MAX	UNIT
OFFSET VOLTAGE						
V_{OS}	Input offset voltage	V_S = 5 V		±0.4	±1.6	mV
		V_S = 5 V, T_A = –40°C to 125°C			±2	
dV_{OS}/dT	V_{OS} vs temperature	T_A = –40°C to 125°C		±0.6		μV/°C
PSRR	Power-supply rejection ratio	V_S = 1.8 to 5.5 V, V_{CM} = (V–)	80	105		dB
INPUT VOLTAGE RANGE						
V_{CM}	Common-mode voltage range	No phase reversal, rail-to-rail input	(V–) – 0.1		(V+) + 0.1	V
CMRR	Common-mode rejection ratio	V_S = 1.8 V, (V–) – 0.1 V < V_{CM} < (V+) – 1.4 V, T_A = –40°C to 125°C		86		dB
		V_S = 5.5 V, (V–) – 0.1 V < V_{CM} < (V+) – 1.4 V, T_A = –40°C to 125°C		95		
		V_S = 5.5 V, (V–) – 0.1 V < V_{CM} < (V+) + 0.1 V, T_A = –40°C to 125°C	63	77		
		V_S = 1.8 V, (V–) – 0.1 V < V_{CM} < (V+) + 0.1 V, T_A = –40°C to 125°C		68		
INPUT BIAS CURRENT						
I_B	Input bias current	V_S = 5 V		±5		pA
I_{OS}	Input offset current			±2		pA
NOISE						
E_n	Input voltage noise (peak-to-peak)	f = 0.1 Hz to 10 Hz, V_S = 5 V		4.7		$μV_{PP}$
e_n	Input voltage noise density	f = 1 kHz, V_S = 5 V		30		nV/√Hz
		f = 10 kHz, V_S = 5 V		27		
i_n	Input current noise density	f = 1 kHz, V_S = 5 V		23		fA/√Hz
INPUT CAPACITANCE						
C_{ID}	Differential			1.5		pF
C_{IC}	Common-mode			5		pF
OPEN-LOOP GAIN						
A_{OL}	Open-loop voltage gain	V_S = 5.5 V, (V–) + 0.05 V < V_O < (V+) – 0.05 V, R_L = 10 kΩ	104	117		dB
		V_S = 1.8 V, (V–) + 0.04 V < V_O < (V+) – 0.04 V, R_L = 10 kΩ		100		
		V_S = 1.8 V, (V–) + 0.1 V < V_O < (V+) – 0.1 V, R_L = 2 kΩ		115		
		V_S = 5.5 V, (V–) + 0.15 V < V_O < (V+) – 0.15 V, R_L = 2 kΩ		130		
FREQUENCY RESPONSE						
GBW	Gain-bandwidth product	V_S = 5 V		1		MHz
$φ_m$	Phase margin	V_S = 5.5 V, G = 1		78		°
SR	Slew rate	V_S = 5 V		2		V/μs
t_S	Settling time	To 0.1%, V_S = 5 V, 2-V step, G = +1, C_L = 100 pF		2.5		μs
		To 0.01%, V_S = 5 V, 2-V step, G = +1, C_L = 100 pF		3		
t_{OR}	Overload recovery time	V_S = 5 V, V_{IN} × gain > V_S		0.85		μs
THD+N	Total harmonic distortion + noise	V_S = 5.5 V, V_{CM} = 2.5 V, V_O = 1 V_{RMS}, G = +1, f = 1 kHz, 80-kHz measurement BW		0.004%		
OUTPUT						
V_O	Voltage output swing from supply rails	V_S = 5.5 V, R_L = 10 kΩ		10	20	mV
		V_S = 5.5 V, R_L = 2 kΩ		35	55	
I_{SC}	Short-circuit current	V_S = 5.5 V		±40		mA
Z_O	Open-loop output impedance	V_S = 5 V, f = 1 MHz		1200		Ω

Copyright © 2024 Texas Instruments Incorporated

7.10 Electrical Characteristics (continued)

For V_S = (V+) – (V–) = 1.8 V to 5.5 V (±0.9 V to ±2.75 V), T_A = 25°C, R_L = 10 kΩ connected to V_S / 2, and V_{CM} = V_{OUT} = V_S / 2 (unless otherwise noted)

PARAMETER		TEST CONDITIONS		MIN	TYP	MAX	UNIT
POWER SUPPLY							
V_S	Specified voltage range			1.8 (±0.9)		5.5 (±2.75)	V
I_Q	Quiescent current per amplifier	TLV9002, TLV9002S TLV9004, TLV9004S	I_O = 0 mA, V_S = 5.5 V		60	75	µA
		TLV9001, TLV9001S	I_O = 0 mA, V_S = 5.5 V		60	77	
		I_O = 0 mA, V_S = 5.5 V, T_A = –40°C to 125°C				85	
SHUTDOWN(1)							
I_{QSD}	Quiescent current per amplifier	V_S = 1.8 V to 5.5 V, all amplifiers disabled, $\overline{SHDN}$ = V_S–			0.5	1.5	µA
Z_{SHDN}	Output impedance during shutdown	V_S = 1.8 V to 5.5 V, amplifier disabled			10 || 2		GΩ || pF
	High level voltage shutdown threshold (amplifier enabled)	V_S = 1.8 V to 5.5 V			(V–) + 0.9	(V–) + 1.1	V
	Low level voltage shutdown threshold (amplifier disabled)	V_S = 1.8 V to 5.5 V		(V–) + 0.2 V	(V–) + 0.7 V		V
t_{ON}	Amplifier enable time (full shutdown)	V_S = 1.8 V to 5.5 V, full shutdown; G = 1, V_{OUT} = 0.9 × V_S / 2, R_L connected to V–			70		µs
	Amplifier enable time (partial shutdown)	V_S = 1.8 V to 5.5 V, partial shutdown; G = 1, V_{OUT} = 0.9 × V_S / 2, R_L connected to V–			50		
t_{OFF}	Amplifier disable time	V_S = 1.8 V to 5.5 V, G = 1, V_{OUT} = 0.1 × V_S / 2, R_L connected to V–			4		µs
	$\overline{SHDN}$ pin input bias current (per pin)	V_S = 1.8 V to 5.5 V, V+ ≥ $\overline{SHDN}$ ≥ (V+) – 0.8 V			40		nA
		V_S = 1.8 V to 5.5 V, V– ≤ $\overline{SHDN}$ ≤ V– + 0.8 V			150		

(1) Specified by design and characterization; not production tested.

Copyright © 2024 Texas Instruments Incorporated

7.11 Typical Characteristics

at T_A = 25°C, V+ = 2.75 V, V– = –2.75 V, R_L = 10 kΩ connected to V_S / 2, V_{CM} = V_S / 2, and V_{OUT} = V_S / 2 (unless otherwise noted)

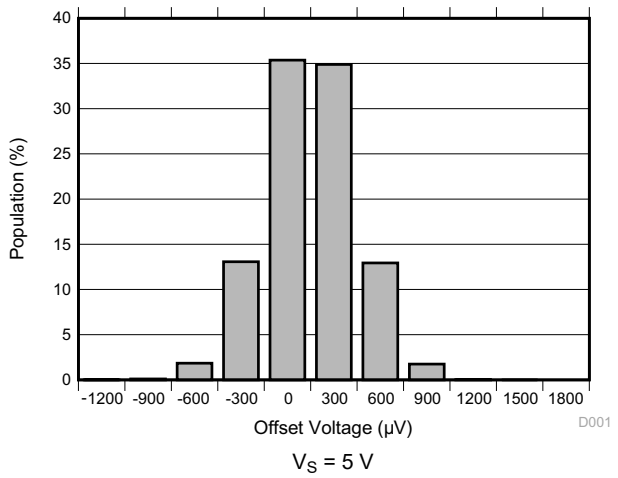

V_S = 5 V

Figure 7-1. Offset Voltage Distribution Histogram

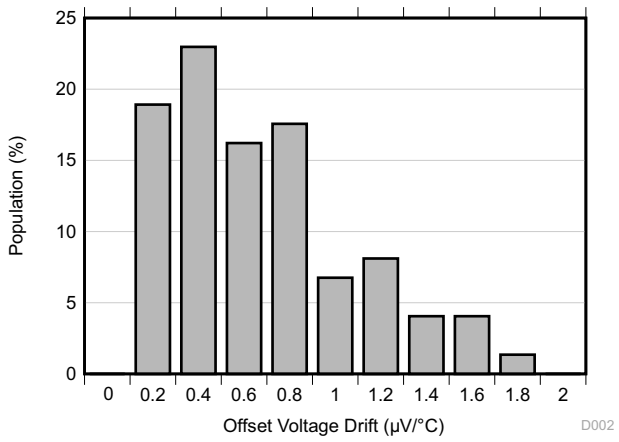

V_S = 5 V, T_A = –40°C to 125°C

Figure 7-2. Offset Voltage Drift Distribution Histogram

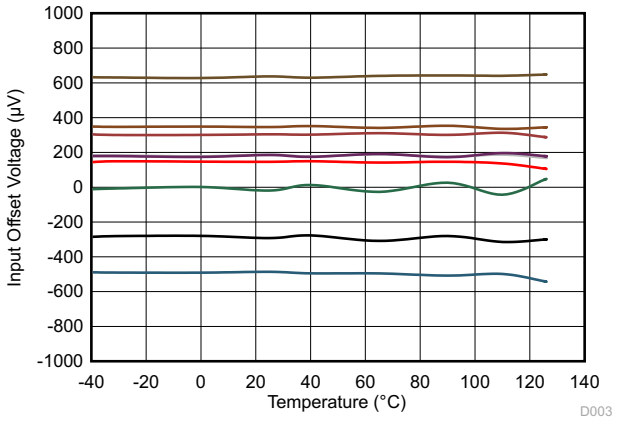

Figure 7-3. Input Offset Voltage vs Temperature

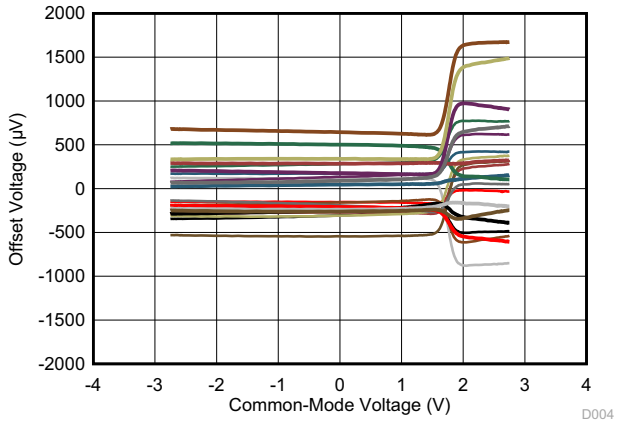

Figure 7-4. Offset Voltage vs Common-Mode

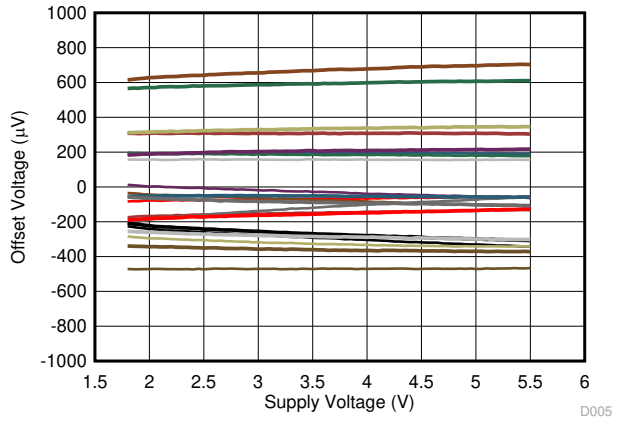

Figure 7-5. Offset Voltage vs Supply Voltage

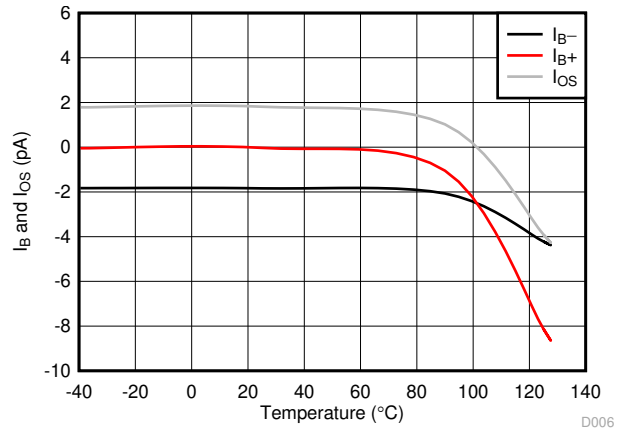

Figure 7-6. I_B and I_{OS} vs Temperature

7.11 Typical Characteristics (continued)

at T_A = 25°C, V+ = 2.75 V, V– = –2.75 V, R_L = 10 kΩ connected to V_S / 2, V_{CM} = V_S / 2, and V_{OUT} = V_S / 2 (unless otherwise noted)

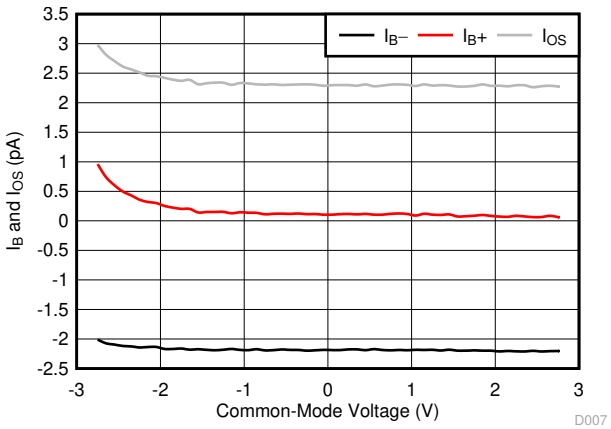

Figure 7-7. I_B and I_{OS} vs Common-Mode Voltage

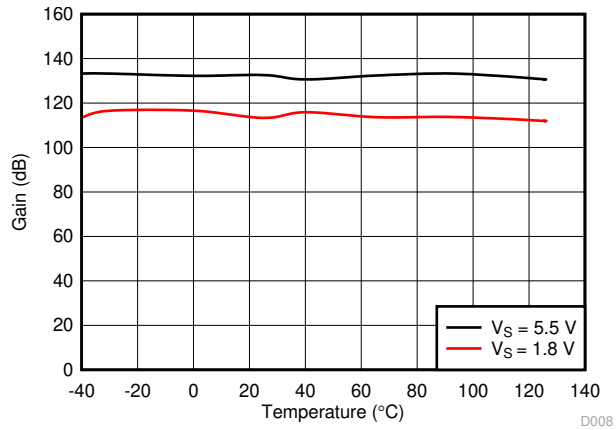

Figure 7-8. Open-Loop Gain vs Temperature

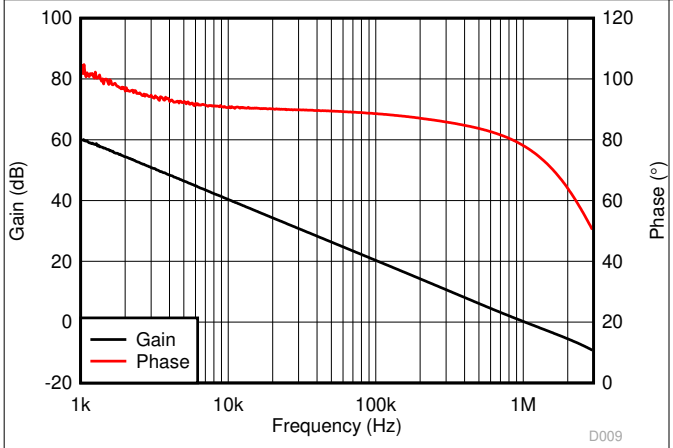

C_L = 10 pF

Figure 7-9. Open-Loop Gain and Phase vs Frequency

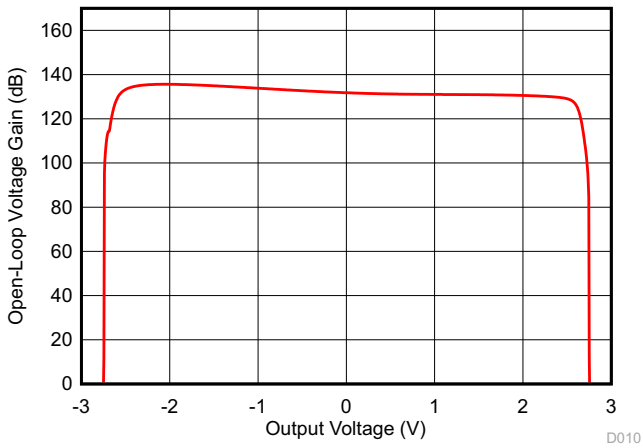

Figure 7-10. Open-Loop Gain vs Output Voltage

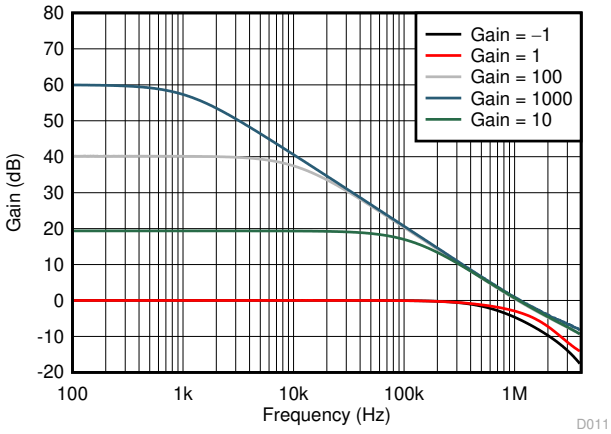

C_L = 10 pF

Figure 7-11. Closed-Loop Gain vs Frequency

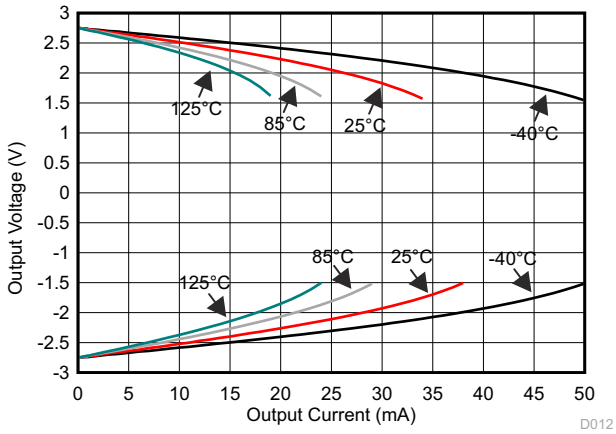

Figure 7-12. Output Voltage vs Output Current (Claw)

Copyright © 2024 Texas Instruments Incorporated

7.11 Typical Characteristics (continued)

at T_A = 25°C, V+ = 2.75 V, V– = –2.75 V, R_L = 10 kΩ connected to V_S / 2, V_{CM} = V_S / 2, and V_{OUT} = V_S / 2 (unless otherwise noted)

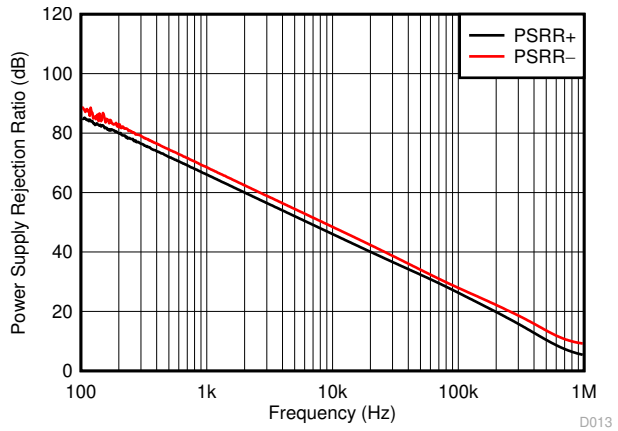

Figure 7-13. PSRR vs Frequency

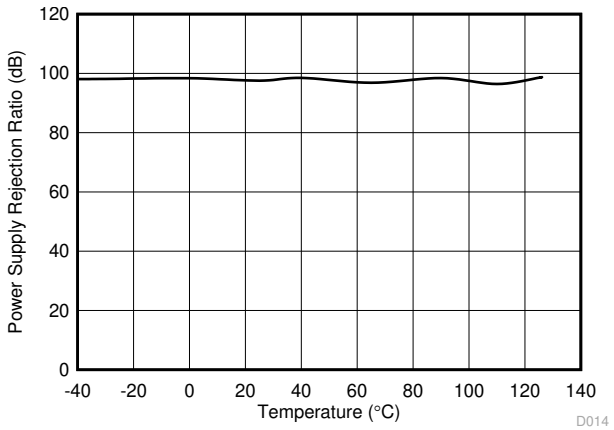

V_S = 1.8 V to 5.5 V

Figure 7-14. DC PSRR vs Temperature

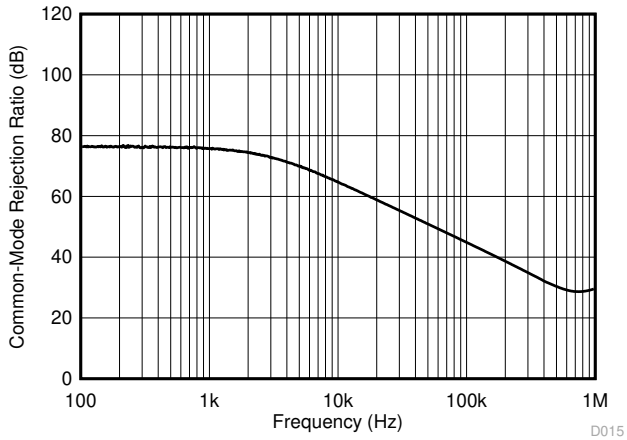

Figure 7-15. CMRR vs Frequency

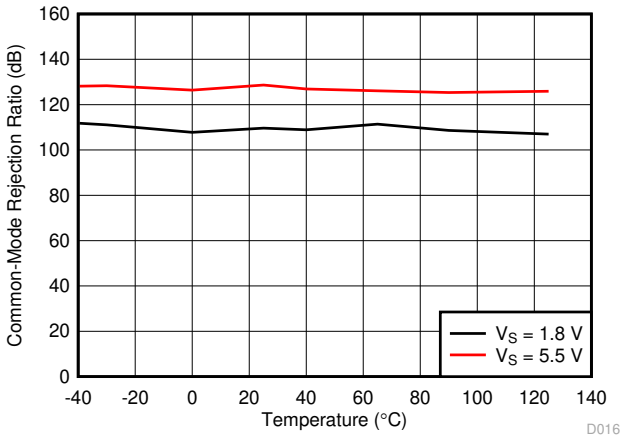

V_{CM} = (V–) – 0.1 V to (V+) – 1.4 V

Figure 7-16. DC CMRR vs Temperature

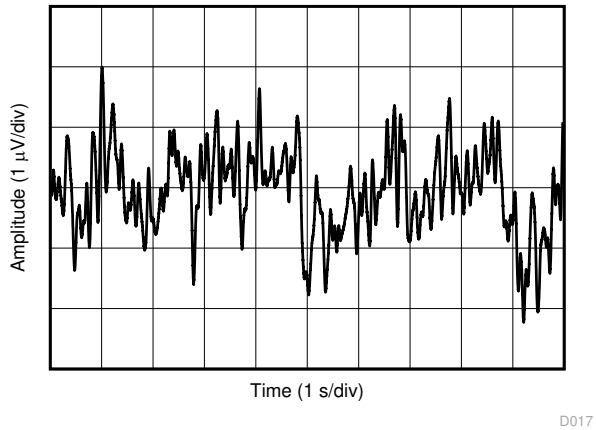

Figure 7-17. 0.1-Hz to 10-Hz Integrated Voltage Noise

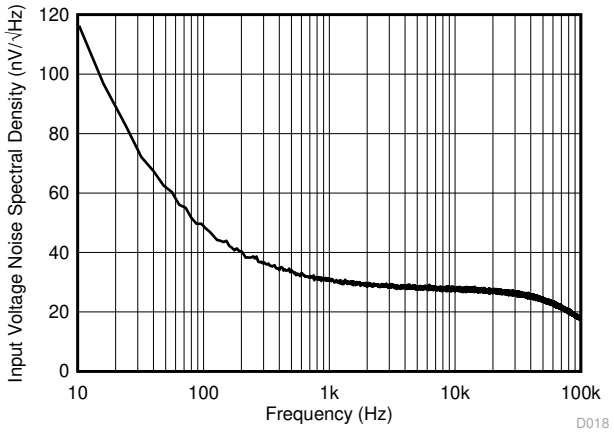

Figure 7-18. Input Voltage Noise Spectral Density

7.11 Typical Characteristics (continued)

at T_A = 25°C, V+ = 2.75 V, V– = –2.75 V, R_L = 10 kΩ connected to V_S / 2, V_{CM} = V_S / 2, and V_{OUT} = V_S / 2 (unless otherwise noted)

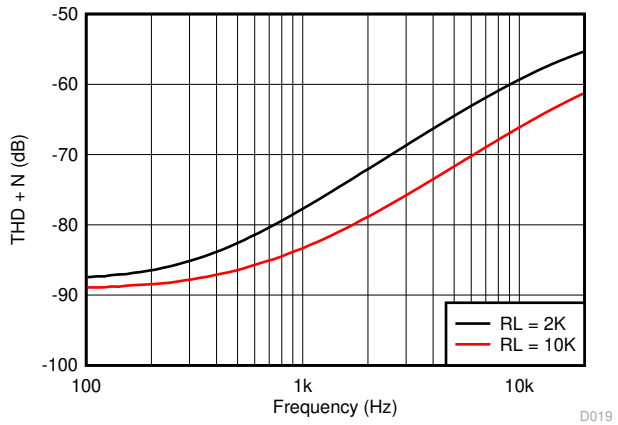

V_S = 5.5 V V_{CM} = 2.5 V G = 1
BW = 80 kHz V_{OUT} = 0.5 V_{RMS}

Figure 7-19. THD + N vs Frequency

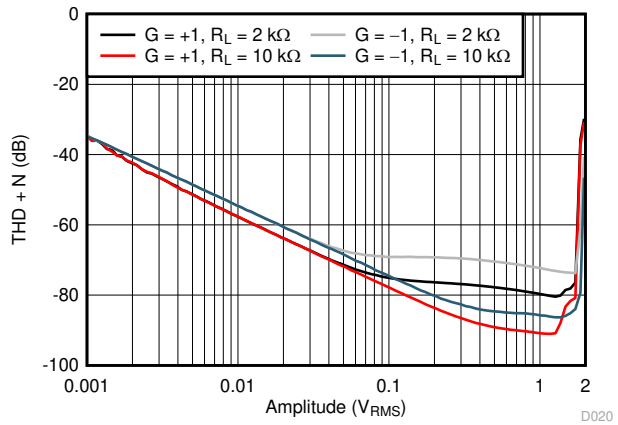

V_S = 5.5 V V_{CM} = 2.5 V f = 1 kHz
G = 1 BW = 80 kHz

Figure 7-20. THD + N vs Amplitude

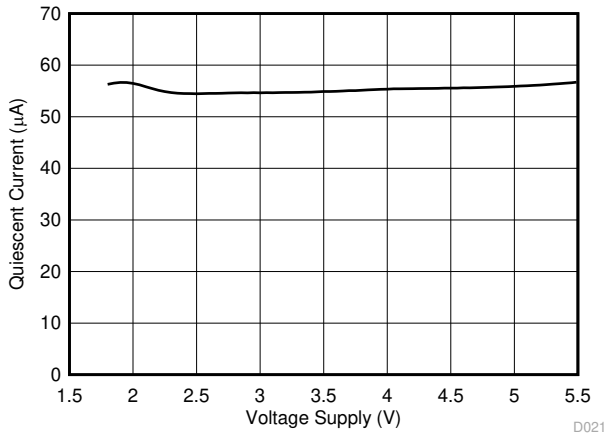

Figure 7-21. Quiescent Current vs Supply Voltage

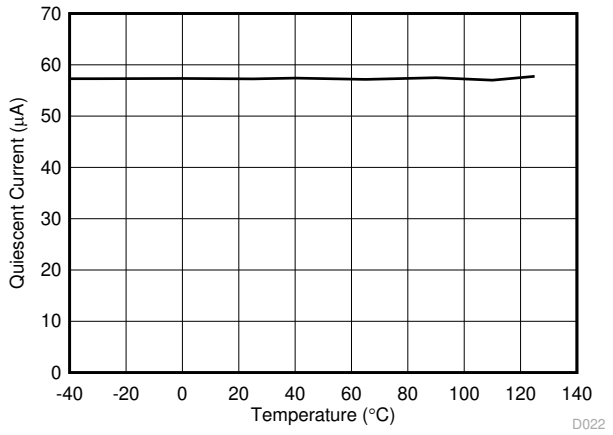

Figure 7-22. Quiescent Current vs Temperature

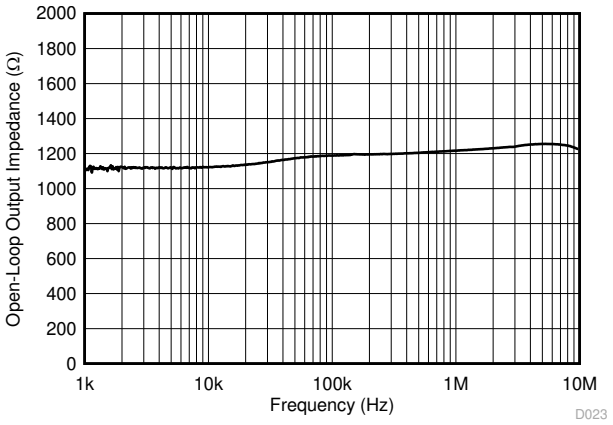

Figure 7-23. Open-Loop Output Impedance vs Frequency

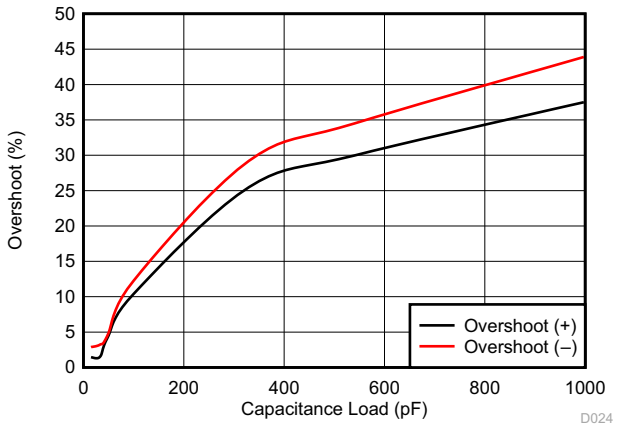

G = 1 V_{IN} = 100 mVpp

Figure 7-24. Small Signal Overshoot vs Capacitive Load

Copyright © 2024 Texas Instruments Incorporated

7.11 Typical Characteristics (continued)

at T_A = 25°C, V+ = 2.75 V, V– = –2.75 V, R_L = 10 kΩ connected to V_S / 2, V_{CM} = V_S / 2, and V_{OUT} = V_S / 2 (unless otherwise noted)

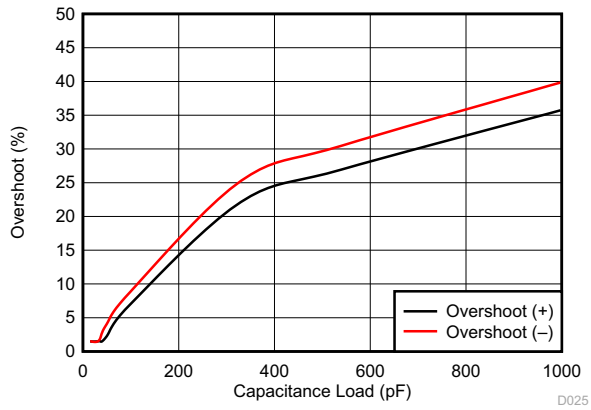

G = –1 V_{IN} = 100 mVpp

Figure 7-25. Small Signal Overshoot vs Capacitive Load

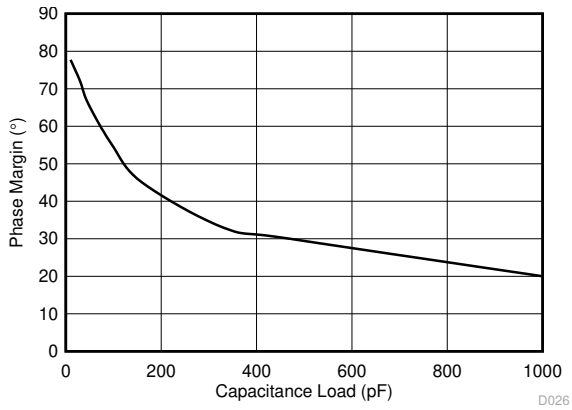

Figure 7-26. Phase Margin vs Capacitive Load

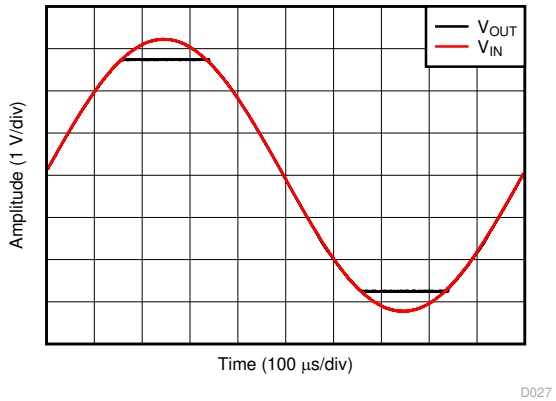

G = 1 V_{IN} = 6.5 V_{PP}

Figure 7-27. No Phase Reversal

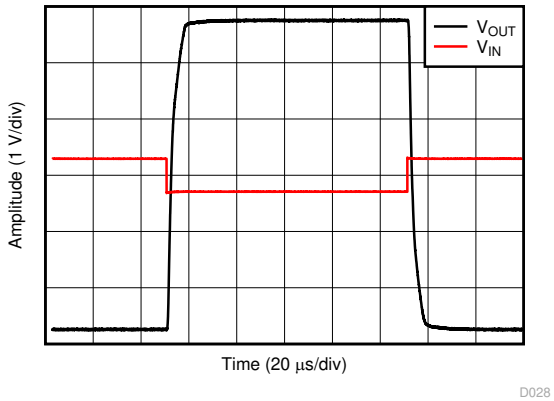

G = –10 V_{IN} = 600 mV_{PP}

Figure 7-28. Overload Recovery

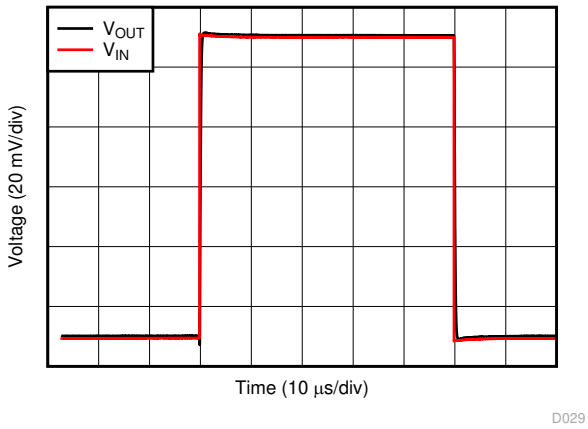

G = 1 V_{IN} = 100 mV_{PP} C_L = 10 pF

Figure 7-29. Small-Signal Step Response

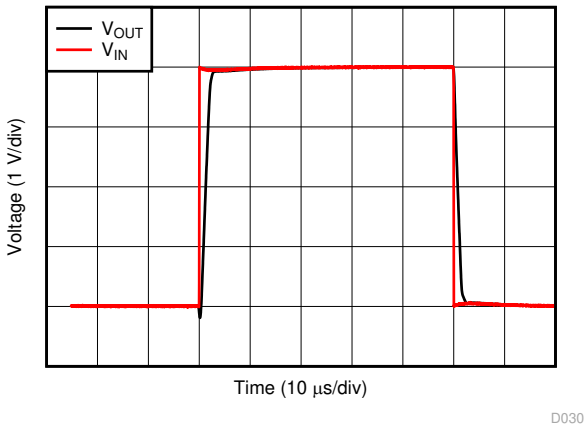

G = 1 V_{IN} = 4 V_{PP} C_L = 10 pF

Figure 7-30. Large-Signal Step Response

7.11 Typical Characteristics (continued)

at T_A = 25°C, V+ = 2.75 V, V– = –2.75 V, R_L = 10 kΩ connected to V_S / 2, V_{CM} = V_S / 2, and V_{OUT} = V_S / 2 (unless otherwise noted)

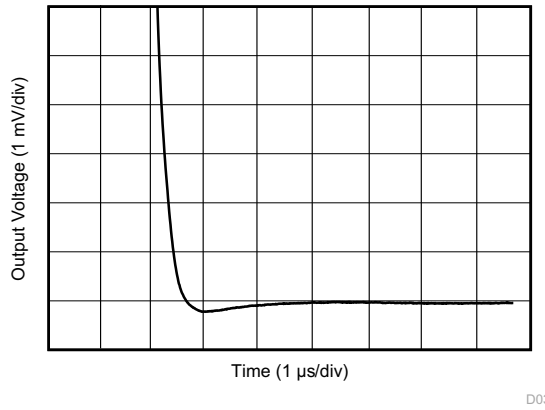

G = 1 C_L = 100 pF 2-V step

Figure 7-31. Large-Signal Settling Time (Negative)

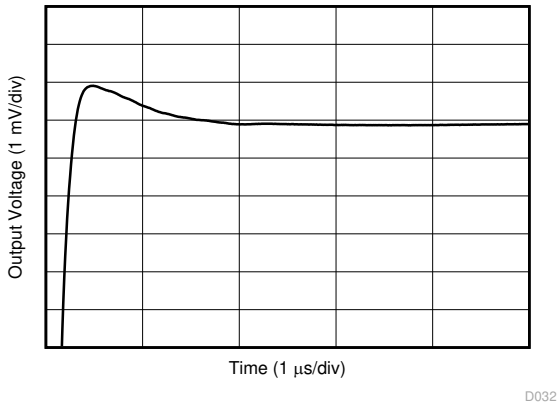

G = 1 C_L = 100 pF 2-V step

Figure 7-32. Large-Signal Settling Time (Positive)

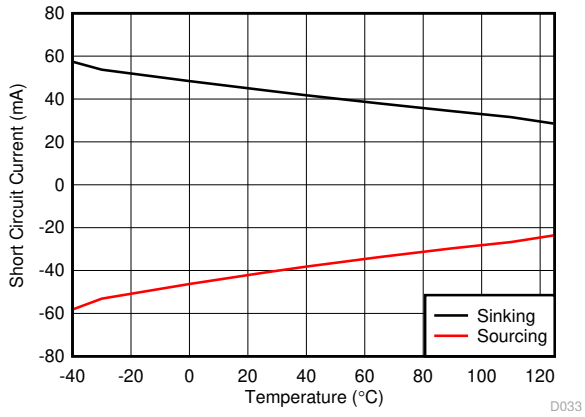

Figure 7-33. Short-Circuit Current vs Temperature

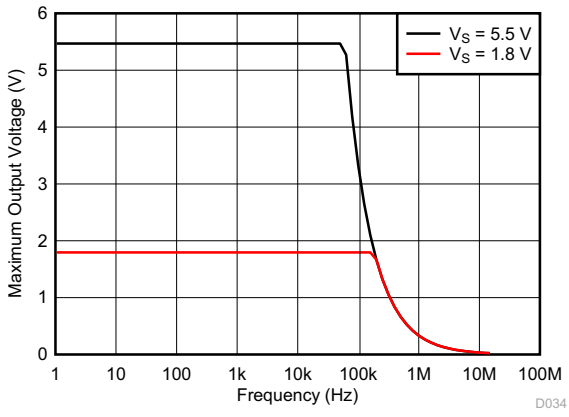

Figure 7-34. Maximum Output Voltage vs Frequency

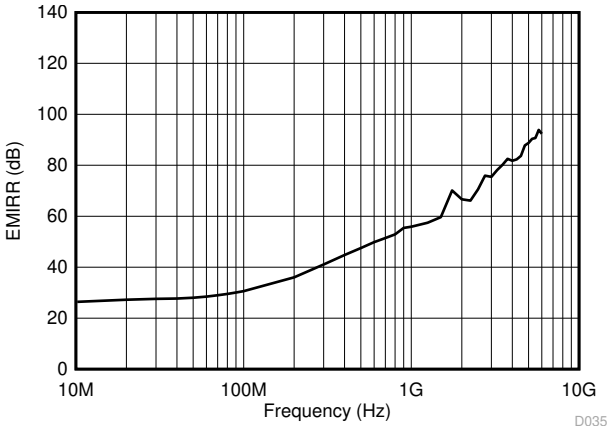

Figure 7-35. Electromagnetic Interference Rejection Ratio Referred to Noninverting Input (EMIRR+) vs Frequency

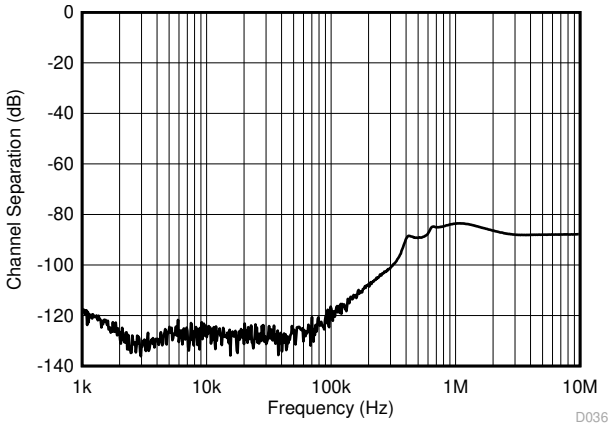

Figure 7-36. Channel Separation

Copyright © 2024 Texas Instruments Incorporated

8 Detailed Description

8.1 Overview

The TLV900x is a family of low-power, rail-to-rail input and output op amps. These devices operate from 1.8 V to 5.5 V, are unity-gain stable, and are designed for a wide range of general-purpose applications. The input common-mode voltage range includes both rails and allows the TLV900x family to be used in virtually any single-supply application. Rail-to-rail input and output swing significantly increases dynamic range, especially in low-supply applications, and makes them suitable for driving sampling analog-to-digital converters (ADCs).

8.2 Functional Block Diagram

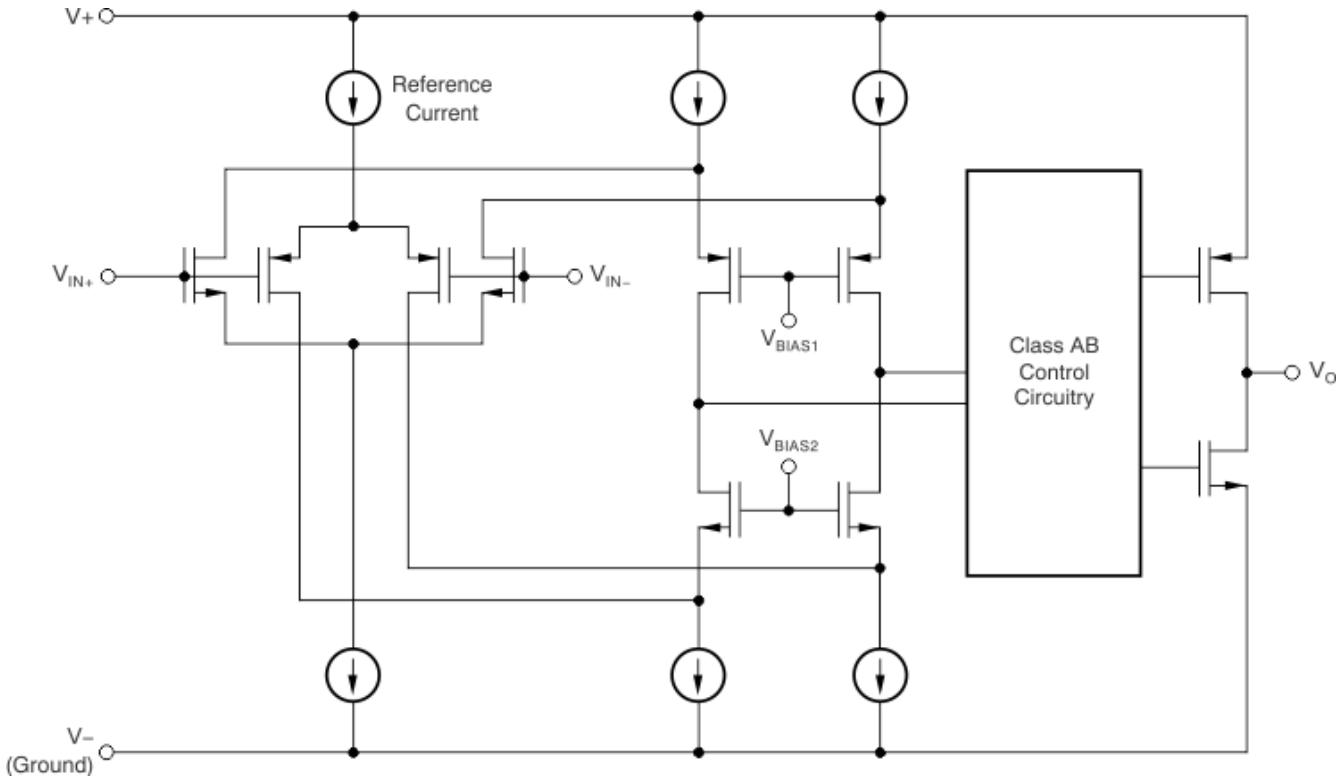

8.3 Feature Description

8.3.1 Operating Voltage

The TLV900x family of op amps are for operation from 1.8 V to 5.5 V. In addition, many specifications such as input offset voltage, quiescent current, offset current, and short circuit current apply from –40°C to 125°C. Parameters that vary significantly with operating voltages or temperature are shown in Section 7.11.

8.3.2 Rail-to-Rail Input

The input common-mode voltage range of the TLV900x family extends 100 mV beyond the supply rails for the full supply voltage range of 1.8 V to 5.5 V. This performance is achieved with a complementary input stage: an N-channel input differential pair in parallel with a P-channel differential pair, as shown in Section 8.2. The N-channel pair is active for input voltages close to the positive rail, typically (V+) – 1.4 V to 100 mV above the positive supply, whereas the P-channel pair is active for inputs from 100 mV below the negative supply to approximately (V+) – 1.4 V. There is a small transition region, typically (V+) – 1.2 V to (V+) – 1 V, in which both pairs are on. This 100-mV transition region can vary up to 100 mV with process variation. Thus, the transition region (with both stages on) can range from (V+) – 1.4 V to (V+) – 1.2 V on the low end, and up to (V+) – 1 V to (V+) – 0.8 V on the high end. Within this transition region, PSRR, CMRR, offset voltage, offset drift, and THD can degrade compared to device operation outside this region.

8.3.3 Rail-to-Rail Output

Designed as a low-power, low-voltage operational amplifier, the TLV900x family delivers a robust output drive capability. A class-AB output stage with common-source transistors achieves full rail-to-rail output swing capability. For resistive loads of 10 kΩ, the output swings to within 20 mV of either supply rail, regardless of the applied power-supply voltage. Different load conditions change the ability of the amplifier to swing close to the rails.

8.3.4 EMI Rejection

The TLV900x uses integrated electromagnetic interference (EMI) filtering to reduce the effects of EMI from sources such as wireless communications and densely-populated boards with a mix of analog signal chain and digital components. EMI immunity can be improved with circuit design techniques; the TLV900x benefits from these design improvements. Texas Instruments has developed the ability to accurately measure and quantify the immunity of an operational amplifier over a broad frequency spectrum extending from 10 MHz to 6 GHz. Figure 8-1 shows the results of this testing on the TLV900x. Table 8-1 shows the EMIRR IN+ values for the TLV900x at particular frequencies commonly encountered in real-world applications. The *EMI Rejection Ratio of Operational Amplifiers* application report contains detailed information on the topic of EMIRR performance as it relates to op amps and is available for download from www.ti.com.

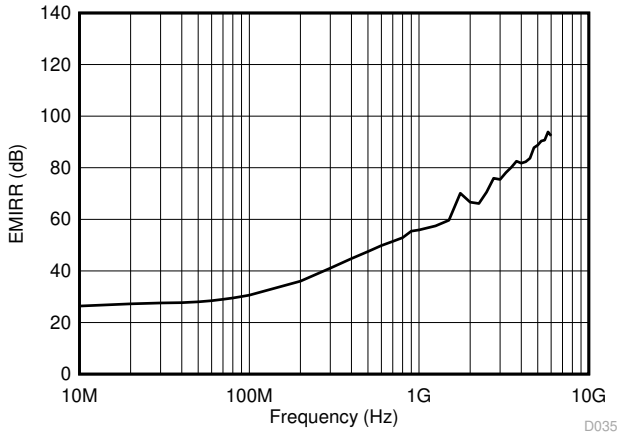

Figure 8-1. EMIRR Testing

Copyright © 2024 Texas Instruments Incorporated

Table 8-1. TLV900x EMIRR IN+ For Frequencies of Interest

FREQUENCY	APPLICATION OR ALLOCATION	EMIRR IN+
400 MHz	Mobile radio, mobile satellite, space operation, weather, radar, ultra-high frequency (UHF) applications	59.5 dB
900 MHz	Global system for mobile communications (GSM) applications, radio communication, navigation, GPS (to 1.6 GHz), GSM, aeronautical mobile, UHF applications	68.9 dB
1.8 GHz	GSM applications, mobile personal communications, broadband, satellite, L-band (1 GHz to 2 GHz)	77.8 dB
2.4 GHz	802.11b, 802.11g, 802.11n, Bluetooth®, mobile personal communications, industrial, scientific and medical (ISM) radio band, amateur radio and satellite, S-band (2 GHz to 4 GHz)	78.0 dB
3.6 GHz	Radiolocation, aero communication and navigation, satellite, mobile, S-band	88.8 dB

8.4 Overload Recovery

Overload recovery is defined as the time required for the operational amplifier output to recover from a saturated state to a linear state. The output devices of the operational amplifier enter a saturation region when the output voltage exceeds the rated operating voltage, because of the high input voltage or the high gain. After the device enters the saturation region, the charge carriers in the output devices require time to return to the linear state. After the charge carriers return to the linear state, the device begins to slew at the specified slew rate. Therefore, the propagation delay (in case of an overload condition) is the sum of the overload recovery time and the slew time. The overload recovery time for the TLV900x family is approximately 850 ns.

8.5 Shutdown

The TLV9001S, TLV9002S, and TLV9004S devices feature $\overline{\text{SHDN}}$ pins that disable the op amp, placing it into a low-power standby mode. In this mode, the op amp typically consumes less than 1 µA. The $\overline{\text{SHDN}}$ pins are active low, meaning that shutdown mode is enabled when the input to the $\overline{\text{SHDN}}$ pin is a valid logic low.

The $\overline{\text{SHDN}}$ pins are referenced to the negative supply voltage of the op amp. The threshold of the shutdown feature lies around 620 mV (typical) and does not change with respect to the supply voltage. Hysteresis has been included in the switching threshold to ensure smooth switching characteristics. To ensure optimal shutdown behavior, the $\overline{\text{SHDN}}$ pins should be driven with valid logic signals. A valid logic low is defined as a voltage between V– and V– + 0.2 V. A valid logic high is defined as a voltage between V– + 1.2 V and V+. The shutdown pin circuitry includes a pull-up resistor, which will inherently pull the voltage of the pin to the positive supply rail if not driven. Thus, to enable the amplifier, the $\overline{\text{SHDN}}$ pins should either be left floating or driven to a valid logic high. To disable the amplifier, the $\overline{\text{SHDN}}$ pins must be driven to a valid logic low. While we highly recommend that the shutdown pin be connected to a valid high or a low voltage or driven, we have included a pull-up resistor connected to VCC. The maximum voltage allowed at the $\overline{\text{SHDN}}$ pins is (V+) + 0.5 V. Exceeding this voltage level will damage the device.

The $\overline{\text{SHDN}}$ pins are high-impedance CMOS inputs. Dual op amp versions are independently controlled and quad op amp versions are controlled in pairs with logic inputs. For battery-operated applications, this feature may be used to greatly reduce the average current and extend battery life. The enable time is 70 µs for full shutdown of all channels; disable time is 4 µs. When disabled, the output assumes a high-impedance state. This architecture allows the TLV9002S and TLV9004S to operate as a gated amplifier (or to have the device output multiplexed onto a common analog output bus). Shutdown time (t_{OFF}) depends on loading conditions and increases as load resistance increases. To ensure shutdown (disable) within a specific shutdown time, the specified 10-kΩ load to midsupply (V_S / 2) is required. If using the TLV9001S, TLV9002S, or TLV9004S without a load, the resulting turnoff time significantly increases.

8.6 Device Functional Modes

The TLV900x family has a single functional mode. The devices are powered on as long as the power-supply voltage is between 1.8 V (±0.9 V) and 5.5 V (±2.75 V).

Copyright © 2024 Texas Instruments Incorporated

9 Application and Implementation

Note

Information in the following applications sections is not part of the TI component specification, and TI does not warrant its accuracy or completeness. TI's customers are responsible for determining suitability of components for their purposes. Customers should validate and test their design implementation to confirm system functionality.

9.1 Application Information

The TLV900x family of low-power, rail-to-rail input and output operational amplifiers is specifically designed for portable applications. The devices operate from 1.8 V to 5.5 V, are unity-gain stable, and are suitable for a wide range of general-purpose applications. The class AB output stage is capable of driving less than or equal to 10-kΩ loads connected to any point between V+ and V–. The input common-mode voltage range includes both rails, and allows the TLV900x devices to be used in any single-supply application.

9.2 Typical Application

9.2.1 TLV900x Low-Side, Current Sensing Application

Figure 9-1 shows the TLV900x configured in a low-side current sensing application.

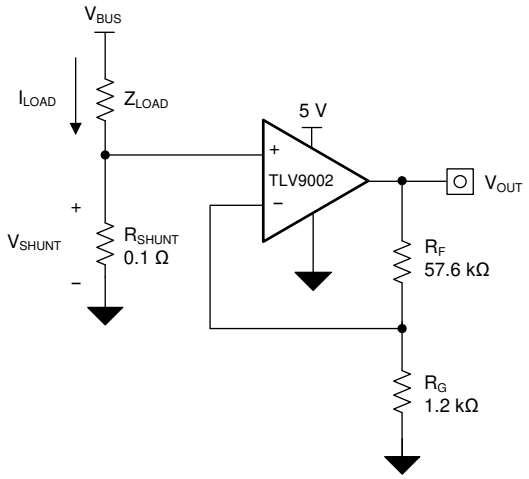

Figure 9-1. TLV900x in a Low-Side, Current-Sensing Application

Copyright © 2024 Texas Instruments Incorporated

9.2.1.1 Design Requirements

The design requirements for this design are:

- Load current: 0 A to 1 A
- Output voltage: 4.9 V
- Maximum shunt voltage: 100 mV

9.2.1.2 Detailed Design Procedure

The transfer function of the circuit in Figure 9-1 is given in Equation 1.

$$V_{OUT} = I_{LOAD} \times R_{SHUNT} \times Gain \tag{1}$$

The load current (I_{LOAD}) produces a voltage drop across the shunt resistor (R_{SHUNT}). The load current is set from 0 A to 1 A. To keep the shunt voltage below 100 mV at maximum load current, the largest shunt resistor is shown using Equation 2.

$$R_{SHUNT} = \frac{V_{SHUNT_MAX}}{I_{LOAD_MAX}} = \frac{100mV}{1A} = 100m\Omega \tag{2}$$

Using Equation 2, R_{SHUNT} is calculated to be 100 mΩ. The voltage drop produced by I_{LOAD} and R_{SHUNT} is amplified by the TLV900x to produce an output voltage of approximately 0 V to 4.9 V. The gain needed by the TLV900x to produce the necessary output voltage is calculated using Equation 3.

$$Gain = \frac{\left(V_{OUT_MAX} - V_{OUT_MIN}\right)}{\left(V_{IN_MAX} - V_{IN_MIN}\right)} \tag{3}$$

Using Equation 3, the required gain is calculated to be 49 V/V, which is set with resistors R_F and R_G. Equation 4 sizes the resistors R_F and R_G, to set the gain of the TLV900x to 49 V/V.

$$Gain = 1 + \frac{\left(R_F\right)}{\left(R_G\right)} \tag{4}$$

Selecting R_F as 57.6 kΩ and R_G as 1.2 kΩ provides a combination that equals 49 V/V. Figure 9-2 shows the measured transfer function of the circuit shown in Figure 9-1. Notice that the gain is only a function of the feedback and gain resistors. This gain is adjusted by varying the ratio of the resistors and the actual resistors values are determined by the impedance levels that the designer wants to establish. The impedance level determines the current drain, the effect that stray capacitance has, and a few other behaviors. There is no optimal impedance selection that works for every system, you must choose an impedance that is ideal for your system parameters.

Copyright © 2024 Texas Instruments Incorporated

9.2.1.3 Application Curve

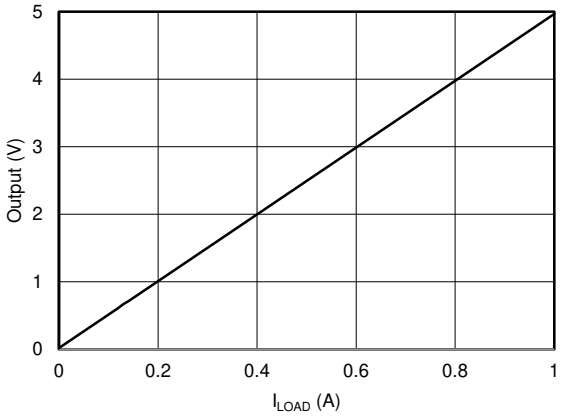

Figure 9-2. Low-Side, Current-Sense Transfer Function

Copyright © 2024 Texas Instruments Incorporated

9.2.2 Single-Supply Photodiode Amplifier

Photodiodes are used in many applications to convert light signals to electrical signals. The current through the photodiode is proportional to the photon energy absorbed, and is commonly in the range of a few hundred picoamps to a few tens of microamps. An amplifier in a transimpedance configuration is typically used to convert the low-level photodiode current to a voltage signal for processing in an MCU. The circuit shown in Figure 9-3 is an example of a single-supply photodiode amplifier circuit using the TLV9002.

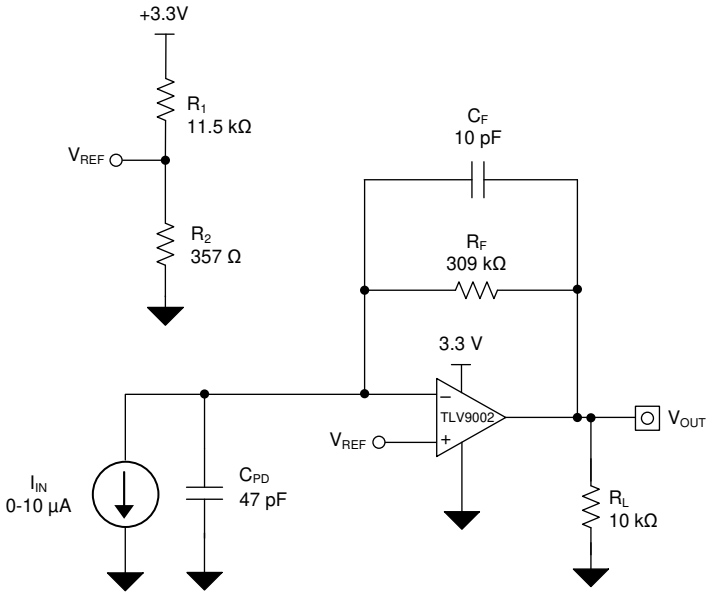

Figure 9-3. Single-Supply Photodiode Amplifier Circuit

9.2.2.1 Design Requirements

The design requirements for this design are:

- Supply voltage: 3.3 V
- Input: 0 µA to 10 µA
- Output: 0.1 V to 3.2 V
- Bandwidth: 50 kHz

9.2.2.2 Detailed Design Procedure

The transfer function between the output voltage (V_{OUT}), the input current, (I_{IN}) and the reference voltage (V_{REF}) is defined in Equation 5.

$$V_{OUT} = I_{IN} \times R_F + V_{REF} \tag{5}$$

Where:

$$V_{REF} = V_+ \times \left(\frac{R_1 \times R_2}{R_1 + R_2}\right) \tag{6}$$

Set V_{REF} to 100 mV to meet the minimum output voltage level by setting R1 and R2 to meet the required ratio calculated in Equation 7.

$$\frac{V_{REF}}{V_+} = \frac{0.1\ \text{V}}{3.3\ \text{V}} = 0.0303 \tag{7}$$

The closest resistor ratio to meet this ratio sets R1 to 11.5 kΩ and R2 to 357 Ω.

The required feedback resistance can be calculated based on the input current and desired output voltage.

$$R_F = \frac{V_{OUT} - V_{REF}}{I_{IN}} = \frac{3.2\ \text{V} - 0.1\ \text{V}}{10\ \mu\text{A}} = 310\frac{\text{kV}}{\text{A}} \approx 309\ \text{k}\Omega \tag{8}$$

Calculate the value for the feedback capacitor based on R_F and the desired –3-dB bandwidth, (f_{-3dB}) using Equation 9.

$$C_F = \frac{1}{2 \times \pi \times R_F \times f_{-3dB}} = \frac{1}{2 \times \pi \times 309\ \text{k}\Omega \times 50\ \text{kHz}} = 10.3\ \text{pF} \approx 10\ \text{pF} \tag{9}$$

The minimum op amp bandwidth required for this application is based on the value of R_F, C_F, and the capacitance on the INx– pin of the TLV9002 which is equal to the sum of the photodiode shunt capacitance, (CPD) the common-mode input capacitance, (CCM) and the differential input capacitance (CD) as Equation 10 shows.

$$C_{IN} = C_{PD} + C_{CM} + C_D = 47\ \text{pF} + 5\ \text{pF} + 1\ \text{pF} = 53\ \text{pF} \tag{10}$$

The minimum op amp bandwidth is calculated in Equation 11.

$$f_{=BGW} \geq \frac{C_{IN} + C_F}{2 \times \pi \times R_F \times C_F^{\,2}} \geq 324\ \text{kHz} \tag{11}$$

The 1-MHz bandwidth of the TLV900x meets the minimum bandwidth requirement and remains stable in this application configuration.

Copyright © 2024 Texas Instruments Incorporated

9.2.2.3 Application Curves

The measured current-to-voltage transfer function for the photodiode amplifier circuit is shown in Figure 9-4. The measured performance of the photodiode amplifier circuit is shown in Figure 9-5.

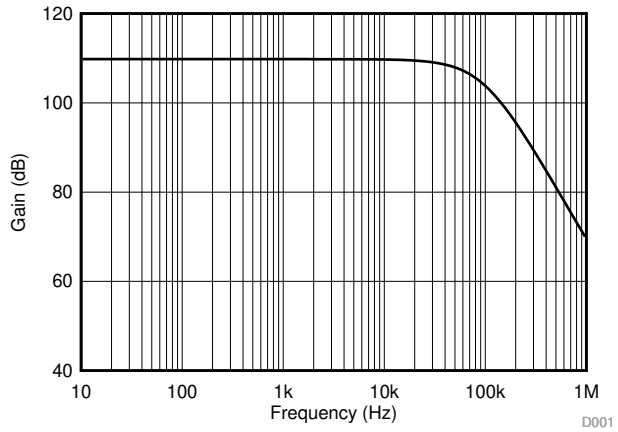

Figure 9-4. Photodiode Amplifier Circuit AC Gain Results

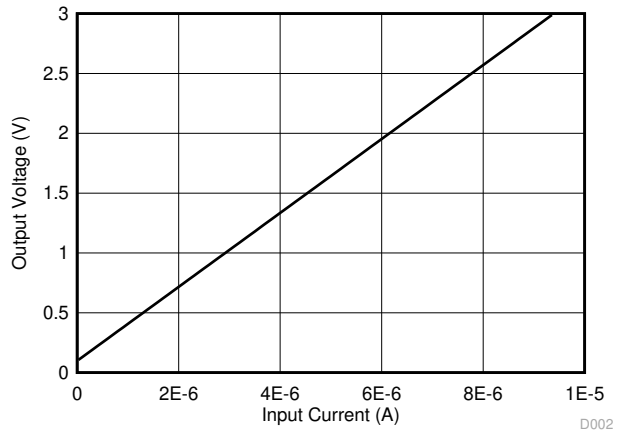

Figure 9-5. Photodiode Amplifier Circuit DC Results

10 Power Supply Recommendations

The TLV900x family is specified for operation from 1.8 V to 5.5 V (±0.9 V to ±2.75 V); many specifications apply from –40°C to 125°C. Section 7.11 presents parameters that may exhibit significant variance with regard to operating voltage or temperature.

CAUTION

Supply voltages larger than 6 V may permanently damage the device; see Section 7.1.

Place 0.1-µF bypass capacitors close to the power-supply pins to reduce coupling errors from noisy or high-impedance power supplies. For more detailed information on bypass capacitor placement, see Section 11.1.

10.1 Input and ESD Protection

The TLV900x family incorporates internal ESD protection circuits on all pins. For input and output pins, this protection primarily consists of current-steering diodes connected between the input and power-supply pins. These ESD protection diodes provide in-circuit, input overdrive protection, as long as the current is limited to 10 mA. Figure 10-1 shows how a series input resistor can be added to the driven input to limit the input current. The added resistor contributes thermal noise at the amplifier input and the value must be kept to a minimum in noise-sensitive applications.

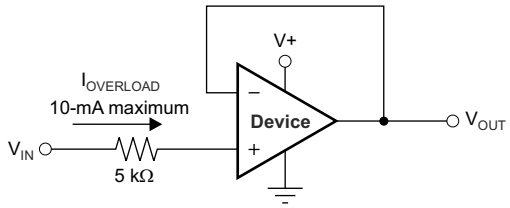

Figure 10-1. Input Current Protection

Copyright © 2024 Texas Instruments Incorporated

11 Layout

11.1 Layout Guidelines

For best operational performance of the device, use good printed circuit board (PCB) layout practices, including:

- Noise can propagate into analog circuitry through the power connections of the board and propagate to the power pins of the op amp itself. Bypass capacitors are used to reduce the coupled noise by providing a low-impedance path to ground.
  - Connect low-ESR, 0.1-µF ceramic bypass capacitors between each supply pin and ground, placed as close to the device as possible. A single bypass capacitor from V+ to ground is adequate for single-supply applications.
- Separate grounding for analog and digital portions of circuitry is one of the simplest and most effective methods of noise suppression. One or more layers on multilayer PCBs are usually devoted to ground planes. A ground plane helps distribute heat and reduces electromagnetic interference (EMI) noise pickup. Take care to physically separate digital and analog grounds, paying attention to the flow of the ground current.
- To reduce parasitic coupling, run the input traces as far away from the supply or output traces as possible. If these traces cannot be kept separate, crossing the sensitive trace at a 90 degree angle is much better as opposed to running the traces in parallel with the noisy trace.
- Place the external components as close to the device as possible, as shown in Figure 11-2. Keeping R_F and R_G close to the inverting input minimizes parasitic capacitance.
- Keep the length of input traces as short as possible. Remember that the input traces are the most sensitive part of the circuit.
- Consider a driven, low-impedance guard ring around the critical traces. A guard ring may significantly reduce leakage currents from nearby traces that are at different potentials.
- Cleaning the PCB following board assembly is recommended for best performance.
- Any precision integrated circuit can experience performance shifts resulting from moisture ingress into the plastic package. Following any aqueous PCB cleaning process, baking the PCB assembly is recommended to remove moisture introduced into the device packaging during the cleaning process. A low-temperature, post-cleaning bake at 85°C for 30 minutes is sufficient for most circumstances.

11.2 Layout Example

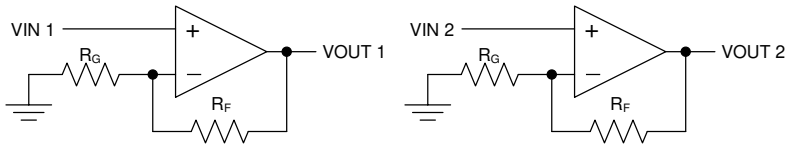

Figure 11-1. Schematic Representation

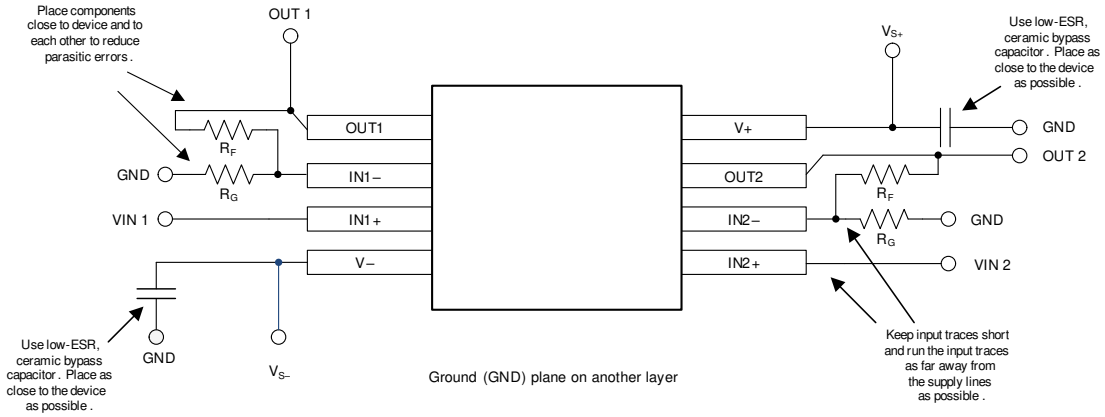

Figure 11-2. Layout Example

12 Device and Documentation Support

12.1 Documentation Support

12.1.1 Related Documentation

For related documentation, see the following:

- Texas Instruments, *EMI Rejection Ratio of Operational Amplifiers*

12.2 Receiving Notification of Documentation Updates

To receive notification of documentation updates, navigate to the device product folder on ti.com. Click on *Subscribe to updates* to register and receive a weekly digest of any product information that has changed. For change details, review the revision history included in any revised document.

12.3 Support Resources

TI E2E™ support forums are an engineer's go-to source for fast, verified answers and design help — straight from the experts. Search existing answers or ask your own question to get the quick design help you need.

Linked content is provided "AS IS" by the respective contributors. They do not constitute TI specifications and do not necessarily reflect TI's views; see TI's Terms of Use.

12.4 Trademarks

TI E2E™ is a trademark of Texas Instruments.
Bluetooth® is a registered trademark of Bluetooth SIG, Inc.
All trademarks are the property of their respective owners.

12.5 Electrostatic Discharge Caution

This integrated circuit can be damaged by ESD. Texas Instruments recommends that all integrated circuits be handled with appropriate precautions. Failure to observe proper handling and installation procedures can cause damage.

ESD damage can range from subtle performance degradation to complete device failure. Precision integrated circuits may be more susceptible to damage because very small parametric changes could cause the device not to meet its published specifications.

12.6 Glossary

TI Glossary	This glossary lists and explains terms, acronyms, and definitions.

13 Mechanical, Packaging, and Orderable Information

The following pages include mechanical, packaging, and orderable information. This information is the most-current data available for the designated devices. This data is subject to change without notice and without revision of this document. For browser-based versions of this data sheet, see the left-hand navigation pane.

Copyright © 2024 Texas Instruments Incorporated

PACKAGE OUTLINE

YCK0009-C01

DSBGA - 0.33 mm max height

DIE SIZE BALL GRID ARRAY

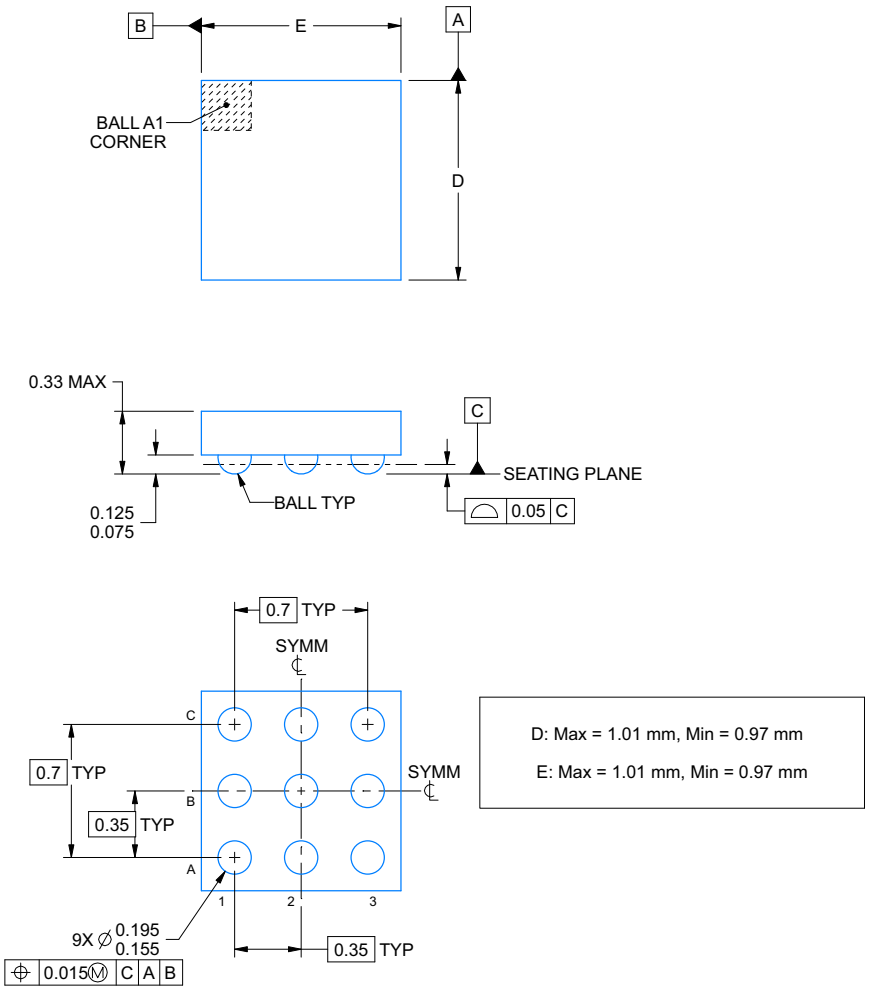

NOTES:

1. All linear dimensions are in millimeters. Any dimensions in parenthesis are for reference only. Dimensioning and tolerancing per ASME Y14.5M.
2. This drawing is subject to change without notice.

Copyright © 2024 Texas Instruments Incorporated

EXAMPLE BOARD LAYOUT

YCK0009-C01

DSBGA - 0.33 mm max height

DIE SIZE BALL GRID ARRAY

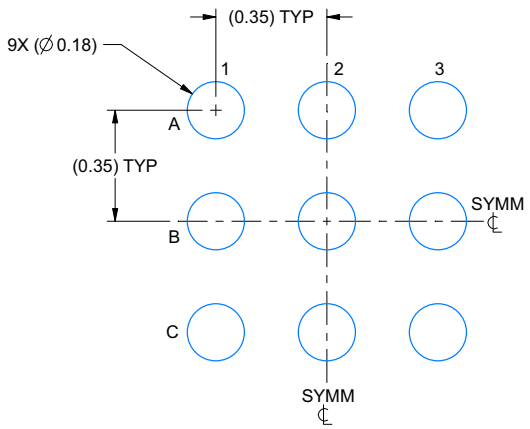

LAND PATTERN EXAMPLE
EXPOSED METAL SHOWN
SCALE: 50X

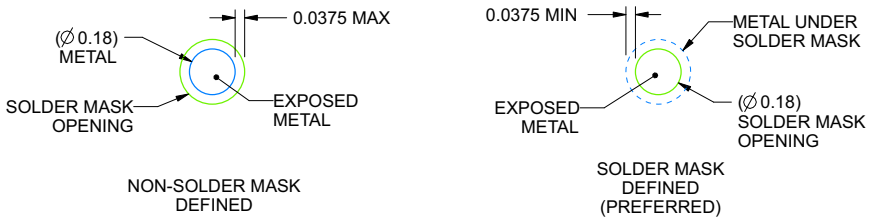

SOLDER MASK DETAILS
NOT TO SCALE

4226891/A 06/2021

NOTES: (continued)

3. Final dimensions may vary due to manufacturing tolerance considerations and also routing constraints.
   See Texas Instruments Literature No. SNVA009 (www.ti.com/lit/snva009).

Copyright © 2024 Texas Instruments Incorporated

EXAMPLE STENCIL DESIGN

YCK0009-C01

DSBGA - 0.33 mm max height

DIE SIZE BALL GRID ARRAY

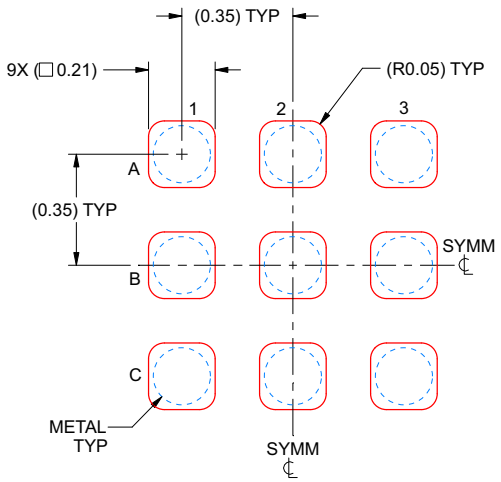

SOLDER PASTE EXAMPLE
BASED ON 0.075 mm THICK STENCIL
SCALE: 50X

4226891/A 06/2021

NOTES: (continued)

4. Laser cutting apertures with trapezoidal walls and rounded corners may offer better paste release.

Copyright © 2024 Texas Instruments Incorporated

PACKAGING INFORMATION

Orderable Device	Status (1)	Package Type	Package Drawing	Pins	Package Qty	Eco Plan (2)	Lead finish/ Ball material (6)	MSL Peak Temp (3)	Op Temp (°C)	Device Marking (4/5)	Samples
TLV9001IDBVR	ACTIVE	SOT-23	DBV	5	3000	RoHS & Green	NIPDAU | SN	Level-1-260C-UNLIM	-40 to 125	1OGF	Samples
TLV9001IDCKR	ACTIVE	SC70	DCK	5	3000	RoHS & Green	SN	Level-2-260C-1 YEAR	-40 to 125	1BZ	Samples
TLV9001IDPWR	ACTIVE	X2SON	DPW	5	3000	RoHS & Green	NIPDAUAG	Level-2-260C-1 YEAR	-40 to 125	DF	Samples
TLV9001SIDBVR	ACTIVE	SOT-23	DBV	6	3000	RoHS & Green	NIPDAU | SN	Level-1-260C-UNLIM	-40 to 125	1OJF	Samples
TLV9001SIDCKR	ACTIVE	SC70	DCK	6	3000	RoHS & Green	SN	Level-2-260C-1 YEAR	-40 to 125	1F8	Samples
TLV9001TIDCKR	ACTIVE	SC70	DCK	5	3000	RoHS & Green	SN	Level-2-260C-1 YEAR	-40 to 125	1D6	Samples
TLV9001UIDBVR	ACTIVE	SOT-23	DBV	5	3000	RoHS & Green	NIPDAU | SN	Level-1-260C-UNLIM	-40 to 125	1ODF	Samples
TLV9001ZIDPWR	ACTIVE	X2SON	DPW	5	3000	RoHS & Green	NIPDAU | NIPDAUAG	Level-1-260C-UNLIM	-40 to 125	(D, DF)	Samples
TLV9002IDDFR	ACTIVE	SOT-23-THIN	DDF	8	3000	RoHS & Green	NIPDAU	Level-1-260C-UNLIM	-40 to 125	T902	Samples
TLV9002IDGKR	ACTIVE	VSSOP	DGK	8	2500	RoHS & Green	NIPDAU | SN | NIPDAUAG	Level-2-260C-1 YEAR	-40 to 125	(1GNX, OBBI)	Samples
TLV9002IDGKT	ACTIVE	VSSOP	DGK	8	250	RoHS & Green	NIPDAU | SN | NIPDAUAG	Level-2-260C-1 YEAR	-40 to 125	(1GNX, OBBI)	Samples
TLV9002IDR	ACTIVE	SOIC	D	8	2500	RoHS & Green	NIPDAU	Level-1-260C-UNLIM	-40 to 125	TL9002	Samples
TLV9002IDSGR	ACTIVE	WSON	DSG	8	3000	RoHS & Green	NIPDAU	Level-1-260C-UNLIM	-40 to 125	1GMH	Samples
TLV9002IDSGT	ACTIVE	WSON	DSG	8	250	RoHS & Green	NIPDAU	Level-1-260C-UNLIM	-40 to 125	1GMH	Samples
TLV9002IPWR	ACTIVE	TSSOP	PW	8	2000	RoHS & Green	NIPDAU | SN	Level-2-260C-1 YEAR	-40 to 125	9002	Samples
TLV9002SIDGSR	ACTIVE	VSSOP	DGS	10	2500	RoHS & Green	NIPDAUAG	Level-2-260C-1 YEAR	-40 to 125	1GDX	Samples
TLV9002SIRUGR	ACTIVE	X2QFN	RUG	10	3000	RoHS & Green	NIPDAUAG	Level-2-260C-1 YEAR	-40 to 125	ENF	Samples
TLV9002SIYCKR	ACTIVE	DSBGA	YCK	9	3000	RoHS & Green	SNAGCU	Level-1-260C-UNLIM	-40 to 125	JK	Samples
TLV9004IDR	ACTIVE	SOIC	D	14	2500	RoHS & Green	NIPDAU	Level-2-260C-1 YEAR	-40 to 125	TLV9004	Samples

Orderable Device	Status (1)	Package Type	Package Drawing	Pins	Package Qty	Eco Plan (2)	Lead finish/ Ball material (6)	MSL Peak Temp (3)	Op Temp (°C)	Device Marking (4/5)	Samples
TLV9004IDYYR	ACTIVE	SOT-23-THIN	DYY	14	3000	RoHS & Green	NIPDAU	Level-1-260C-UNLIM	-40 to 125	TLV9004I	Samples
TLV9004IPWR	ACTIVE	TSSOP	PW	14	2000	RoHS & Green	NIPDAU | SN	Level-2-260C-1 YEAR	-40 to 125	TLV9004	Samples
TLV9004IRTER	ACTIVE	WQFN	RTE	16	3000	RoHS & Green	NIPDAU	Level-1-260C-UNLIM	-40 to 125	T9004	Samples
TLV9004IRUCR	ACTIVE	QFN	RUC	14	3000	RoHS & Green	NIPDAU	Level-2-260C-1 YEAR	-40 to 125	1DC	Samples
TLV9004SIRTER	ACTIVE	WQFN	RTE	16	3000	RoHS & Green	NIPDAU	Level-1-260C-UNLIM	-40 to 125	T9004S	Samples

(1) The marketing status values are defined as follows:
ACTIVE: Product device recommended for new designs.
LIFEBUY: TI has announced that the device will be discontinued, and a lifetime-buy period is in effect.
NRND: Not recommended for new designs. Device is in production to support existing customers, but TI does not recommend using this part in a new design.
PREVIEW: Device has been announced but is not in production. Samples may or may not be available.
OBSOLETE: TI has discontinued the production of the device.

(2) **RoHS:** TI defines "RoHS" to mean semiconductor products that are compliant with the current EU RoHS requirements for all 10 RoHS substances, including the requirement that RoHS substance do not exceed 0.1% by weight in homogeneous materials. Where designed to be soldered at high temperatures, "RoHS" products are suitable for use in specified lead-free processes. TI may reference these types of products as "Pb-Free".
RoHS Exempt: TI defines "RoHS Exempt" to mean products that contain lead but are compliant with EU RoHS pursuant to a specific EU RoHS exemption.
Green: TI defines "Green" to mean the content of Chlorine (Cl) and Bromine (Br) based flame retardants meet JS709B low halogen requirements of <=1000ppm threshold. Antimony trioxide based flame retardants must also meet the <=1000ppm threshold requirement.

(3) MSL, Peak Temp. - The Moisture Sensitivity Level rating according to the JEDEC industry standard classifications, and peak solder temperature.

(4) There may be additional marking, which relates to the logo, the lot trace code information, or the environmental category on the device.

(5) Multiple Device Markings will be inside parentheses. Only one Device Marking contained in parentheses and separated by a "~" will appear on a device. If a line is indented then it is a continuation of the previous line and the two combined represent the entire Device Marking for that device.

(6) Lead finish/Ball material - Orderable Devices may have multiple material finish options. Finish options are separated by a vertical ruled line. Lead finish/Ball material values may wrap to two lines if the finish value exceeds the maximum column width.

Important Information and Disclaimer: The information provided on this page represents TI's knowledge and belief as of the date that it is provided. TI bases its knowledge and belief on information provided by third parties, and makes no representation or warranty as to the accuracy of such information. Efforts are underway to better integrate information from third parties. TI has taken and

continues to take reasonable steps to provide representative and accurate information but may not have conducted destructive testing or chemical analysis on incoming materials and chemicals.
TI and TI suppliers consider certain information to be proprietary, and thus CAS numbers and other limited information may not be available for release.

In no event shall TI's liability arising out of such information exceed the total purchase price of the TI part(s) at issue in this document sold by TI to Customer on an annual basis.

OTHER QUALIFIED VERSIONS OF TLV9001, TLV9002, TLV9004 :

- Automotive : TLV9001-Q1, TLV9002-Q1, TLV9004-Q1

NOTE: Qualified Version Definitions:

- Automotive - Q100 devices qualified for high-reliability automotive applications targeting zero defects

TAPE AND REEL INFORMATION

REEL DIMENSIONS

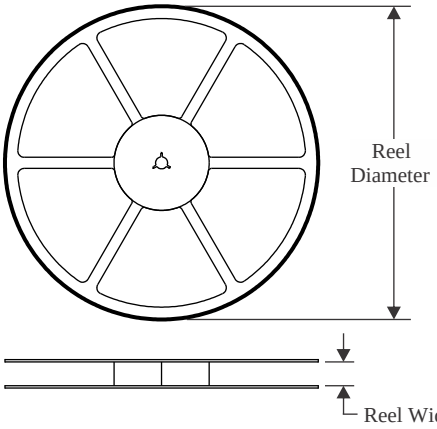

TAPE DIMENSIONS

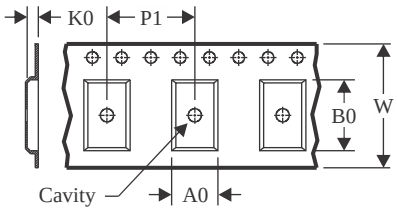

A0	Dimension designed to accommodate the component width
B0	Dimension designed to accommodate the component length
K0	Dimension designed to accommodate the component thickness
W	Overall width of the carrier tape
P1	Pitch between successive cavity centers

QUADRANT ASSIGNMENTS FOR PIN 1 ORIENTATION IN TAPE

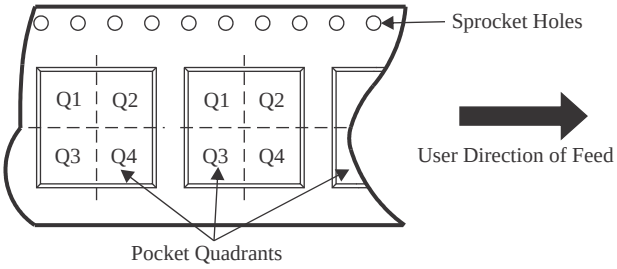

*All dimensions are nominal

Device	Package Type	Package Drawing	Pins	SPQ	Reel Diameter (mm)	Reel Width W1 (mm)	A0 (mm)	B0 (mm)	K0 (mm)	P1 (mm)	W (mm)	Pin1 Quadrant
TLV9001IDBVR	SOT-23	DBV	5	3000	180.0	8.4	3.2	3.2	1.4	4.0	8.0	Q3
TLV9001IDCKR	SC70	DCK	5	3000	180.0	8.4	2.3	2.5	1.2	4.0	8.0	Q3
TLV9001IDPWR	X2SON	DPW	5	3000	178.0	8.4	0.91	0.91	0.5	2.0	8.0	Q2
TLV9001SIDBVR	SOT-23	DBV	6	3000	180.0	8.4	3.2	3.2	1.4	4.0	8.0	Q3
TLV9001SIDCKR	SC70	DCK	6	3000	180.0	8.4	2.3	2.5	1.2	4.0	8.0	Q3
TLV9001TIDCKR	SC70	DCK	5	3000	180.0	8.4	2.3	2.5	1.2	4.0	8.0	Q3
TLV9001UIDBVR	SOT-23	DBV	5	3000	180.0	8.4	3.2	3.2	1.4	4.0	8.0	Q3
TLV9001ZIDPWR	X2SON	DPW	5	3000	178.0	8.4	0.91	0.91	0.5	2.0	8.0	Q2
TLV9002IDDFR	SOT-23-THIN	DDF	8	3000	180.0	8.4	3.2	3.2	1.4	4.0	8.0	Q3
TLV9002IDGKR	VSSOP	DGK	8	2500	330.0	12.4	5.3	3.4	1.4	8.0	12.0	Q1
TLV9002IDGKT	VSSOP	DGK	8	250	330.0	12.4	5.3	3.4	1.4	8.0	12.0	Q1
TLV9002IDR	SOIC	D	8	2500	330.0	12.4	6.4	5.2	2.1	8.0	12.0	Q1
TLV9002IDSGR	WSON	DSG	8	3000	180.0	8.4	2.3	2.3	1.15	4.0	8.0	Q2
TLV9002IDSGT	WSON	DSG	8	250	180.0	8.4	2.3	2.3	1.15	4.0	8.0	Q2
TLV9002IPWR	TSSOP	PW	8	2000	330.0	12.4	7.0	3.6	1.6	8.0	12.0	Q1

Device	Package Type	Package Drawing	Pins	SPQ	Reel Diameter (mm)	Reel Width W1 (mm)	A0 (mm)	B0 (mm)	K0 (mm)	P1 (mm)	W (mm)	Pin1 Quadrant
TLV9002SIDGSR	VSSOP	DGS	10	2500	330.0	12.4	5.3	3.4	1.4	8.0	12.0	Q1
TLV9002SIRUGR	X2QFN	RUG	10	3000	178.0	8.4	1.75	2.25	0.56	4.0	8.0	Q1
TLV9002SIYCKR	DSBGA	YCK	9	3000	180.0	8.4	1.1	1.1	0.4	2.0	8.0	Q1
TLV9004IDR	SOIC	D	14	2500	330.0	16.4	6.5	9.0	2.1	8.0	16.0	Q1
TLV9004IDYYR	SOT-23-THIN	DYY	14	3000	330.0	12.4	4.8	3.6	1.6	8.0	12.0	Q3
TLV9004IPWR	TSSOP	PW	14	2000	330.0	12.4	6.9	5.6	1.6	8.0	12.0	Q1
TLV9004IRTER	WQFN	RTE	16	3000	330.0	12.4	3.3	3.3	1.1	8.0	12.0	Q2
TLV9004IRUCR	QFN	RUC	14	3000	180.0	9.5	2.16	2.16	0.5	4.0	8.0	Q2
TLV9004SIRTER	WQFN	RTE	16	3000	330.0	12.4	3.3	3.3	1.1	8.0	12.0	Q2

TAPE AND REEL BOX DIMENSIONS

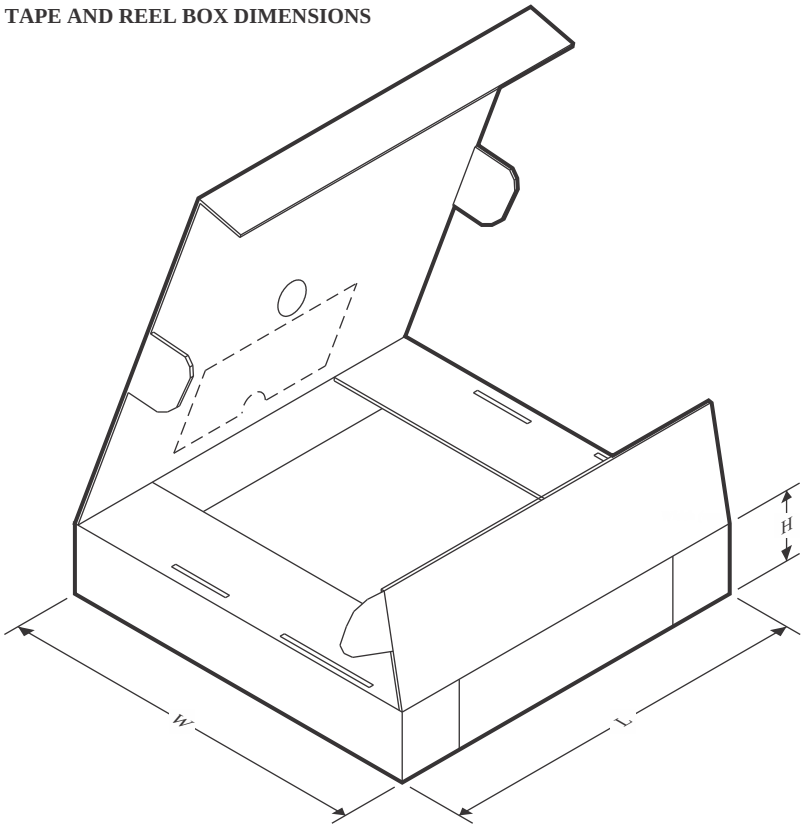

*All dimensions are nominal

Device	Package Type	Package Drawing	Pins	SPQ	Length (mm)	Width (mm)	Height (mm)
TLV9001IDBVR	SOT-23	DBV	5	3000	210.0	185.0	35.0
TLV9001IDCKR	SC70	DCK	5	3000	210.0	185.0	35.0
TLV9001IDPWR	X2SON	DPW	5	3000	205.0	200.0	33.0
TLV9001SIDBVR	SOT-23	DBV	6	3000	210.0	185.0	35.0
TLV9001SIDCKR	SC70	DCK	6	3000	210.0	185.0	35.0
TLV9001TIDCKR	SC70	DCK	5	3000	210.0	185.0	35.0
TLV9001UIDBVR	SOT-23	DBV	5	3000	210.0	185.0	35.0
TLV9001ZIDPWR	X2SON	DPW	5	3000	205.0	200.0	33.0
TLV9002IDDFR	SOT-23-THIN	DDF	8	3000	210.0	185.0	35.0
TLV9002IDGKR	VSSOP	DGK	8	2500	356.0	356.0	35.0
TLV9002IDGKT	VSSOP	DGK	8	250	356.0	356.0	35.0
TLV9002IDR	SOIC	D	8	2500	356.0	356.0	35.0
TLV9002IDSGR	WSON	DSG	8	3000	210.0	185.0	35.0
TLV9002IDSGT	WSON	DSG	8	250	210.0	185.0	35.0
TLV9002IPWR	TSSOP	PW	8	2000	356.0	356.0	35.0
TLV9002SIDGSR	VSSOP	DGS	10	2500	366.0	364.0	50.0
TLV9002SIRUGR	X2QFN	RUG	10	3000	205.0	200.0	33.0
TLV9002SIYCKR	DSBGA	YCK	9	3000	182.0	182.0	20.0

Device	Package Type	Package Drawing	Pins	SPQ	Length (mm)	Width (mm)	Height (mm)
TLV9004IDR	SOIC	D	14	2500	356.0	356.0	35.0
TLV9004IDYYR	SOT-23-THIN	DYY	14	3000	336.6	336.6	31.8
TLV9004IPWR	TSSOP	PW	14	2000	356.0	356.0	35.0
TLV9004IRTER	WQFN	RTE	16	3000	367.0	367.0	35.0
TLV9004IRUCR	QFN	RUC	14	3000	205.0	200.0	30.0
TLV9004SIRTER	WQFN	RTE	16	3000	367.0	367.0	35.0

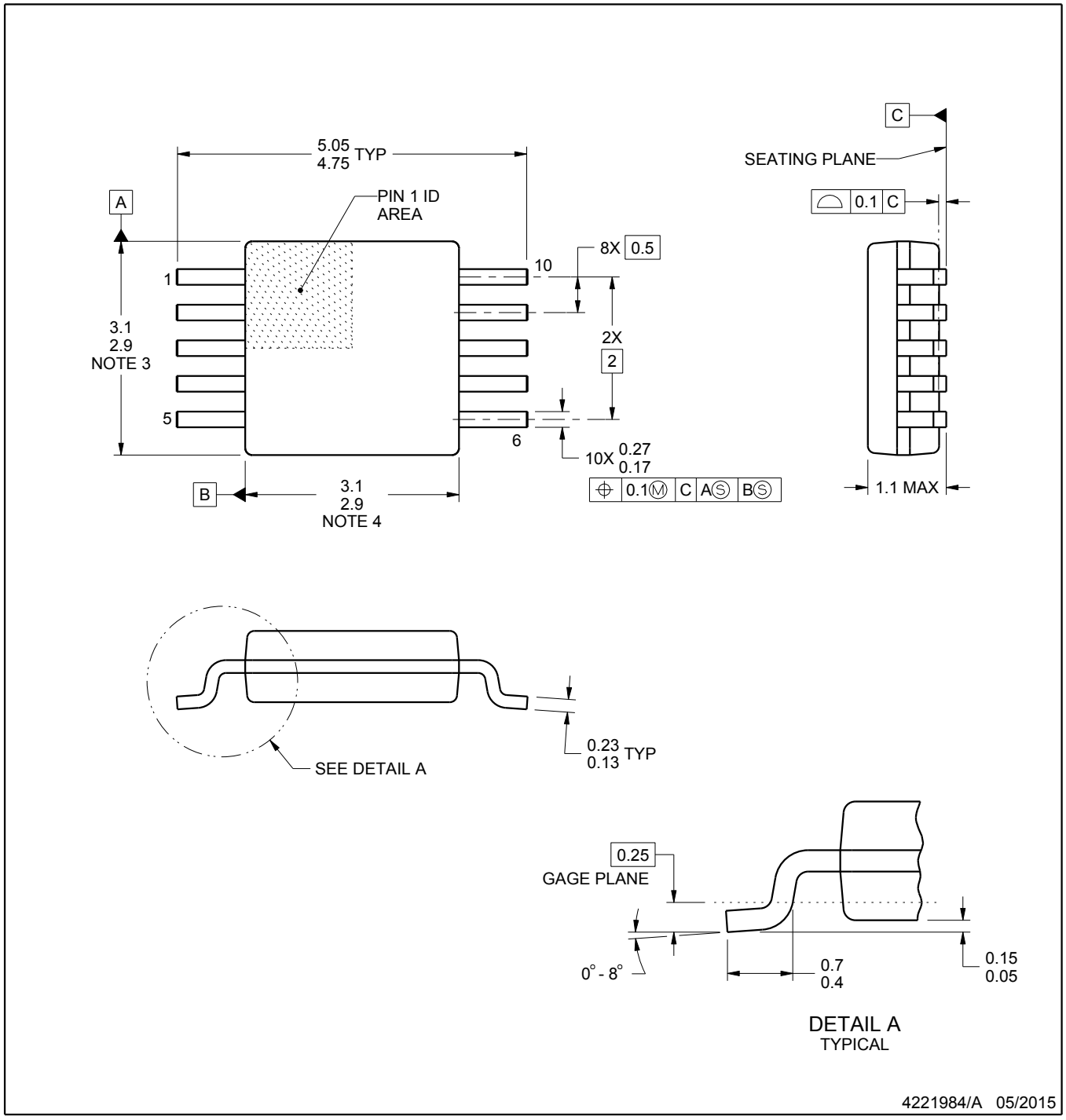

NOTES:

1. All linear dimensions are in millimeters. Any dimensions in parenthesis are for reference only. Dimensioning and tolerancing per ASME Y14.5M.
2. This drawing is subject to change without notice.
3. This dimension does not include mold flash, protrusions, or gate burrs. Mold flash, protrusions, or gate burrs shall not exceed 0.15 mm per side.
4. This dimension does not include interlead flash. Interlead flash shall not exceed 0.25 mm per side.
5. Reference JEDEC registration MO-187, variation BA.

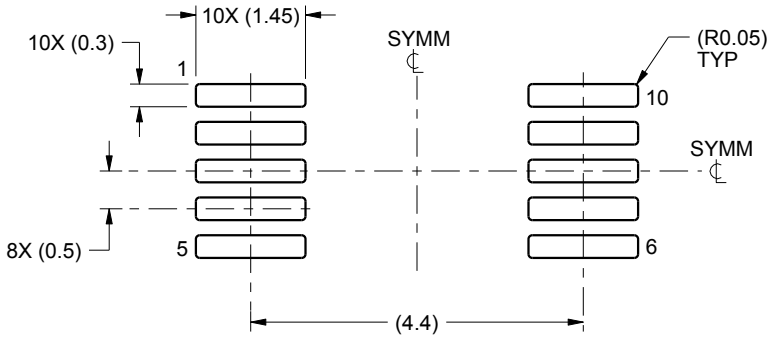

LAND PATTERN EXAMPLE
SCALE:10X

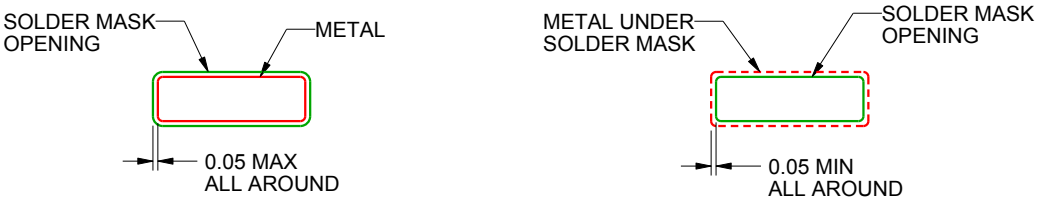

NON SOLDER MASK
DEFINED

SOLDER MASK
DEFINED

SOLDER MASK DETAILS
NOT TO SCALE

4221984/A 05/2015

NOTES: (continued)

6. Publication IPC-7351 may have alternate designs.
7. Solder mask tolerances between and around signal pads can vary based on board fabrication site.

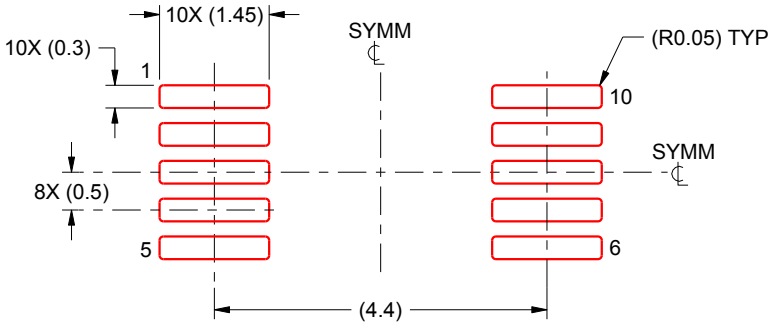

SOLDER PASTE EXAMPLE
BASED ON 0.125 mm THICK STENCIL
SCALE:10X

4221984/A 05/2015

NOTES: (continued)

8. Laser cutting apertures with trapezoidal walls and rounded corners may offer better paste release. IPC-7525 may have alternate design recommendations.
9. Board assembly site may have different recommendations for stencil design.

DPW 5 X2SON - 0.4 mm max height

PLASTIC SMALL OUTLINE - NO LEAD

Images above are just a representation of the package family, actual package may vary.
Refer to the product data sheet for package details.

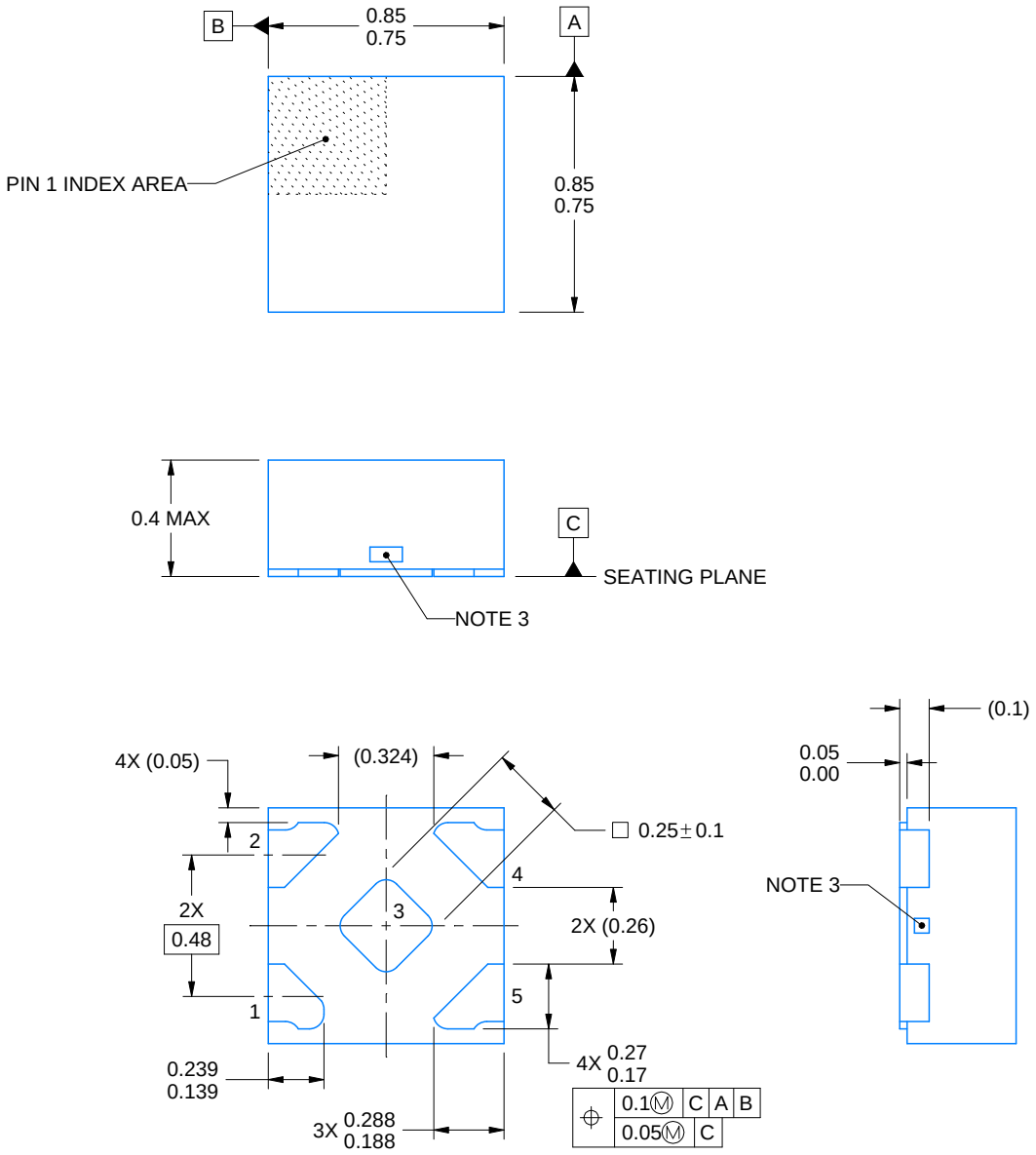

4223102/D 03/2022

NOTES:

1. All linear dimensions are in millimeters. Any dimensions in parenthesis are for reference only. Dimensioning and tolerancing per ASME Y14.5M.
2. This drawing is subject to change without notice.
3. The size and shape of this feature may vary.

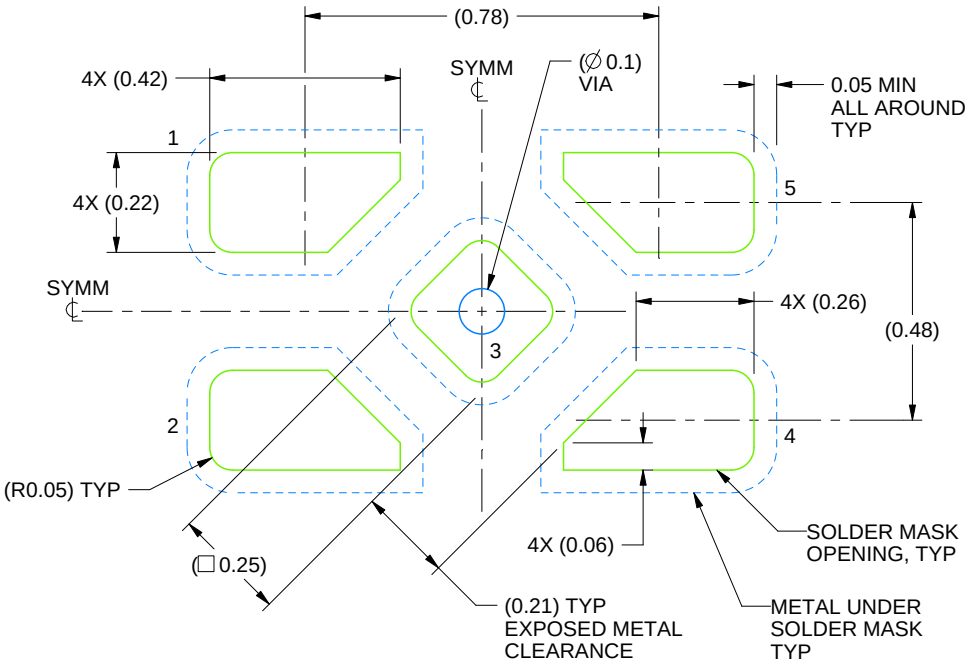

LAND PATTERN EXAMPLE
SOLDER MASK DEFINED
SCALE:60X

4223102/D 03/2022

NOTES: (continued)

4. This package is designed to be soldered to a thermal pad on the board. For more information, refer to QFN/SON PCB application note in literature No. SLUA271 (www.ti.com/lit/slua271).

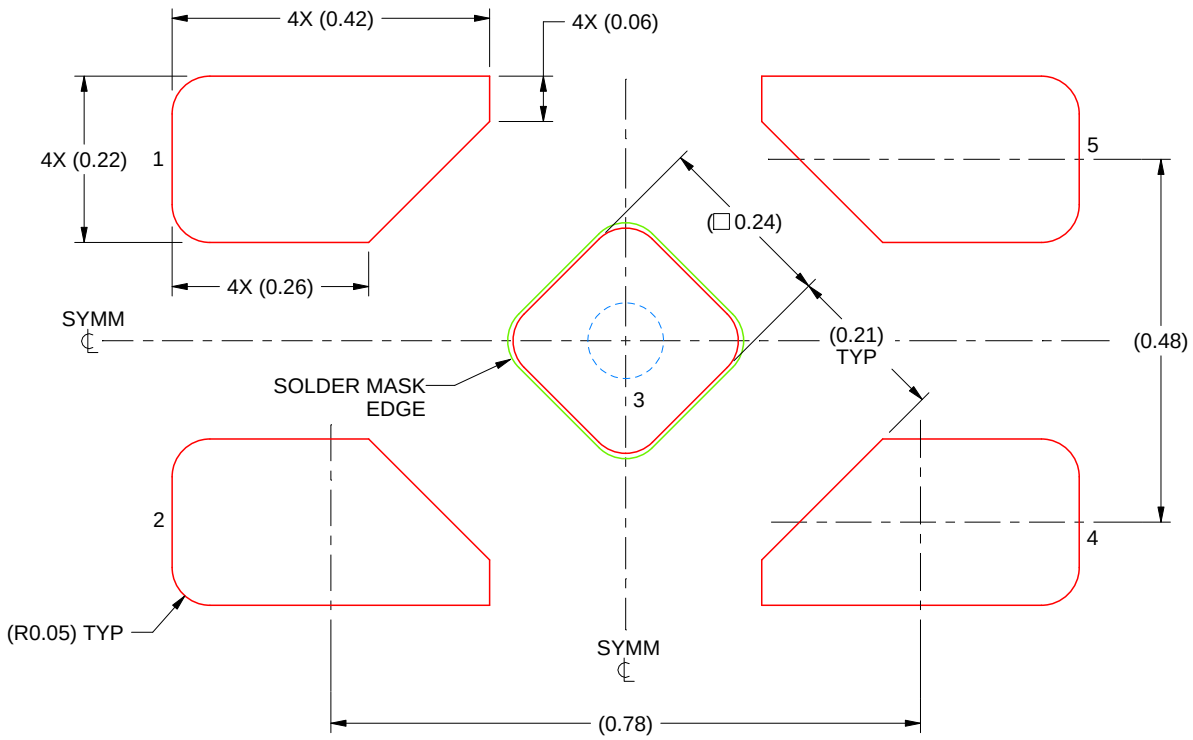

SOLDER PASTE EXAMPLE
BASED ON 0.1 mm THICK STENCIL

EXPOSED PAD 3
92% PRINTED SOLDER COVERAGE BY AREA UNDER PACKAGE
SCALE:100X

4223102/D 03/2022

NOTES: (continued)

5. Laser cutting apertures with trapezoidal walls and rounded corners may offer better paste release. IPC-7525 may have alternate design recommendations.

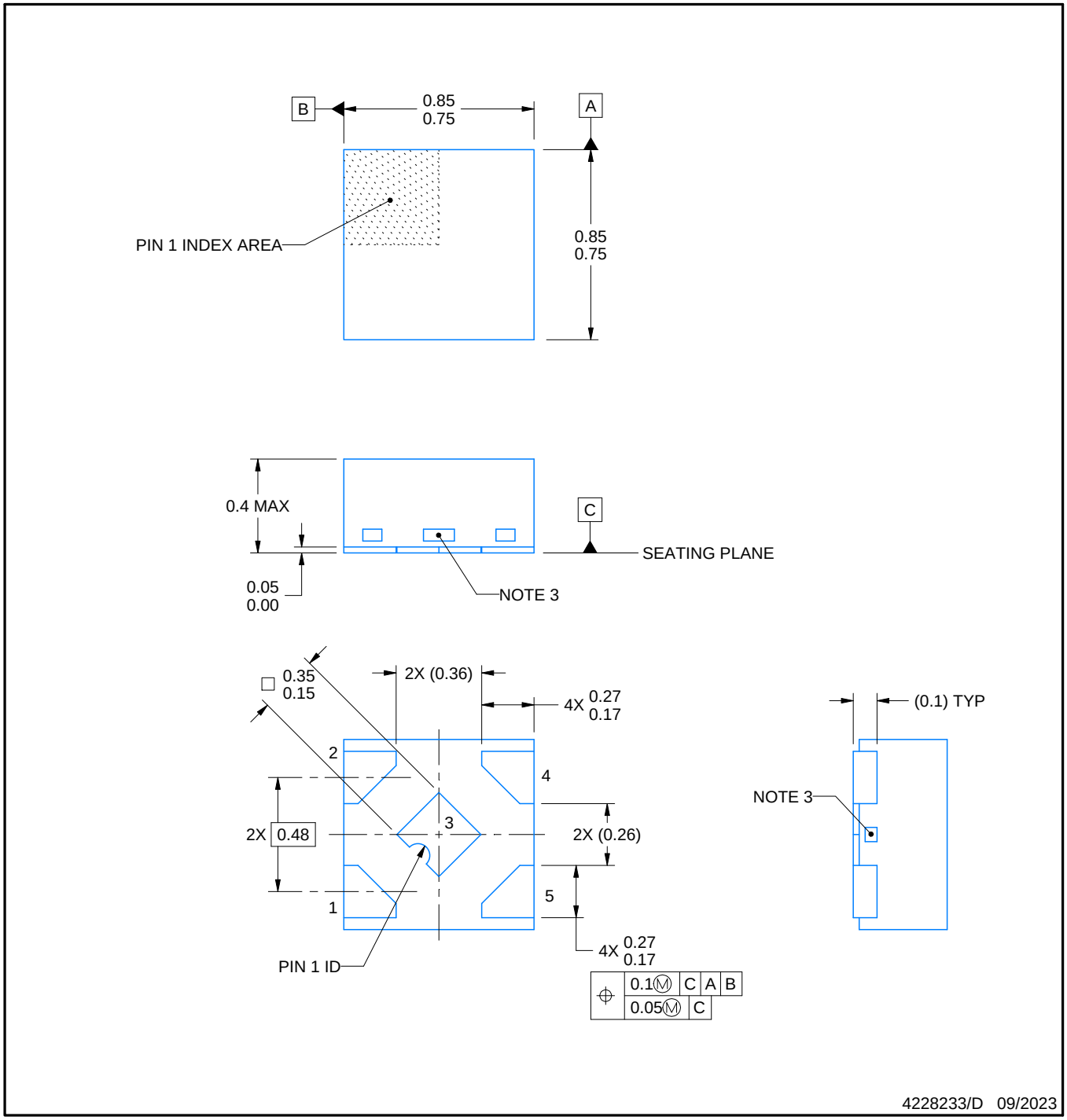

NOTES:

1. All linear dimensions are in millimeters. Any dimensions in parenthesis are for reference only. Dimensioning and tolerancing per ASME Y14.5M.
2. This drawing is subject to change without notice.
3. The size and shape of this feature may vary.

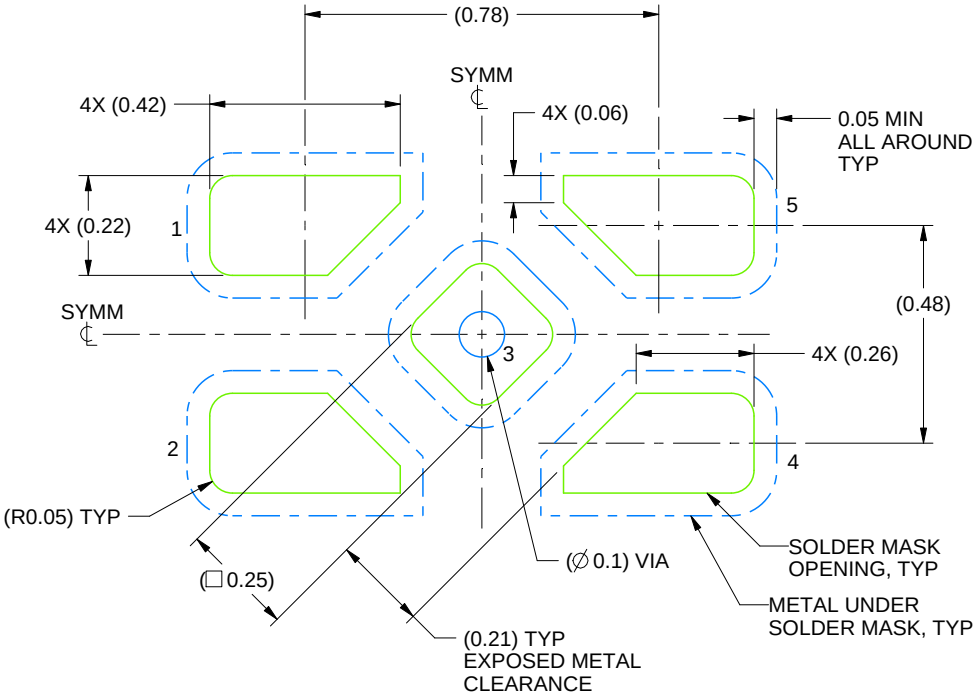

LAND PATTERN EXAMPLE
SOLDER MASK DEFINED
SCALE:60X

4228233/D 09/2023

NOTES: (continued)

4. This package is designed to be soldered to a thermal pad on the board. For more information, refer to QFN/SON PCB application note in literature No. SLUA271 (www.ti.com/lit/slua271).

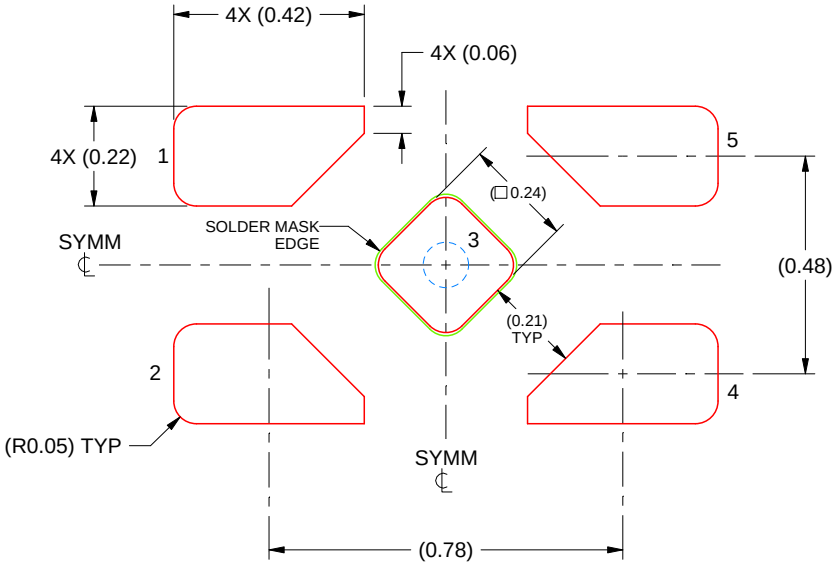

SOLDER PASTE EXAMPLE
BASED ON 0.1 mm THICK STENCIL

EXPOSED PAD 5
92% PRINTED SOLDER COVERAGE BY AREA UNDER PACKAGE
SCALE:60X

4228233/D 09/2023

NOTES: (continued)

5. Laser cutting apertures with trapezoidal walls and rounded corners may offer better paste release. IPC-7525 may have alternate design recommendations.

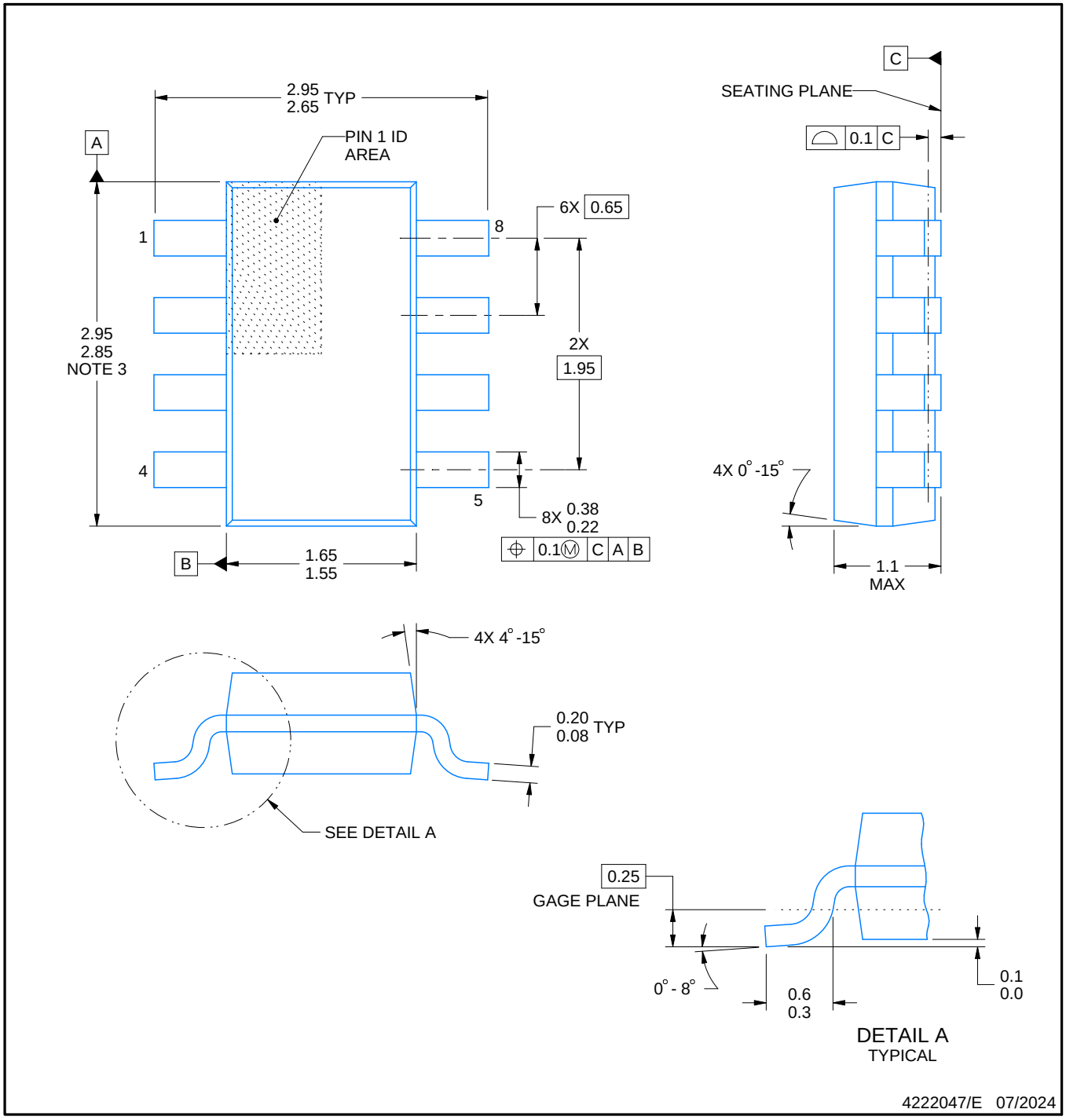

NOTES:

1. All linear dimensions are in millimeters. Any dimensions in parenthesis are for reference only. Dimensioning and tolerancing per ASME Y14.5M.
2. This drawing is subject to change without notice.
3. This dimension does not include mold flash, protrusions, or gate burrs. Mold flash, protrusions, or gate burrs shall not exceed 0.15 mm per side.

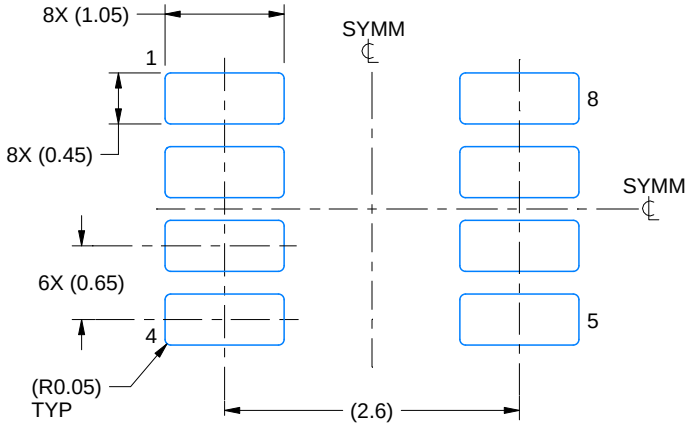

LAND PATTERN EXAMPLE
EXPOSED METAL SHOWN
SCALE:15X

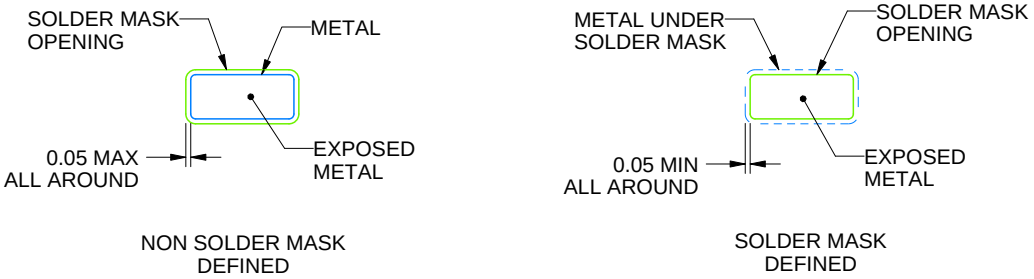

SOLDER MASK DETAILS

4222047/E 07/2024

NOTES: (continued)

4. Publication IPC-7351 may have alternate designs.
5. Solder mask tolerances between and around signal pads can vary based on board fabrication site.

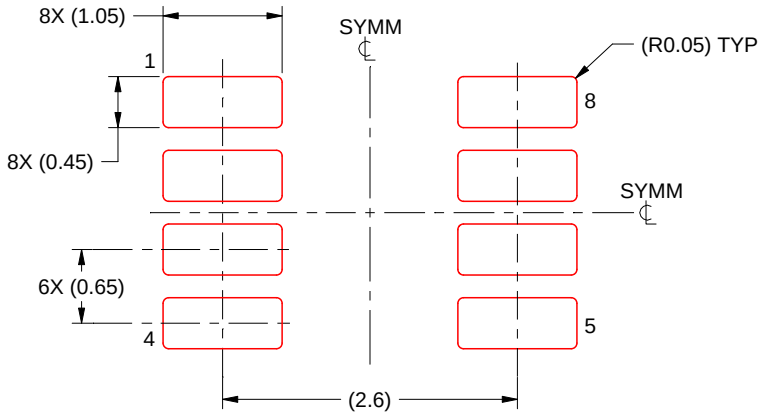

SOLDER PASTE EXAMPLE
BASED ON 0.125 mm THICK STENCIL
SCALE:15X

4222047/E 07/2024

NOTES: (continued)

6. Laser cutting apertures with trapezoidal walls and rounded corners may offer better paste release. IPC-7525 may have alternate design recommendations.
7. Board assembly site may have different recommendations for stencil design.

RUG (R–PQFP–N10) PLASTIC QUAD FLATPACK

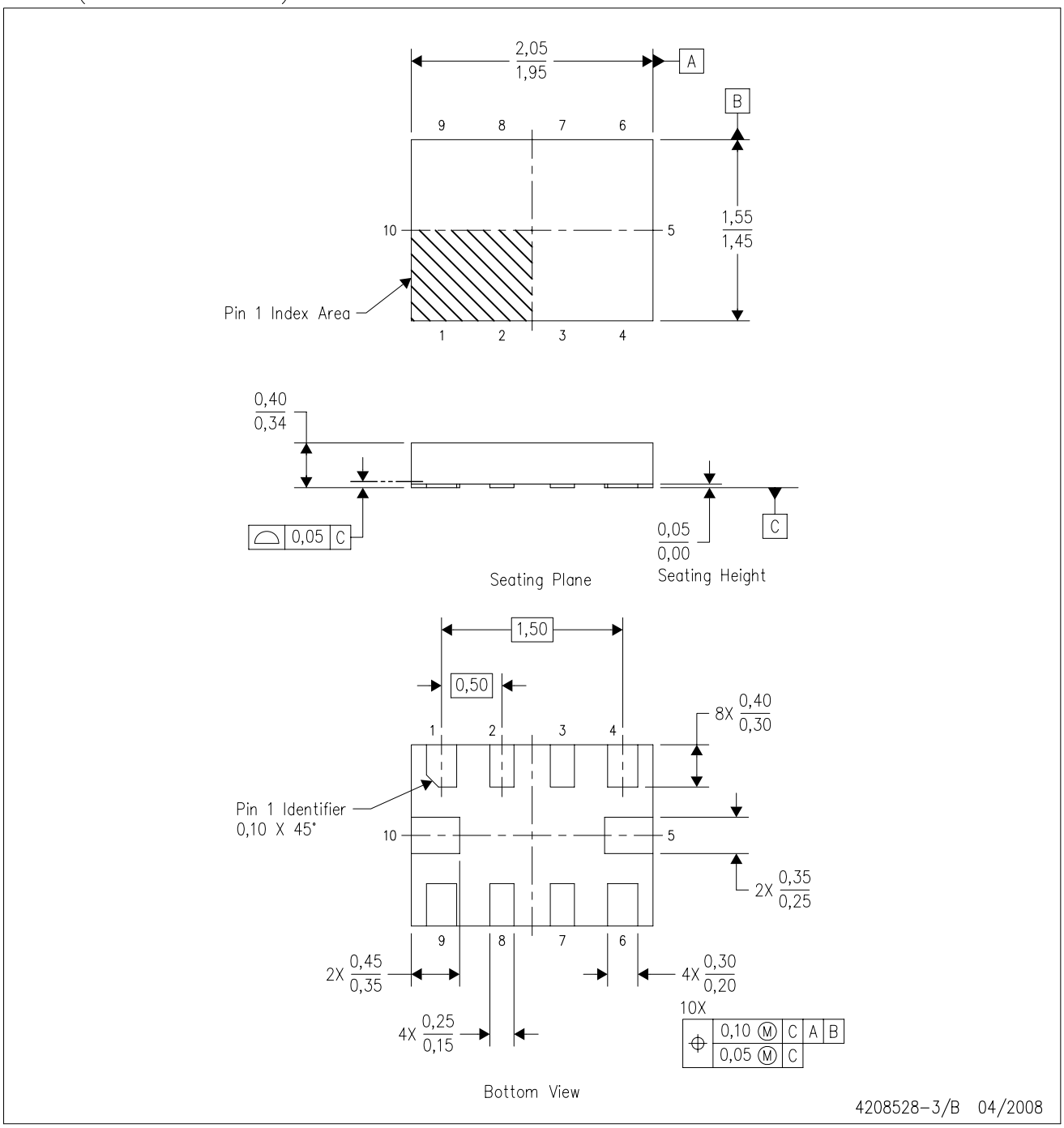

NOTES:
A. All linear dimensions are in millimeters. Dimensioning and tolerancing per ASME Y14.5M–1994.
B. This drawing is subject to change without notice.
C. QFN (Quad Flatpack No–Lead) package configuration.
D. This package complies to JEDEC MO–288 variation X2EFD.

RUG (R–PQFP–N10)

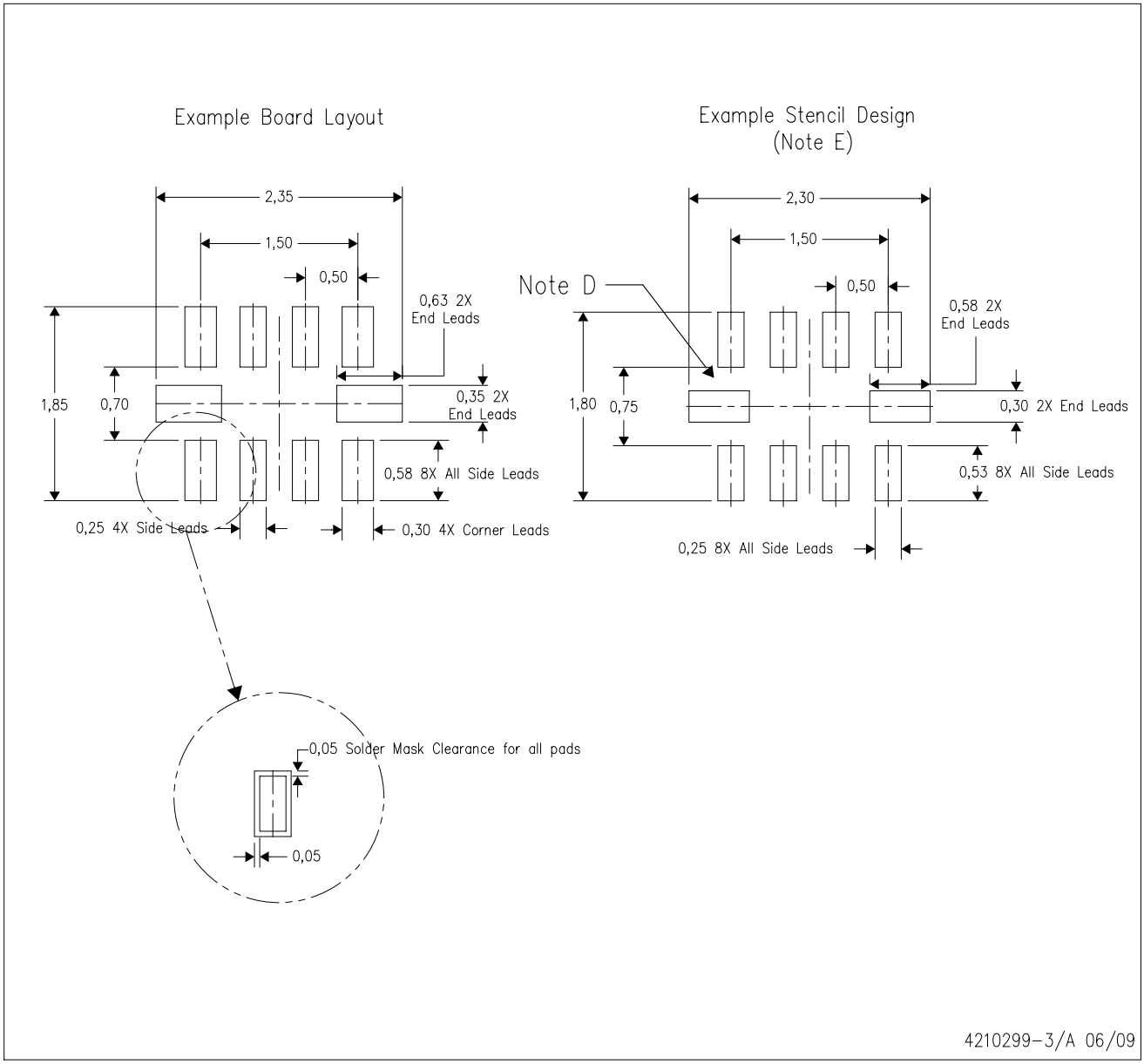

NOTES:
A. All linear dimensions are in millimeters.
B. This drawing is subject to change without notice.
C. Publication IPC–7351 is recommended for alternate designs.
D. Customers should contact their board fabrication site for minimum solder mask web tolerances between signal pads.
E. Maximum stencil thickness 0,127 mm (5 mils). All linear dimensions are in millimeters.
F. Laser cutting apertures with trapezoidal walls and also rounding corners will offer better paste release. Customers should contact their board assembly site for stencil design recommendations. Refer to IPC 7525 for stencil design considerations.
G. Side aperture dimensions over–print land for acceptable area ratio > 0.66. Customer may reduce side aperture dimensions if stencil manufacturing process allows for sufficient release at smaller opening.

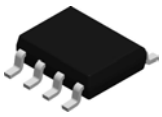

PACKAGE OUTLINE

D0008A

SOIC - 1.75 mm max height

SMALL OUTLINE INTEGRATED CIRCUIT

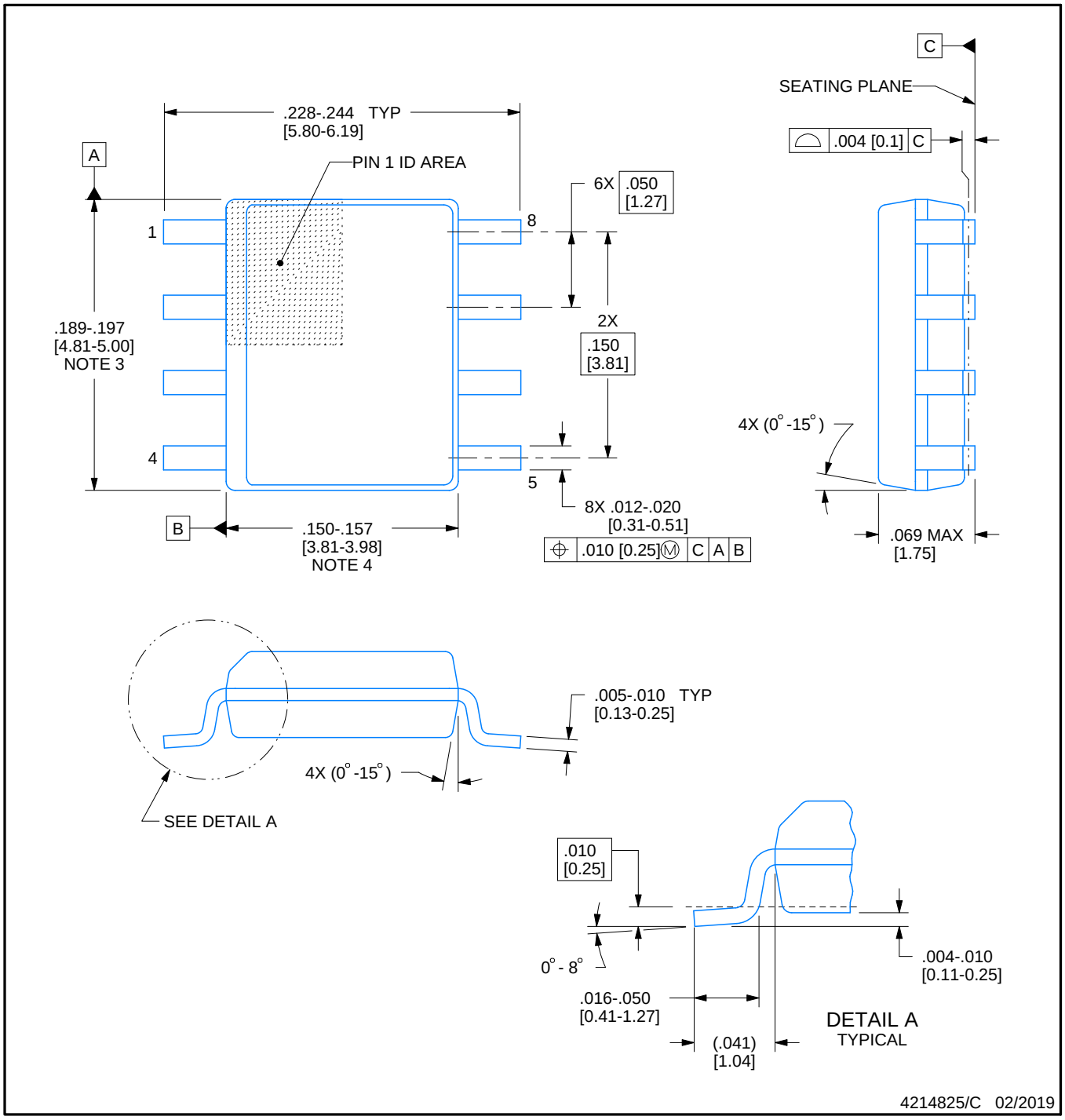

NOTES:

1. Linear dimensions are in inches [millimeters]. Dimensions in parenthesis are for reference only. Controlling dimensions are in inches. Dimensioning and tolerancing per ASME Y14.5M.
2. This drawing is subject to change without notice.
3. This dimension does not include mold flash, protrusions, or gate burrs. Mold flash, protrusions, or gate burrs shall not exceed .006 [0.15] per side.
4. This dimension does not include interlead flash.
5. Reference JEDEC registration MS-012, variation AA.

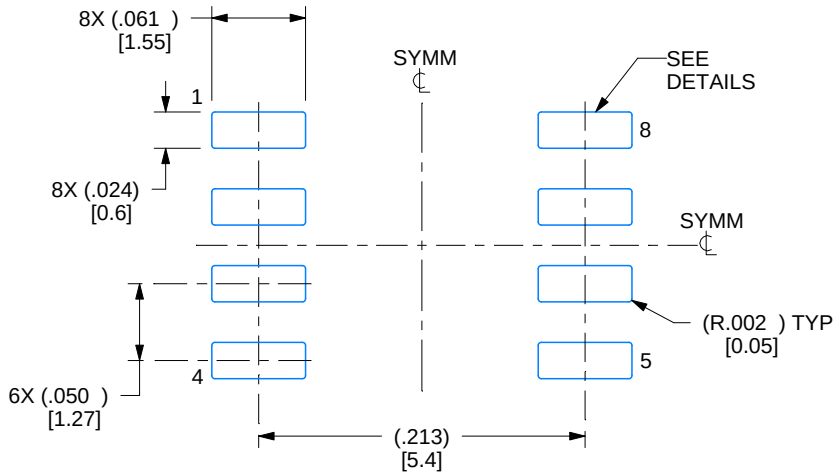

LAND PATTERN EXAMPLE
EXPOSED METAL SHOWN
SCALE:8X

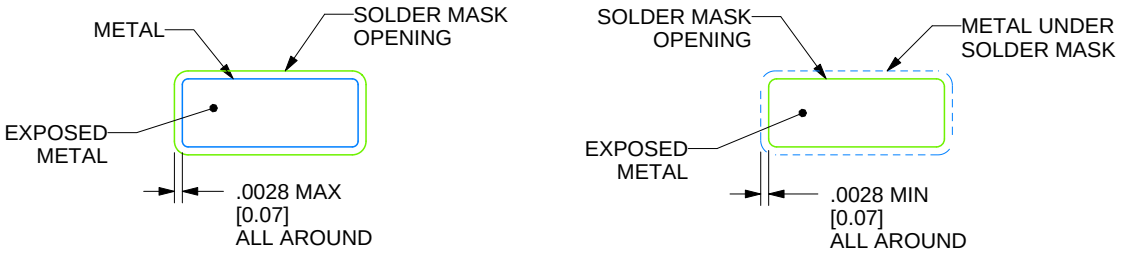

SOLDER MASK DETAILS

4214825/C 02/2019

NOTES: (continued)

6. Publication IPC-7351 may have alternate designs.
7. Solder mask tolerances between and around signal pads can vary based on board fabrication site.

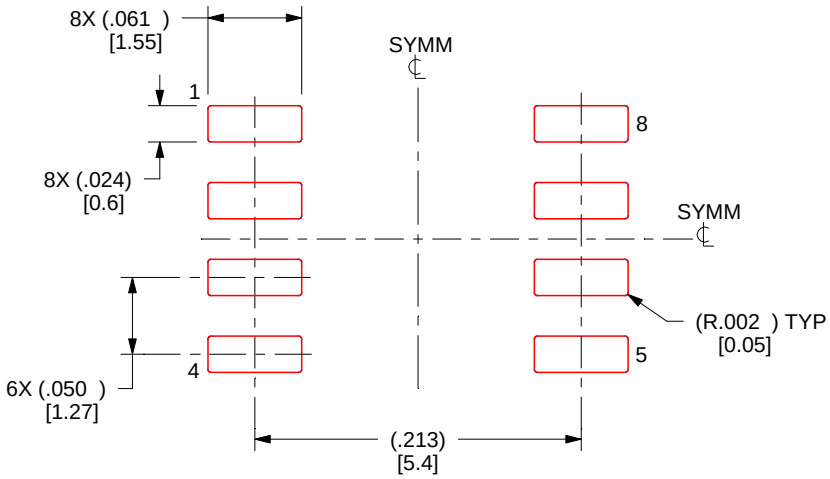

SOLDER PASTE EXAMPLE
BASED ON .005 INCH [0.125 MM] THICK STENCIL
SCALE:8X

4214825/C 02/2019

NOTES: (continued)

8. Laser cutting apertures with trapezoidal walls and rounded corners may offer better paste release. IPC-7525 may have alternate design recommendations.
9. Board assembly site may have different recommendations for stencil design.

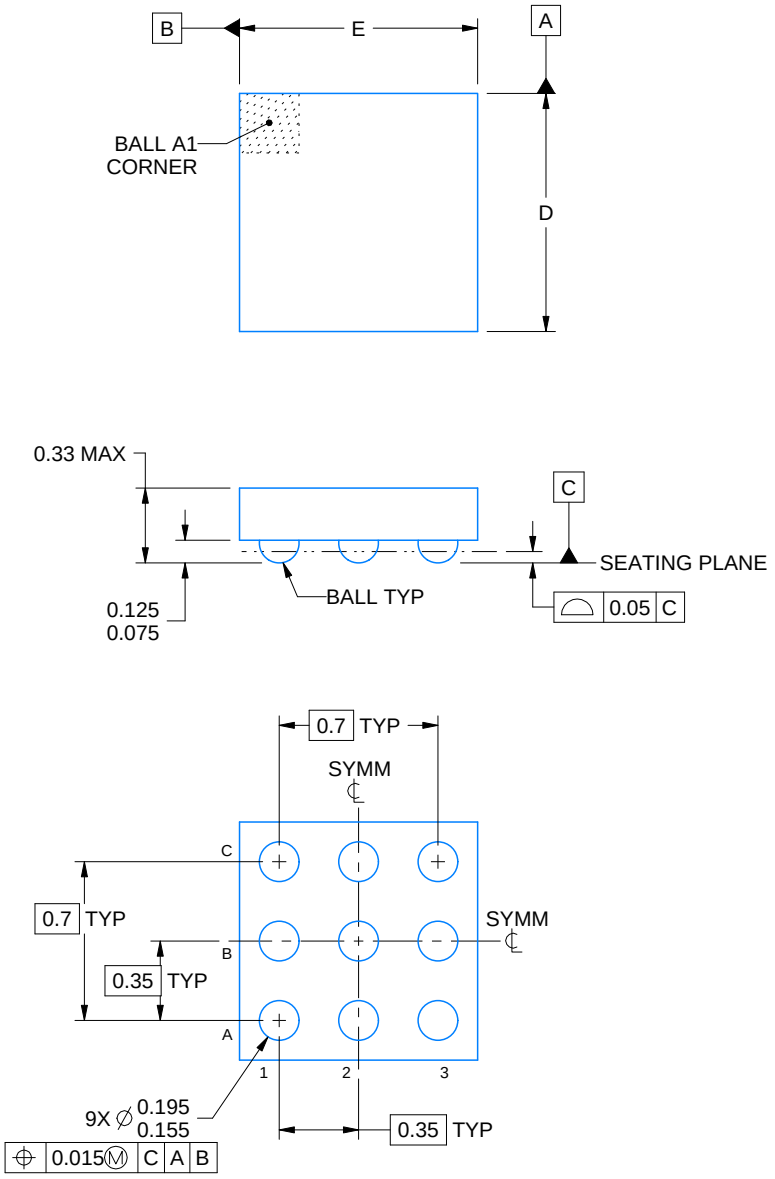

4225837/A 04/2020

NOTES:

1. All linear dimensions are in millimeters. Any dimensions in parenthesis are for reference only. Dimensioning and tolerancing per ASME Y14.5M.
2. This drawing is subject to change without notice.

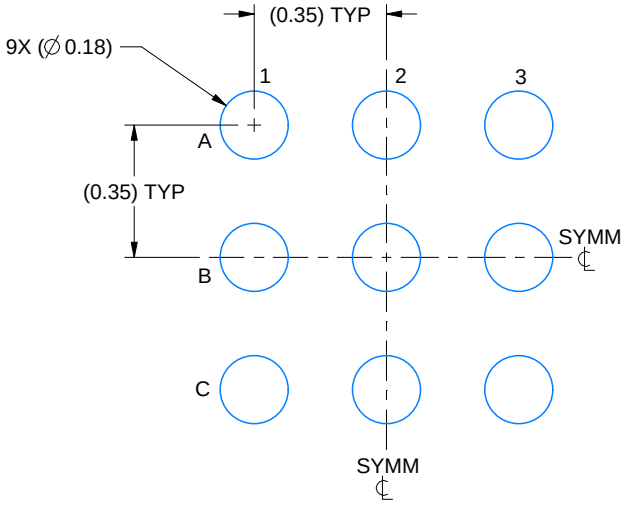

LAND PATTERN EXAMPLE
EXPOSED METAL SHOWN
SCALE: 50X

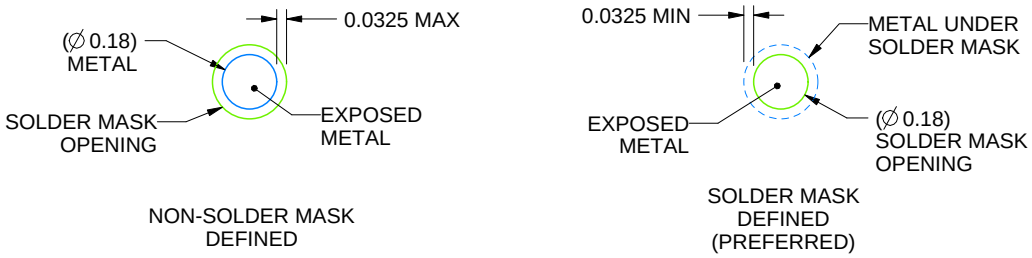

SOLDER MASK DETAILS
NOT TO SCALE

4225837/A 04/2020

NOTES: (continued)

3. Final dimensions may vary due to manufacturing tolerance considerations and also routing constraints.
   See Texas Instruments Literature No. SNVA009 (www.ti.com/lit/snva009).

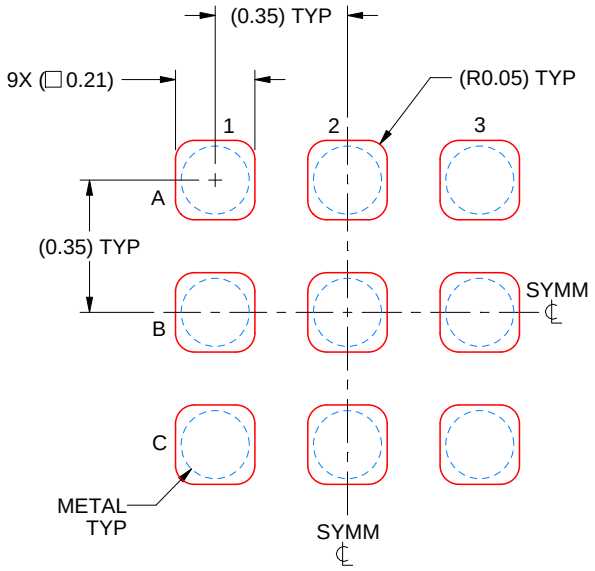

SOLDER PASTE EXAMPLE
BASED ON 0.075 mm THICK STENCIL
SCALE: 50X

4225837/A 04/2020

NOTES: (continued)

4. Laser cutting apertures with trapezoidal walls and rounded corners may offer better paste release.

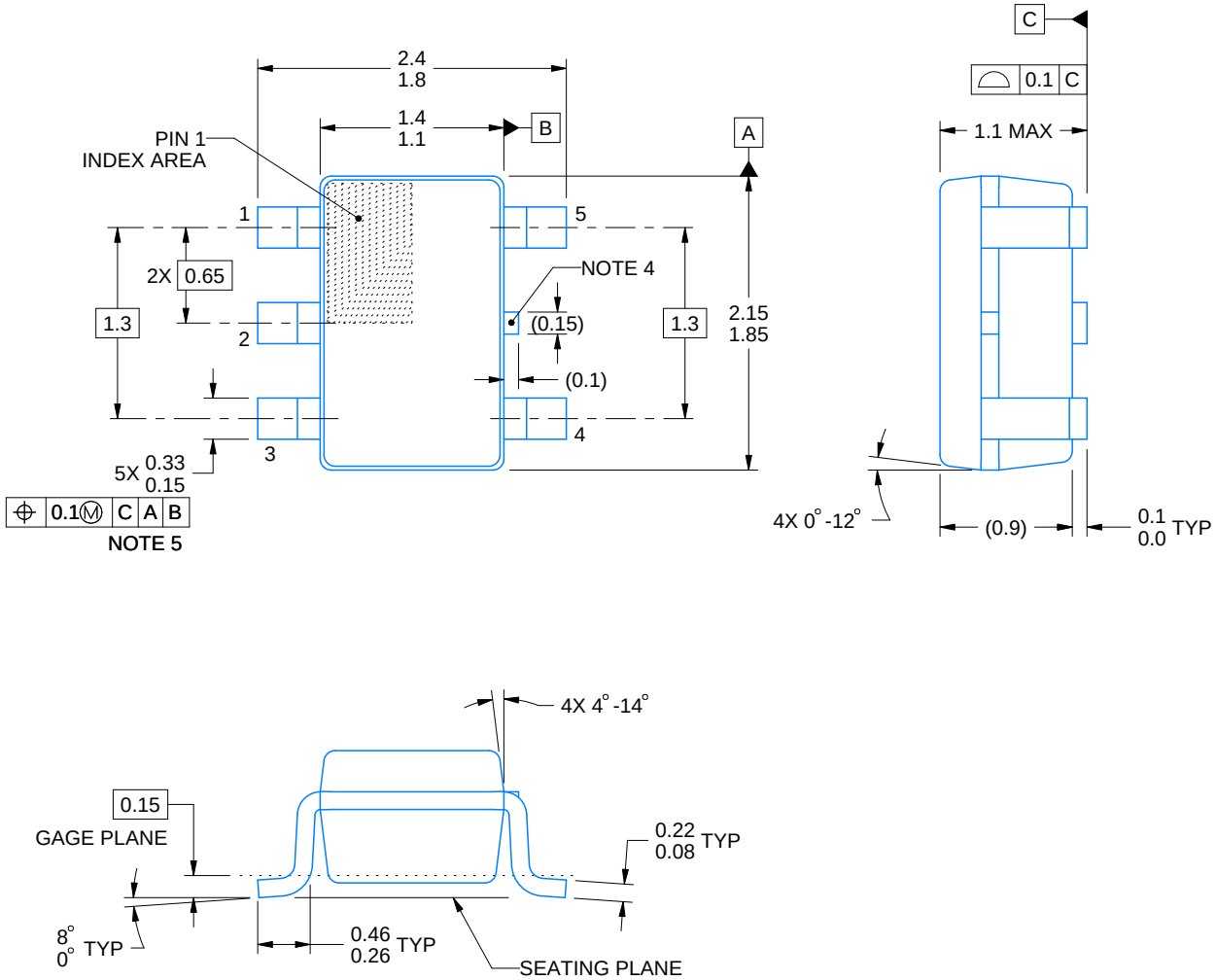

4214834/F 08/2024

NOTES:

1. All linear dimensions are in millimeters. Any dimensions in parenthesis are for reference only. Dimensioning and tolerancing per ASME Y14.5M.
2. This drawing is subject to change without notice.
3. Refernce JEDEC MO-203.
4. Support pin may differ or may not be present.
5. Lead width does not comply with JEDEC.
6. Body dimensions do not include mold flash, protrusions, or gate burrs. Mold flash, protrusions, or gate burrs shall not exceed 0.25mm per side

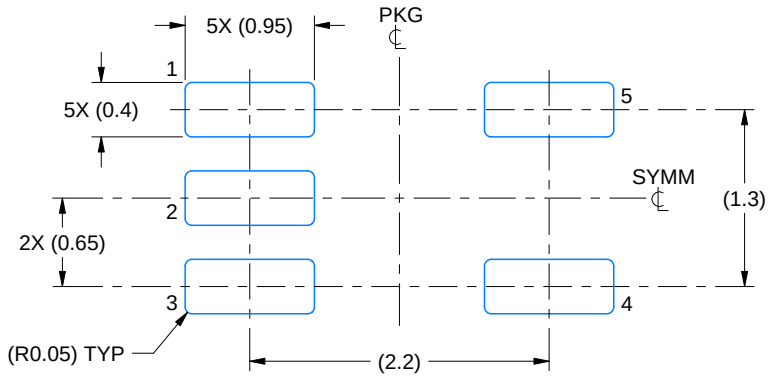

LAND PATTERN EXAMPLE
EXPOSED METAL SHOWN
SCALE:18X

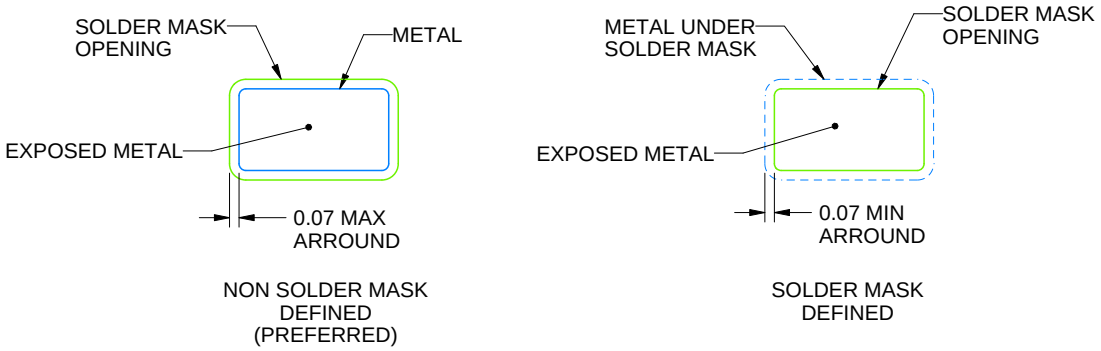

SOLDER MASK DETAILS

4214834/F 08/2024

NOTES: (continued)

7. Publication IPC-7351 may have alternate designs.
8. Solder mask tolerances between and around signal pads can vary based on board fabrication site.

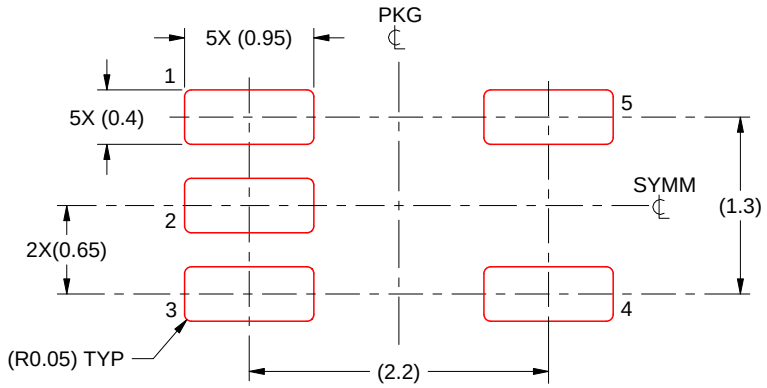

SOLDER PASTE EXAMPLE
BASED ON 0.125 THICK STENCIL
SCALE:18X

4214834/F 08/2024

NOTES: (continued)

9. Laser cutting apertures with trapezoidal walls and rounded corners may offer better paste release. IPC-7525 may have alternate design recommendations.
10. Board assembly site may have different recommendations for stencil design.

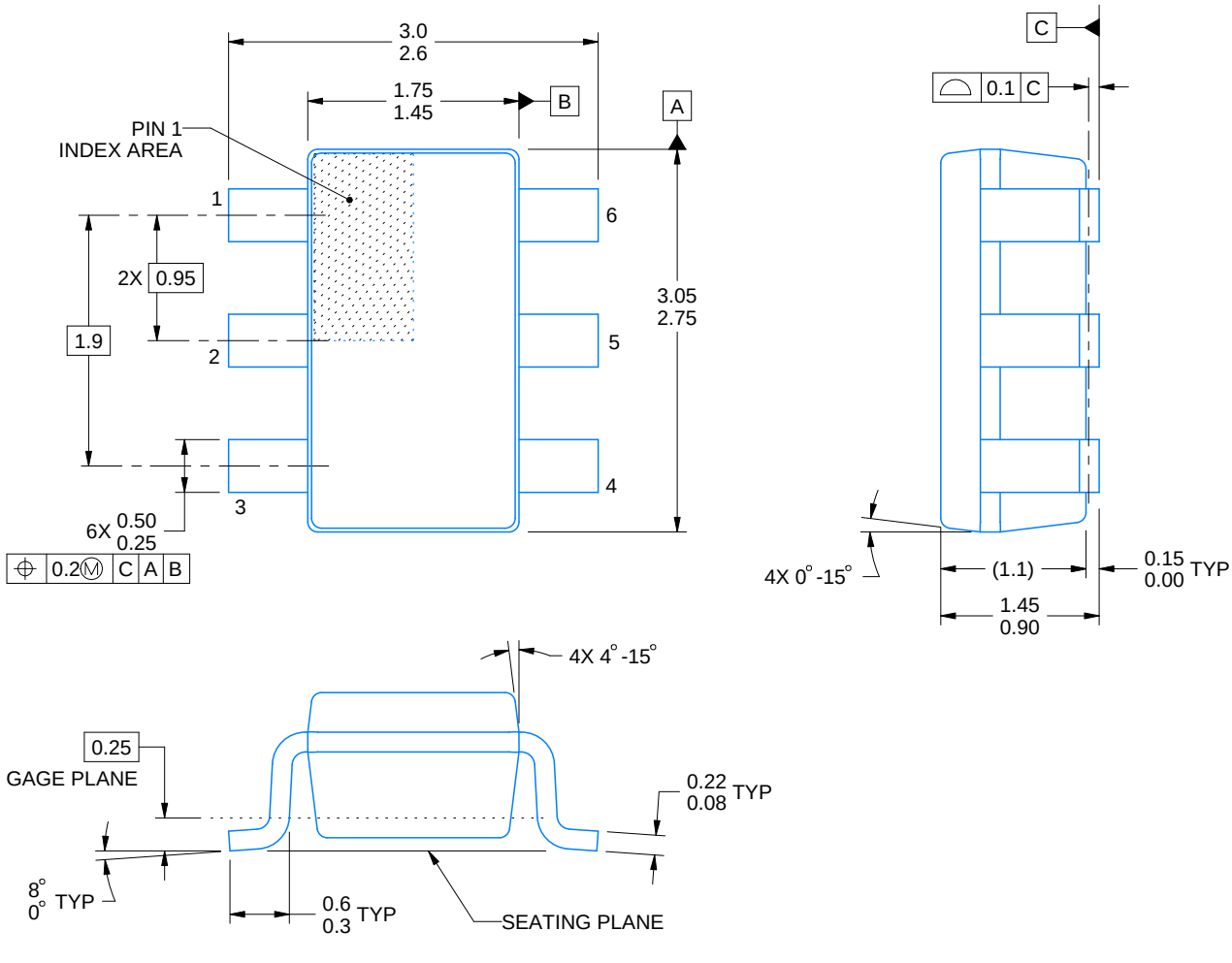

4214840/G 08/2024

NOTES:

1. All linear dimensions are in millimeters. Any dimensions in parenthesis are for reference only. Dimensioning and tolerancing per ASME Y14.5M.
2. This drawing is subject to change without notice.
3. Body dimensions do not include mold flash or protrusion. Mold flash and protrusion shall not exceed 0.25 per side.
4. Leads 1,2,3 may be wider than leads 4,5,6 for package orientation.
5. Refernce JEDEC MO-178.

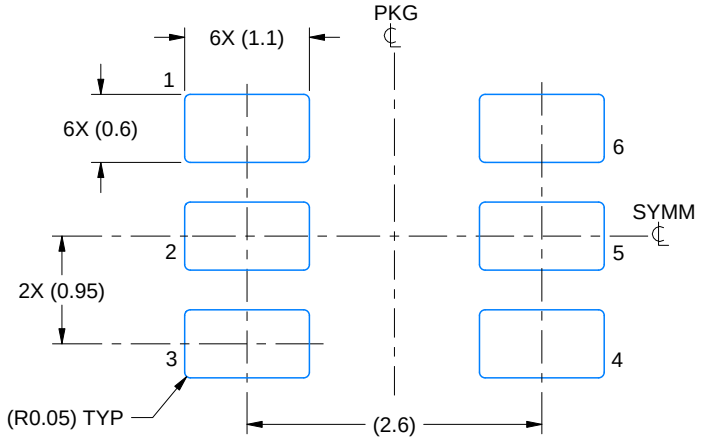

LAND PATTERN EXAMPLE
EXPOSED METAL SHOWN
SCALE:15X

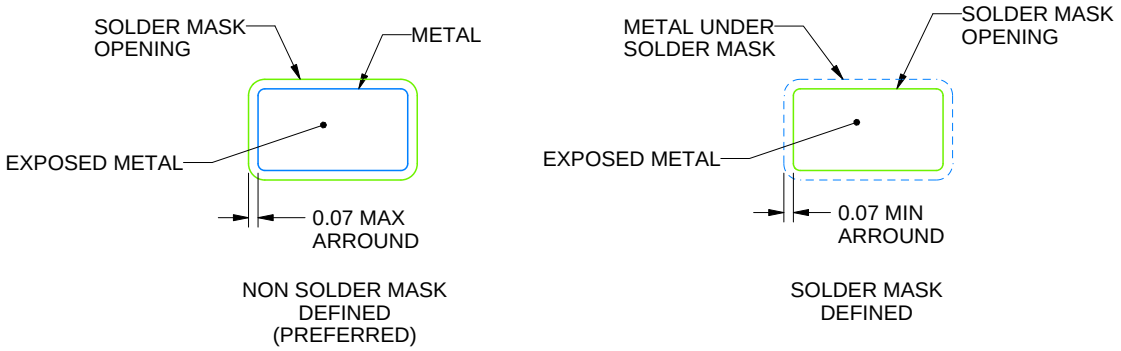

SOLDER MASK DETAILS

4214840/G 08/2024

NOTES: (continued)

6. Publication IPC-7351 may have alternate designs.
7. Solder mask tolerances between and around signal pads can vary based on board fabrication site.

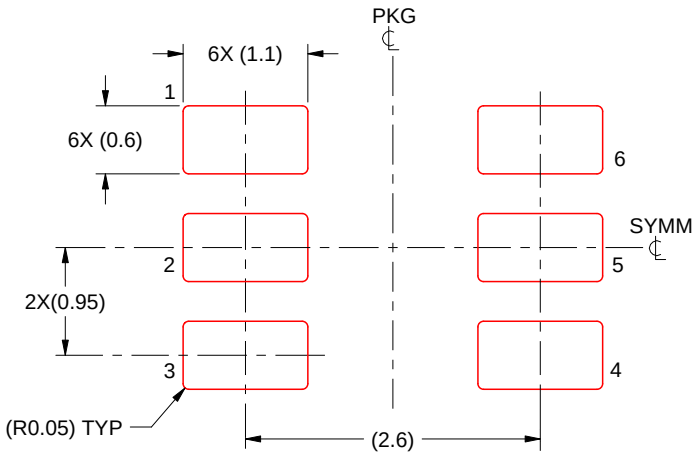

SOLDER PASTE EXAMPLE
BASED ON 0.125 mm THICK STENCIL
SCALE:15X

4214840/G 08/2024

NOTES: (continued)

8. Laser cutting apertures with trapezoidal walls and rounded corners may offer better paste release. IPC-7525 may have alternate design recommendations.
9. Board assembly site may have different recommendations for stencil design.

GENERIC PACKAGE VIEW

DSG 8

WSON - 0.8 mm max height

2 x 2, 0.5 mm pitch

PLASTIC SMALL OUTLINE - NO LEAD

This image is a representation of the package family, actual package may vary.
Refer to the product data sheet for package details.

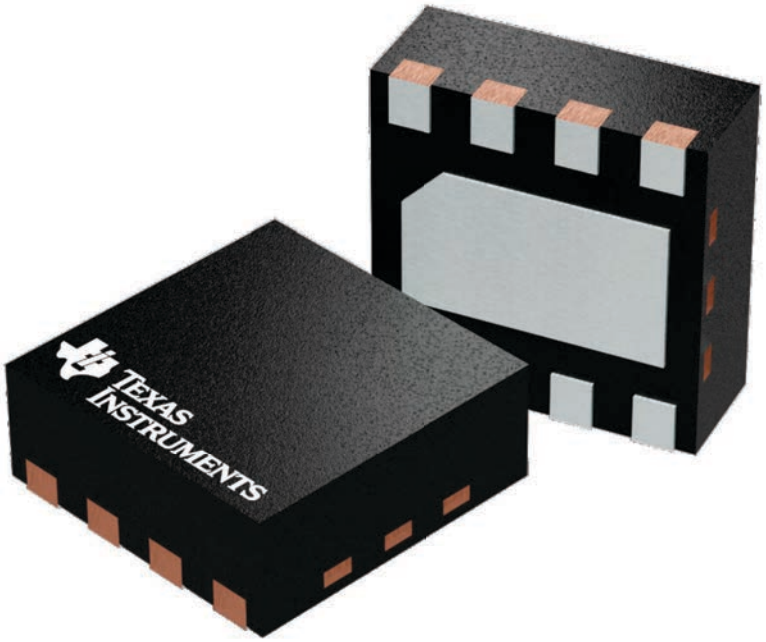

4224783/A

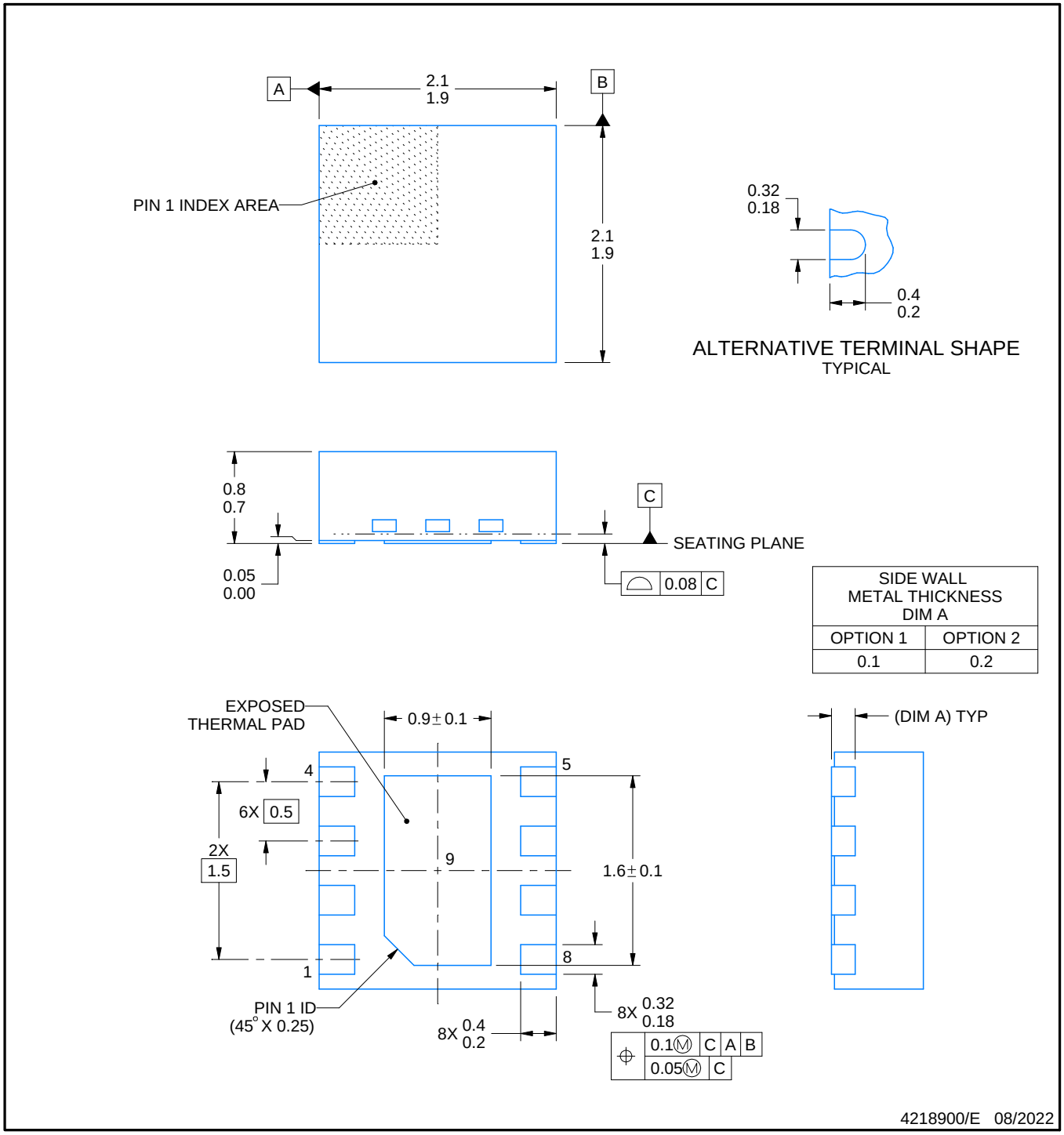

NOTES:

1. All linear dimensions are in millimeters. Any dimensions in parenthesis are for reference only. Dimensioning and tolerancing per ASME Y14.5M.
2. This drawing is subject to change without notice.
3. The package thermal pad must be soldered to the printed circuit board for thermal and mechanical performance.

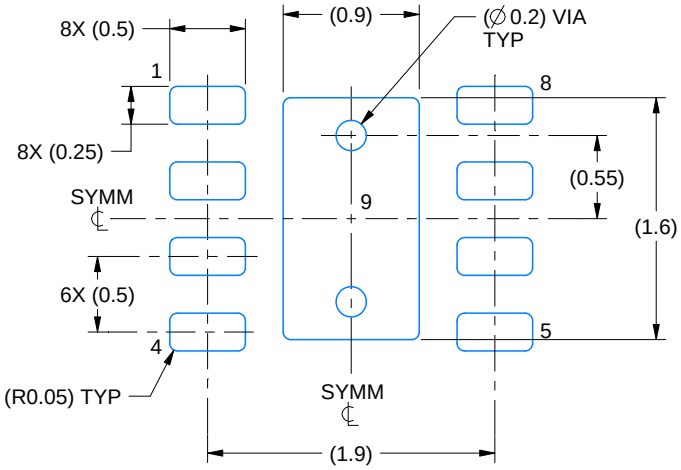

LAND PATTERN EXAMPLE
SCALE:20X

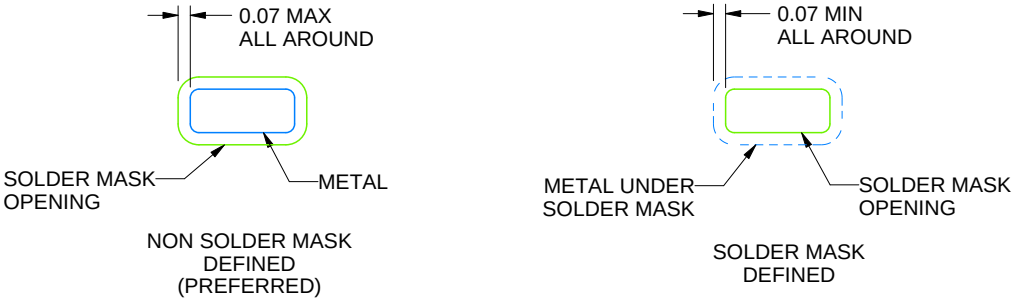

SOLDER MASK DETAILS

4218900/E 08/2022

NOTES: (continued)

4. This package is designed to be soldered to a thermal pad on the board. For more information, see Texas Instruments literature number SLUA271 (www.ti.com/lit/slua271).
5. Vias are optional depending on application, refer to device data sheet. If any vias are implemented, refer to their locations shown on this view. It is recommended that vias under paste be filled, plugged or tented.

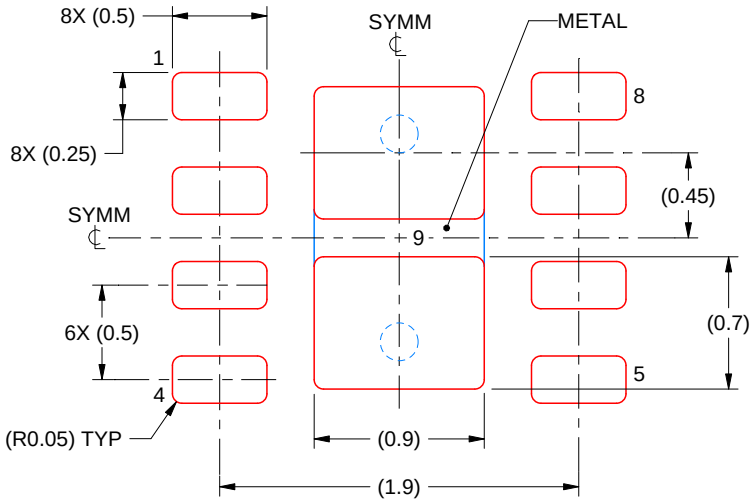

SOLDER PASTE EXAMPLE
BASED ON 0.125 mm THICK STENCIL

EXPOSED PAD 9:
87% PRINTED SOLDER COVERAGE BY AREA UNDER PACKAGE
SCALE:25X

4218900/E 08/2022

NOTES: (continued)

6. Laser cutting apertures with trapezoidal walls and rounded corners may offer better paste release. IPC-7525 may have alternate design recommendations.

PW0014A

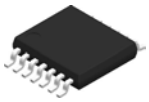

PACKAGE OUTLINE

TSSOP - 1.2 mm max height

SMALL OUTLINE PACKAGE

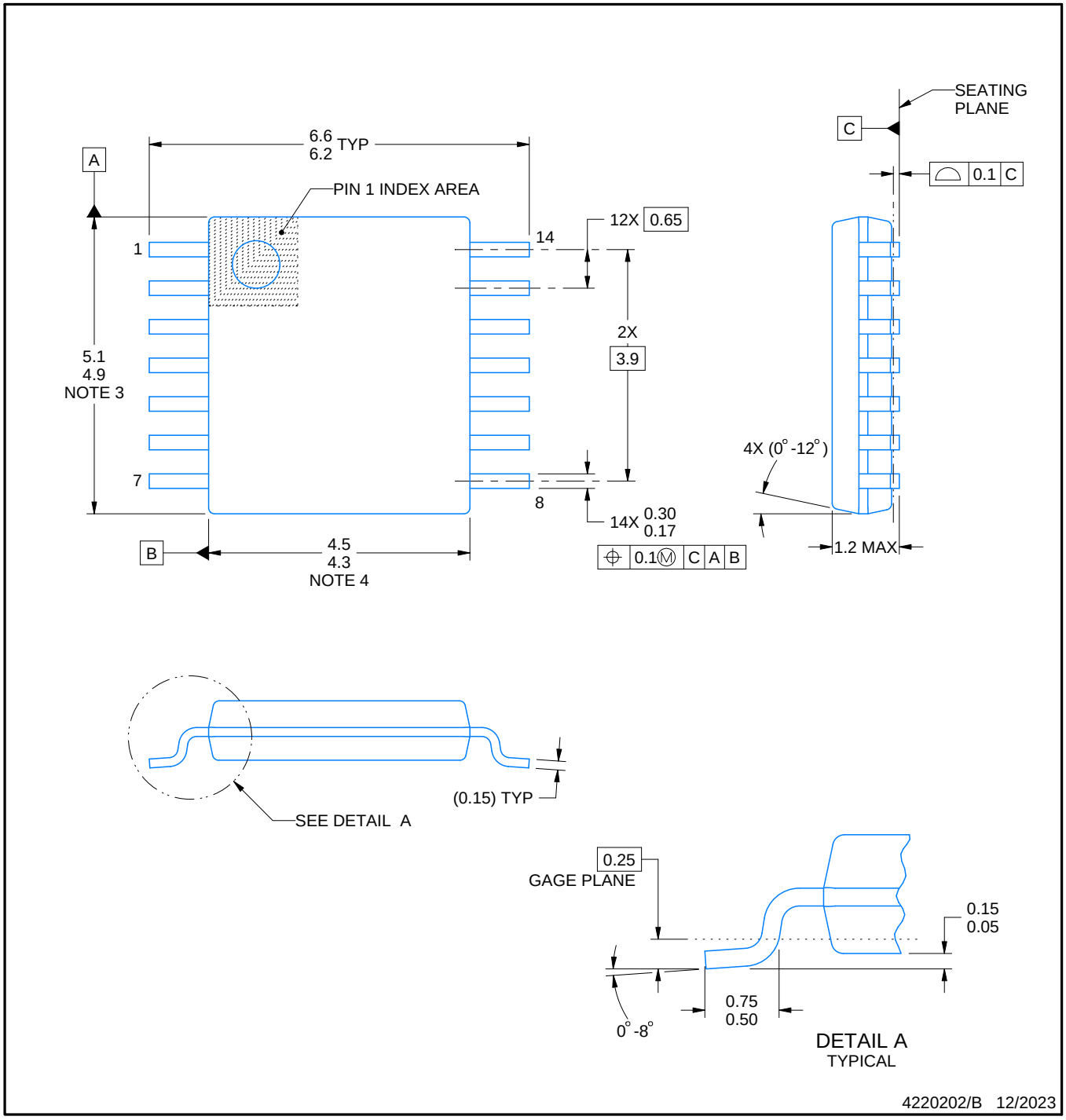

NOTES:

1. All linear dimensions are in millimeters. Any dimensions in parenthesis are for reference only. Dimensioning and tolerancing per ASME Y14.5M.
2. This drawing is subject to change without notice.
3. This dimension does not include mold flash, protrusions, or gate burrs. Mold flash, protrusions, or gate burrs shall not exceed 0.15 mm per side.
4. This dimension does not include interlead flash. Interlead flash shall not exceed 0.25 mm per side.
5. Reference JEDEC registration MO-153.

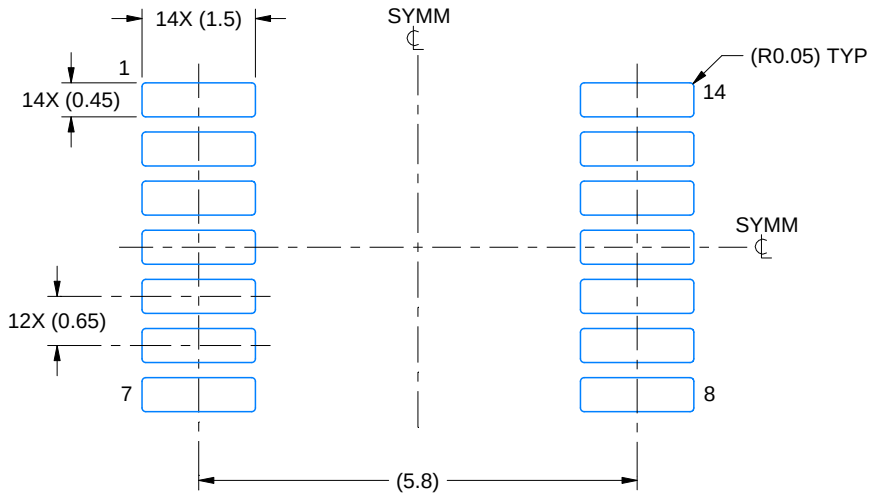

LAND PATTERN EXAMPLE
EXPOSED METAL SHOWN
SCALE: 10X

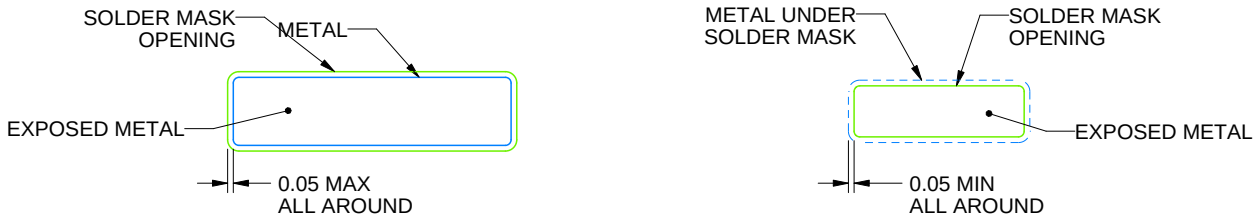

NON-SOLDER MASK DEFINED (PREFERRED)

SOLDER MASK DEFINED

SOLDER MASK DETAILS

4220202/B 12/2023

NOTES: (continued)

6. Publication IPC-7351 may have alternate designs.
7. Solder mask tolerances between and around signal pads can vary based on board fabrication site.

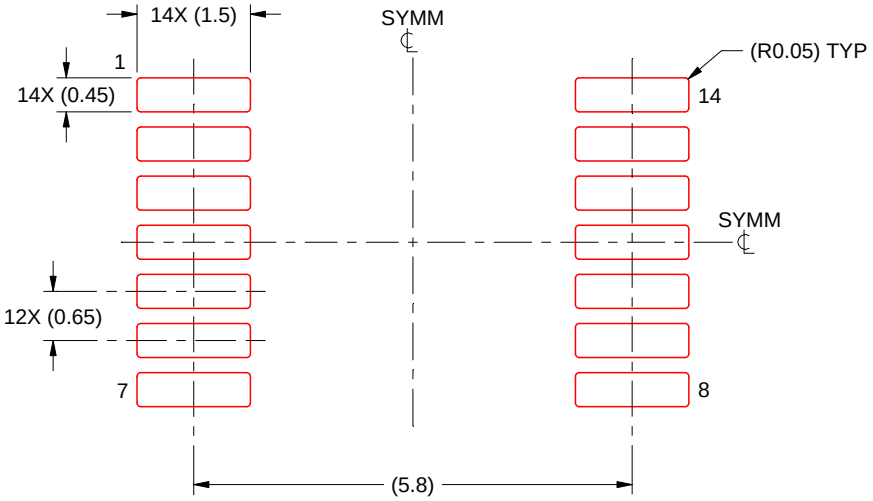

SOLDER PASTE EXAMPLE
BASED ON 0.125 mm THICK STENCIL
SCALE: 10X

4220202/B 12/2023

NOTES: (continued)

8. Laser cutting apertures with trapezoidal walls and rounded corners may offer better paste release. IPC-7525 may have alternate design recommendations.
9. Board assembly site may have different recommendations for stencil design.

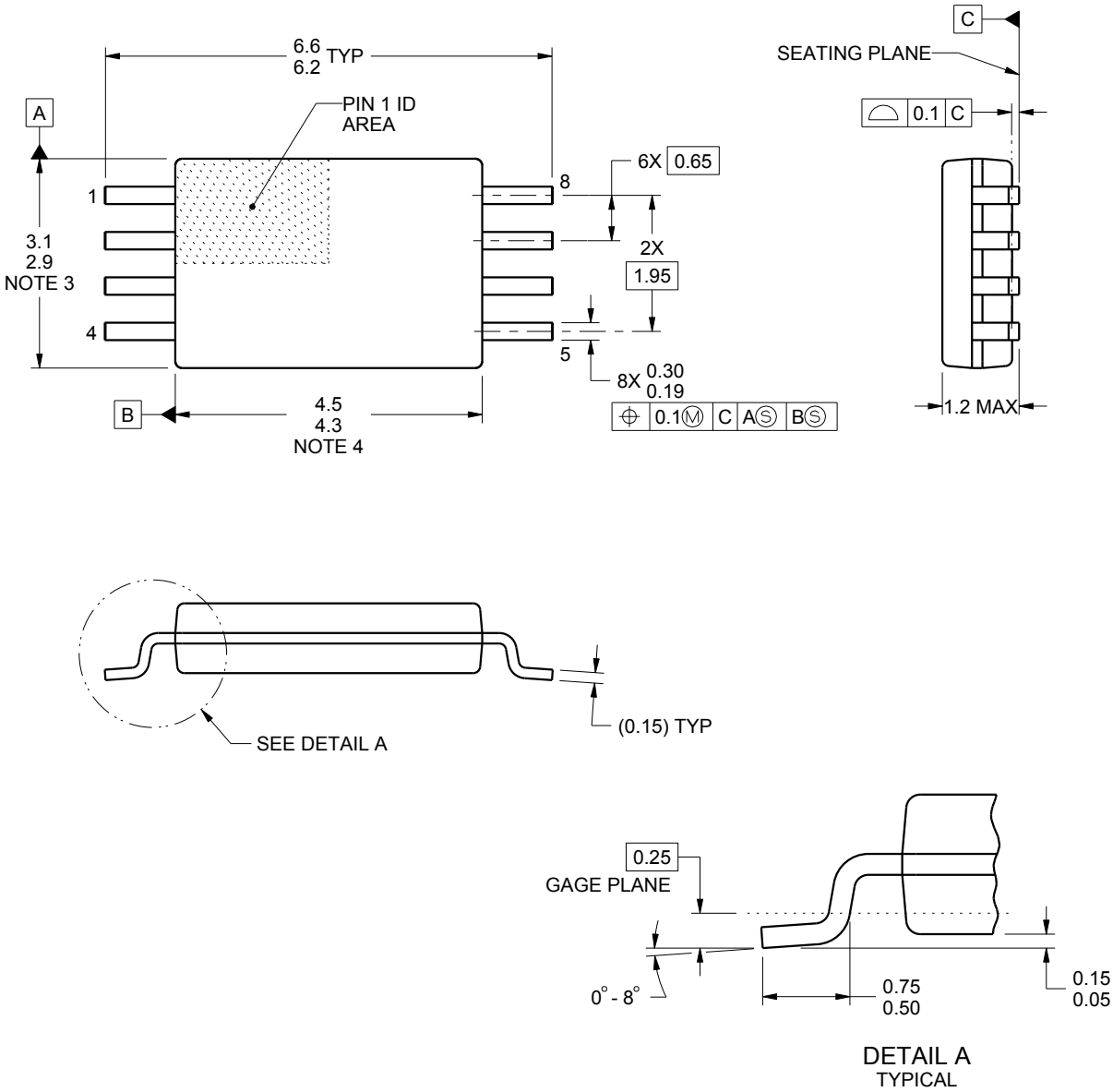

NOTES:

1. All linear dimensions are in millimeters. Any dimensions in parenthesis are for reference only. Dimensioning and tolerancing per ASME Y14.5M.
2. This drawing is subject to change without notice.
3. This dimension does not include mold flash, protrusions, or gate burrs. Mold flash, protrusions, or gate burrs shall not exceed 0.15 mm per side.
4. This dimension does not include interlead flash. Interlead flash shall not exceed 0.25 mm per side.
5. Reference JEDEC registration MO-153, variation AA.

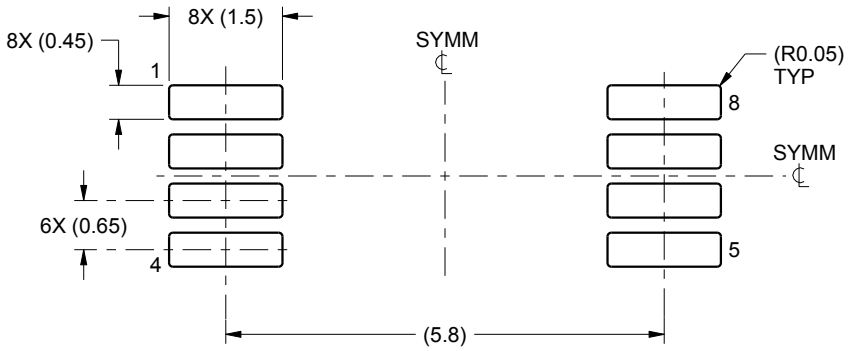

LAND PATTERN EXAMPLE
SCALE:10X

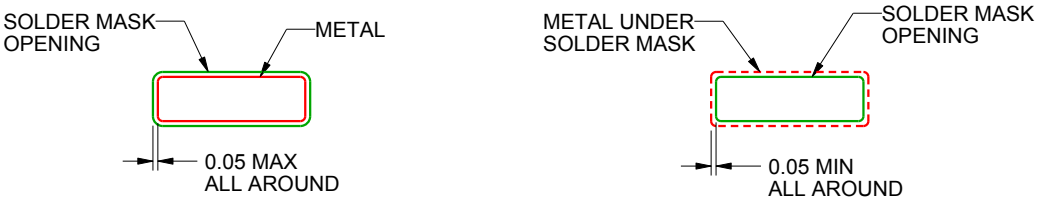

NON SOLDER MASK
DEFINED

SOLDER MASK
DEFINED

SOLDER MASK DETAILS
NOT TO SCALE

4221848/A 02/2015

NOTES: (continued)

6. Publication IPC-7351 may have alternate designs.
7. Solder mask tolerances between and around signal pads can vary based on board fabrication site.

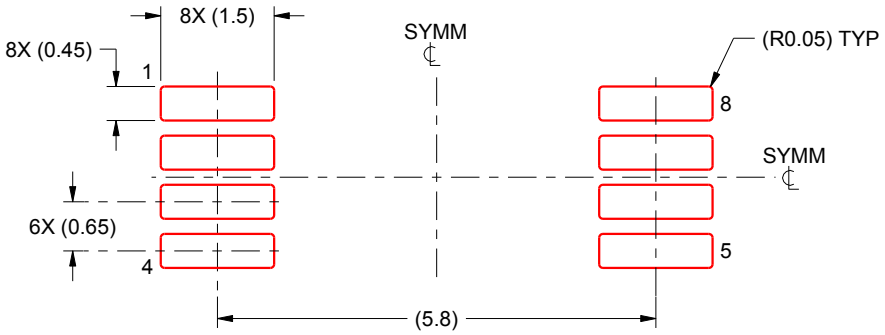

SOLDER PASTE EXAMPLE
BASED ON 0.125 mm THICK STENCIL
SCALE:10X

4221848/A 02/2015

NOTES: (continued)

8. Laser cutting apertures with trapezoidal walls and rounded corners may offer better paste release. IPC-7525 may have alternate design recommendations.
9. Board assembly site may have different recommendations for stencil design.

GENERIC PACKAGE VIEW

RUC 14

X2QFN - 0.4 mm max height

2 x 2, 0.4 mm pitch

PLASTIC QUAD FLATPACK - NO LEAD

This image is a representation of the package family, actual package may vary.
Refer to the product data sheet for package details.

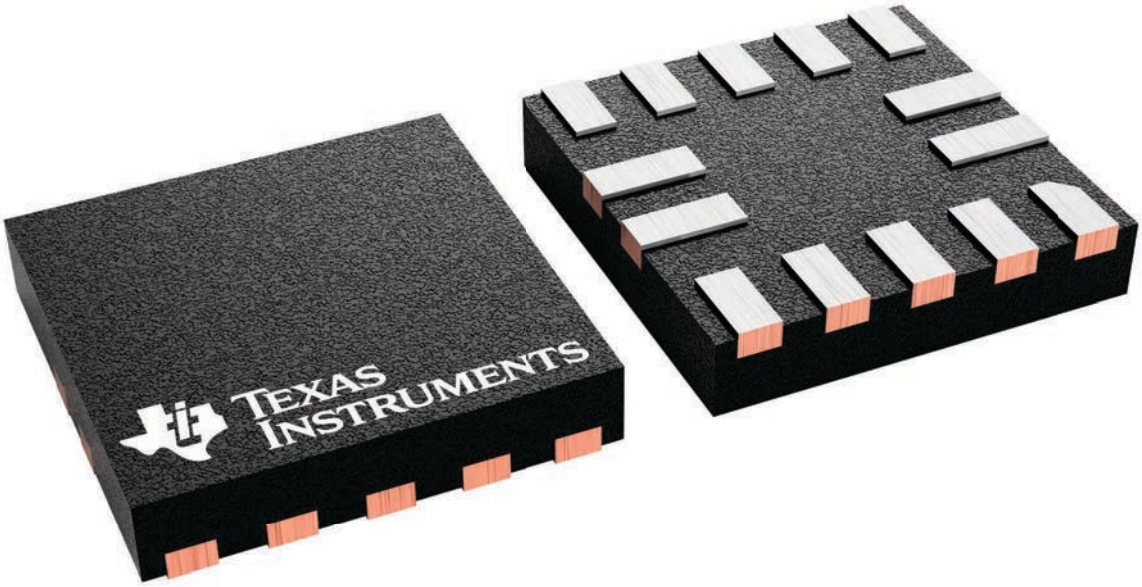

4229871/A

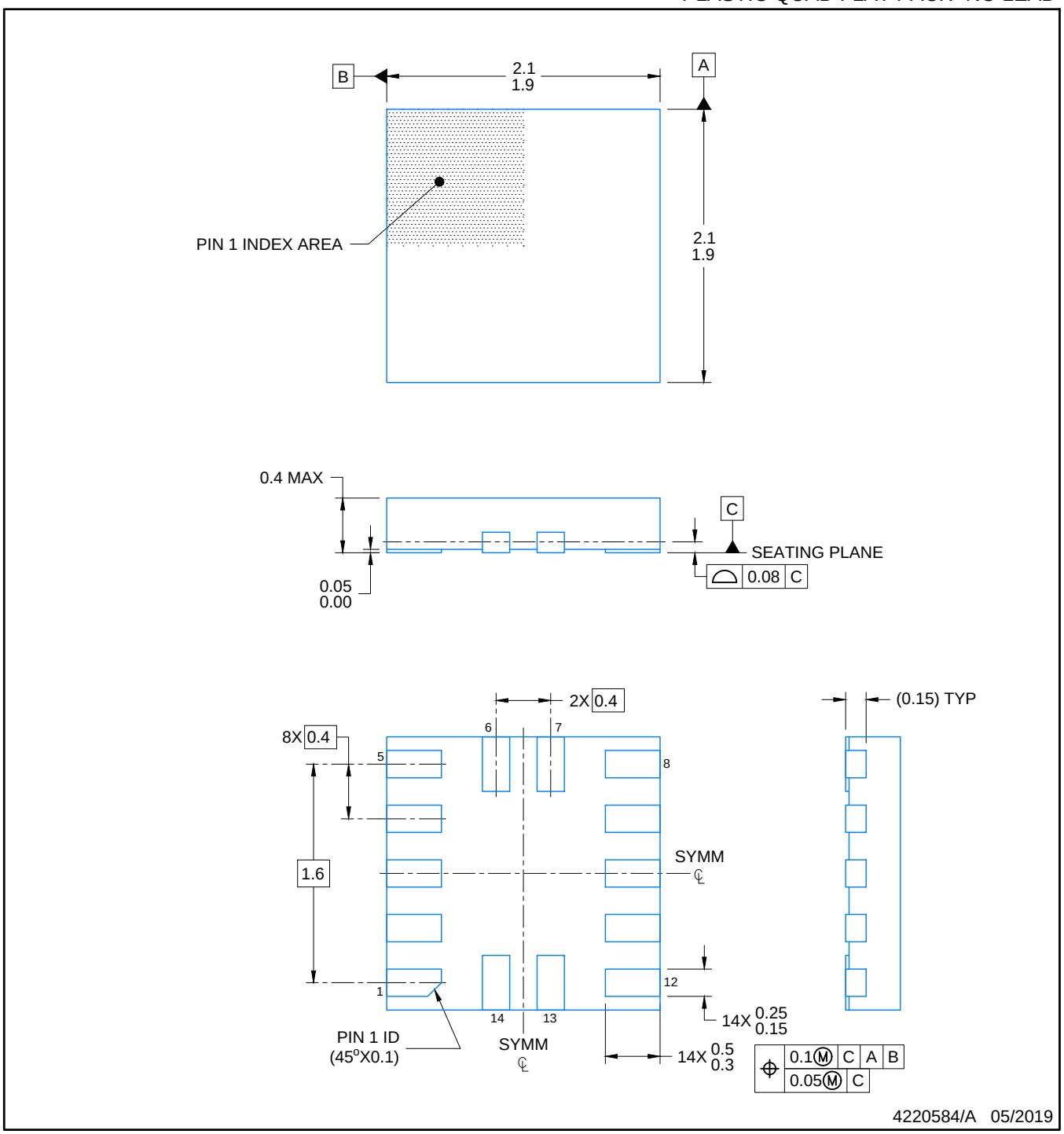

NOTES:

1. All linear dimensions are in millimeters. Any dimensions in parenthesis are for reference only. Dimensioning and tolerancing per ASME Y14.5M.
2. This drawing is subject to change without notice.

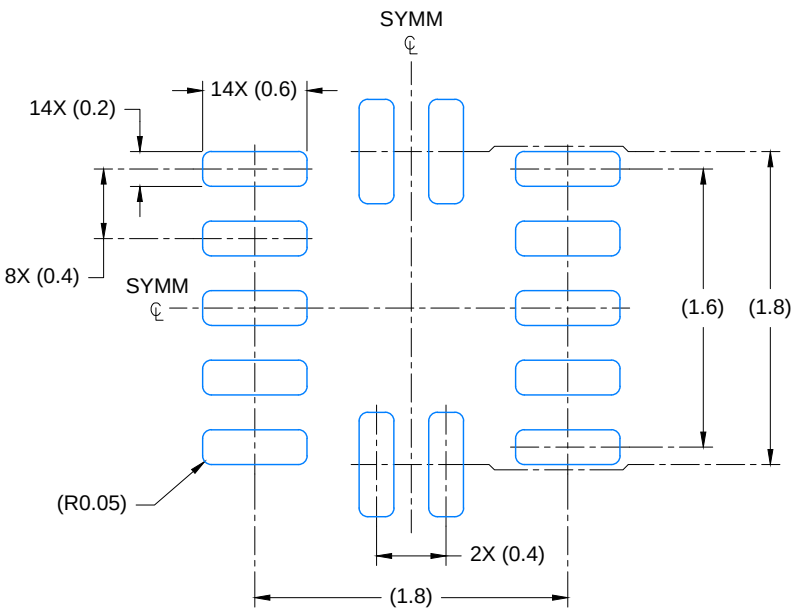

LAND PATTERN EXAMPLE
EXPOSED METAL SHOWN
SCALE: 23X

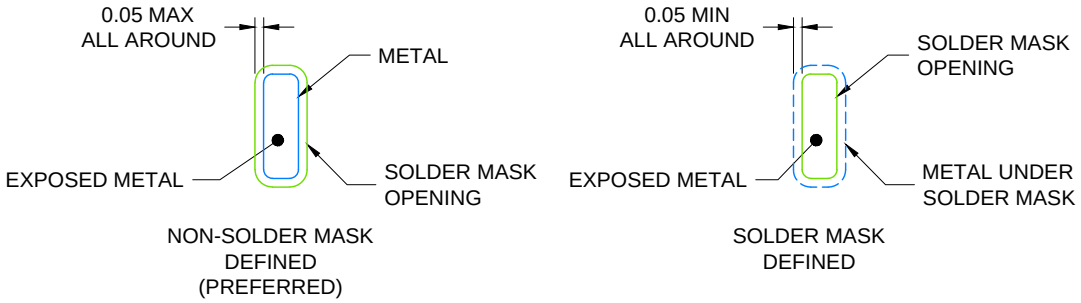

SOLDER MASK DETAILS

4220584/A 05/2019

NOTES: (continued)

3. For more information, see Texas Instruments literature number SLUA271 (www.ti.com/lit/slua271).

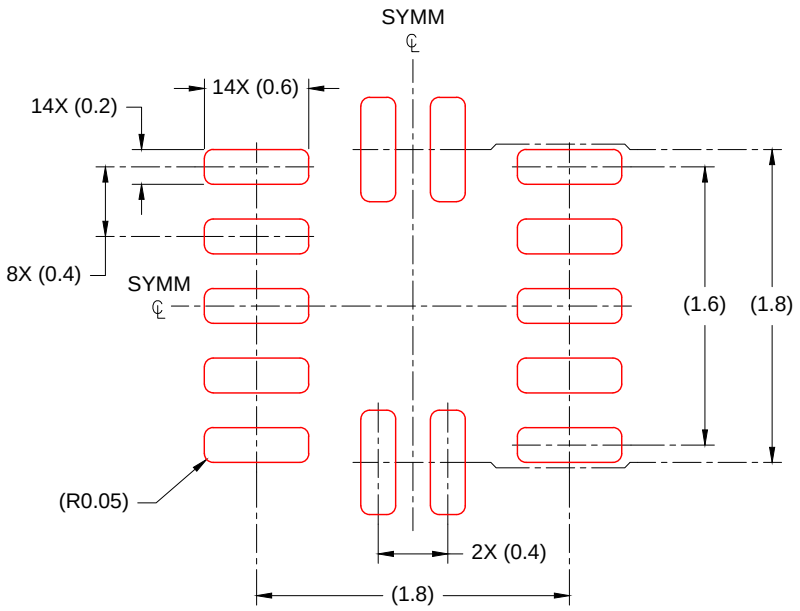

SOLDER PASTE EXAMPLE
BASED ON 0.100mm THICK STENCIL
SCALE: 23X

4220584/A 05/2019

NOTES: (continued)

4. Laser cutting apertures with trapezoidal walls and rounded corners may offer better paste release. IPC-7525 may have alternate design recommendations.

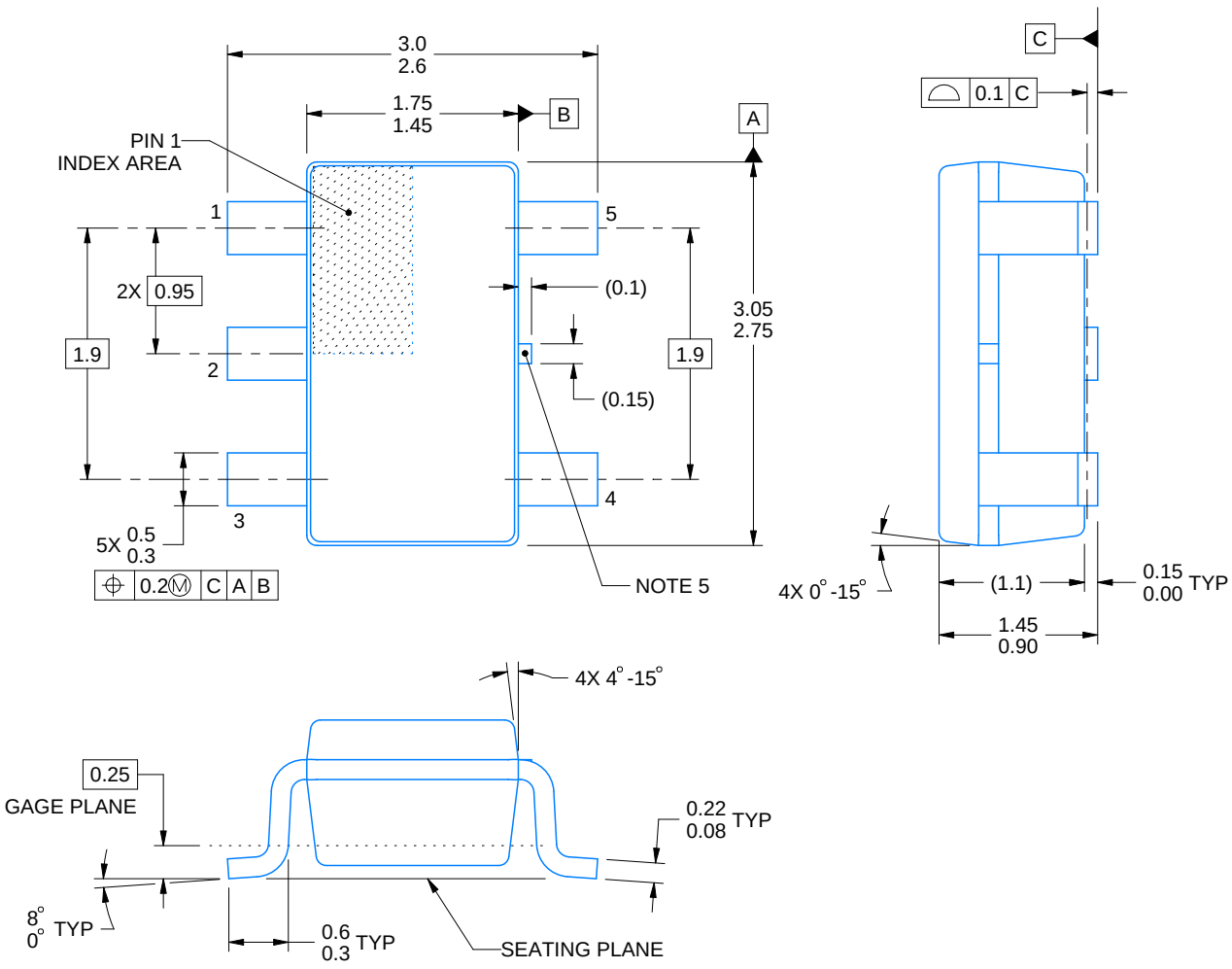

4214839/K 08/2024

NOTES:

1. All linear dimensions are in millimeters. Any dimensions in parenthesis are for reference only. Dimensioning and tolerancing per ASME Y14.5M.
2. This drawing is subject to change without notice.
3. Refernce JEDEC MO-178.
4. Body dimensions do not include mold flash, protrusions, or gate burrs. Mold flash, protrusions, or gate burrs shall not exceed 0.25 mm per side.
5. Support pin may differ or may not be present.

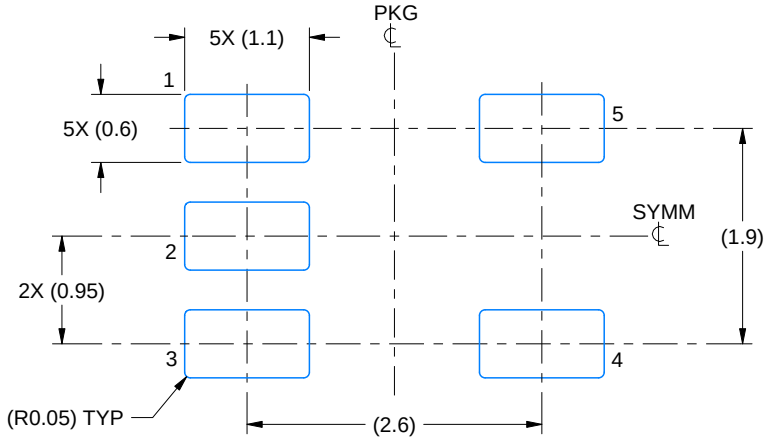

LAND PATTERN EXAMPLE
EXPOSED METAL SHOWN
SCALE:15X

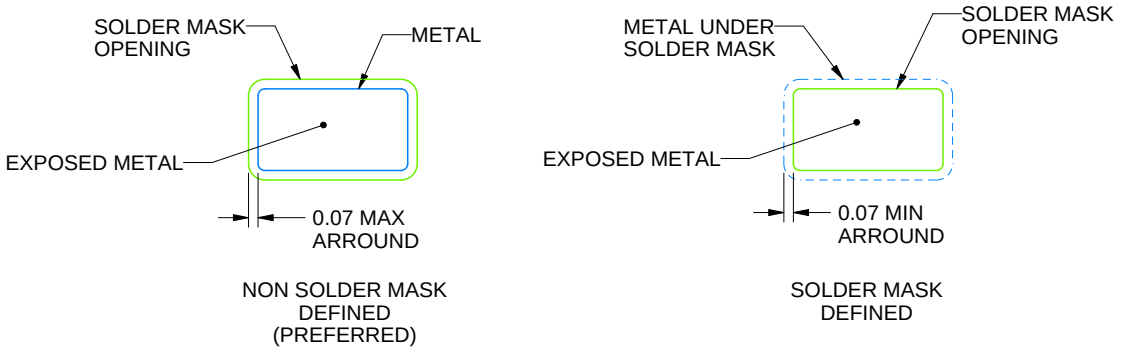

SOLDER MASK DETAILS

4214839/K 08/2024

NOTES: (continued)

6. Publication IPC-7351 may have alternate designs.
7. Solder mask tolerances between and around signal pads can vary based on board fabrication site.

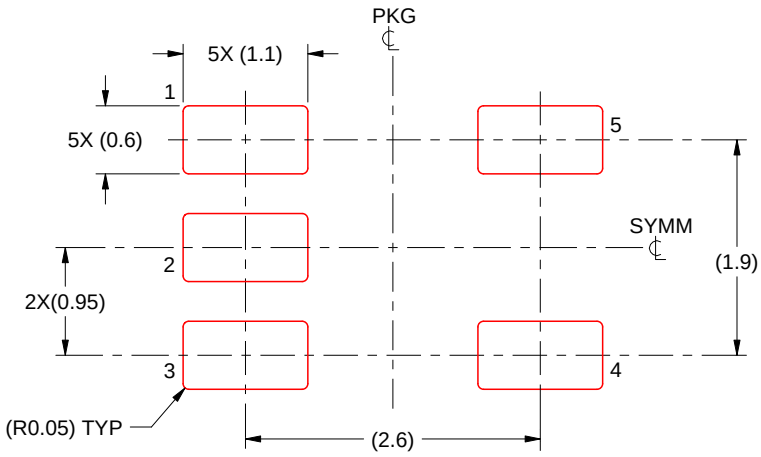

SOLDER PASTE EXAMPLE
BASED ON 0.125 mm THICK STENCIL
SCALE:15X

4214839/K 08/2024

NOTES: (continued)

8. Laser cutting apertures with trapezoidal walls and rounded corners may offer better paste release. IPC-7525 may have alternate design recommendations.
9. Board assembly site may have different recommendations for stencil design.

PACKAGE OUTLINE

DGK0008A

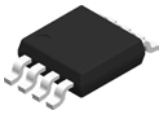

VSSOP - 1.1 mm max height

SMALL OUTLINE PACKAGE

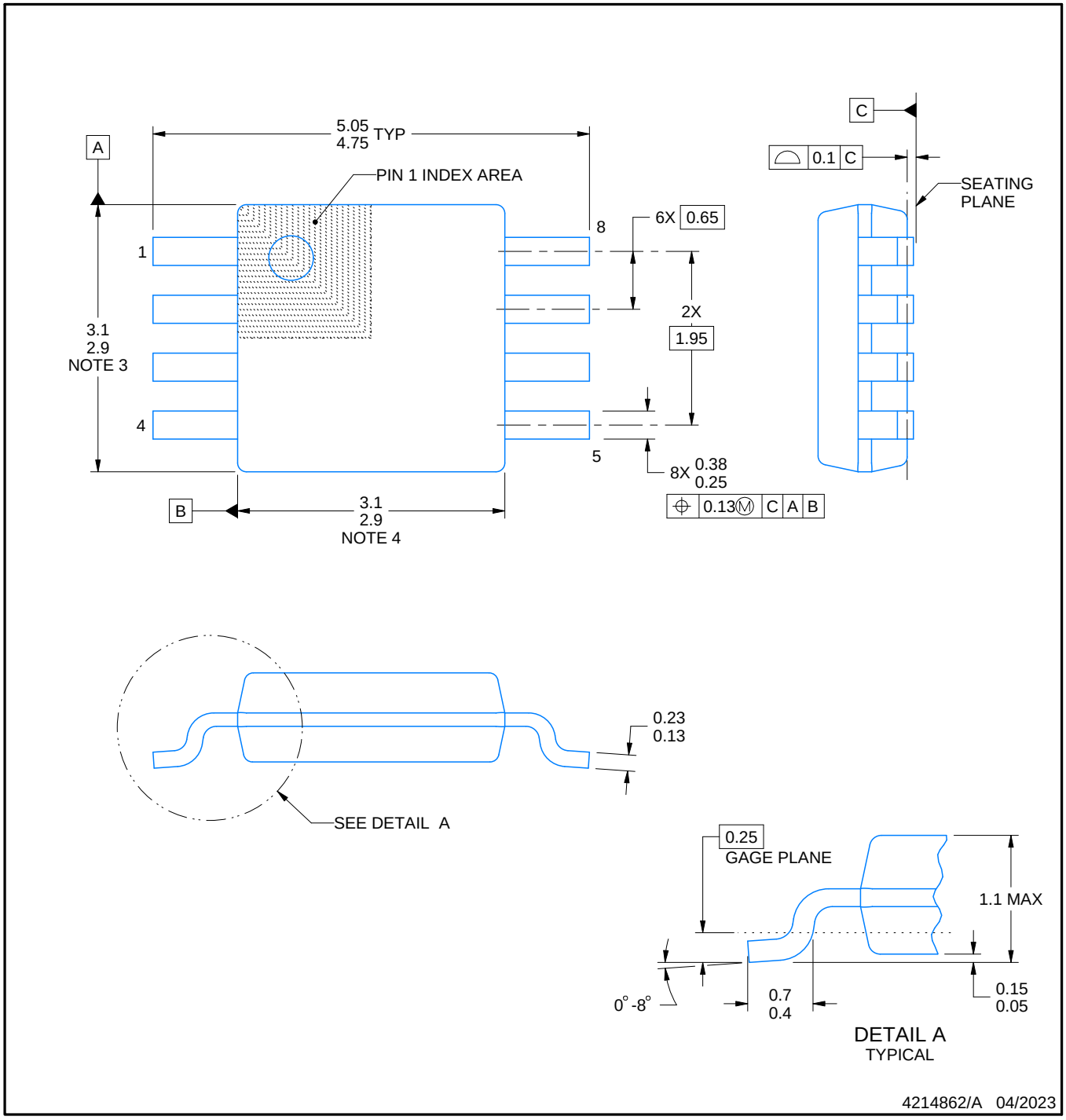

PowerPAD is a trademark of Texas Instruments.

NOTES:

1. All linear dimensions are in millimeters. Any dimensions in parenthesis are for reference only. Dimensioning and tolerancing per ASME Y14.5M.
2. This drawing is subject to change without notice.
3. This dimension does not include mold flash, protrusions, or gate burrs. Mold flash, protrusions, or gate burrs shall not exceed 0.15 mm per side.
4. This dimension does not include interlead flash. Interlead flash shall not exceed 0.25 mm per side.
5. Reference JEDEC registration MO-187.

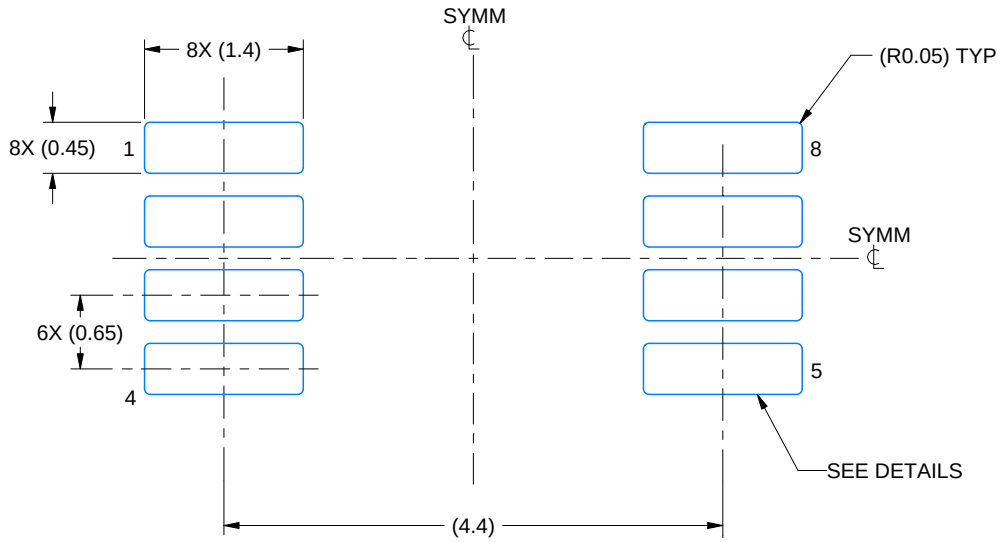

LAND PATTERN EXAMPLE
EXPOSED METAL SHOWN
SCALE: 15X

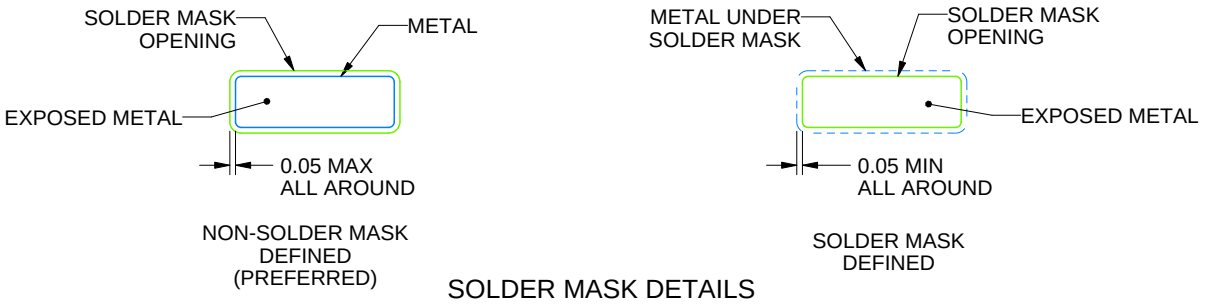

SOLDER MASK DETAILS

4214862/A 04/2023

NOTES: (continued)

6. Publication IPC-7351 may have alternate designs.
7. Solder mask tolerances between and around signal pads can vary based on board fabrication site.
8. Vias are optional depending on application, refer to device data sheet. If any vias are implemented, refer to their locations shown on this view. It is recommended that vias under paste be filled, plugged or tented.
9. Size of metal pad may vary due to creepage requirement.

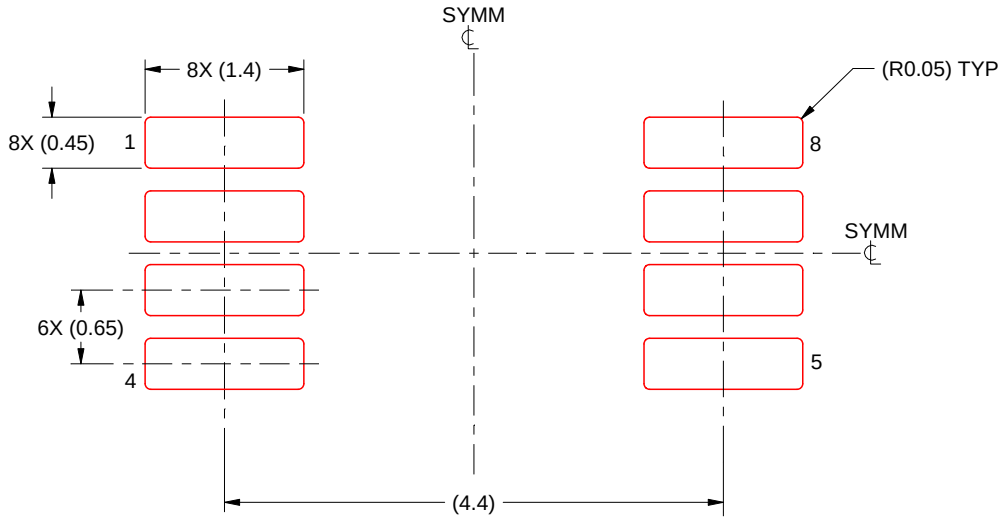

SOLDER PASTE EXAMPLE
SCALE: 15X

4214862/A 04/2023

NOTES: (continued)

11. Laser cutting apertures with trapezoidal walls and rounded corners may offer better paste release. IPC-7525 may have alternate design recommendations.
12. Board assembly site may have different recommendations for stencil design.

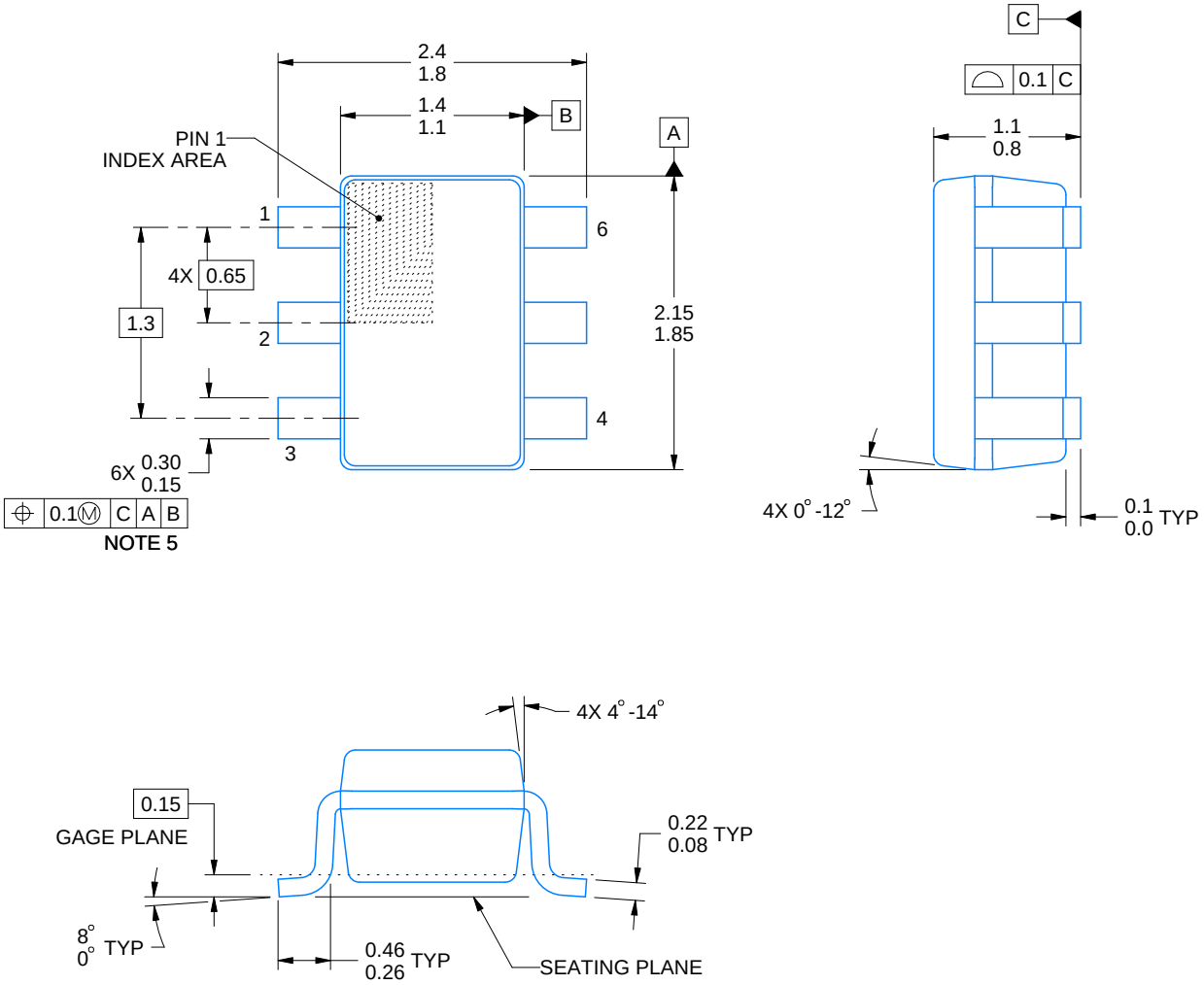

4214835/C 08/2024

NOTES:

1. All linear dimensions are in millimeters. Any dimensions in parenthesis are for reference only. Dimensioning and tolerancing per ASME Y14.5M.
2. This drawing is subject to change without notice.
3. Body dimensions do not include mold flash or protrusion. Mold flash and protrusion shall not exceed 0.15 per side.
4. Falls within JEDEC MO-203 variation AB.

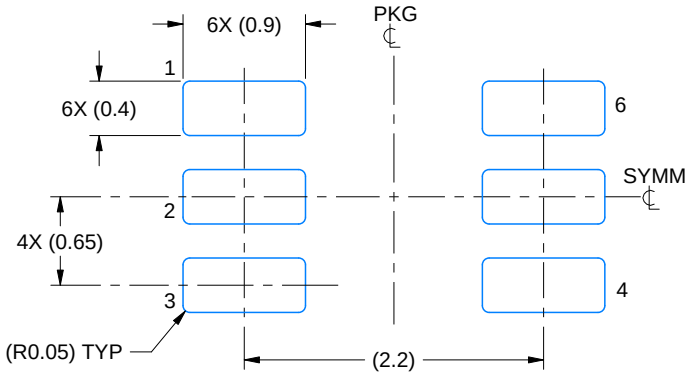

LAND PATTERN EXAMPLE
EXPOSED METAL SHOWN
SCALE:18X

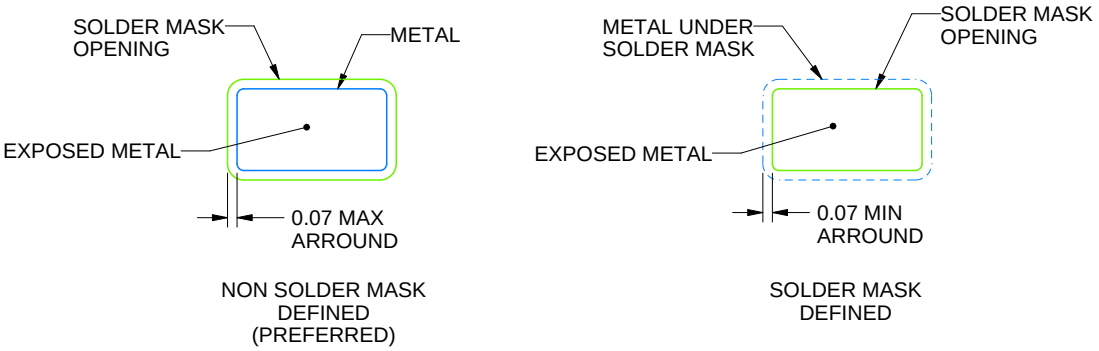

SOLDER MASK DETAILS

4214835/C 08/2024

NOTES: (continued)

5. Publication IPC-7351 may have alternate designs.
6. Solder mask tolerances between and around signal pads can vary based on board fabrication site.

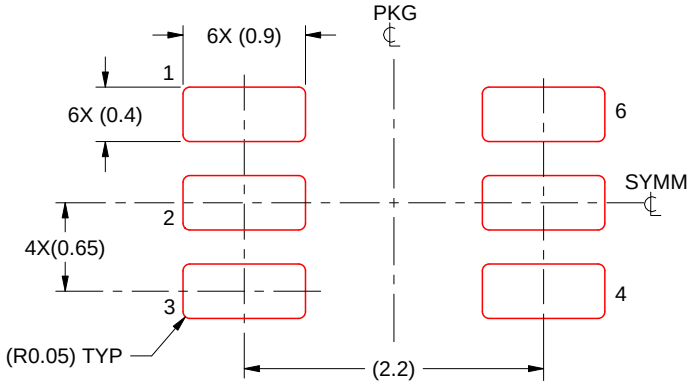

SOLDER PASTE EXAMPLE
BASED ON 0.125 THICK STENCIL
SCALE:18X

4214835/C 08/2024

NOTES: (continued)

7. Laser cutting apertures with trapezoidal walls and rounded corners may offer better paste release. IPC-7525 may have alternate design recommendations.
8. Board assembly site may have different recommendations for stencil design.

GENERIC PACKAGE VIEW

RTE 16

WQFN - 0.8 mm max height

3 x 3, 0.5 mm pitch

PLASTIC QUAD FLATPACK - NO LEAD

This image is a representation of the package family, actual package may vary.
Refer to the product data sheet for package details.

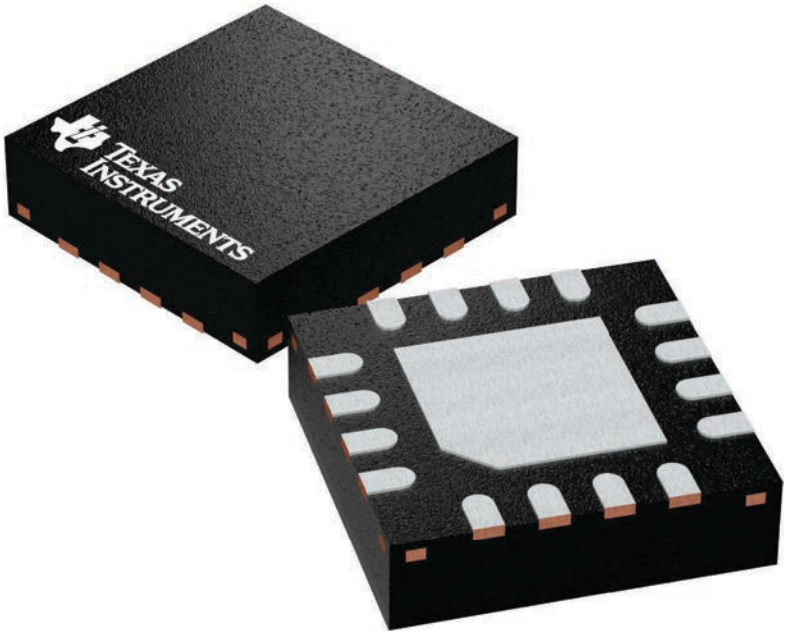

4225944/A

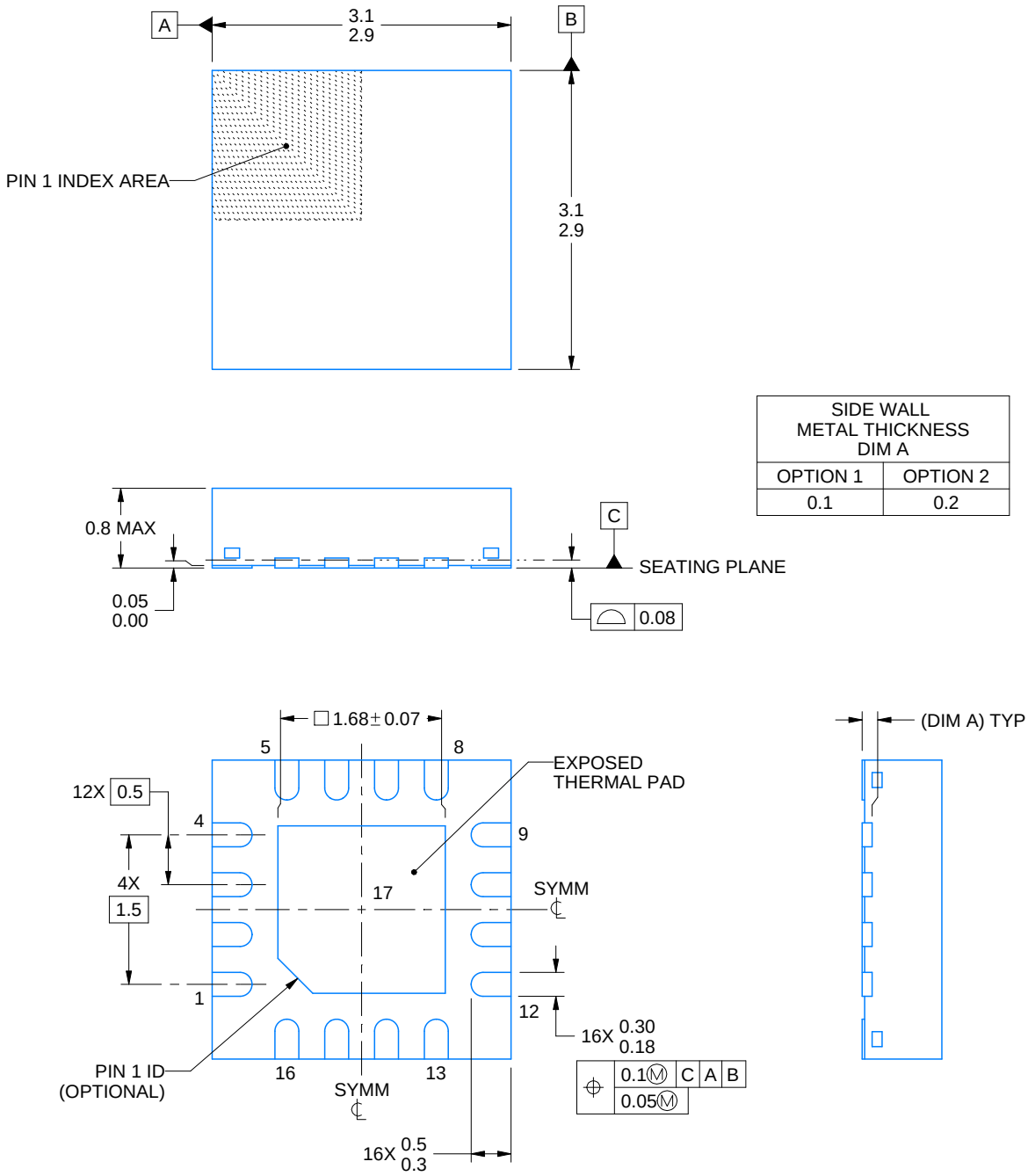

SIDE WALL METAL THICKNESS DIM A	
OPTION 1	OPTION 2
0.1	0.2

NOTES:

1. All linear dimensions are in millimeters. Any dimensions in parenthesis are for reference only. Dimensioning and tolerancing per ASME Y14.5M.
2. This drawing is subject to change without notice.
3. The package thermal pad must be soldered to the printed circuit board for thermal and mechanical performance.

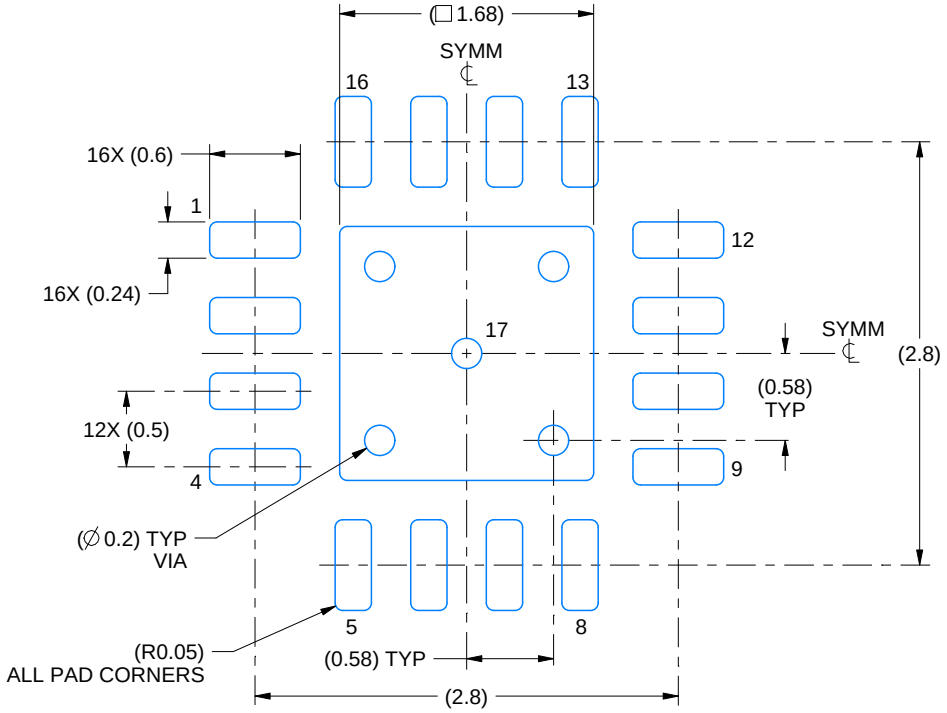

LAND PATTERN EXAMPLE
EXPOSED METAL SHOWN
SCALE:20X

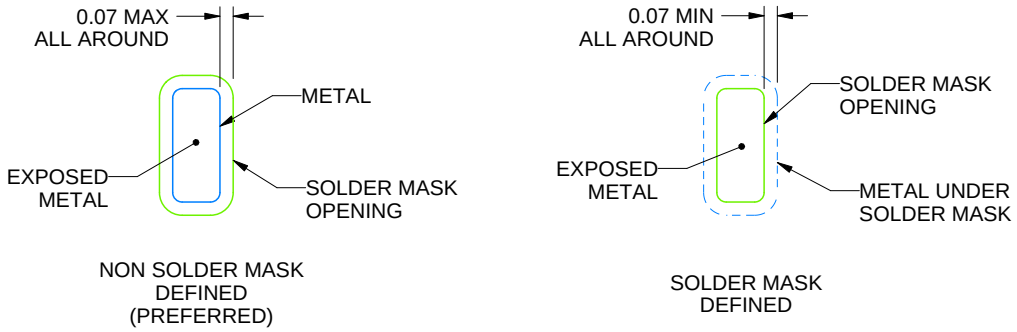

SOLDER MASK DETAILS

4219117/B 04/2022

NOTES: (continued)

4. This package is designed to be soldered to a thermal pad on the board. For more information, see Texas Instruments literature number SLUA271 (www.ti.com/lit/slua271).
5. Vias are optional depending on application, refer to device data sheet. If any vias are implemented, refer to their locations shown on this view. It is recommended that vias under paste be filled, plugged or tented.

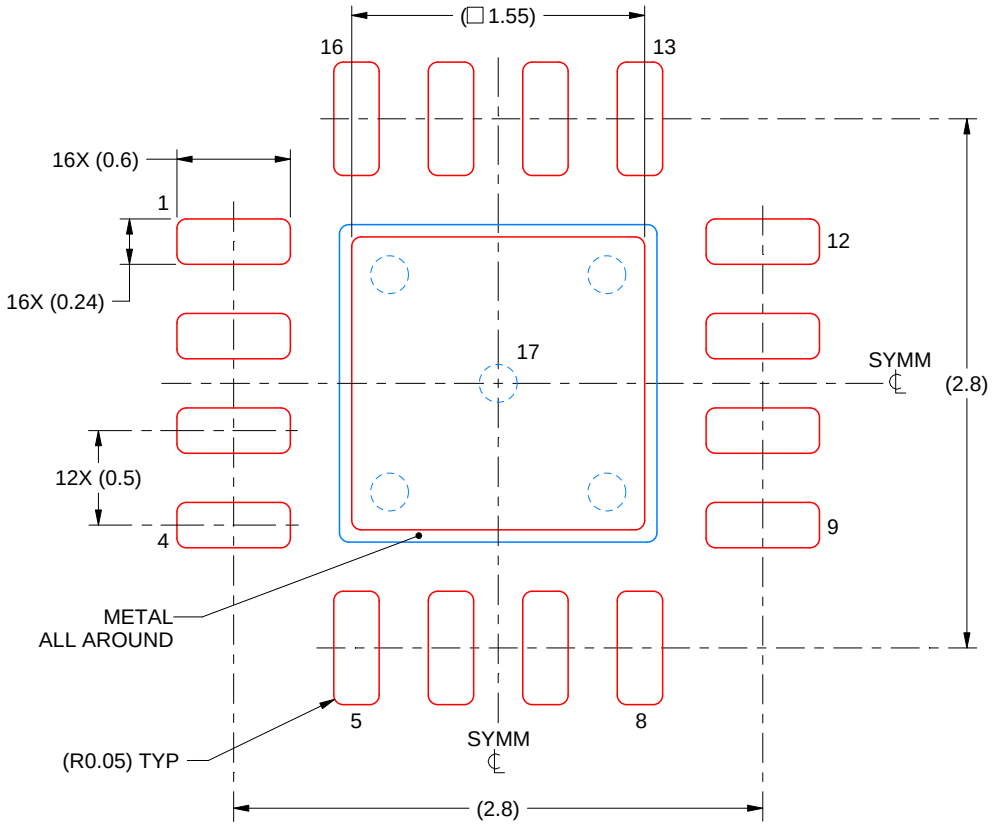

SOLDER PASTE EXAMPLE
BASED ON 0.125 mm THICK STENCIL

EXPOSED PAD 17:
85% PRINTED SOLDER COVERAGE BY AREA UNDER PACKAGE
SCALE:25X

4219117/B 04/2022

NOTES: (continued)

6. Laser cutting apertures with trapezoidal walls and rounded corners may offer better paste release. IPC-7525 may have alternate design recommendations.

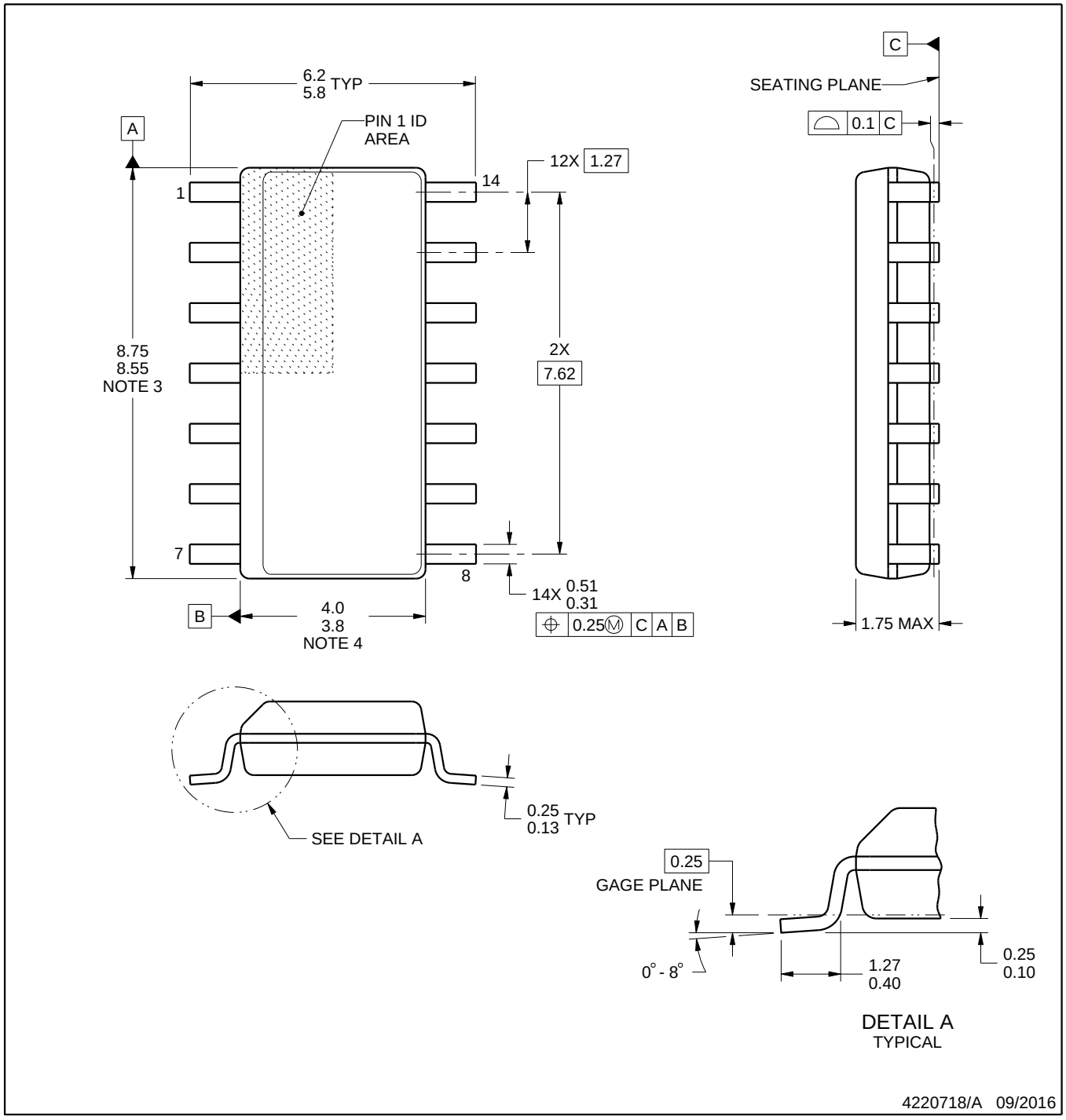

NOTES:

1. All linear dimensions are in millimeters. Dimensions in parenthesis are for reference only. Dimensioning and tolerancing per ASME Y14.5M.
2. This drawing is subject to change without notice.
3. This dimension does not include mold flash, protrusions, or gate burrs. Mold flash, protrusions, or gate burrs shall not exceed 0.15 mm, per side.
4. This dimension does not include interlead flash. Interlead flash shall not exceed 0.43 mm, per side.
5. Reference JEDEC registration MS-012, variation AB.

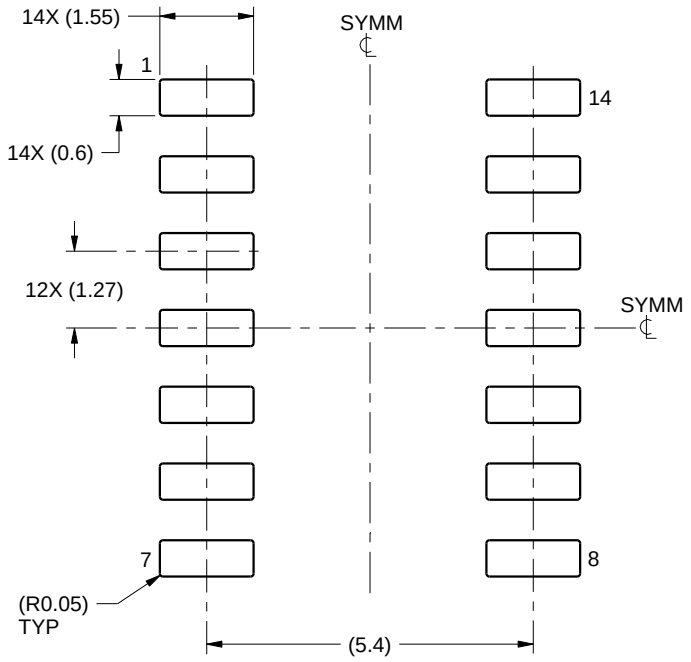

LAND PATTERN EXAMPLE
SCALE:8X

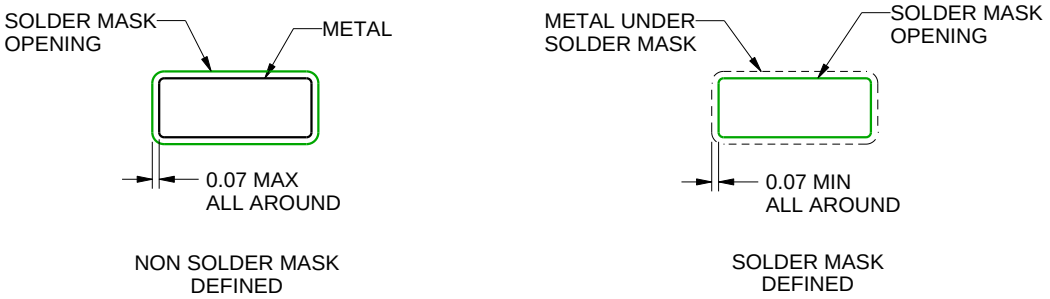

SOLDER MASK DETAILS

4220718/A 09/2016

NOTES: (continued)

6. Publication IPC-7351 may have alternate designs.
7. Solder mask tolerances between and around signal pads can vary based on board fabrication site.

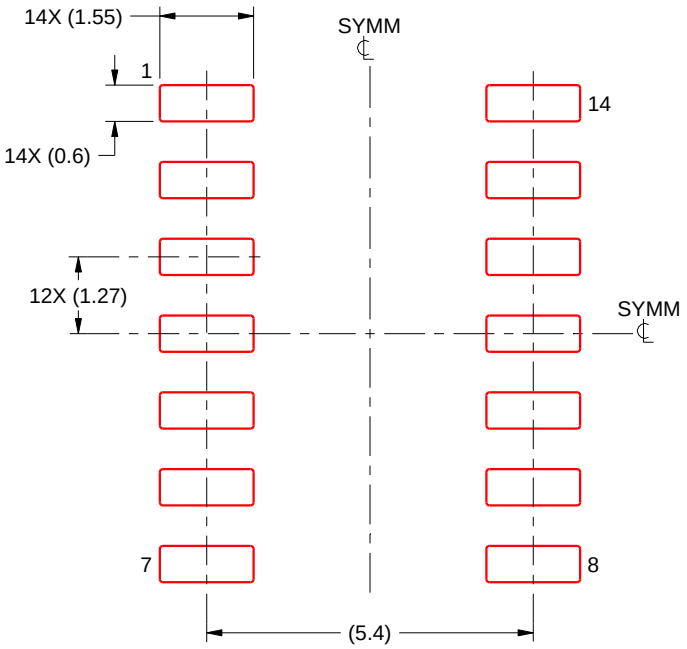

SOLDER PASTE EXAMPLE
BASED ON 0.125 mm THICK STENCIL
SCALE:8X

4220718/A 09/2016

NOTES: (continued)

8. Laser cutting apertures with trapezoidal walls and rounded corners may offer better paste release. IPC-7525 may have alternate design recommendations.
9. Board assembly site may have different recommendations for stencil design.

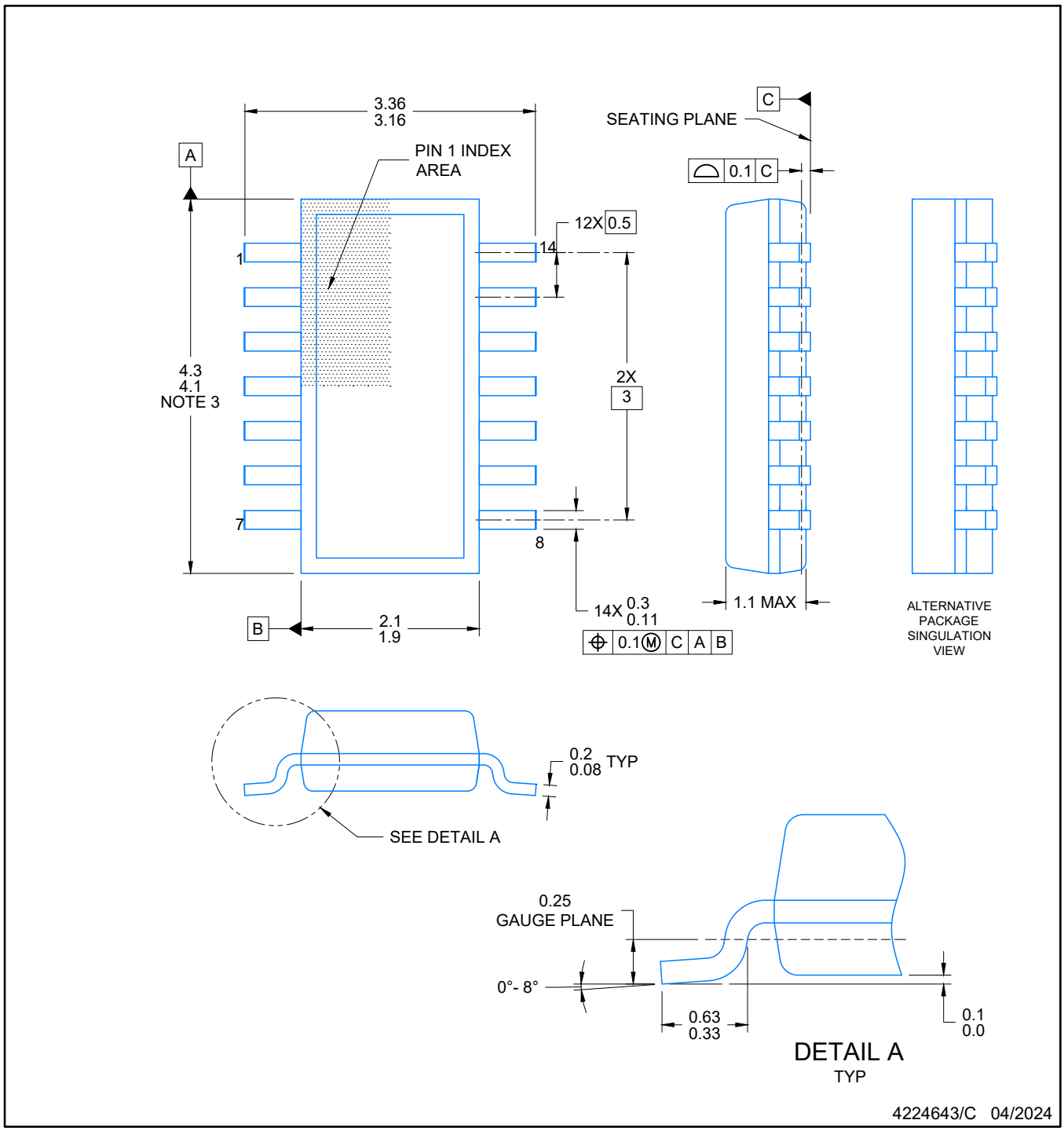

NOTES:

1. All linear dimensions are in millimeters. Any dimensions in parenthesis are for reference only. Dimensioning and tolerancing per ASME Y14.5M.
2. This drawing is subject to change without notice.
3. This dimension does not include mold flash, protrusions, or gate burrs. Mold flash, protrusions, or gate burrs shall not exceed 0.15 per side.
4. This dimension does not include interlead flash. Interlead flash shall not exceed 0.50 per side.
5. Reference JEDEC Registration MO-345, Variation AB

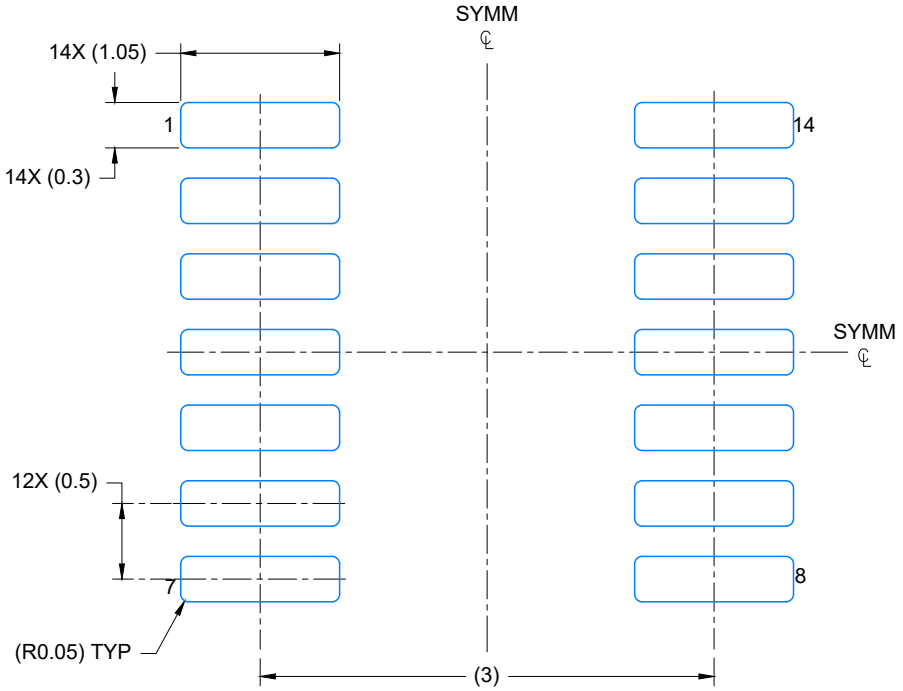

LAND PATTERN EXAMPLE
EXPOSED METAL SHOWN
SCALE: 20X

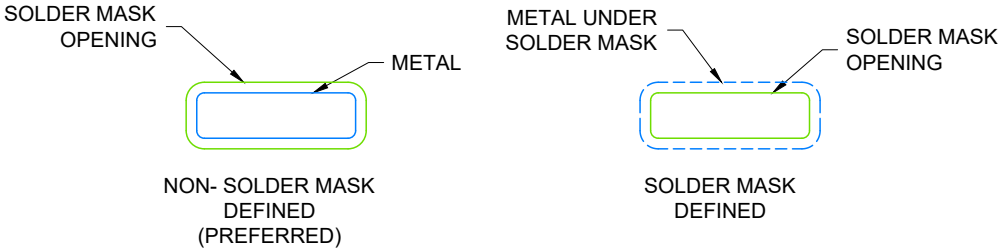

SOLDER MASK DETAILS

4224643/C 04/2024

NOTES: (continued)

6. Publication IPC-7351 may have alternate designs.
7. Solder mask tolerances between and around signal pads can vary based on board fabrication site.

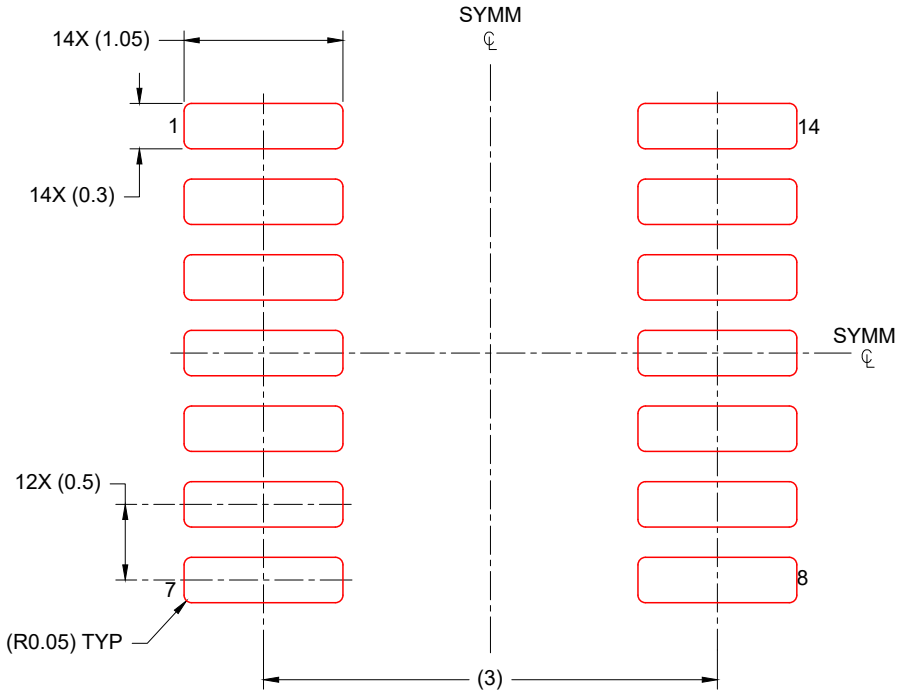

SOLDER PASTE EXAMPLE
BASED ON 0.125 mm THICK STENCIL
SCALE: 20X

4224643/C 04/2024

NOTES: (continued)

8. Laser cutting apertures with trapezoidal walls and rounded corners may offer better paste release. IPC-7525 may have alternate design recommendations.
9. Board assembly site may have different recommendations for stencil design.

IMPORTANT NOTICE AND DISCLAIMER

TI PROVIDES TECHNICAL AND RELIABILITY DATA (INCLUDING DATA SHEETS), DESIGN RESOURCES (INCLUDING REFERENCE DESIGNS), APPLICATION OR OTHER DESIGN ADVICE, WEB TOOLS, SAFETY INFORMATION, AND OTHER RESOURCES “AS IS” AND WITH ALL FAULTS, AND DISCLAIMS ALL WARRANTIES, EXPRESS AND IMPLIED, INCLUDING WITHOUT LIMITATION ANY IMPLIED WARRANTIES OF MERCHANTABILITY, FITNESS FOR A PARTICULAR PURPOSE OR NON-INFRINGEMENT OF THIRD PARTY INTELLECTUAL PROPERTY RIGHTS.

These resources are intended for skilled developers designing with TI products. You are solely responsible for (1) selecting the appropriate TI products for your application, (2) designing, validating and testing your application, and (3) ensuring your application meets applicable standards, and any other safety, security, regulatory or other requirements.

These resources are subject to change without notice. TI grants you permission to use these resources only for development of an application that uses the TI products described in the resource. Other reproduction and display of these resources is prohibited. No license is granted to any other TI intellectual property right or to any third party intellectual property right. TI disclaims responsibility for, and you will fully indemnify TI and its representatives against, any claims, damages, costs, losses, and liabilities arising out of your use of these resources.

TI’s products are provided subject to TI’s Terms of Sale or other applicable terms available either on ti.com or provided in conjunction with such TI products. TI’s provision of these resources does not expand or otherwise alter TI’s applicable warranties or warranty disclaimers for TI products.

TI objects to and rejects any additional or different terms you may have proposed.

Mailing Address: Texas Instruments, Post Office Box 655303, Dallas, Texas 75265
Copyright © 2024, Texas Instruments Incorporated