TLV906xS 10MHz, RRIO, CMOS Operational Amplifiers for Cost-Sensitive Systems

1 Features

- Rail-to-rail input and output
- Low input offset voltage: ±0.3mV
- Unity-gain bandwidth: 10MHz
- Low broadband noise: 10nV/√ Hz
- Low input bias current: 0.5pA
- Low quiescent current: 538µA
- Unity-gain stable
- Internal RFI and EMI filter
- Operational at supply voltages as low as 1.8V
- Easier to stabilize with higher capacitive load due to resistive open-loop output impedance
- Shutdown version: TLV906xS
- Extended temperature range: –40°C to 125°C

2 Applications

- E-bikes
- Smoke detectors
- HVAC: heating, ventilating, and air conditioning
- Motor control: AC induction
- Refrigerators
- Wearable devices
- Laptop computers
- Washing machines
- Sensor signal conditioning
- Power modules
- Barcode scanners
- Active Filters
- Low-side current sensing

3 Description

The TLV9061 (single), TLV9062 (dual), and TLV9064 (quad) are single-, dual-, and quad- low-voltage, 1.8V to 5.5V) operational amplifiers, op amps) with rail-to-rail input and output swing capabilities.

These devices are highly cost-effective options for applications where low-voltage operation, a small footprint, and high capacitive load drive are required.

Although the capacitive load drive of the TLV906x is 100pF, the resistive open-loop output impedance makes stabilizing with higher capacitive loads simpler. These op amps are designed specifically for low-voltage operation (1.8V to 5.5V), with performance specifications similar to the OPAx316 and TLVx316 devices.

The TLV906xS devices include a shutdown mode that allow the amplifiers to switch into standby mode with typical current consumption less than 1µA.

The TLV906xS family helps simplify system design, because the family is unity-gain stable, integrates the RFI and EMI rejection filter, and provides no phase reversal in overdrive condition.

Micro size packages, such as X2SON and X2QFN, are offered for all the channel variants (single, dual and quad), along with industry-standard packages, such as SOIC, MSOP, SOT-23, and TSSOP.

Device Information

PART NUMBER(3)	PACKAGE(1)	BODY SIZE (NOM)(4)
TLV9061	DBV (SOT-23, 5)	2.90mm × 1.60 mm
	DCK (SC70, 5)	2.00mm × 1.25 mm
	DRL (SOT-553, 5)(2)	1.60mm × 1.20 mm
	DPW (X2SON, 5)	0.80mm × 0.80mm
TLV9061S	DBV (SOT-23, 6)	2.90mm × 1.60 mm
	DRY (USON, 6)	1.45mm × 1.00 mm
TLV9062	D (SOIC, 8)	4.90mm × 3.90 mm
	PW (TSSOP, 8)	3.00mm × 4.40 mm
	DGK (VSSOP, 8)	3.00mm × 3.00 mm
	DDF (SOT-23, 8)	2.90mm × 1.60 mm
	DSG (WSON, 8)	2.00mm × 2.00 mm
TLV9062S	DGS (VSSOP, 10)	3.00mm × 3.00 mm
	RUG (X2QFN, 10)	2.00mm × 1.50mm
	YCK (DSBGA, 9)	1.00mm x 1.00mm
TLV9064	D (SOIC, 14)	8.65mm × 3.90 mm
	PW (TSSOP, 14)	5.00mm × 4.40 mm
	RTE (WQFN, 16)	3.00mm × 3.00mm
	RUC (X2QFN, 14)	2.00mm × 2.00mm
TLV9064S	RTE (WQFN, 16)	3.00mm × 3.00mm

(1) For all available packages, see Section 10.
(2) Package is preview only.
(3) See *Device Comparison*.
(4) The body size (length × width) is a nominal value and does not include pins.

An IMPORTANT NOTICE at the end of this data sheet addresses availability, warranty, changes, use in safety-critical applications, intellectual property matters and other important disclaimers. UNLESS OTHERWISE NOTED, this document contains PRODUCTION DATA.

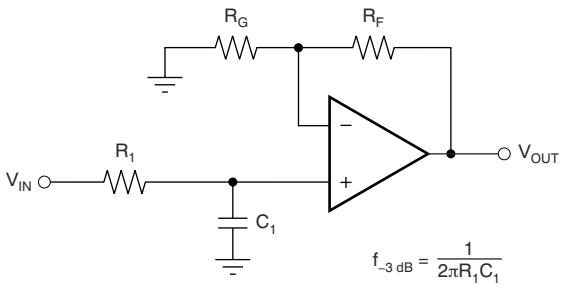

$$\frac{V_{OUT}}{V_{IN}} = \left(1 + \frac{R_F}{R_G}\right)\left(\frac{1}{1 + sR_1C_1}\right)$$

Single-Pole, Low-Pass Filter

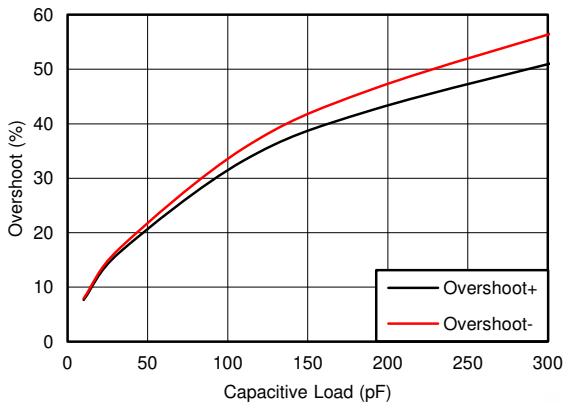

Small-Signal Overshoot vs Load Capacitance

Copyright © 2024 Texas Instruments Incorporated

Table of Contents

1 Features....1
2 Applications....1
3 Description....1
4 Pin Configuration and Functions....4
5 Specifications....9
5.1 Absolute Maximum Ratings....9
5.2 ESD Ratings....9
5.3 Recommended Operating Conditions....9
5.4 Thermal Information: TLV9061....10
5.5 Thermal Information: TLV9061S....10
5.6 Thermal Information: TLV9062....10
5.7 Thermal Information: TLV9062S....11
5.8 Thermal Information: TLV9064....11
5.9 Thermal Information: TLV9064S....11
5.10 Electrical Characteristics....12
5.11 Typical Characteristics....14
6 Detailed Description....20
6.1 Overview....20
6.2 Functional Block Diagram....20
6.3 Feature Description....21
6.4 Device Functional Modes....22
7 Application and Implementation....23
7.1 Application Information....23
7.2 Typical Applications....23
7.3 Power Supply Recommendations....24
7.4 Layout....26
8 Device and Documentation Support....28
8.1 Documentation Support....28
8.2 Receiving Notification of Documentation Updates....28
8.3 Support Resources....28
8.4 Trademarks....28
8.5 Electrostatic Discharge Caution....28
8.6 Glossary....28
9 Revision History....28
10 Mechanical, Packaging, and Orderable Information....31

Device Comparison Table

DEVICE	NO. OF CHANNELS	PACKAGE LEADS														
		SOIC D	USON DRY	SOT-23 DBV	SC-70 DCK	VSSOP DGK	VSSOP DGS	DSBGA YCK	X2SON DPW	SOT-553 DRL	WSON DSG	TSSOP PW	SOT-23 DDF	WQFN RTE	X2QFN RUC	X2QFN RUG
TLV9061	1	8	—	5	5	—	—	—	5	5	—	—	—	—	—	—
TLV9061S		—	6	6	—	—	—	—	—	—	—	—	—	—	—	—
TLV9062	2	8	—	—	—	8	10	—	—	—	8	8	8	—	—	—
TLV9062S		—	—	—	—	—	10	9	—	—	—	—	—	—	—	10
TLV9064	4	14	—	—	—	—	—	—	—	—	—	14	—	16	14	—
TLV9064S		—	—	—	—	—	—	—	—	—	—	—	—	16	—	—

Copyright © 2024 Texas Instruments Incorporated

4 Pin Configuration and Functions

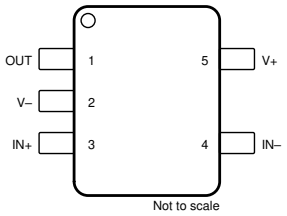

Figure 4-1. TLV9061 DBV or DRL Package, 5-Pin SOT-23 or SOT-553 (Top View)

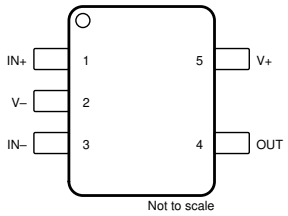

Figure 4-2. TLV9061 DCK Package, 5-Pin SC70 (Top View)

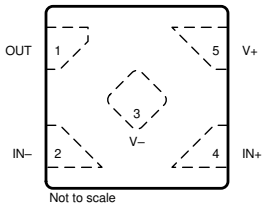

Figure 4-3. TLV9061 DPW Package, 5-Pin X2SON (Top View)

Table 4-1. Pin Functions: TLV9061

PIN				TYPE[1]	DESCRIPTION
NAME	SOT-23, SOT-553	SC70	X2SON		
IN–	4	3	2	I	Inverting input
IN+	3	1	4	I	Noninverting input
OUT	1	4	1	O	Output
V–	2	2	3	I or —	Negative (low) supply or ground (for single-supply operation)
V+	5	5	5	I	Positive (high) supply

(1) I = input, O = output

Copyright © 2024 Texas Instruments Incorporated

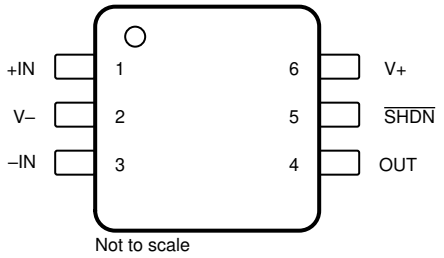

Figure 4-4. TLV9061S DBV Package, 6-Pin SOT-23 (Top View)

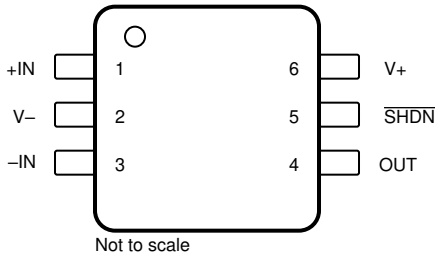

Figure 4-5. TLV9061S DRY Package, 6-Pin USON (Top View)

Table 4-2. Pin Functions: TLV9061S

PIN			TYPE(1)	DESCRIPTION
NAME	SOT-23	USON		
IN–	4	3	I	Inverting input
IN+	3	1	I	Noninverting input
OUT	1	4	O	Output
$\overline{\text{SHDN}}$	5	5	I	Shutdown: low = amp disabled, high = amp enabled. See *Shutdown Function* section for more information.
V–	2	2	I or —	Negative (low) supply or ground (for single-supply operation)
V+	6	6	I	Positive (high) supply

(1) I = input, O = output

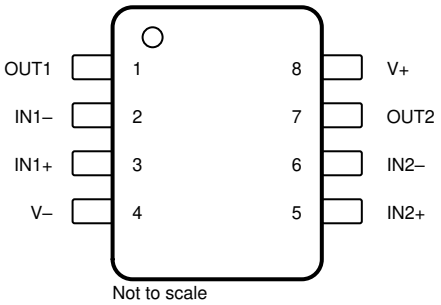

Figure 4-6. TLV9062 D, DGK, PW, or DDF Package, 8-Pin SOIC, VSSOP, TSSOP, or SOT-23 (Top View)

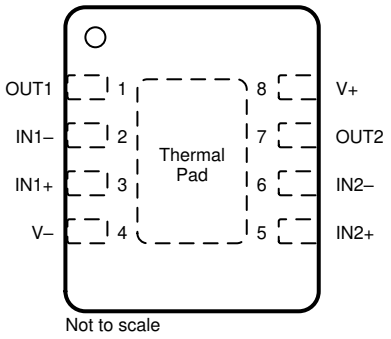

A. Connect thermal pad to V–

Figure 4-7. TLV9062 DSG Package, 8-Pin WSON With Exposed Thermal Pad (Top View)

Table 4-3. Pin Functions: TLV9062

PIN		TYPE(1)	DESCRIPTION
NAME	NO.		
IN1–	2	I	Inverting input, channel 1
IN1+	3	I	Noninverting input, channel 1
IN2–	6	I	Inverting input, channel 2
IN2+	5	I	Noninverting input, channel 2
OUT1	1	O	Output, channel 1
OUT2	7	O	Output, channel 2
V–	4	—	Negative (lowest) supply or ground (for single-supply operation)
V+	8	—	Positive (highest) supply

(1) I = input, O = output

Copyright © 2024 Texas Instruments Incorporated

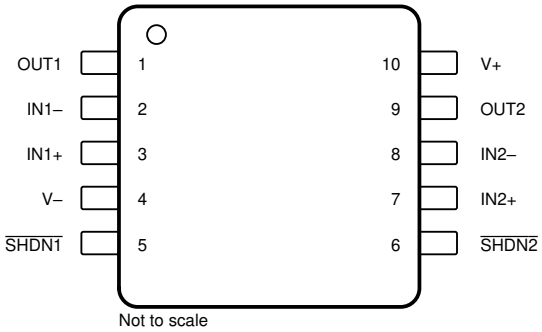

Figure 4-8. TLV9062S DGS Package, 10-Pin VSSOP (Top View)

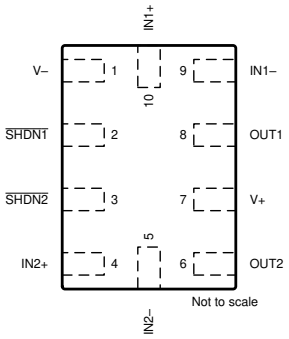

Figure 4-9. TLV9062S RUG Package, 10-Pin X2QFN (Top View)

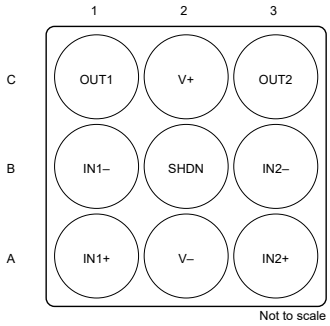

Figure 4-10. TLV9062S YCK Package 9-Pin DSBGA (WCSP) Bottom View

Table 4-4. Pin Functions: TLV9062S

PIN				I/O	DESCRIPTION
NAME	VSSOP	X2QFN	DSBGA (WCSP)		
IN1–	2	9	B1	I	Inverting input, channel 1
IN1+	3	10	A1	I	Noninverting input, channel 1
IN2–	8	5	B3	I	Inverting input, channel 2
IN2+	7	4	A3	I	Noninverting input, channel 2
OUT1	1	8	C1	O	Output, channel 1
OUT2	9	6	C3	O	Output, channel 2
$\overline{\text{SHDN1}}$	5	2	—	I	Shutdown: low = amp disabled, high = amp enabled, channel 1. See *Shutdown Function* for more information.
$\overline{\text{SHDN2}}$	6	3	—	I	Shutdown: low = amp disabled, high = amp enabled, channel 1. See *Shutdown Function* for more information.
$\overline{\text{SHDN}}$	—	—	B2		Shutdown: low = both amplifiers disabled, high = both amplifiers enabled
V–	4	1	A2	I or —	Negative (low) supply or ground (for single-supply operation)
V+	10	7	C2	I	Positive (high) supply

Copyright © 2024 Texas Instruments Incorporated

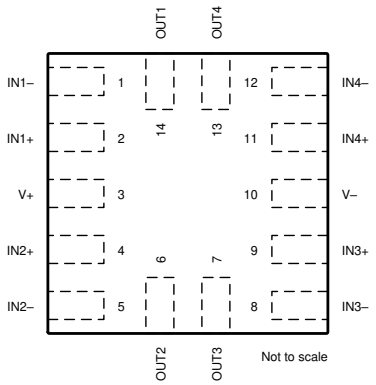

Figure 4-11. TLV9064 RUC Package, 14-Pin X2QFN (Top View)

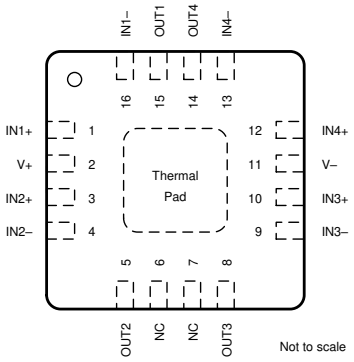

A. Connect thermal pad to V–

Figure 4-12. TLV9064 RTE Package, 16-Pin WQFN With Exposed Thermal Pad (Top View)

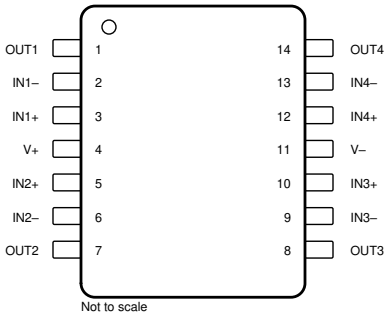

Figure 4-13. TLV9064 D or PW Package, 14-Pin SOIC or TSSOP (Top View)

Table 4-5. Pin Functions: TLV9064

PIN				TYPE[(1)]	DESCRIPTION
NAME	SOIC, TSSOP	WQFN	X2QFN		
IN1–	2	16	1	I	Inverting input, channel 1
IN1+	3	1	2	I	Noninverting input, channel 1
IN2–	6	4	5	I	Inverting input, channel 2
IN2+	5	3	4	I	Noninverting input, channel 2
IN3–	9	9	8	I	Inverting input, channel 3
IN3+	10	10	9	I	Noninverting input, channel 3
IN4–	13	13	12	I	Inverting input, channel 4
IN4+	12	12	11	I	Noninverting input, channel 4
NC	—	6, 7	—	—	No internal connection
OUT1	1	15	14	O	Output, channel 1
OUT2	7	5	6	O	Output, channel 2
OUT3	8	8	7	O	Output, channel 3
OUT4	14	14	13	O	Output, channel 4
V–	11	11	10	I or —	Negative (low) supply or ground (for single-supply operation)
V+	4	2	3	I	Positive (high) supply

(1) I = input, O = output

Copyright © 2024 Texas Instruments Incorporated

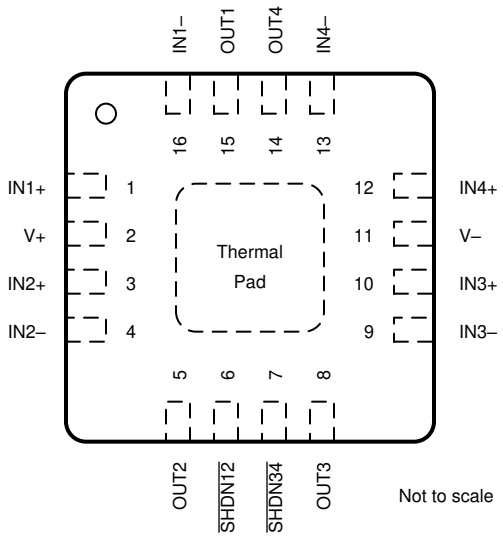

A. Connect thermal pad to V–

Figure 4-14. TLV9064S RTE Package, 16-Pin WQFN With Exposed Thermal Pad (Top View)

Table 4-6. Pin Functions: TLV9064S

PIN		TYPE(1)	DESCRIPTION
NAME	NO.		
IN1–	16	I	Inverting input, channel 1
IN1+	1	I	Noninverting input, channel 1
IN2–	4	I	Inverting input, channel 2
IN2+	3	I	Noninverting input, channel 2
IN3–	9	I	Inverting input, channel 3
IN3+	10	I	Noninverting input, channel 3
IN4–	13	I	Inverting input, channel 4
IN4+	12	I	Noninverting input, channel 4
OUT1	15	O	Output, channel 1
OUT2	5	O	Output, channel 2
OUT3	8	O	Output, channel 3
OUT4	14	O	Output, channel 4
$\overline{\text{SHDN12}}$	6	I	Shutdown: low = amp disabled, high = amp enabled. Channel 1. See *Shutdown Function* section for more information.
$\overline{\text{SHDN34}}$	7	I	Shutdown: low = amp disabled, high = amp enabled. Channel 1. See *Shutdown Function* section for more information.
V–	11	I or —	Negative (low) supply or ground (for single-supply operation)
V+	2	I	Positive (high) supply

(1) I = input, O = output

Copyright © 2024 Texas Instruments Incorporated

5 Specifications

5.1 Absolute Maximum Ratings

over operating ambient temperature (unless otherwise noted)[1]

			MIN	MAX	UNIT
Supply voltage [(V+) – (V–)]			0	6	V
Signal input pins	Voltage[2]	Common-mode	(V–) – 0.5	(V+) + 0.5	V
		Differential		(V+) – (V–) + 0.2	V
	Current[2]		–10	10	mA
Output short-circuit[3]			Continuous		mA
Temperature	Specified, T_A		–40	125	°C
	Junction, T_J			150	
	Storage, T_{stg}		–65	150	

(1) Stresses beyond those listed under *Absolute Maximum Ratings* may cause permanent damage to the device. These are stress ratings only, and functional operation of the device at these or any other conditions beyond those indicated under *Recommended Operating Conditions* is not implied. Exposure to absolute-maximum-rated conditions for extended periods may affect device reliability.
(2) Input pins are diode-clamped to the power-supply rails. Current limit input signals that can swing more than 0.5V beyond the supply rails to 10mA or less.
(3) Short-circuit to ground, one amplifier per package.

5.2 ESD Ratings

		VALUE	UNIT
TLV9061 PACKAGES			
$V_{(ESD)}$ Electrostatic discharge	Human-body model (HBM), per ANSI/ESDA/JEDEC JS-001[1]	±2500	V
	Charged-device model (CDM), per JEDEC specification JESD22-C101[2]	±1500	
ALL OTHER PACKAGES			
$V_{(ESD)}$ Electrostatic discharge	Human-body model (HBM), per ANSI/ESDA/JEDEC JS-001[1]	±4000	V
	Charged-device model (CDM), per JEDEC specification JESD22-C101[2]	±1500	

(1) JEDEC document JEP155 states that 500V HBM allows safe manufacturing with a standard ESD control process.
(2) JEDEC document JEP157 states that 250V CDM allows safe manufacturing with a standard ESD control process.

5.3 Recommended Operating Conditions

over operating ambient temperature range (unless otherwise noted)

		MIN	MAX	UNIT
V_S	Supply voltage (V_S = [V+] – [V–])	1.8	5.5	V
V_I	Input voltage range	(V–) – 0.1	(V+) + 0.1	V
V_O	Output voltage range	V–	V+	V
V_{SHDN_IH}	High level input voltage at shutdown pin (amplifier enabled)	1.1	V+	V
V_{SHDN_IL}	Low level input voltage at shutdown pin (amplifier disabled)	V–	0.2	V
T_A	Specified temperature	–40	125	°C

Copyright © 2024 Texas Instruments Incorporated

5.4 Thermal Information: TLV9061

THERMAL METRIC[1]		TLV9061			UNIT
		DBV (SOT-23)	DCK (SC70)	DPW (X2SON)	
		5 PINS	5 PINS	5 PINS	
$R_{\theta JA}$	Junction-to-ambient thermal resistance	221.7	263.3	467	°C/W
$R_{\theta JC(top)}$	Junction-to-case (top) thermal resistance	144.7	75.5	211.6	°C/W
$R_{\theta JB}$	Junction-to-board thermal resistance	49.7	51	332.2	°C/W
ψ_{JT}	Junction-to-top characterization parameter	26.1	1	29.3	°C/W
ψ_{JB}	Junction-to-board characterization parameter	49	50.3	330.6	°C/W
$R_{\theta JC(bot)}$	Junction-to-case (bottom) thermal resistance	N/A	N/A	125	°C/W

(1) For more information about traditional and new thermal metrics, see *Semiconductor and IC Package Thermal Metrics*.

5.5 Thermal Information: TLV9061S

THERMAL METRIC[1]		TLV9061S		UNIT
		DBV (SOT-23)	DRY (USON)	
		6 PINS	6 PINS	
$R_{\theta JA}$	Junction-to-ambient thermal resistance	216.5	TBD	°C/W
$R_{\theta JC(top)}$	Junction-to-case (top) thermal resistance	155.1	TBD	°C/W
$R_{\theta JB}$	Junction-to-board thermal resistance	96.2	TBD	°C/W
ψ_{JT}	Junction-to-top characterization parameter	80.3	TBD	°C/W
ψ_{JB}	Junction-to-board characterization parameter	95.9	TBD	°C/W
$R_{\theta JC(bot)}$	Junction-to-case (bottom) thermal resistance	N/A	N/A	°C/W

(1) For more information about traditional and new thermal metrics, see the *Semiconductor and IC Package Thermal Metrics*.

5.6 Thermal Information: TLV9062

THERMAL METRIC[1]		TLV9062					UNIT
		D (SOIC)	DGK (VSSOP)	DSG (WSON)	PW (TSSOP)	DDF (SOT-23)	
		8 PINS	8 PINS	8 PINS	8 PINS	8 PINS	
$R_{\theta JA}$	Junction-to-ambient thermal resistance	157.6	201.2	94.4	205.1	184.4	°C/W
$R_{\theta JC(top)}$	Junction-to-case (top) thermal resistance	104.6	85.7	116.5	93.7	112.8	°C/W
$R_{\theta JB}$	Junction-to-board thermal resistance	99.7	122.9	61.3	135.7	99.9	°C/W
ψ_{JT}	Junction-to-top characterization parameter	55.6	21.2	13	25.0	18.7	°C/W
ψ_{JB}	Junction-to-board characterization parameter	99.2	121.4	61.7	134.0	99.3	°C/W
$R_{\theta JC(bot)}$	Junction-to-case (bottom) thermal resistance	N/A	N/A	34.4	N/A	N/A	°C/W

(1) For more information about traditional and new thermal metrics, see *Semiconductor and IC Package Thermal Metrics*.

Copyright © 2024 Texas Instruments Incorporated

5.7 Thermal Information: TLV9062S

THERMAL METRIC[1]		TLV9002S			UNIT
		YCK (DSBGA)	RUG (X2QFN)	DGS (VSSOP)	
		9 PINS	10 PINS	10 PINS	
$R_{\theta JA}$	Junction-to-ambient thermal resistance	129.8	197.2	170.4	°C/W
$R_{\theta JC(top)}$	Junction-to-case (top) thermal resistance	0.9	93.3	84.9	°C/W
$R_{\theta JB}$	Junction-to-board thermal resistance	37.5	123.8	113.5	°C/W
Ψ_{JT}	Junction-to-top characterization parameter	0.5	3.7	16.4	°C/W
Ψ_{JB}	Junction-to-board characterization parameter	37.1	120.2	112.3	°C/W
$R_{\theta JC(bot)}$	Junction-to-case (bottom) thermal resistance	N/A	N/A	N/A	°C/W

(1) For more information about traditional and new thermal metrics, see the Semiconductor and IC Package Thermal Metrics application report.

5.8 Thermal Information: TLV9064

THERMAL METRIC[1]		TLV9064				UNIT
		PW (TSSOP)	D (SOIC)	RTE (WQFN)	RUC (X2QFN)	
		14 PINS	14 PINS	16 PINS	14 PINS	
$R_{\theta JA}$	Junction-to-ambient thermal resistance	135.8	106.9	65.1	205.5	°C/W
$R_{\theta JC(top)}$	Junction-to-case (top) thermal resistance	64	64	67.9	72.5	°C/W
$R_{\theta JB}$	Junction-to-board thermal resistance	79	63	40.4	150.2	°C/W
ψ_{JT}	Junction-to-top characterization parameter	15.7	25.9	5.5	3.0	°C/W
ψ_{JB}	Junction-to-board characterization parameter	78.4	62.7	40.2	149.6	°C/W
$R_{\theta JC(bot)}$	Junction-to-case (bottom) thermal resistance	N/A	N/A	23.8	N/A	°C/W

(1) For more information about traditional and new thermal metrics, see *Semiconductor and IC Package Thermal Metrics*.

5.9 Thermal Information: TLV9064S

THERMAL METRIC[1]		TLV9064S	UNIT
		RTE (WQFN)	
		16 PINS	
$R_{\theta JA}$	Junction-to-ambient thermal resistance	65.1	°C/W
$R_{\theta JC(top)}$	Junction-to-case(top) thermal resistance	67.9	°C/W
$R_{\theta JB}$	Junction-to-board thermal resistance	40.4	°C/W
ψ_{JT}	Junction-to-top characterization parameter	5.5	°C/W
ψ_{JB}	Junction-to-board characterization parameter	40.2	°C/W
$R_{\theta JC(bot)}$	Junction-to-case(bottom) thermal resistance	23.8	°C/W

(1) For more information about traditional and new thermal metrics, see *Semiconductor and IC Package Thermal Metrics*.

Copyright © 2024 Texas Instruments Incorporated

5.10 Electrical Characteristics

For V_S (Total Supply Voltage) = (V+) – (V–) = 1.8V to 5.5V at T_A = 25°C, R_L = 10 kΩ connected to V_S / 2, V_{CM} = V_S / 2, and V_{OUT} = V_S / 2 (unless otherwise noted)

PARAMETER		TEST CONDITIONS	MIN	TYP	MAX	UNIT
OFFSET VOLTAGE						
V_{OS}	Input offset voltage	V_S = 5V		±0.3	±1.6	mV
		V_S = 5V, T_A = –40°C to 125°C			±2	
dV_{OS}/dT	Drift	V_S = 5V, T_A = –40°C to 125°C		±0.53		µV/°C
PSRR	Power-supply rejection ratio	V_S = 1.8V – 5.5V, V_{CM} = (V–)		±7	±80	µV/V
	Channel separation, DC	At DC		100		dB
INPUT VOLTAGE RANGE						
V_{CM}	Common-mode voltage range	V_S = 1.8V to 5.5V	(V–) – 0.1		(V+) + 0.1	V
CMRR	Common-mode rejection ratio	V_S = 5.5V, (V–) – 0.1V < V_{CM} < (V+) – 1.4V, T_A = –40°C to 125°C	80	103		dB
		V_S = 5.5V, V_{CM} = –0.1V to 5.6V, T_A = –40°C to 125°C	57	87		
		V_S = 1.8V, (V–) – 0.1V < V_{CM} < (V+) – 1.4V, T_A = –40°C to 125°C		88		
		V_S = 1.8V, V_{CM} = –0.1V to 1.9V, T_A = –40°C to 125°C		81		
INPUT BIAS CURRENT						
I_B	Input bias current			±0.5		pA
I_{OS}	Input offset current			±0.05		pA
NOISE						
E_n	Input voltage noise (peak-to-peak)	V_S = 5V, f = 0.1Hz to 10Hz		4.77		$µV_{PP}$
e_n	Input voltage noise density	V_S = 5V, f = 10kHz		10		nV/√Hz
		V_S = 5V, f = 1kHz		16		
i_n	Input current noise density	f = 1kHz		23		fA/√Hz
INPUT CAPACITANCE						
C_{ID}	Differential			2		pF
C_{IC}	Common-mode			4		pF
OPEN-LOOP GAIN						
A_{OL}	Open-loop voltage gain	V_S = 1.8V, (V–) + 0.04V < V_O < (V+) – 0.04V, R_L = 10kΩ		100		dB
		V_S = 5.5V, (V–) + 0.05V < V_O < (V+) – 0.05V, R_L = 10kΩ	104	130		
		V_S = 1.8V, (V–) + 0.06V < V_O < (V+) – 0.06V, R_L = 2kΩ		100		
		V_S = 5.5V, (V–) + 0.15V < V_O < (V+) – 0.15V, R_L = 2kΩ		130		
FREQUENCY RESPONSE						
GBP	Gain bandwidth product	V_S = 5V, G = +1		10		MHz
φ_m	Phase margin	V_S = 5V, G = +1		55		°
SR	Slew rate	V_S = 5V, G = +1		6.5		V/µs
t_S	Settling time	To 0.1%, V_S = 5V, 2V step , G = +1, C_L = 100pF		0.5		µs
		To 0.01%, V_S = 5V, 2V step, G = +1, C_L = 100pF		1		
t_{OR}	Overload recovery time	V_S = 5V, V_{IN} × gain > V_S		0.2		µs
THD + N	Total harmonic distortion + noise[(1)]	V_S = 5.5V, V_{CM} = 2.5V, V_O = 1V_{RMS}, G = +1, f = 1kHz		0.0008%		
OUTPUT						
V_O	Voltage output swing from supply rails	V_S = 5.5V, R_L = 10kΩ			20	mV
		V_S = 5.5V, R_L = 2kΩ			60	
I_{SC}	Short-circuit current	V_S = 5V		±50		mA

Copyright © 2024 Texas Instruments Incorporated

5.10 Electrical Characteristics (continued)

For V_S (Total Supply Voltage) = (V+) – (V–) = 1.8V to 5.5V at T_A = 25°C, R_L = 10 kΩ connected to V_S / 2, V_{CM} = V_S / 2, and V_{OUT} = V_S / 2 (unless otherwise noted)

PARAMETER		TEST CONDITIONS	MIN	TYP	MAX	UNIT
Z_O	Open-loop output impedance	V_S = 5V, f = 10MHz		100		Ω
POWER SUPPLY						
I_Q	Quiescent current per amplifier	V_S = 5.5V, I_O = 0mA		538	750	µA
		V_S = 5.5V, I_O = 0mA, T_A = –40°C to 125°C			800	
SHUTDOWN						
I_{QSD}	Quiescent current per amplifier	V_S = 1.8V to 5.5V, all amplifiers disabled, $\overline{SHDN}$ = Low		0.5	1.5	µA
Z_{SHDN}	Output impedance during shutdown	V_S = 1.8V to 5.5V, amplifier disabled		10 || 8		GΩ || pF
$V_{SHDN_THR_HI}$	High level voltage shutdown threshold (amplifier enabled)	V_S = 1.8V to 5.5V		(V–) + 0.9V	(V–) + 1.1V	V
$V_{SDHN_THR_LO}$	Low level voltage shutdown threshold (amplifier disabled)	V_S = 1.8V to 5.5V	(V–) + 0.2V	(V–) + 0.7V		V
t_{ON}	Amplifier enable time (shutdown) (2)	V_S = 1.8V to 5.5V, full shutdown; G = 1, V_{OUT} = 0.9 × V_S / 2, R_L connected to V–		10		µs
t_{OFF}	Amplifier disable time(2)	V_S = 1.8V to 5.5V, G = 1, V_{OUT} = 0.1 × V_S / 2, R_L connected to V–		0.6		µs
	$\overline{SHDN}$ pin input bias current (per pin)	V_S = 1.8V to 5.5V, V+ ≥ $\overline{SHDN}$ ≥ (V+) – 0.8V		130		pA
		V_S = 1.8V to 5.5V, V– ≤ $\overline{SHDN}$ ≤ V– + 0.8V		40		

(1) Third-order filter; bandwidth = 80kHz at –3dB.
(2) Disable time (t_{OFF}) and enable time (t_{ON}) are defined as the time interval between the 50% point of the signal applied to the $\overline{SHDN}$ pin and the point at which the output voltage reaches the 10% (disable) or 90% (enable) level.

5.11 Typical Characteristics

at T_A = 25°C, V_S = 5.5V, R_L = 10kΩ connected to V_S / 2, V_{CM} = V_S / 2, and V_{OUT} = V_S / 2 (unless otherwise noted)

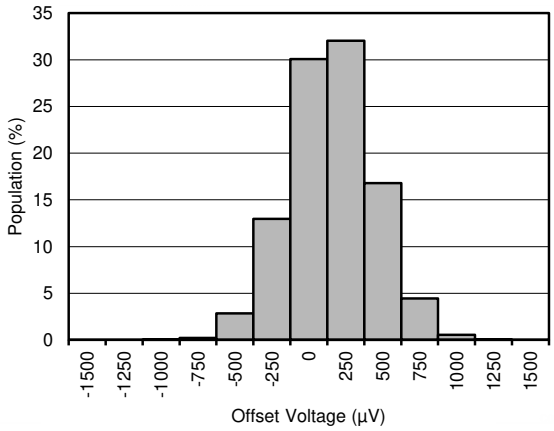

Figure 5-1. Offset Voltage Production Distribution

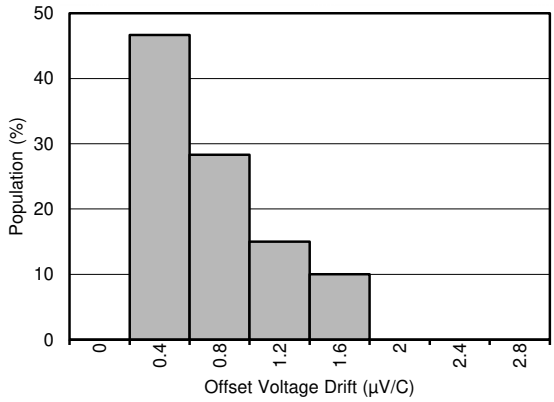

T_A = –40°C to 125°C

Figure 5-2. Offset Voltage Drift Distribution

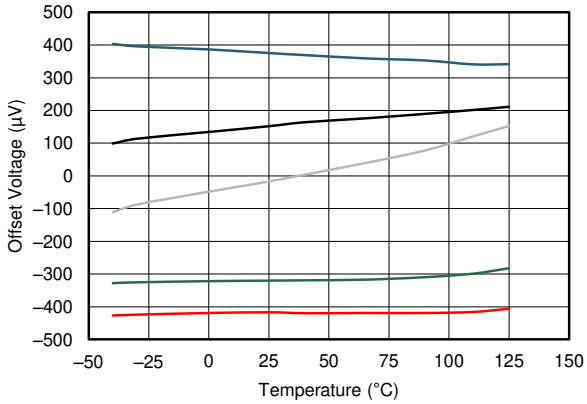

Figure 5-3. Offset Voltage vs Temperature

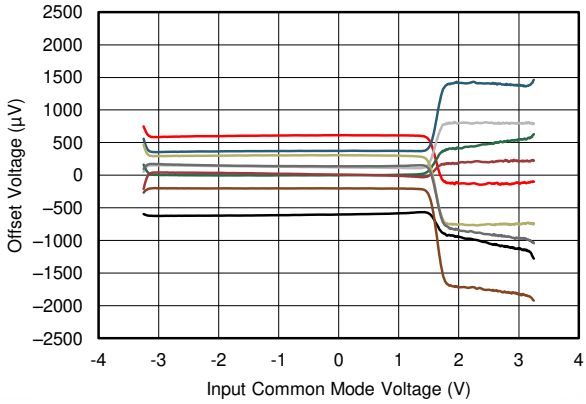

V+ = 2.75V V– = –2.75V

Figure 5-4. Offset Voltage vs Common-Mode Voltage

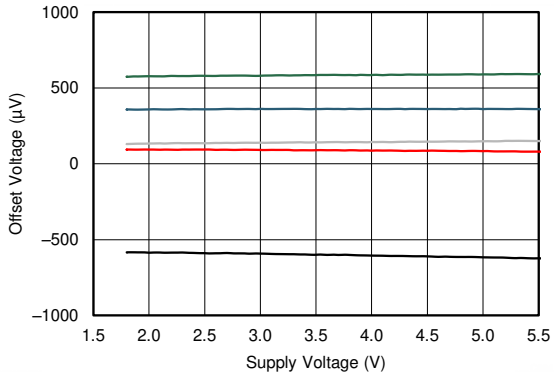

V_S = 1.8V to 5.5V

Figure 5-5. Offset Voltage vs Power Supply

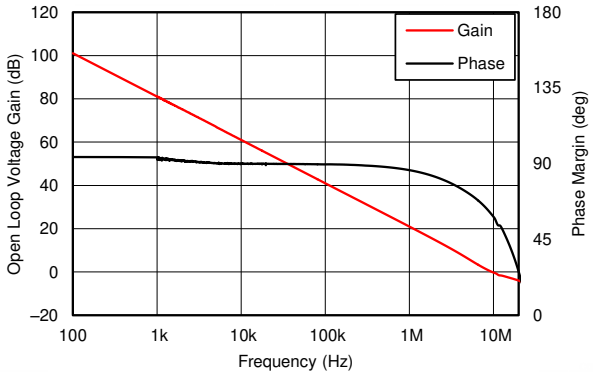

C_L = 10pF

Figure 5-6. Open-Loop Gain and Phase vs Frequency

Copyright © 2024 Texas Instruments Incorporated

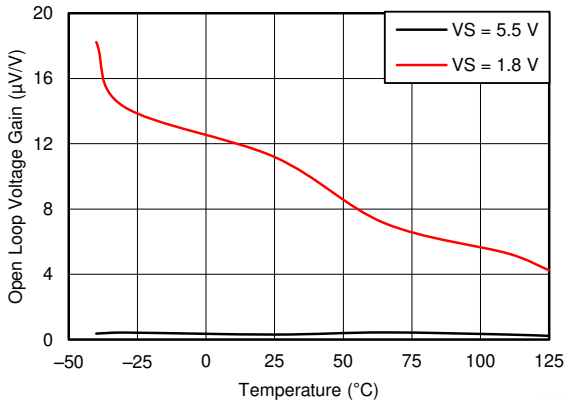

R_L = 2kΩ

Figure 5-7. Open-Loop Gain vs Temperature

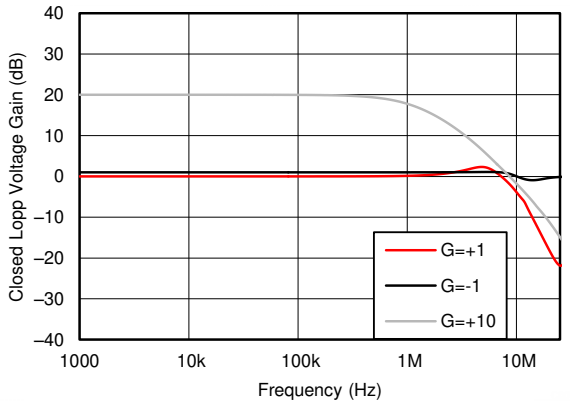

Figure 5-8. Closed-Loop Gain vs Frequency

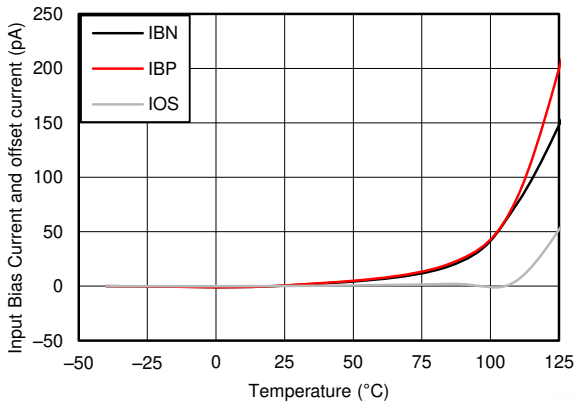

Figure 5-9. Input Bias Current vs Temperature

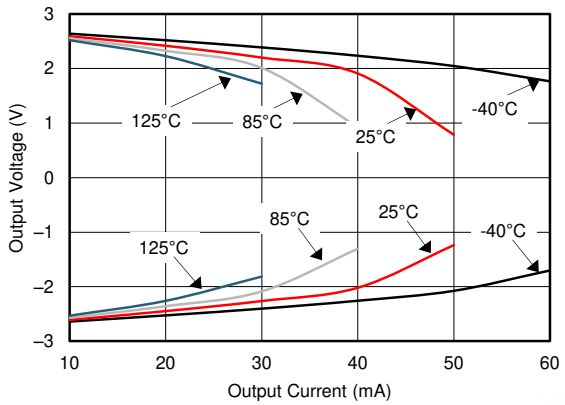

V+ = 2.75V V– = –2.75V

Figure 5-10. Output Voltage Swing vs Output Current

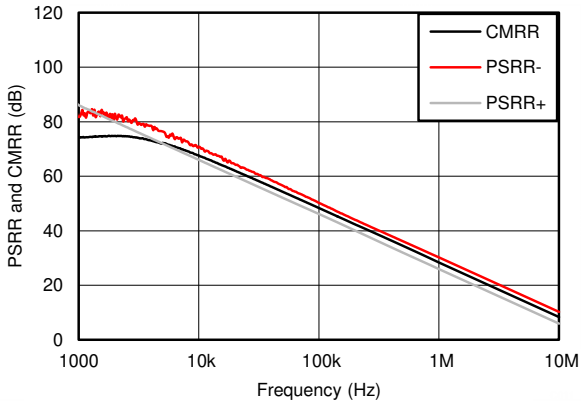

Figure 5-11. CMRR and PSRR vs Frequency (Referred to Input)

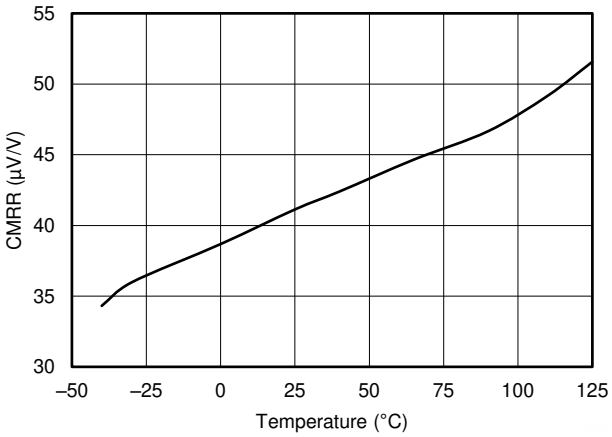

V_S = 5.5V V_{CM} = –0.1V to 5.6V T_A= –40°C to 125°C
R_L= 10kΩ

Figure 5-12. CMRR vs Temperature

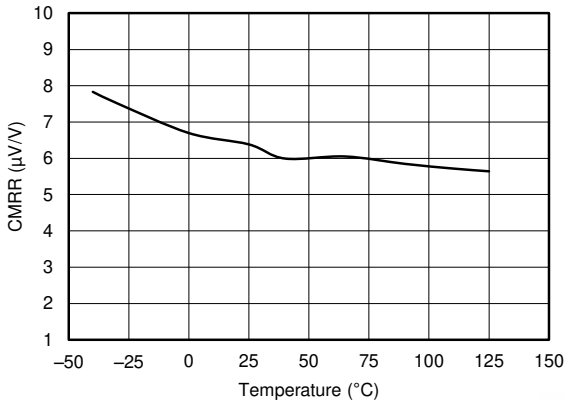

V_{CM} = (V–) – 0.1V to (V+) – 1.4V
T_A= –40°C to 125°C R_L= 10kΩ V_S = 5.5V

Figure 5-13. CMRR vs Temperature

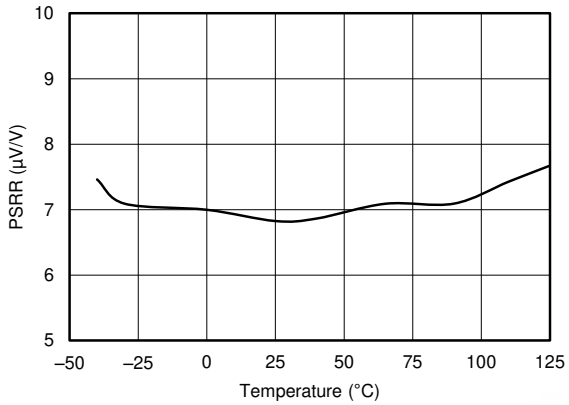

V_S = 1.8V to 5.5V

Figure 5-14. PSRR vs Temperature

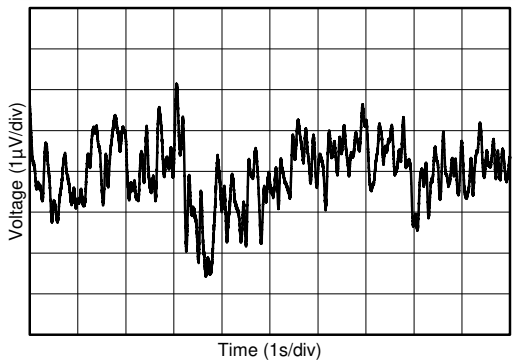

V_S = 1.8V to 5.5V

Figure 5-15. 0.1Hz to 10Hz Input Voltage Noise

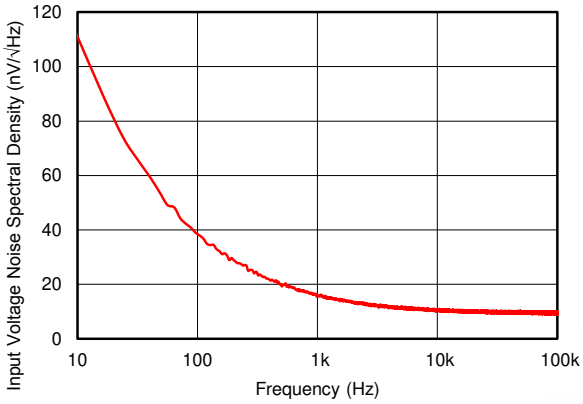

Figure 5-16. Input Voltage Noise Spectral Density vs Frequency

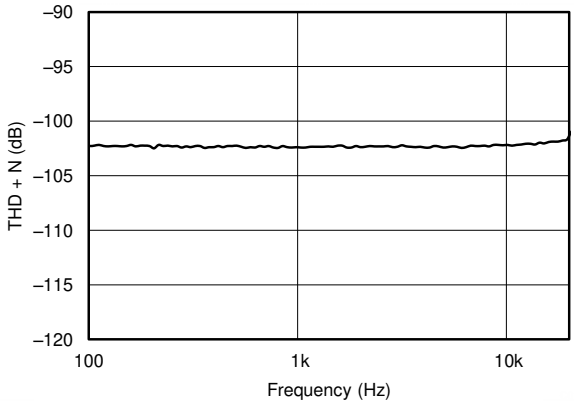

V_S = 5.5V V_{CM} = 2.5V R_L = 2kΩ
V_{OUT} = 0.5V_{RMS} BW = 80kHz G = +1

Figure 5-17. THD + N vs Frequency

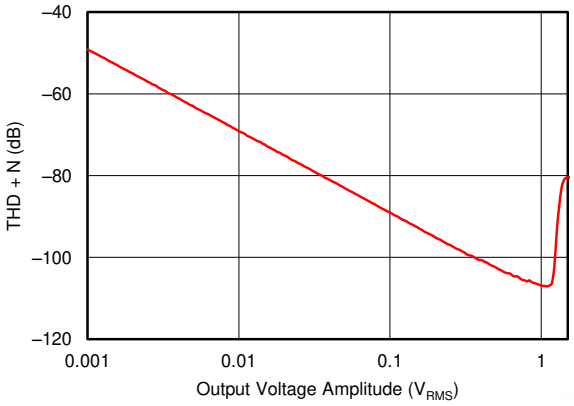

V_S = 5.5V R_L = 2kΩ G = +1
V_{CM} = 2.5V BW = 80kHz f = 1kHz

Figure 5-18. THD + N vs Amplitude

Copyright © 2024 Texas Instruments Incorporated

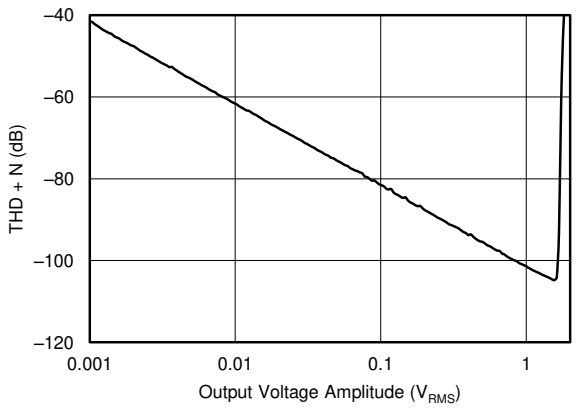

V_S = 5.5V V_{CM} = 2.5V R_L = 2kΩ
G = –1 BW = 80kHz f = 1kHz

Figure 5-19. THD + N vs Amplitude

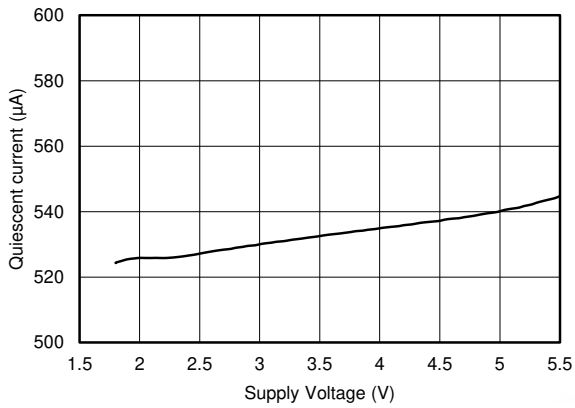

Figure 5-20. Quiescent Current vs Supply Voltage

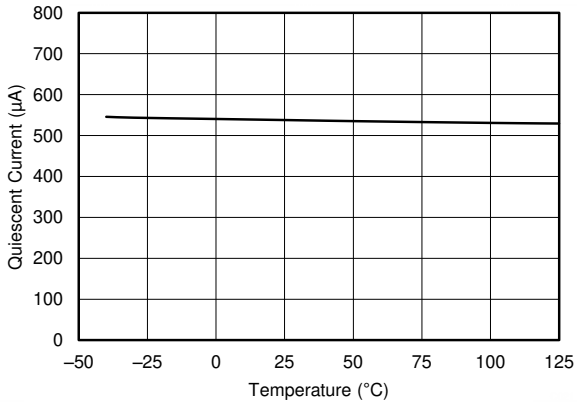

Figure 5-21. Quiescent Current vs Temperature

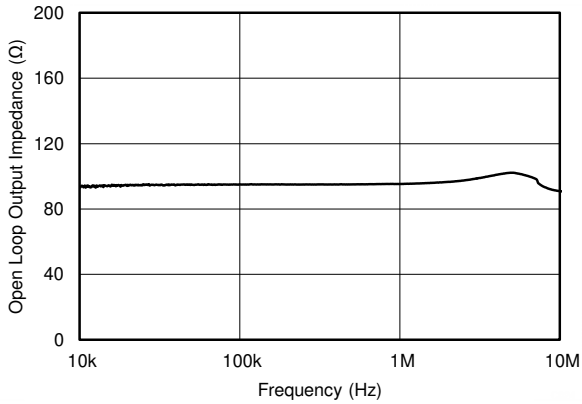

Figure 5-22. Open-Loop Output Impedance vs Frequency

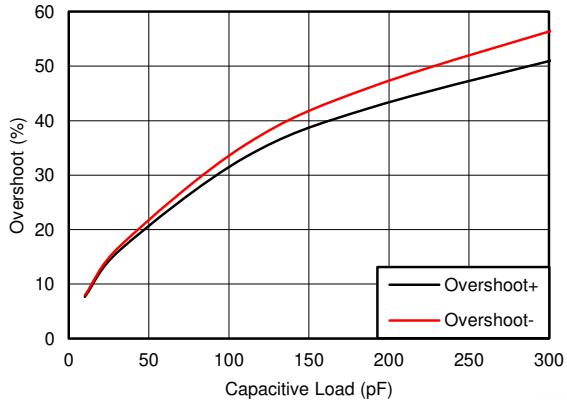

V+ = 2.75V V– = –2.75V G = +1V/V
V_{OUT} step = 100mV_{p-p} R_L = 10kΩ

Figure 5-23. Small-Signal Overshoot vs Load Capacitance

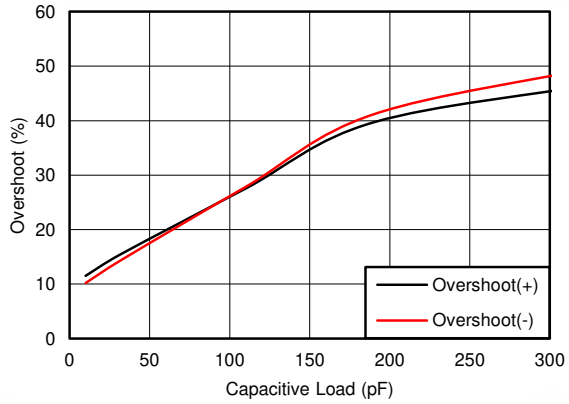

V+ = 2.75V V– = –2.75V G = –1V/V
V_{OUT} step = 100mV_{p-p} R_L = 10kΩ

Figure 5-24. Small-Signal Overshoot vs Load Capacitance

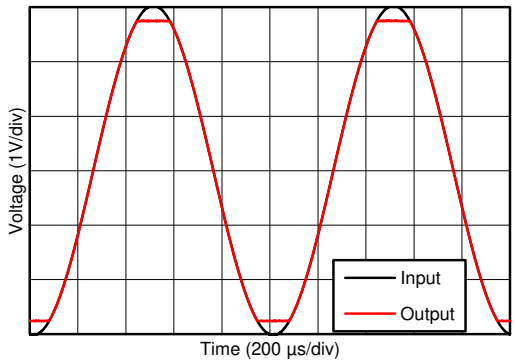

V+ = 2.75V V– = –2.75V

Figure 5-25. No Phase Reversal

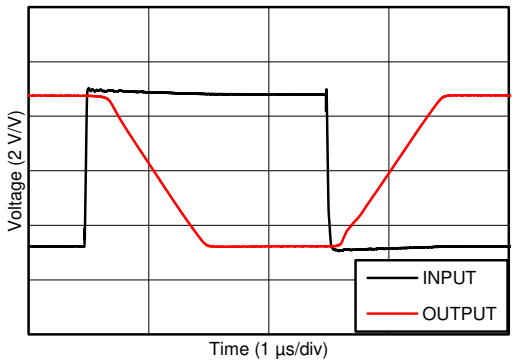

V+ = 2.75V V– = –2.75V G = –10V/V

Figure 5-26. Overload Recovery

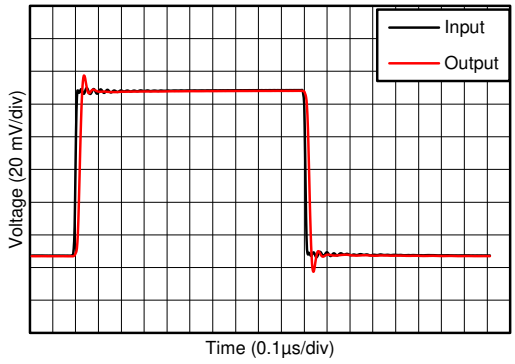

V+ = 2.75V V– = –2.75V G = 1V/V

Figure 5-27. Small-Signal Step Response

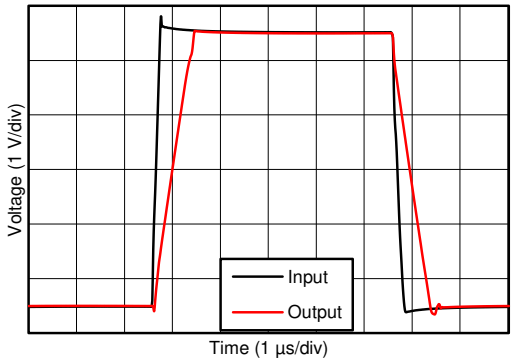

V+ = 2.75V V– = –2.75V C_L = 100pF
G = 1V/V

Figure 5-28. Large-Signal Step Response

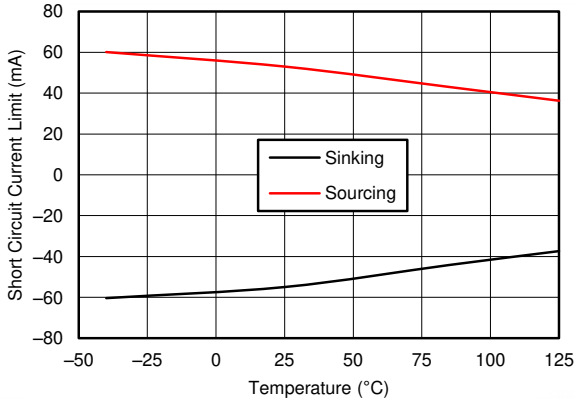

Figure 5-29. Short-Circuit Current vs Temperature

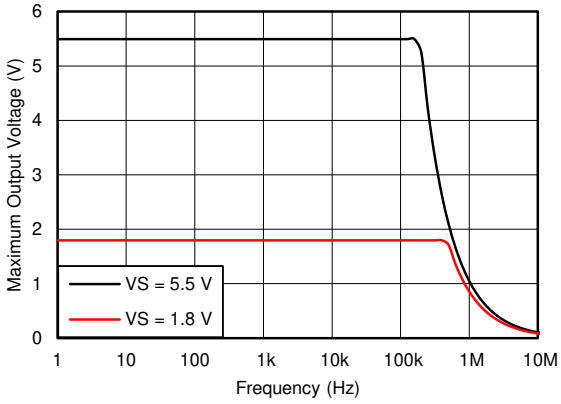

R_L = 10 kΩ C_L = 10pF

Figure 5-30. Maximum Output Voltage vs Frequency and Supply Voltage

Copyright © 2024 Texas Instruments Incorporated

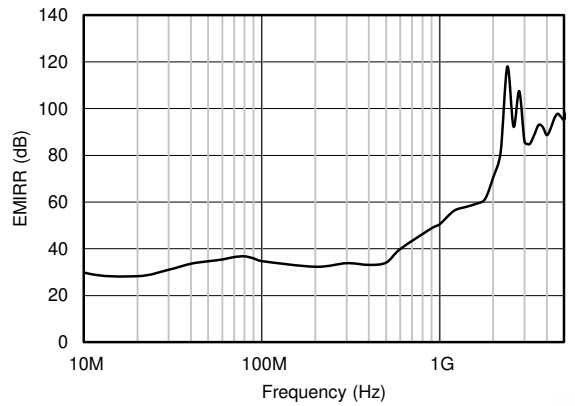

P_{RF} = –10dBm

Figure 5-31. Electromagnetic Interference Rejection Ratio Referred to Noninverting Input (EMIRR+) vs Frequency

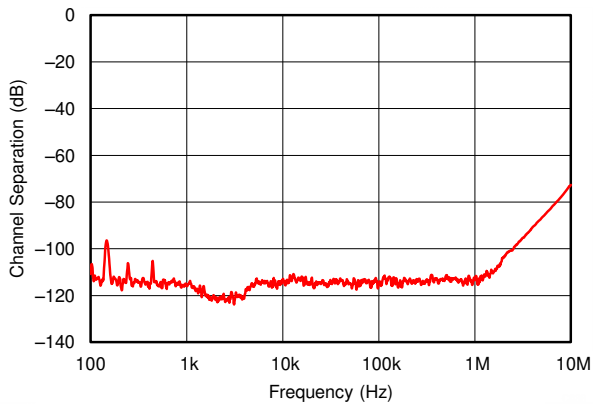

V+ = 2.75V V– = –2.75V

Figure 5-32. Channel Separation vs Frequency

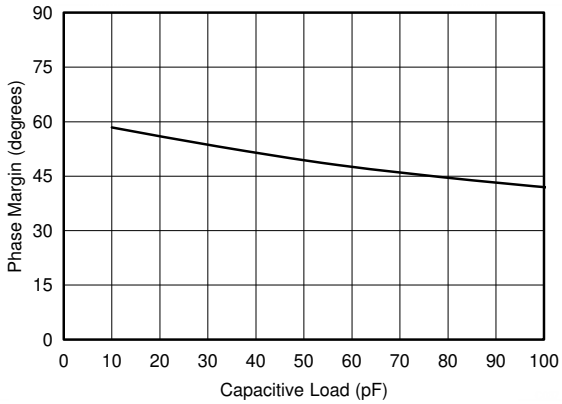

V_S = 5.5V

Figure 5-33. Phase Margin vs Capacitive Load

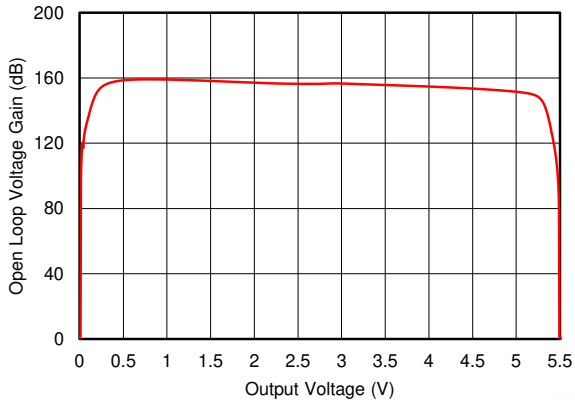

V_S = 5.5V

Figure 5-34. Open Loop Voltage Gain vs Output Voltage

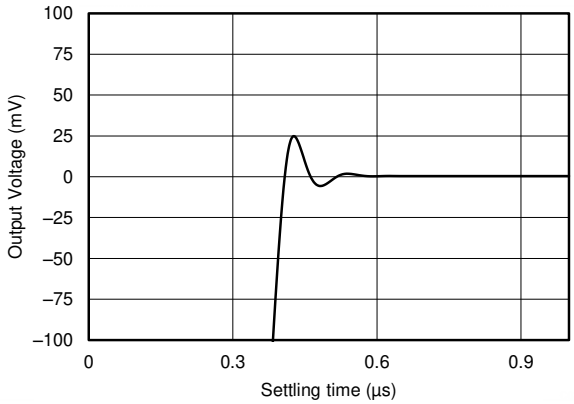

Figure 5-35. Large Signal Settling Time (Positive)

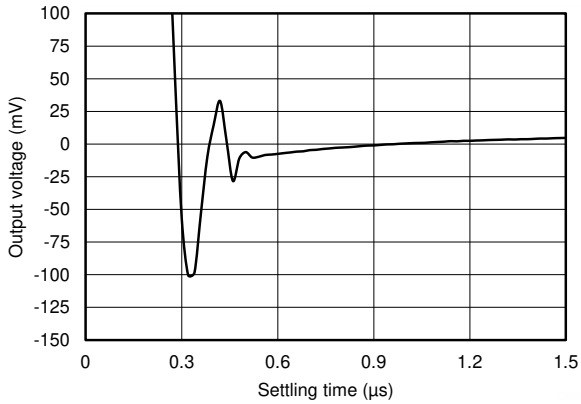

Figure 5-36. Large Signal Settling Time (Negative)

6 Detailed Description

6.1 Overview

The TLV906x devices are a family of low-power, rail-to-rail input and output op amps. These devices operate from 1.8V to 5.5V, are unity-gain stable, and are designed for a wide range of general-purpose applications. The input common-mode voltage range includes both rails and allows the TLV906x series to be used in virtually any single-supply application. Rail-to-rail input and output swing significantly increases dynamic range, especially in low-supply applications. The high bandwidth enables this family to drive the sample-hold circuitry of analog-to-digital converters (ADCs).

6.2 Functional Block Diagram

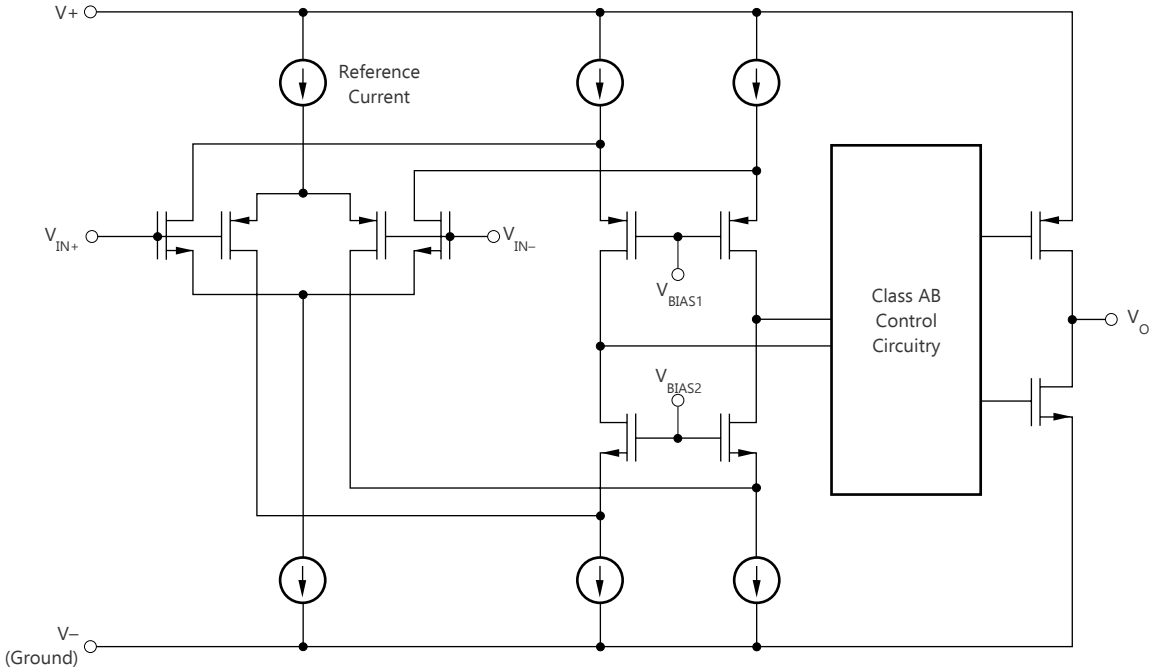

Copyright © 2024 Texas Instruments Incorporated

6.3 Feature Description

6.3.1 Rail-to-Rail Input

The input common-mode voltage range of the TLV906x family extends 100mV beyond the supply rails for the full supply voltage range of 1.8V to 5.5V. This performance is achieved with a complementary input stage: an N-channel input differential pair in parallel with a P-channel differential pair, as shown in the *Functional Block Diagram*. The N-channel pair is active for input voltages close to the positive rail, typically (V+) – 1.4V to 200mV above the positive supply, whereas the P-channel pair is active for inputs from 200mV below the negative supply to approximately (V+) – 1.4V. There is a small transition region, typically (V+) – 1.2V to (V+) – 1V, in which both pairs are on. This 200-mV transition region can vary up to 200mV with process variation. Thus, the transition region (with both stages on) can range from (V+) – 1.4V to (V+) – 1.2V on the low end, and up to (V+) – 1V to (V+) – 0.8V on the high end. Within this transition region, PSRR, CMRR, offset voltage, offset drift, and THD can degrade compared to device operation outside this region.

6.3.2 Rail-to-Rail Output

Designed as a low-power, low-voltage operational amplifier, the TLV906x series delivers a robust output drive capability. A class AB output stage with common-source transistors achieves full rail-to-rail output swing capability. For resistive loads of 10kΩ, the output swings to within 15mV of either supply rail, regardless of the applied power-supply voltage. Different load conditions change the ability of the amplifier to swing close to the rails.

6.3.3 EMI Rejection

The TLV906x uses integrated electromagnetic interference (EMI) filtering to reduce the effects of EMI from sources such as wireless communications and densely-populated boards with a mix of analog signal chain and digital components. EMI immunity can be improved with circuit design techniques; the TLV906x benefits from these design improvements. Texas Instruments has developed the ability to accurately measure and quantify the immunity of an operational amplifier over a broad frequency spectrum extending from 10MHz to 6GHz. Figure 6-1 shows the results of this testing on the TLV906x. Table 6-1 lists the EMIRR IN+ values for the TLV906x at particular frequencies commonly encountered in real-world applications. See *EMI Rejection Ratio of Operational Amplifiers* application note for more information.

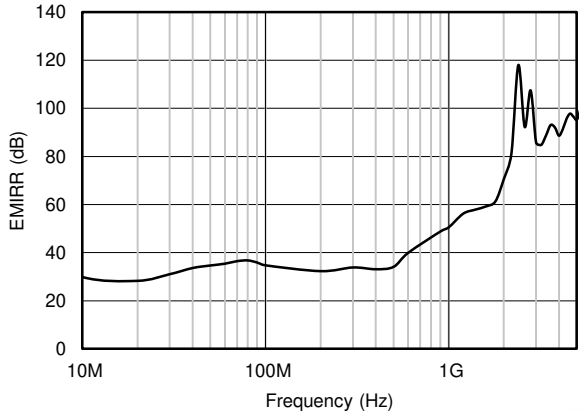

Figure 6-1. EMIRR Testing

Table 6-1. TLV906x EMIRR IN+ For Frequencies of Interest

FREQUENCY	APPLICATION or ALLOCATION	EMIRR IN+
400MHz	Mobile radio, mobile satellite, space operation, weather, radar, ultra-high frequency (UHF) applications	59.5dB
900MHz	Global system for mobile communications (GSM) applications, radio communication, navigation, GPS (to 1.6GHz), GSM, aeronautical mobile, UHF applications	68.9dB
1.8 GHz	GSM applications, mobile personal communications, broadband, satellite, L-band (1GHz to 2GHz)	77.8dB
2.4GHz	802.11b, 802.11g, 802.11n, Bluetooth®, mobile personal communications, industrial, scientific and medical (ISM) radio band, amateur radio and satellite, S-band (2GHz to 4GHz)	78.0dB

Copyright © 2024 Texas Instruments Incorporated

Table 6-1. TLV906x EMIRR IN+ For Frequencies of Interest (continued)

FREQUENCY	APPLICATION or ALLOCATION	EMIRR IN+
3.6GHz	Radiolocation, aero communication and navigation, satellite, mobile, S-band	88.8dB
5GHz	802.11a, 802.11n, aero communication and navigation, mobile communication, space and satellite operation, C-band (4GHz to 8GHz)	87.6dB

6.3.4 Overload Recovery

Overload recovery is defined as the time required for the operational amplifier output to recover from a saturated state to a linear state. The output devices of the operational amplifier enter a saturation region when the output voltage exceeds the rated operating voltage, because of the high input voltage or the high gain. After the device enters the saturation region, the charge carriers in the output devices require time to return to the linear state. After the charge carriers return to the linear state, the device begins to slew at the specified slew rate. Therefore, the propagation delay (in case of an overload condition) is the sum of the overload recovery time and the slew time. The overload recovery time for the TLV906x family is approximately 200ns.

6.3.5 Shutdown Function

The TLV906xS devices feature $\overline{\text{SHDN}}$ pins that disable the op amp, placing the op amp into a low-power standby mode. In this mode, the op amp typically consumes less than 1µA. The $\overline{\text{SHDN}}$ pins are active-low, meaning that shutdown mode is enabled when the input to the $\overline{\text{SHDN}}$ pin is a valid logic low.

The $\overline{\text{SHDN}}$ pins are referenced to the negative supply voltage of the op amp. The threshold of the shutdown feature lies around 800mV (typical) and does not change with respect to the supply voltage. Hysteresis has been included in the switching threshold to ensure smooth switching characteristics. To ensure optimal shutdown behavior, the $\overline{\text{SHDN}}$ pins should be driven with valid logic signals. A valid logic low is defined as a voltage between V– and V– + 0.2V. A valid logic high is defined as a voltage between V– + 1.2V and V+. The shutdown pin must either be connected to a valid high or a low voltage or driven, and not left as an open circuit. There is ***no*** internal pull-up to enable the amplifier.

The $\overline{\text{SHDN}}$ pins are high-impedance CMOS inputs. Dual op amp versions are independently controlled, and quad op amp versions are controlled in pairs with logic inputs. For battery-operated applications, this feature may be used to greatly reduce the average current and extend battery life. The enable time is 10µs for full shutdown of all channels; disable time is 6µs. When disabled, the output assumes a high-impedance state. This architecture allows the TLV906xS to operate as a gated amplifier (or to have the device output multiplexed onto a common analog output bus). Shutdown time (t_{OFF}) depends on loading conditions and increases as load resistance increases. To ensure shutdown (disable) within a specific shutdown time, the specified 10kΩ load to midsupply (V_S / 2) is required. If using the TLV906xS without a load, the resulting turnoff time is significantly increased.

6.4 Device Functional Modes

The TLV906x family are operational when the power-supply voltage is between 1.8V (±0.9V) and 5.5V (±2.75V). The TLV906xS devices feature a shutdown mode and are shut down when a valid logic low is applied to the shutdown pin.

Copyright © 2024 Texas Instruments Incorporated

7 Application and Implementation

Note

Information in the following applications sections is not part of the TI component specification, and TI does not warrant its accuracy or completeness. TI's customers are responsible for determining suitability of components for their purposes, as well as validating and testing their design implementation to confirm system functionality.

7.1 Application Information

The TLV906x family features 10MHz bandwidth and 6.5V/µs slew rate with only 538µA of supply current per channel, providing good AC-performance at very low power consumption. DC applications are well served with a very low input noise voltage of 10nV/√ Hz at 10kHz, low input bias current, and a typical input offset voltage of 0.3mV.

7.2 Typical Applications

7.2.1 Typical Low-Side Current Sense Application

Figure 7-1 shows the TLV906x configured in a low-side current-sensing application.

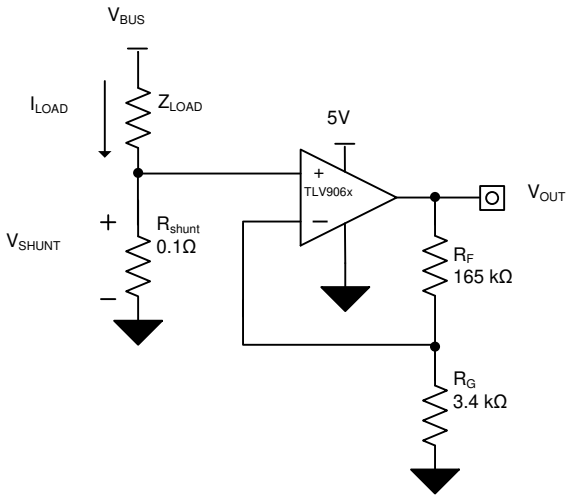

Figure 7-1. TLV906x in a Low-Side, Current-Sensing Application

7.2.2 Design Requirements

The design requirements for this design are:

- Load current: 0A to 1A
- Output voltage: 4.95V
- Maximum shunt voltage: 100mV

7.2.3 Detailed Design Procedure

The transfer function of the circuit in Figure 7-1 is given in Equation 1.

$$V_{OUT} = I_{LOAD} \times R_{SHUNT} \times GAIN \tag{1}$$

The load current (I_{LOAD}) produces a voltage drop across the shunt resistor (R_{SHUNT}). The load current is set from 0A to 1A. To keep the shunt voltage below 100mV at maximum load current, the largest shunt resistor is defined using Equation 2.

$$R_{SHUNT} = \frac{V_{SHUNT_MAX}}{I_{LOAD_MAX}} = \frac{100mV}{1A} = 100m\Omega \tag{2}$$

Using Equation 2, R_{SHUNT} equals 100mΩ. The voltage drop produced by I_{LOAD} and R_{SHUNT} is amplified by the TLV906x to produce an output voltage of approximately 0V to 4.95V. Equation 3 calculates the gain required for the TLV906x to produce the required output voltage.

$$Gain = \frac{(V_{OUT_MAX} - V_{OUT_MIN})}{(V_{IN_MAX} - V_{IN_MIN})} \tag{3}$$

Using Equation 3, the required gain equals 49.5V/V, which is set with the R_F and R_G resistors. Equation 4 sizes the R_F and R_G, resistors to set the gain of the TLV906x to 49.5V/V.

$$Gain = 1 + \frac{(R_F)}{(R_G)} \tag{4}$$

Selecting R_F to equal 165kΩ and R_G to equal 3.4kΩ provides a combination that equals approximately 49.5V/V. Figure 7-2 shows the measured transfer function of the circuit shown in Figure 7-1. Notice that the gain is only a function of the feedback and gain resistors. This gain is adjusted by varying the ratio of the resistors and the actual resistor values are determined by the impedance levels that the designer wants to establish. The impedance level determines the current drain, the effect that stray capacitance has, and a few other behaviors. There is no optimal impedance selection that works for every system, you must choose an impedance that is ideal for your system parameters.

7.2.4 Application Curve

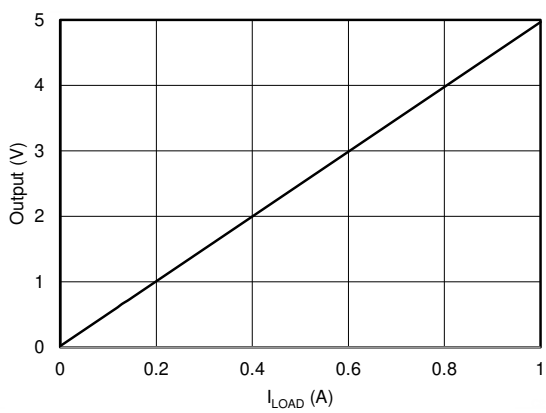

Figure 7-2. Low-Side, Current-Sense, Transfer Function

7.3 Power Supply Recommendations

The TLV906x series is specified for operation from 1.8V to 5.5V (±0.9V to ±2.75V); many specifications apply from –40°C to 125°C. The *Typical Characteristics* section presents parameters that can exhibit significant variance with regard to operating voltage or temperature.

Copyright © 2024 Texas Instruments Incorporated

CAUTION

Supply voltages larger than 6V can permanently damage the device; see the *Absolute Maximum Ratings* table.

Place 0.1µF bypass capacitors close to the power-supply pins to reduce errors coupling in from noisy or high-impedance power supplies. For more detailed information on bypass capacitor placement, see the *Layout* section.

7.3.1 Input and ESD Protection

The TLV906x series incorporates internal ESD protection circuits on all pins. For input and output pins, this protection primarily consists of current-steering diodes connected between the input and power-supply pins. These ESD protection diodes provide in-circuit, input overdrive protection, as long as the current is limited to 10mA, as shown in the *Absolute Maximum Ratings* table. Figure 7-3 shows how a series input resistor can be added to the driven input to limit the input current. The added resistor contributes thermal noise at the amplifier input and the value must be kept to a minimum in noise-sensitive applications.

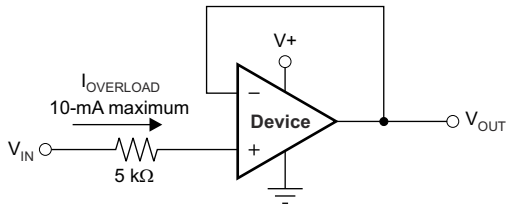

Figure 7-3. Input Current Protection

7.4 Layout

7.4.1 Layout Guidelines

For best operational performance of the device, use good printed circuit board (PCB) layout practices, including:

- Noise can propagate into analog circuitry through the power pins of the circuit as a whole and of the op amp itself. Bypass capacitors are used to reduce the coupled noise by providing low-impedance power sources local to the analog circuitry.
  - Connect low-ESR, 0.1µF ceramic bypass capacitors between each supply pin and ground, placed as close to the device as possible. A single bypass capacitor from V+ to ground is adequate for single-supply applications.
- Separate grounding for analog and digital portions of circuitry is one of the simplest and most-effective methods of noise suppression. One or more layers on multilayer PCBs are usually devoted to ground planes. A ground plane helps distribute heat and reduces electromagnetic interference (EMI) noise pickup. Take care to physically separate digital and analog grounds, paying attention to the flow of the ground current. For more detailed information, see *Circuit Board Layout Techniques*.
- To reduce parasitic coupling, run the input traces as far away from the supply or output traces as possible. If these traces cannot be kept separate, crossing the sensitive trace at a 90 degree angle is much better as opposed to running the traces in parallel with the noisy trace.
- Place the external components as close to the device as possible. As illustrated in Figure 7-5, keeping R_F and R_G close to the inverting input minimizes parasitic capacitance on the inverting input.
- Keep the length of input traces as short as possible. Always remember that the input traces are the most sensitive part of the circuit.
- Consider a driven, low-impedance guard ring around the critical traces. A guard ring can significantly reduce leakage currents from nearby traces that are at different potentials.
- Cleaning the PCB following board assembly is recommended for best performance.
- Any precision integrated circuit can experience performance shifts resulting from moisture ingress into the plastic package. Following any aqueous PCB cleaning process, baking the PCB assembly is recommended to remove moisture introduced into the device packaging during the cleaning process. A low-temperature, post-cleaning bake at 85°C for 30 minutes is sufficient for most circumstances.

Copyright © 2024 Texas Instruments Incorporated

7.4.2 Layout Example

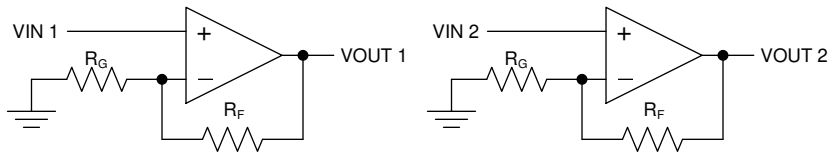

Figure 7-4. Schematic Representation for the Layout Example

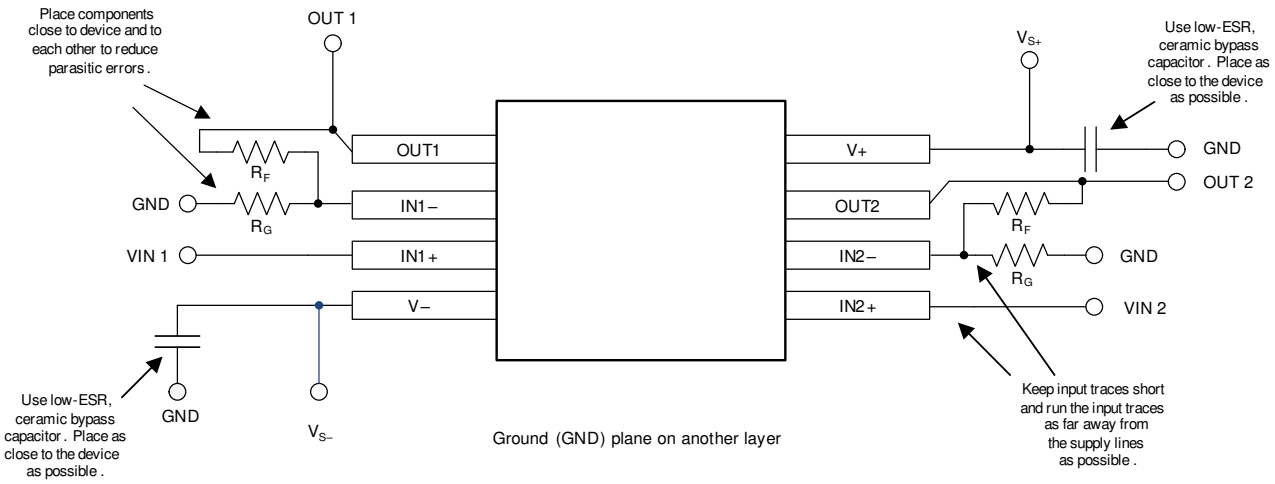

Figure 7-5. Layout Example

8 Device and Documentation Support

8.1 Documentation Support

8.1.1 Related Documentation

For related documentation, see the following:

- Texas Instruments, *Circuit Board Layout Techniques*
- Texas Instruments, *EMI Rejection Ratio of Operational Amplifiers* application note
- Texas Instruments, *QFN/SON PCB Attachment* application note
- Texas Instruments, *Quad Flatpack No-Lead Logic Packages* application note
- Texas Instruments, *Single-Ended Input to Differential Output Conversion Circuit* design guide
- Texas Instruments, *TLVx313 Low-Power, Rail-to-Rail In/Out, 500-µV Typical Offset, 1MHz Operational Amplifier for Cost-Sensitive Systems* data sheet
- Texas Instruments, *TLVx314 3MHz, Low-Power, Internal EMI Filter, RRIO, Operational Amplifier* data sheet

8.2 Receiving Notification of Documentation Updates

To receive notification of documentation updates, navigate to the device product folder on ti.com. Click on *Notifications* to register and receive a weekly digest of any product information that has changed. For change details, review the revision history included in any revised document.

8.3 Support Resources

TI E2E™ support forums are an engineer's go-to source for fast, verified answers and design help — straight from the experts. Search existing answers or ask your own question to get the quick design help you need.

Linked content is provided "AS IS" by the respective contributors. They do not constitute TI specifications and do not necessarily reflect TI's views; see TI's Terms of Use.

8.4 Trademarks

TI E2E™ is a trademark of Texas Instruments.
Bluetooth® is a registered trademark of Bluetooth SIG, Inc.
All trademarks are the property of their respective owners.

8.5 Electrostatic Discharge Caution

This integrated circuit can be damaged by ESD. Texas Instruments recommends that all integrated circuits be handled with appropriate precautions. Failure to observe proper handling and installation procedures can cause damage.

ESD damage can range from subtle performance degradation to complete device failure. Precision integrated circuits may be more susceptible to damage because very small parametric changes could cause the device not to meet its published specifications.

8.6 Glossary

TI Glossary	This glossary lists and explains terms, acronyms, and definitions.

9 Revision History

NOTE: Page numbers for previous revisions may differ from page numbers in the current version.

Changes from Revision K (July 2024) to Revision L (September 2024)	Page
• Deleted package preview note from TLV9062S (YCK, DSBGA) package in *Device Information* table	1

Changes from Revision J (September 2019) to Revision K (July 2024)	Page
• Updated the numbering format for tables, figures, and cross-references throughout the document	1
• Updated the *Device Information* table	1
• Added package preview note for TLV9062S (YCK, DSBGA) package in *Device Information* table	1

Copyright © 2024 Texas Instruments Incorporated

- Added YCK packages to the *Device Comparison* table.... 3
- Added TLV9062S YCK (DSBGA) pinout drawing to *Pin Configuration and Functions* section.... 4

Changes from Revision I (May 2019) to Revision J (September 2019) **Page**

- Deleted TLV9062IDDFR (SOT-23, 8) package preview notations throughout data sheet.... 1
- Added industry standard package names to *Device Comparison Table* 3
- Added note to packages with thermal pads, specifying that the thermal pads need to be connected to V–.... 4
- Added link to *Shutdown Function* section in $\overline{\text{SHDN}}$ pin function rows.... 4
- Added *EMI Rejection* section to the *Feature Description* section.... 21
- Changed *Shutdown Function* section to add more clarification 22

Changes from Revision H (April 2019) to Revision I (May 2019) **Page**

- Added DDF (SOT-23) thermal information to replace TBDs.... 10

Changes from Revision G (December 2018) to Revision H (April 2019) **Page**

- Added (SOT-23, 8) information to *Device Information* 1
- Added DDF package column to *Device Comparison Table* 3
- Added DDF (SOT-23) package, to *Pin Functions* 4
- Added DDF (SOT-23) package to *Thermal Information* 10

Changes from Revision F (September 2018) to Revision G (December 2018) **Page**

- Changed TLV9064 RUC package name from: (WQFN, 14) to: (X2QFN, 14) in *Device Information* table.... 1
- Added RUC (X2QFN) package, pinout information to Pin Functions: TLV9064 table.... 4
- Added TLV9064 RUC (X2QFN) pinout drawing to *Pin Configuration and Functions* section.... 4
- Added RUC (X2QFN) to Thermal Information: TLV9064 table.... 11

Changes from Revision E (July 2018) to Revision F (September 2018) **Page**

- Deleted Shutdown part numbers from data sheet header 1
- Deleted (X2QFN, 10) package from TLV9062 *Device Information* table.... 1
- Added references to shutdown part numbers in Description section 1
- Changed TLV906xS series to TLV906xS family throughout data sheet.... 1
- Added Shutdown devices to Device Comparison Table 3
- Changed pin namings for all pinout drawings to reflect updated nomenclature 4
- Added TLV9061S Thermal Information Table.... 10
- Added TLV9064S Thermal Information Table.... 11
- Deleted Partial Shutdown Amplifier Enable Time.... 12
- Added clarification on selecting resistors for a current sensing application in the Typical Applications Section 24
- Changed wording of third bullet in Layout Guidelines.... 26

Changes from Revision D (June 2018) to Revision E (July 2018) **Page**

- Added TLV9061S device to *Device Information* table.... 1
- Added TLV9064S device to *Device Information* table.... 1
- Added RUC and RUG packages to the *Device Comparison* table.... 3

Copyright © 2024 Texas Instruments Incorporated

- Added TLV9061S DBV (SOT-23) pinout drawing to *Pin Configuration and Functions* section.....4
- Added TLV9061S DBV (SOT-23) package, pinout information to *Pin Functions: TLV9061S* table.....4
- Added TLV9062S RUG (VSSOP) package, pinout drawing to *Pin Configuration and Functions* section.....4
- Added TLV9064 RTE pinout information to *Pin Functions: TLV9064* table.....4
- Added TLV9064S RTE (WQFN) pinout drawing to *Pin Configuration and Functions* section 4
- Added TLV9062S RUG (VSSOP) package, pinout information to *Pin Functions: TLV9062S* table.....4
- Added TLV9064 RTE (WQFN) pinout drawing to *Pin Configuration and Functions* section 4

Changes from Revision C (March 2018) to Revision D (June 2018) **Page**

- Added shutdown suffix to "TLV906x" to document title.....1
- Added "Shutdown Version" bullet to *Features* list 1
- Added TLV9062S device to *Device Information* table.....1
- Added shutdown text to *Description (continued)* section.....1
- Added "(V_S = [V+] – [V–]) supply voltage parameter in *Absolute Maximum Ratings* table.....9
- Added "input voltage range" and "output voltage range" parameters and values to *Recommended Operating Conditions* table.....9
- Added shutdown pin recommended operating conditions in *Recommended Operating Conditions* table.....9
- Added "T_A" symbol to "specified temperature" parameter to *Recommended Operating Conditions* table 9
- Added *Thermal Information: TLV9062S* thermal table data.....11
- Added shutdown section to *Electrical Characteristics: V_S (Total Supply Voltage) = (V+) – (V–) = 1.8V to 5.5V* table.....12
- Added *Shutdown Function* section 22

Changes from Revision B (October 2017) to Revision C (March 2018) **Page**

- Changed device status from Production Data/Mixed Status to Production Data 1
- Deleted package preview note from TLV9061 (DPW, X2SON) package in *Device Information* table 1
- Deleted package, preview note from TLV9061 DPW (X2SON) package, pinout drawing 4
- Changed formatting of *ESD Ratings* table to show different results for all packages 9
- Deleted package preview note from DPW (X2SON) package in *Thermal Information: TLV9061* table 10
- Deleted package preview note from DPW (X2SON) package in *Thermal Information: TLV9061* table 10

Changes from Revision A (June 2017) to Revision B (October 2017) **Page**

- Added 8-pin PW package, to *Pin Configuration and Functions* section 4
- Added DSG (WSON) package to *Thermal Information* table.....10
- Added PW (TSSOP) to TLV9062 *Thermal Information* table 10
- Changed maximum input offset voltage value from ±1.6mV to 2mV.....12
- Changed maximum input offset voltage value from ±1.5 to ±1.6mV.....12
- Changed minimum common-mode rejection ratio input voltage range from 86dB to 80dB 12
- Changed typical input current noise density value from 10 to 23fA/$\sqrt{\text{Hz}}$ 12
- Changed THD + N test conditions from V_S = 5V to V_S = 5.5V.....12
- Added V_{CM} = 2.5V test condition to THD + N parameter in *Electrical Characteristics* table 12
- Added maximum output voltage swing value from 25mV to 60mV.....12
- Changed maximum output voltage swing value from 15mV to 20mV 12

Changes from Revision * (March 2017) to Revision A (June 2017) **Page**

- Changed device status from Advance Information to Production Data 1

Copyright © 2024 Texas Instruments Incorporated

10 Mechanical, Packaging, and Orderable Information

The following pages include mechanical, packaging, and orderable information. This information is the most-current data available for the designated devices. This data is subject to change without notice and without revision of this document. For browser-based versions of this data sheet, see the left-hand navigation pane.

PACKAGE OUTLINE

YCK0009-C01

DSBGA - 0.33 mm max height

DIE SIZE BALL GRID ARRAY

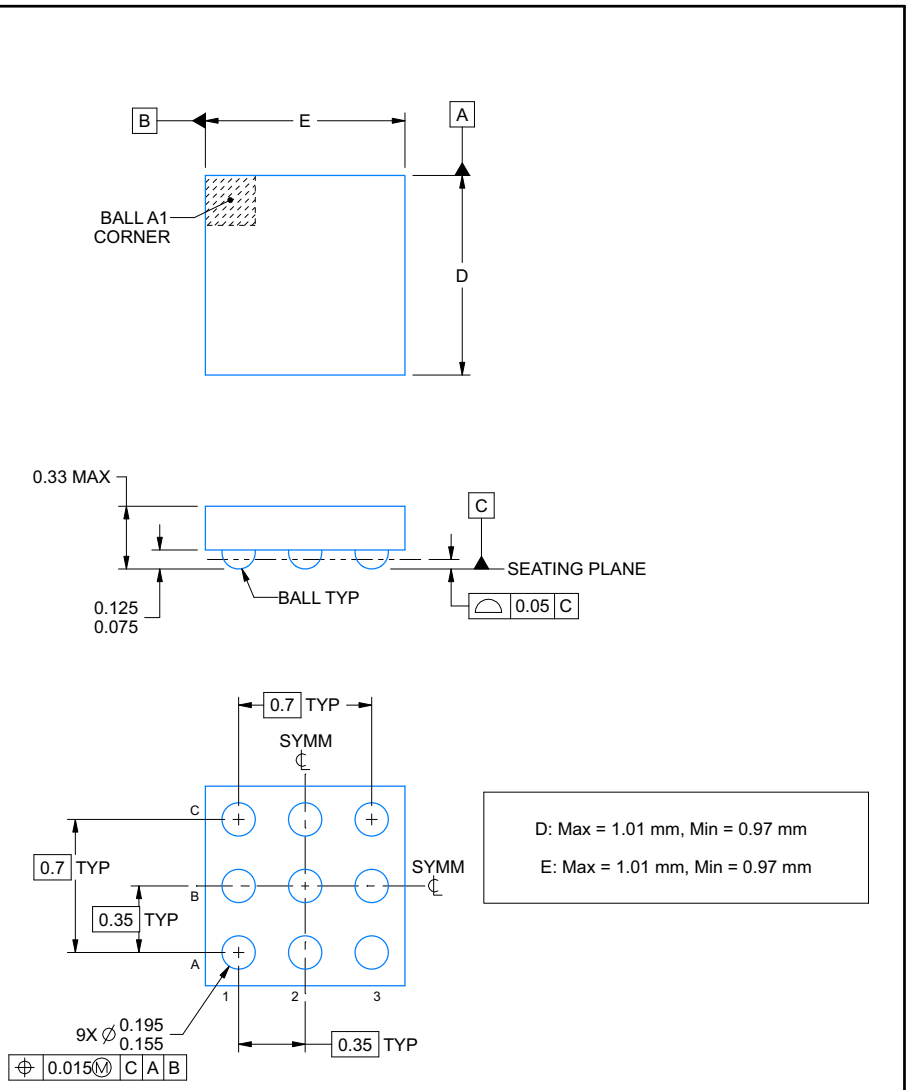

NOTES:

1. All linear dimensions are in millimeters. Any dimensions in parenthesis are for reference only. Dimensioning and tolerancing per ASME Y14.5M.
2. This drawing is subject to change without notice.

Copyright © 2024 Texas Instruments Incorporated

EXAMPLE BOARD LAYOUT

YCK0009-C01

DSBGA - 0.33 mm max height

DIE SIZE BALL GRID ARRAY

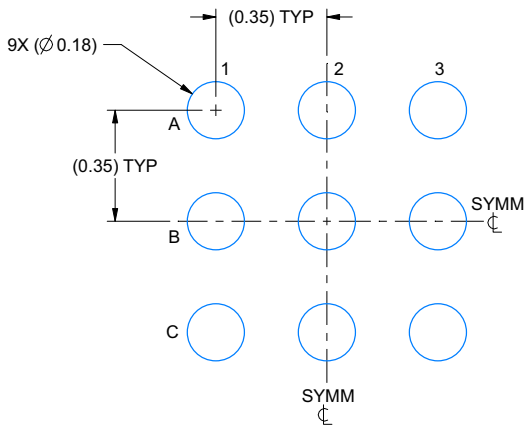

LAND PATTERN EXAMPLE
EXPOSED METAL SHOWN
SCALE: 50X

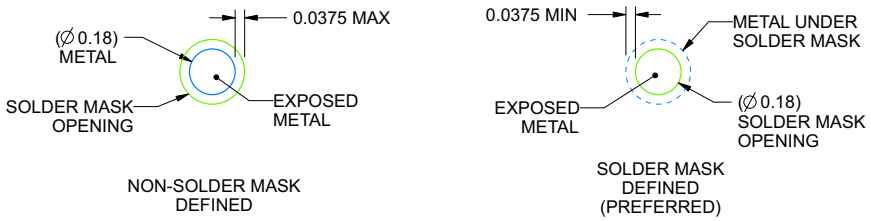

SOLDER MASK DETAILS
NOT TO SCALE

4226891/A 06/2021

NOTES: (continued)

3. Final dimensions may vary due to manufacturing tolerance considerations and also routing constraints.
   See Texas Instruments Literature No. SNVA009 (www.ti.com/lit/snva009).

Copyright © 2024 Texas Instruments Incorporated

EXAMPLE STENCIL DESIGN

YCK0009-C01 **DSBGA - 0.33 mm max height**

DIE SIZE BALL GRID ARRAY

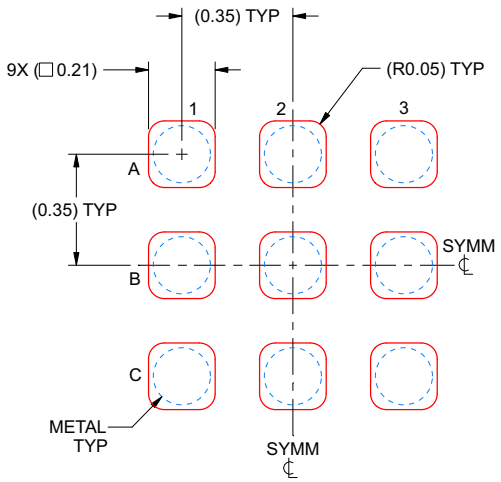

SOLDER PASTE EXAMPLE
BASED ON 0.075 mm THICK STENCIL
SCALE: 50X

4226891/A 06/2021

NOTES: (continued)

4. Laser cutting apertures with trapezoidal walls and rounded corners may offer better paste release.

Copyright © 2024 Texas Instruments Incorporated

PACKAGING INFORMATION

Orderable Device	Status (1)	Package Type	Package Drawing	Pins	Package Qty	Eco Plan (2)	Lead finish/ Ball material (6)	MSL Peak Temp (3)	Op Temp (°C)	Device Marking (4/5)	Samples
TLV9061IDBVR	ACTIVE	SOT-23	DBV	5	3000	RoHS & Green	NIPDAU | SN	Level-1-260C-UNLIM	-40 to 125	1OAF	Samples
TLV9061IDCKR	ACTIVE	SC70	DCK	5	3000	RoHS & Green	SN	Level-2-260C-1 YEAR	-40 to 125	1CA	Samples
TLV9061IDPWR	ACTIVE	X2SON	DPW	5	3000	RoHS & Green	NIPDAUAG	Level-2-260C-1 YEAR	-40 to 125	CG	Samples
TLV9061SIDBVR	ACTIVE	SOT-23	DBV	6	3000	RoHS & Green	NIPDAU	Level-1-260C-UNLIM	-40 to 125	1OEF	Samples
TLV9062IDDFR	ACTIVE	SOT-23-THIN	DDF	8	3000	RoHS & Green	Call TI | SN | NIPDAU	Level-1-260C-UNLIM	-40 to 125	T062	Samples
TLV9062IDGKR	ACTIVE	VSSOP	DGK	8	2500	RoHS & Green	NIPDAU | SN | NIPDAUAG	Level-2-260C-1 YEAR	-40 to 125	T062	Samples
TLV9062IDGKT	ACTIVE	VSSOP	DGK	8	250	RoHS & Green	NIPDAU | SN | NIPDAUAG	Level-2-260C-1 YEAR	-40 to 125	T062	Samples
TLV9062IDR	ACTIVE	SOIC	D	8	2500	RoHS & Green	NIPDAU	Level-1-260C-UNLIM	-40 to 125	TL9062	Samples
TLV9062IDSGR	ACTIVE	WSON	DSG	8	3000	RoHS & Green	NIPDAU	Level-1-260C-UNLIM	-40 to 125	T062	Samples
TLV9062IDSGT	ACTIVE	WSON	DSG	8	250	RoHS & Green	NIPDAU	Level-1-260C-UNLIM	-40 to 125	T062	Samples
TLV9062IPWR	ACTIVE	TSSOP	PW	8	2000	RoHS & Green	NIPDAU | SN	Level-2-260C-1 YEAR	-40 to 125	TL9062	Samples
TLV9062SIDGSR	ACTIVE	VSSOP	DGS	10	2500	RoHS & Green	NIPDAUAG	Level-2-260C-1 YEAR	-40 to 125	1TDX	Samples
TLV9062SIRUGR	ACTIVE	X2QFN	RUG	10	3000	RoHS & Green	NIPDAUAG	Level-2-260C-1 YEAR	-40 to 125	EOF	Samples
TLV9062SIYCKR	ACTIVE	DSBGA	YCK	9	3000	RoHS & Green	SNAGCU	Level-1-260C-UNLIM	-40 to 125	EH	Samples
TLV9064IDR	ACTIVE	SOIC	D	14	2500	RoHS & Green	NIPDAU	Level-2-260C-1 YEAR	-40 to 125	TLV9064D	Samples
TLV9064IPWR	ACTIVE	TSSOP	PW	14	2000	RoHS & Green	NIPDAU | SN	Level-2-260C-1 YEAR	-40 to 125	TLV9064	Samples
TLV9064IPWT	ACTIVE	TSSOP	PW	14	250	RoHS & Green	NIPDAU | SN	Level-2-260C-1 YEAR	-40 to 125	TLV9064	Samples
TLV9064IRTER	ACTIVE	WQFN	RTE	16	3000	RoHS & Green	NIPDAU	Level-1-260C-UNLIM	-40 to 125	T9064	Samples
TLV9064IRUCR	ACTIVE	QFN	RUC	14	3000	RoHS & Green	NIPDAU	Level-2-260C-1 YEAR	-40 to 125	1DD	Samples

Orderable Device	Status (1)	Package Type	Package Drawing	Pins	Package Qty	Eco Plan (2)	Lead finish/ Ball material (6)	MSL Peak Temp (3)	Op Temp (°C)	Device Marking (4/5)	Samples
TLV9064SIRTER	ACTIVE	WQFN	RTE	16	3000	RoHS & Green	NIPDAU	Level-1-260C-UNLIM	-40 to 125	T9064S	Samples

(1) The marketing status values are defined as follows:
ACTIVE: Product device recommended for new designs.
LIFEBUY: TI has announced that the device will be discontinued, and a lifetime-buy period is in effect.
NRND: Not recommended for new designs. Device is in production to support existing customers, but TI does not recommend using this part in a new design.
PREVIEW: Device has been announced but is not in production. Samples may or may not be available.
OBSOLETE: TI has discontinued the production of the device.

(2) **RoHS:** TI defines "RoHS" to mean semiconductor products that are compliant with the current EU RoHS requirements for all 10 RoHS substances, including the requirement that RoHS substance do not exceed 0.1% by weight in homogeneous materials. Where designed to be soldered at high temperatures, "RoHS" products are suitable for use in specified lead-free processes. TI may reference these types of products as "Pb-Free".
RoHS Exempt: TI defines "RoHS Exempt" to mean products that contain lead but are compliant with EU RoHS pursuant to a specific EU RoHS exemption.
Green: TI defines "Green" to mean the content of Chlorine (Cl) and Bromine (Br) based flame retardants meet JS709B low halogen requirements of <=1000ppm threshold. Antimony trioxide based flame retardants must also meet the <=1000ppm threshold requirement.

(3) MSL, Peak Temp. - The Moisture Sensitivity Level rating according to the JEDEC industry standard classifications, and peak solder temperature.

(4) There may be additional marking, which relates to the logo, the lot trace code information, or the environmental category on the device.

(5) Multiple Device Markings will be inside parentheses. Only one Device Marking contained in parentheses and separated by a "~" will appear on a device. If a line is indented then it is a continuation of the previous line and the two combined represent the entire Device Marking for that device.

(6) Lead finish/Ball material - Orderable Devices may have multiple material finish options. Finish options are separated by a vertical ruled line. Lead finish/Ball material values may wrap to two lines if the finish value exceeds the maximum column width.

Important Information and Disclaimer: The information provided on this page represents TI's knowledge and belief as of the date that it is provided. TI bases its knowledge and belief on information provided by third parties, and makes no representation or warranty as to the accuracy of such information. Efforts are underway to better integrate information from third parties. TI has taken and continues to take reasonable steps to provide representative and accurate information but may not have conducted destructive testing or chemical analysis on incoming materials and chemicals. TI and TI suppliers consider certain information to be proprietary, and thus CAS numbers and other limited information may not be available for release.

In no event shall TI's liability arising out of such information exceed the total purchase price of the TI part(s) at issue in this document sold by TI to Customer on an annual basis.

OTHER QUALIFIED VERSIONS OF TLV9061, TLV9062, TLV9064 :

- Automotive : TLV9061-Q1, TLV9062-Q1, TLV9064-Q1

NOTE: Qualified Version Definitions:

- Automotive - Q100 devices qualified for high-reliability automotive applications targeting zero defects

TAPE AND REEL INFORMATION

REEL DIMENSIONS

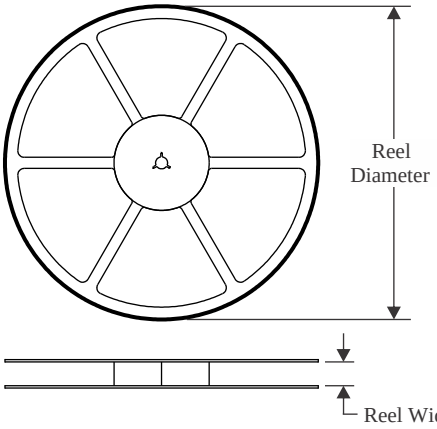

TAPE DIMENSIONS

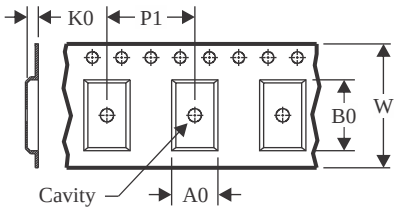

A0	Dimension designed to accommodate the component width
B0	Dimension designed to accommodate the component length
K0	Dimension designed to accommodate the component thickness
W	Overall width of the carrier tape
P1	Pitch between successive cavity centers

QUADRANT ASSIGNMENTS FOR PIN 1 ORIENTATION IN TAPE

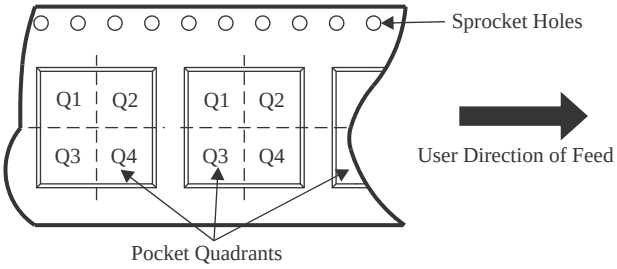

*All dimensions are nominal

Device	Package Type	Package Drawing	Pins	SPQ	Reel Diameter (mm)	Reel Width W1 (mm)	A0 (mm)	B0 (mm)	K0 (mm)	P1 (mm)	W (mm)	Pin1 Quadrant
TLV9061IDBVR	SOT-23	DBV	5	3000	180.0	8.4	3.2	3.2	1.4	4.0	8.0	Q3
TLV9061IDBVR	SOT-23	DBV	5	3000	180.0	8.4	3.2	3.2	1.4	4.0	8.0	Q3
TLV9061IDCKR	SC70	DCK	5	3000	180.0	8.4	2.3	2.5	1.2	4.0	8.0	Q3
TLV9061IDPWR	X2SON	DPW	5	3000	178.0	8.4	0.91	0.91	0.5	2.0	8.0	Q2
TLV9061SIDBVR	SOT-23	DBV	6	3000	180.0	8.4	3.2	3.2	1.4	4.0	8.0	Q3
TLV9062IDDFR	SOT-23-THIN	DDF	8	3000	180.0	8.4	3.2	3.2	1.4	4.0	8.0	Q3
TLV9062IDGKR	VSSOP	DGK	8	2500	330.0	12.4	6.4	5.2	2.1	8.0	12.0	Q1
TLV9062IDGKT	VSSOP	DGK	8	250	330.0	12.4	6.4	5.2	2.1	8.0	12.0	Q1
TLV9062IDR	SOIC	D	8	2500	330.0	12.4	6.4	5.2	2.1	8.0	12.0	Q1
TLV9062IDSGR	WSON	DSG	8	3000	180.0	8.4	2.3	2.3	1.15	4.0	8.0	Q2
TLV9062IDSGT	WSON	DSG	8	250	180.0	8.4	2.3	2.3	1.15	4.0	8.0	Q2
TLV9062IPWR	TSSOP	PW	8	2000	330.0	12.4	7.0	3.6	1.6	8.0	12.0	Q1
TLV9062SIDGSR	VSSOP	DGS	10	2500	330.0	12.4	5.3	3.4	1.4	8.0	12.0	Q1
TLV9062SIRUGR	X2QFN	RUG	10	3000	178.0	8.4	1.75	2.25	0.56	4.0	8.0	Q1
TLV9062SIYCKR	DSBGA	YCK	9	3000	180.0	8.4	1.1	1.1	0.4	2.0	8.0	Q1

Device	Package Type	Package Drawing	Pins	SPQ	Reel Diameter (mm)	Reel Width W1 (mm)	A0 (mm)	B0 (mm)	K0 (mm)	P1 (mm)	W (mm)	Pin1 Quadrant
TLV9064IDR	SOIC	D	14	2500	330.0	16.4	6.5	9.0	2.1	8.0	16.0	Q1
TLV9064IPWR	TSSOP	PW	14	2000	330.0	12.4	6.9	5.6	1.6	8.0	12.0	Q1
TLV9064IPWT	TSSOP	PW	14	250	330.0	12.4	6.9	5.6	1.6	8.0	12.0	Q1
TLV9064IRTER	WQFN	RTE	16	3000	330.0	12.4	3.3	3.3	1.1	8.0	12.0	Q2
TLV9064IRUCR	QFN	RUC	14	3000	180.0	9.5	2.16	2.16	0.5	4.0	8.0	Q2
TLV9064SIRTER	WQFN	RTE	16	3000	330.0	12.4	3.3	3.3	1.1	8.0	12.0	Q2

TAPE AND REEL BOX DIMENSIONS

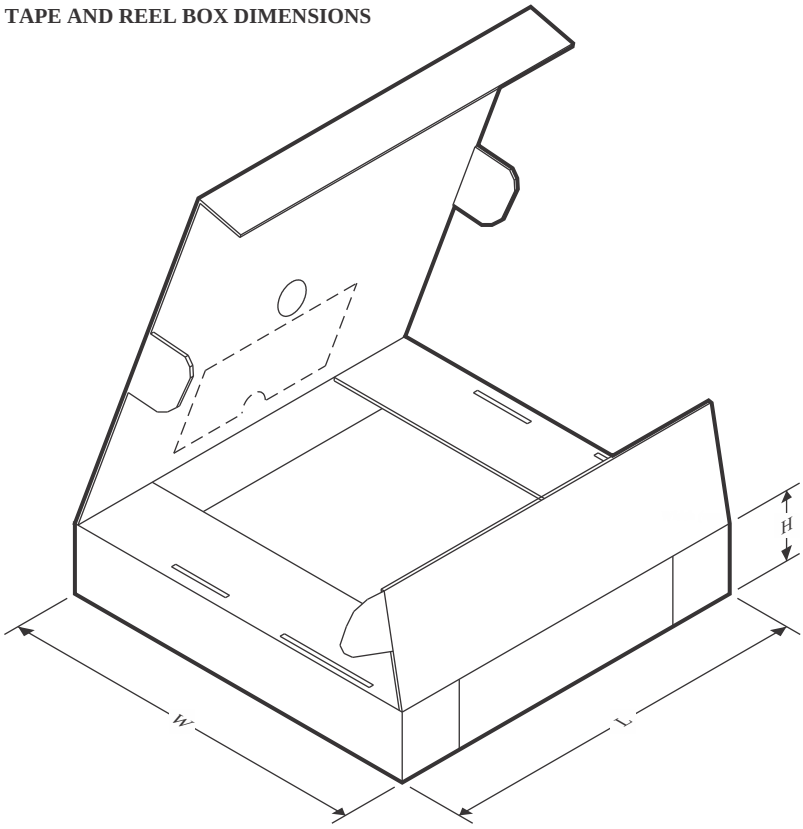

*All dimensions are nominal

Device	Package Type	Package Drawing	Pins	SPQ	Length (mm)	Width (mm)	Height (mm)
TLV9061IDBVR	SOT-23	DBV	5	3000	210.0	185.0	35.0
TLV9061IDBVR	SOT-23	DBV	5	3000	210.0	185.0	35.0
TLV9061IDCKR	SC70	DCK	5	3000	210.0	185.0	35.0
TLV9061IDPWR	X2SON	DPW	5	3000	205.0	200.0	33.0
TLV9061SIDBVR	SOT-23	DBV	6	3000	210.0	185.0	35.0
TLV9062IDDFR	SOT-23-THIN	DDF	8	3000	210.0	185.0	35.0
TLV9062IDGKR	VSSOP	DGK	8	2500	356.0	356.0	35.0
TLV9062IDGKT	VSSOP	DGK	8	250	356.0	356.0	35.0
TLV9062IDR	SOIC	D	8	2500	356.0	356.0	35.0
TLV9062IDSGR	WSON	DSG	8	3000	210.0	185.0	35.0
TLV9062IDSGT	WSON	DSG	8	250	210.0	185.0	35.0
TLV9062IPWR	TSSOP	PW	8	2000	356.0	356.0	35.0
TLV9062SIDGSR	VSSOP	DGS	10	2500	366.0	364.0	50.0
TLV9062SIRUGR	X2QFN	RUG	10	3000	205.0	200.0	33.0
TLV9062SIYCKR	DSBGA	YCK	9	3000	182.0	182.0	20.0
TLV9064IDR	SOIC	D	14	2500	356.0	356.0	35.0
TLV9064IPWR	TSSOP	PW	14	2000	353.0	353.0	32.0
TLV9064IPWT	TSSOP	PW	14	250	353.0	353.0	32.0

Device	Package Type	Package Drawing	Pins	SPQ	Length (mm)	Width (mm)	Height (mm)
TLV9064IRTER	WQFN	RTE	16	3000	367.0	367.0	35.0
TLV9064IRUCR	QFN	RUC	14	3000	205.0	200.0	30.0
TLV9064SIRTER	WQFN	RTE	16	3000	367.0	367.0	35.0

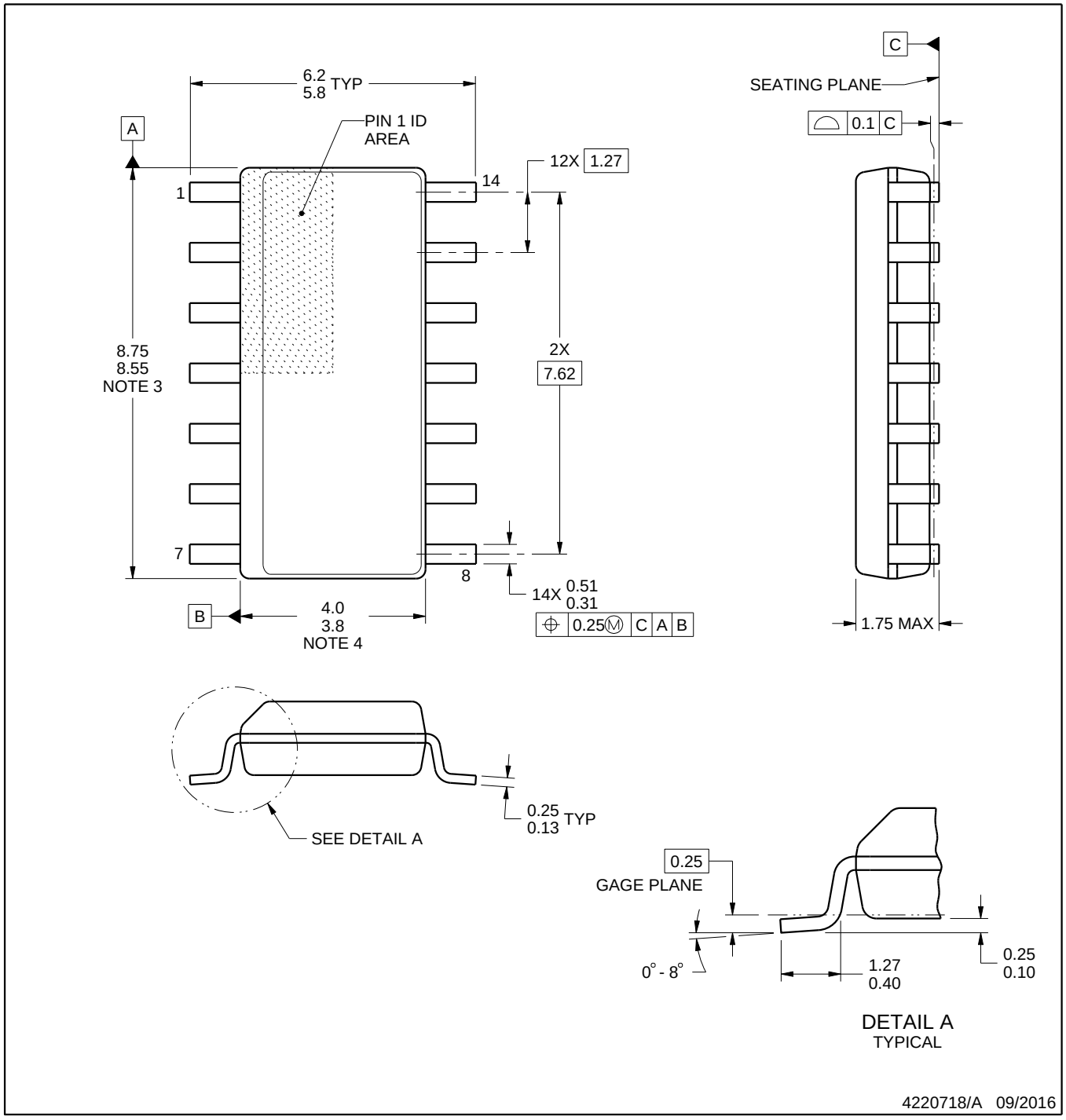

NOTES:

1. All linear dimensions are in millimeters. Dimensions in parenthesis are for reference only. Dimensioning and tolerancing per ASME Y14.5M.
2. This drawing is subject to change without notice.
3. This dimension does not include mold flash, protrusions, or gate burrs. Mold flash, protrusions, or gate burrs shall not exceed 0.15 mm, per side.
4. This dimension does not include interlead flash. Interlead flash shall not exceed 0.43 mm, per side.
5. Reference JEDEC registration MS-012, variation AB.

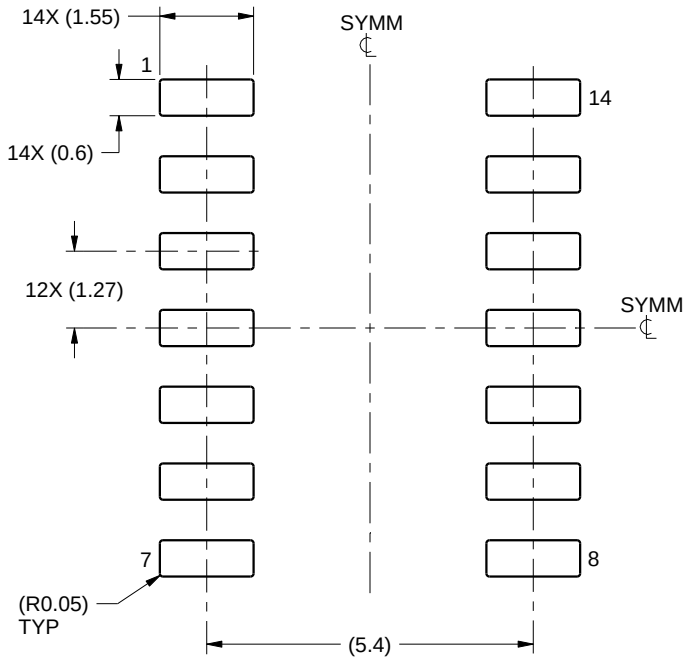

LAND PATTERN EXAMPLE
SCALE:8X

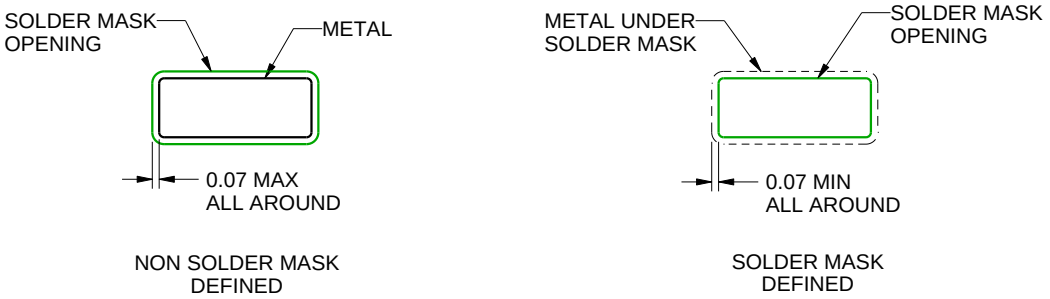

SOLDER MASK DETAILS

4220718/A 09/2016

NOTES: (continued)

6. Publication IPC-7351 may have alternate designs.
7. Solder mask tolerances between and around signal pads can vary based on board fabrication site.

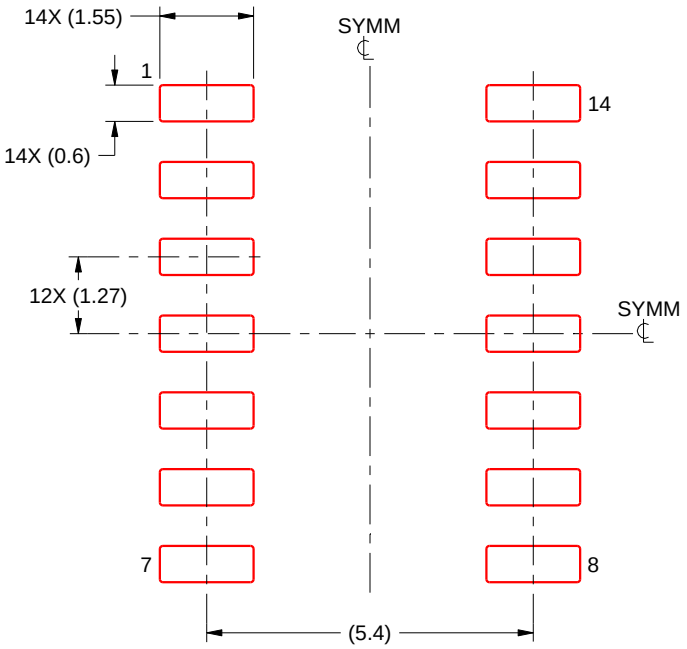

SOLDER PASTE EXAMPLE
BASED ON 0.125 mm THICK STENCIL
SCALE:8X

4220718/A 09/2016

NOTES: (continued)

8. Laser cutting apertures with trapezoidal walls and rounded corners may offer better paste release. IPC-7525 may have alternate design recommendations.
9. Board assembly site may have different recommendations for stencil design.

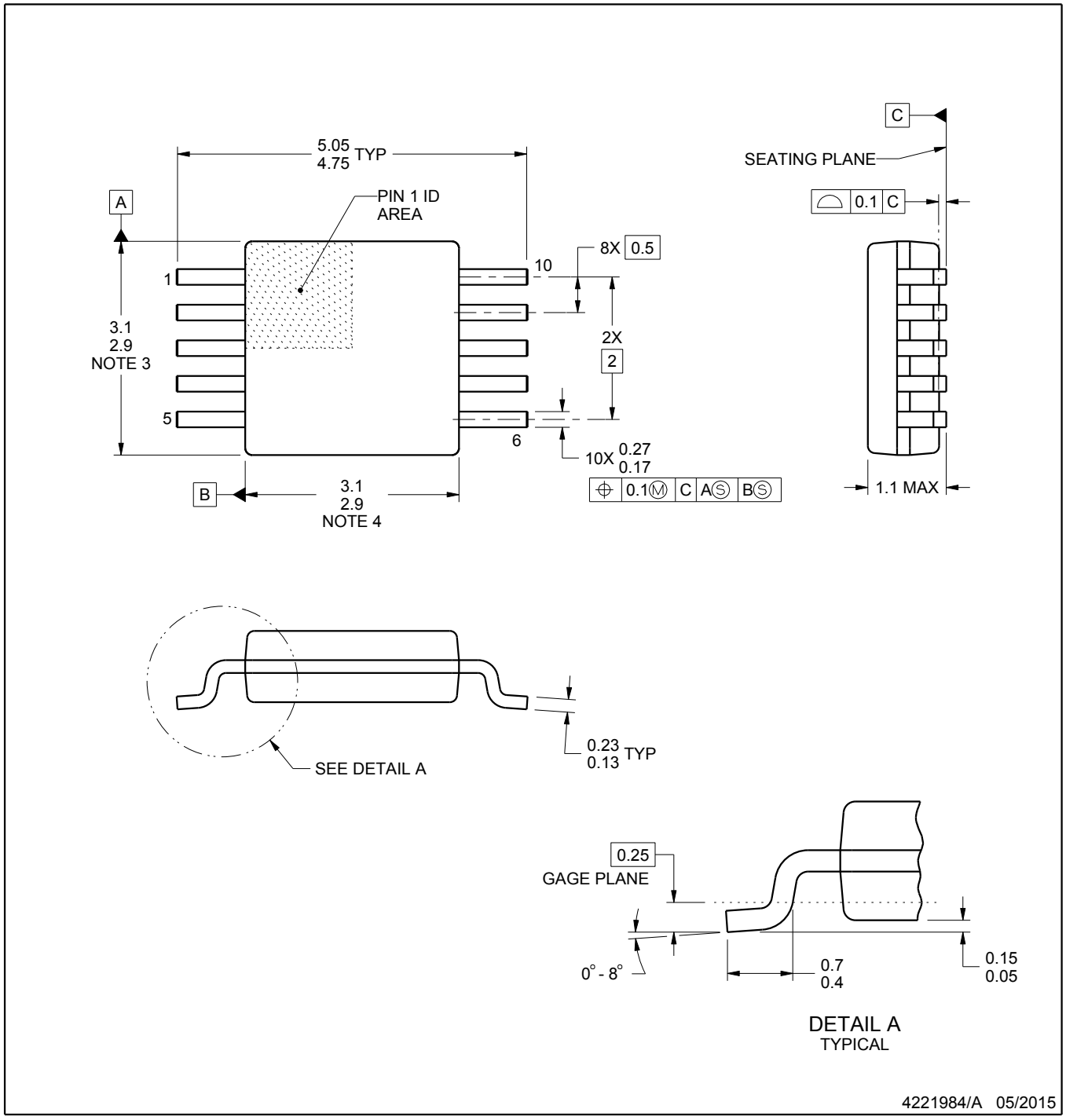

NOTES:

1. All linear dimensions are in millimeters. Any dimensions in parenthesis are for reference only. Dimensioning and tolerancing per ASME Y14.5M.
2. This drawing is subject to change without notice.
3. This dimension does not include mold flash, protrusions, or gate burrs. Mold flash, protrusions, or gate burrs shall not exceed 0.15 mm per side.
4. This dimension does not include interlead flash. Interlead flash shall not exceed 0.25 mm per side.
5. Reference JEDEC registration MO-187, variation BA.

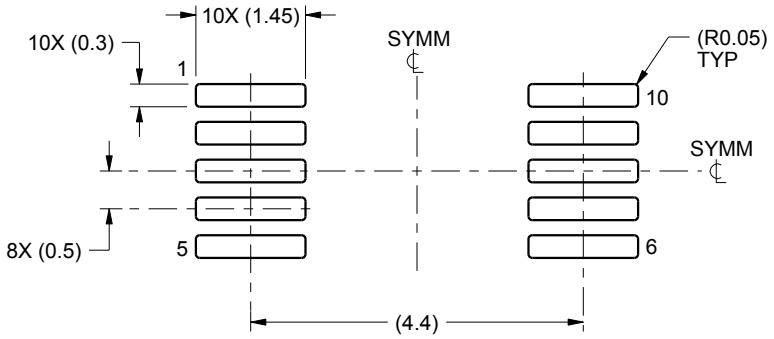

LAND PATTERN EXAMPLE
SCALE:10X

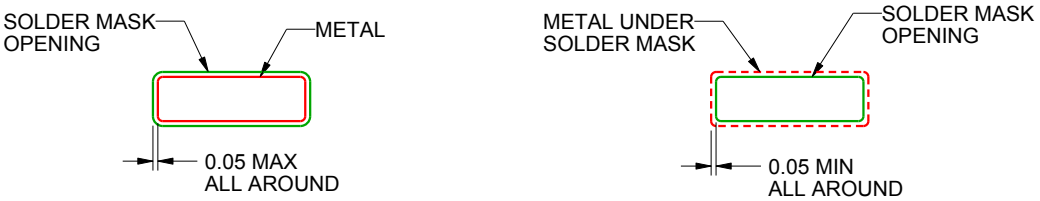

NON SOLDER MASK
DEFINED

SOLDER MASK
DEFINED

SOLDER MASK DETAILS
NOT TO SCALE

4221984/A 05/2015

NOTES: (continued)

6. Publication IPC-7351 may have alternate designs.
7. Solder mask tolerances between and around signal pads can vary based on board fabrication site.

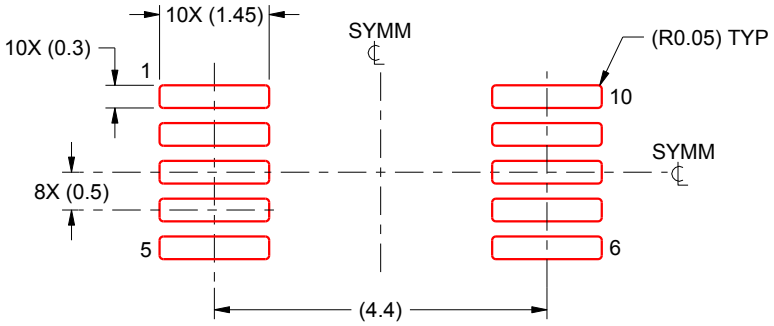

SOLDER PASTE EXAMPLE
BASED ON 0.125 mm THICK STENCIL
SCALE:10X

4221984/A 05/2015

NOTES: (continued)

8. Laser cutting apertures with trapezoidal walls and rounded corners may offer better paste release. IPC-7525 may have alternate design recommendations.
9. Board assembly site may have different recommendations for stencil design.

DPW 5 X2SON - 0.4 mm max height

PLASTIC SMALL OUTLINE - NO LEAD

Images above are just a representation of the package family, actual package may vary.
Refer to the product data sheet for package details.

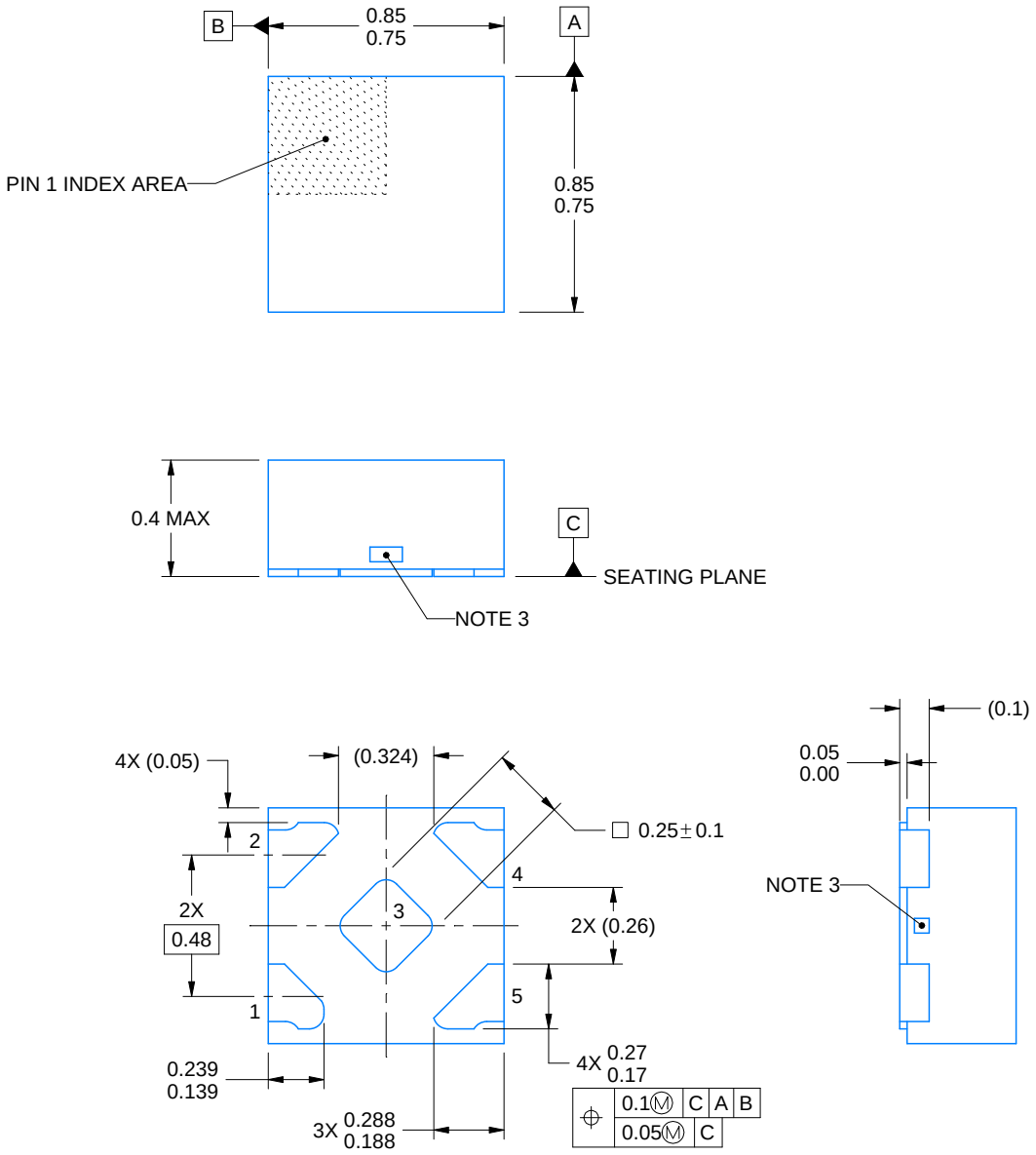

4223102/D 03/2022

NOTES:

1. All linear dimensions are in millimeters. Any dimensions in parenthesis are for reference only. Dimensioning and tolerancing per ASME Y14.5M.
2. This drawing is subject to change without notice.
3. The size and shape of this feature may vary.

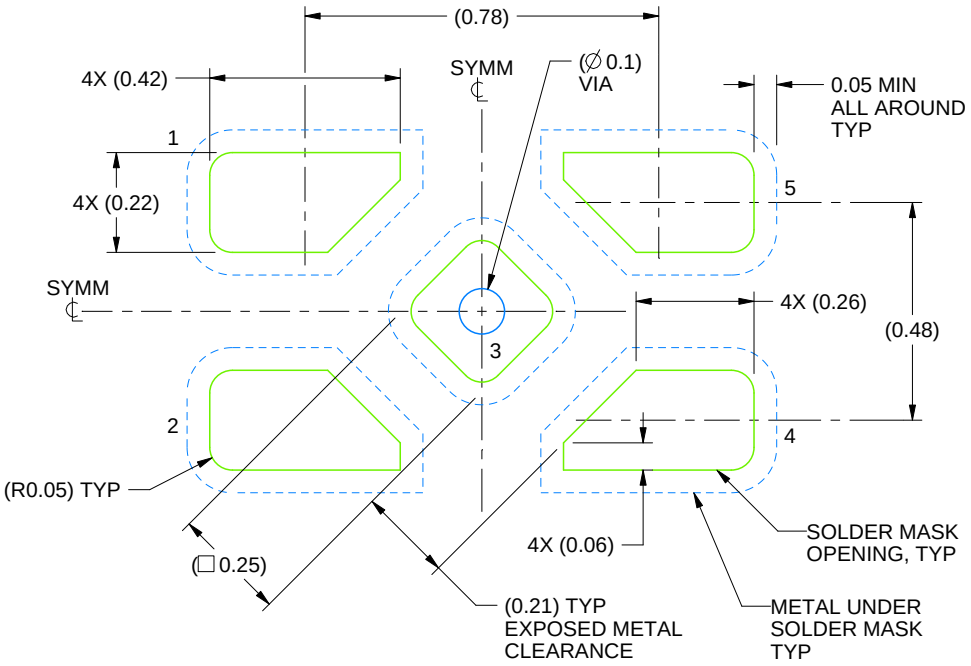

LAND PATTERN EXAMPLE
SOLDER MASK DEFINED
SCALE:60X

4223102/D 03/2022

NOTES: (continued)

4. This package is designed to be soldered to a thermal pad on the board. For more information, refer to QFN/SON PCB application note in literature No. SLUA271 (www.ti.com/lit/slua271).

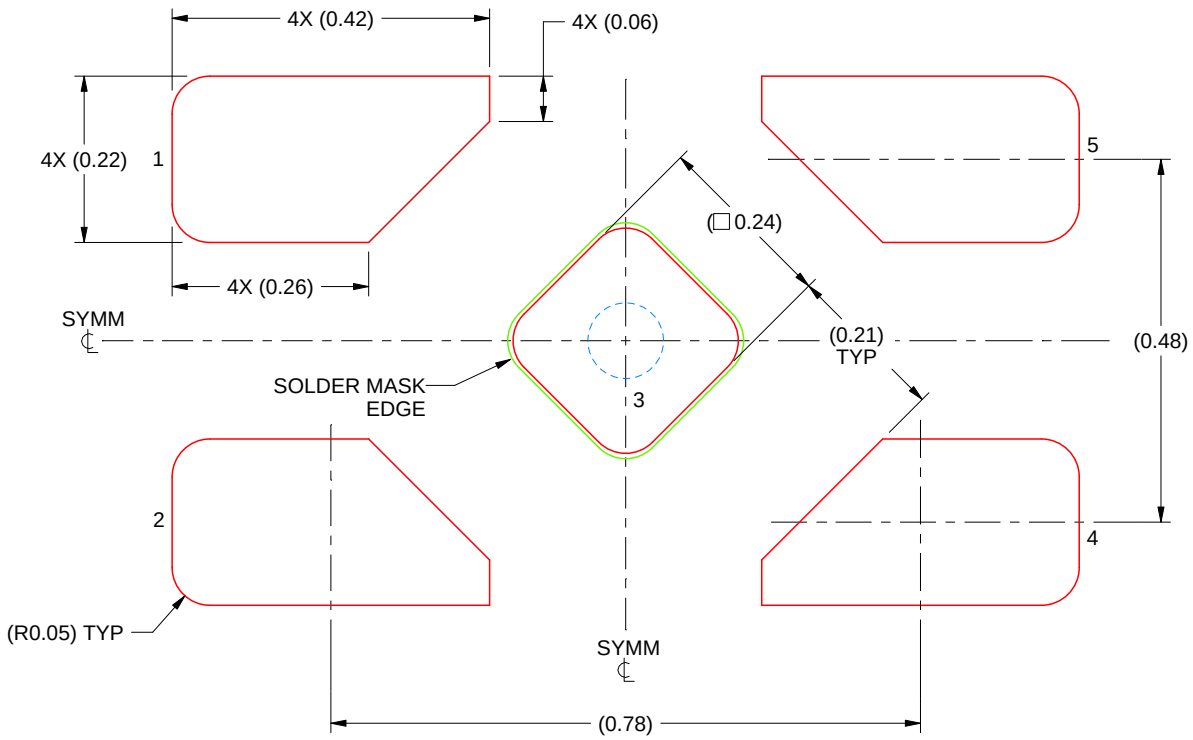

SOLDER PASTE EXAMPLE
BASED ON 0.1 mm THICK STENCIL

EXPOSED PAD 3
92% PRINTED SOLDER COVERAGE BY AREA UNDER PACKAGE
SCALE:100X

4223102/D 03/2022

NOTES: (continued)

5. Laser cutting apertures with trapezoidal walls and rounded corners may offer better paste release. IPC-7525 may have alternate design recommendations.

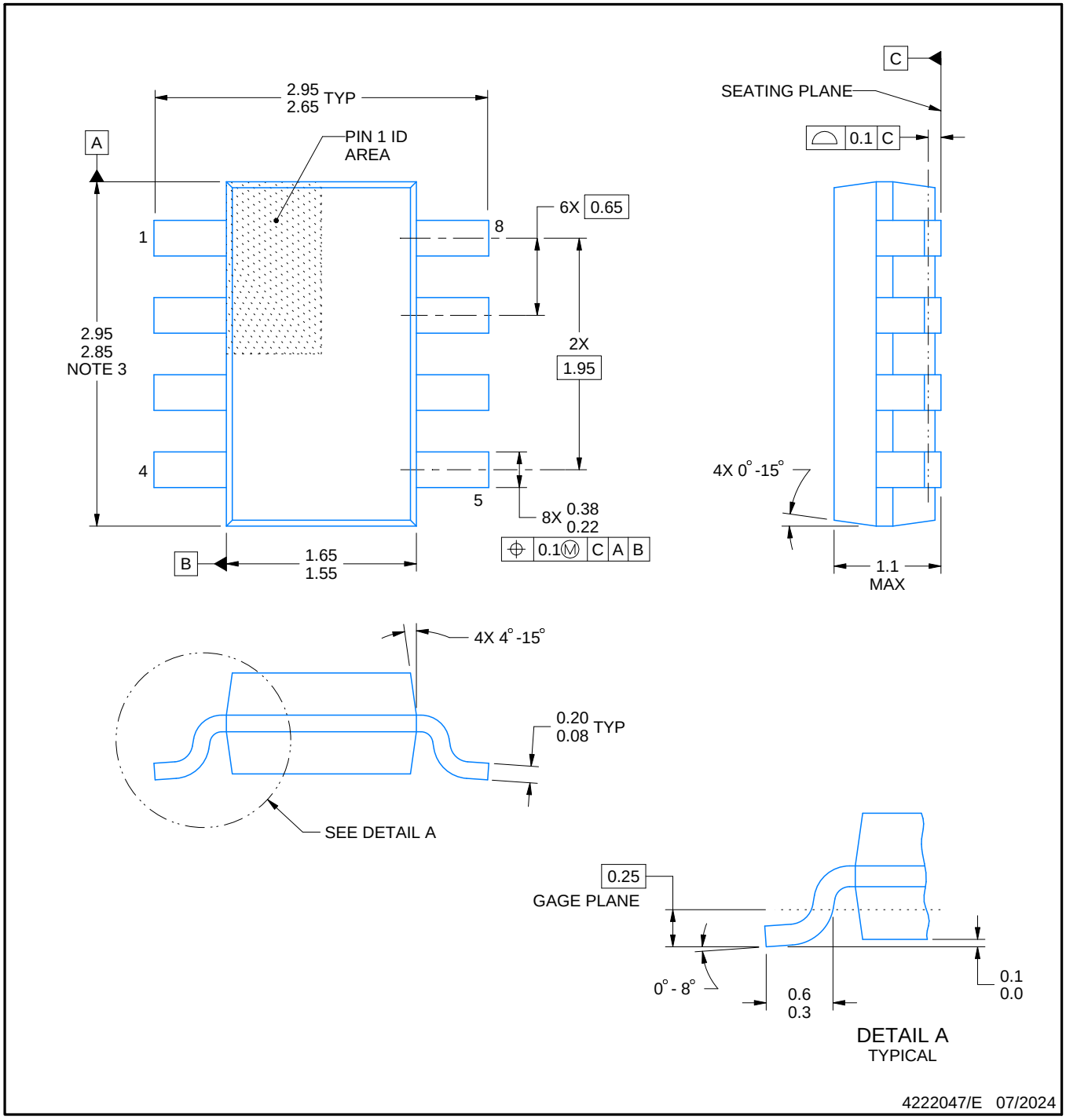

NOTES:

1. All linear dimensions are in millimeters. Any dimensions in parenthesis are for reference only. Dimensioning and tolerancing per ASME Y14.5M.
2. This drawing is subject to change without notice.
3. This dimension does not include mold flash, protrusions, or gate burrs. Mold flash, protrusions, or gate burrs shall not exceed 0.15 mm per side.

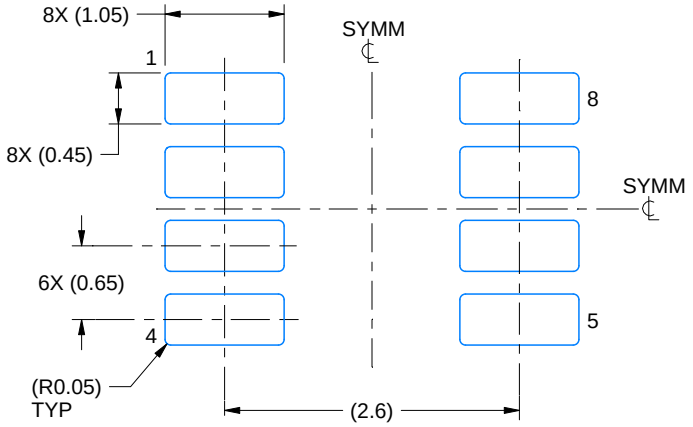

LAND PATTERN EXAMPLE
EXPOSED METAL SHOWN
SCALE:15X

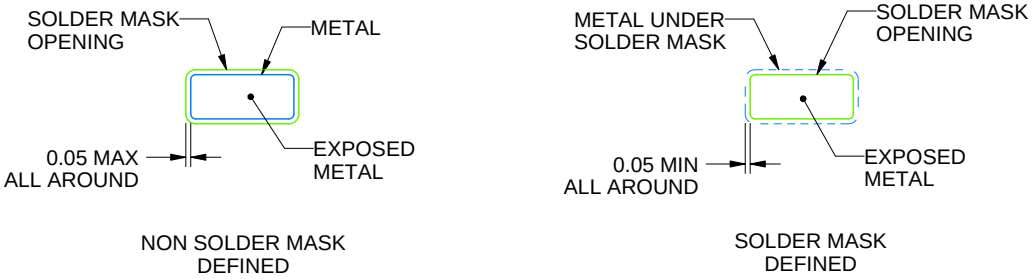

SOLDER MASK DETAILS

4222047/E 07/2024

NOTES: (continued)

4. Publication IPC-7351 may have alternate designs.
5. Solder mask tolerances between and around signal pads can vary based on board fabrication site.

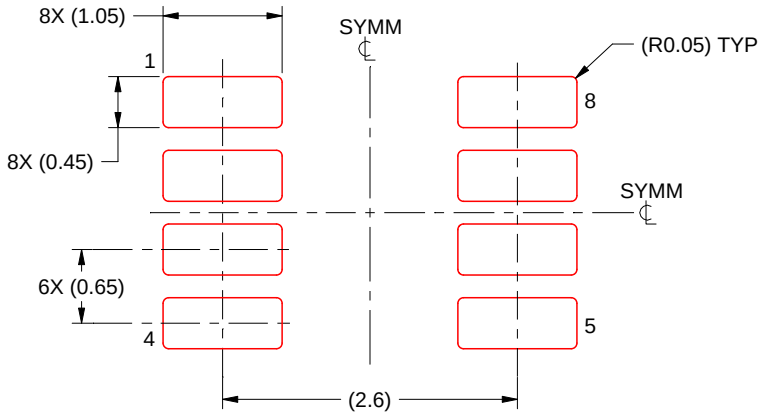

SOLDER PASTE EXAMPLE
BASED ON 0.125 mm THICK STENCIL
SCALE:15X

4222047/E 07/2024

NOTES: (continued)

6. Laser cutting apertures with trapezoidal walls and rounded corners may offer better paste release. IPC-7525 may have alternate design recommendations.
7. Board assembly site may have different recommendations for stencil design.

RUG (R–PQFP–N10) PLASTIC QUAD FLATPACK

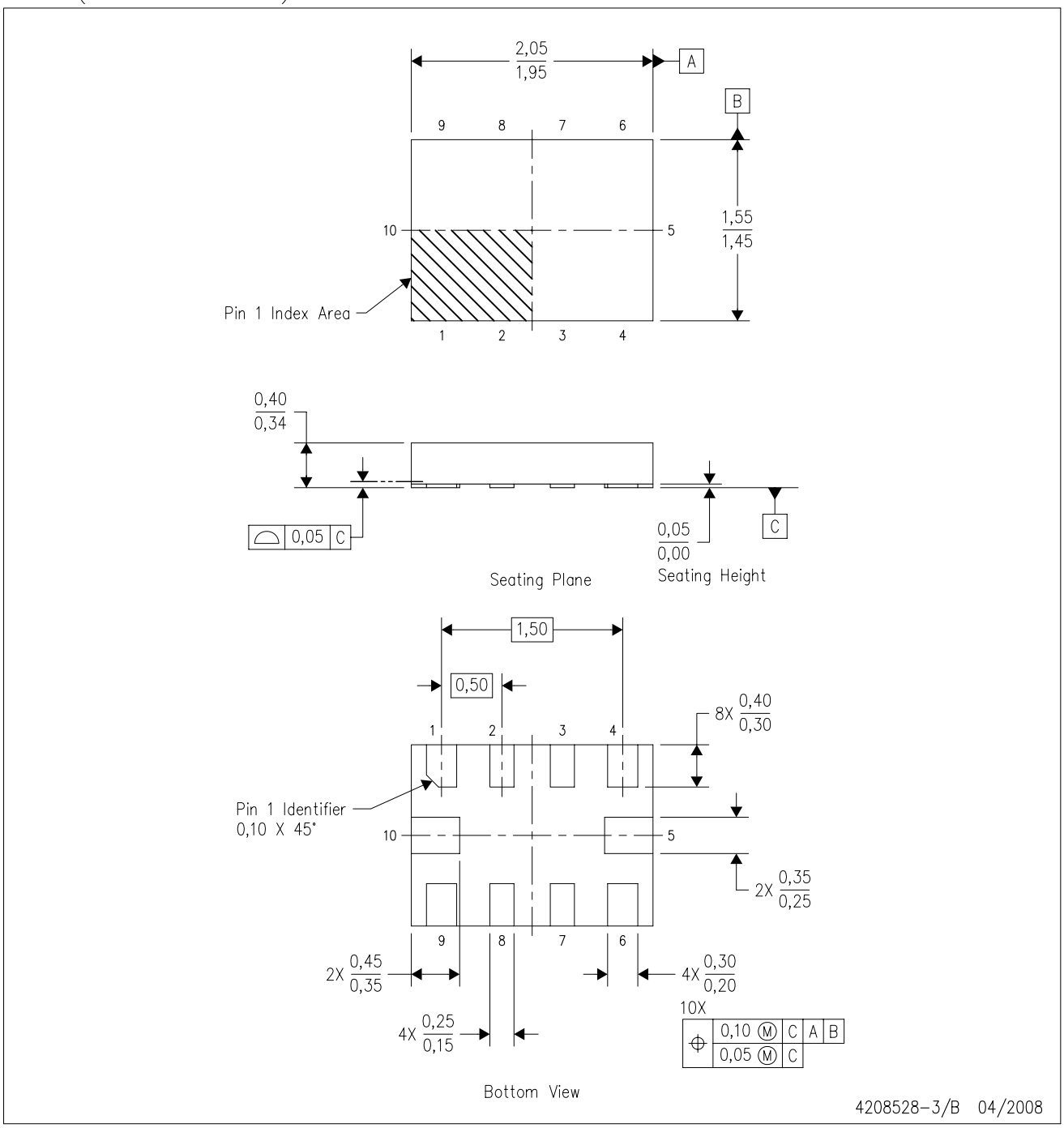

NOTES:
A. All linear dimensions are in millimeters. Dimensioning and tolerancing per ASME Y14.5M–1994.
B. This drawing is subject to change without notice.
C. QFN (Quad Flatpack No–Lead) package configuration.
D. This package complies to JEDEC MO–288 variation X2EFD.

RUG (R–PQFP–N10)

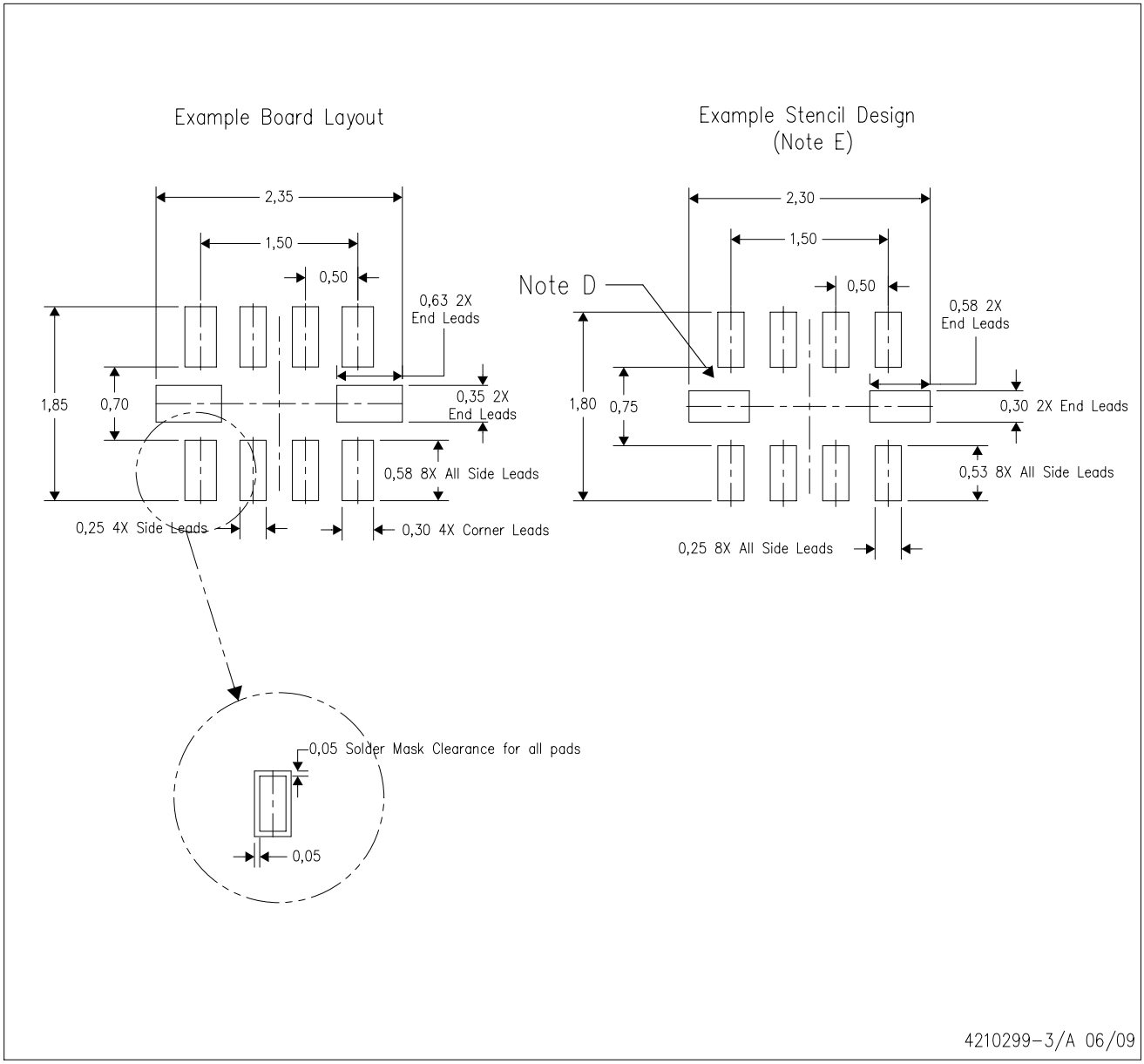

NOTES:
A. All linear dimensions are in millimeters.
B. This drawing is subject to change without notice.
C. Publication IPC–7351 is recommended for alternate designs.
D. Customers should contact their board fabrication site for minimum solder mask web tolerances between signal pads.
E. Maximum stencil thickness 0,127 mm (5 mils). All linear dimensions are in millimeters.
F. Laser cutting apertures with trapezoidal walls and also rounding corners will offer better paste release. Customers should contact their board assembly site for stencil design recommendations. Refer to IPC 7525 for stencil design considerations.
G. Side aperture dimensions over–print land for acceptable area ratio > 0.66. Customer may reduce side aperture dimensions if stencil manufacturing process allows for sufficient release at smaller opening.

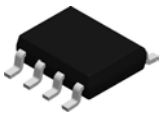

PACKAGE OUTLINE

D0008A

SOIC - 1.75 mm max height

SMALL OUTLINE INTEGRATED CIRCUIT

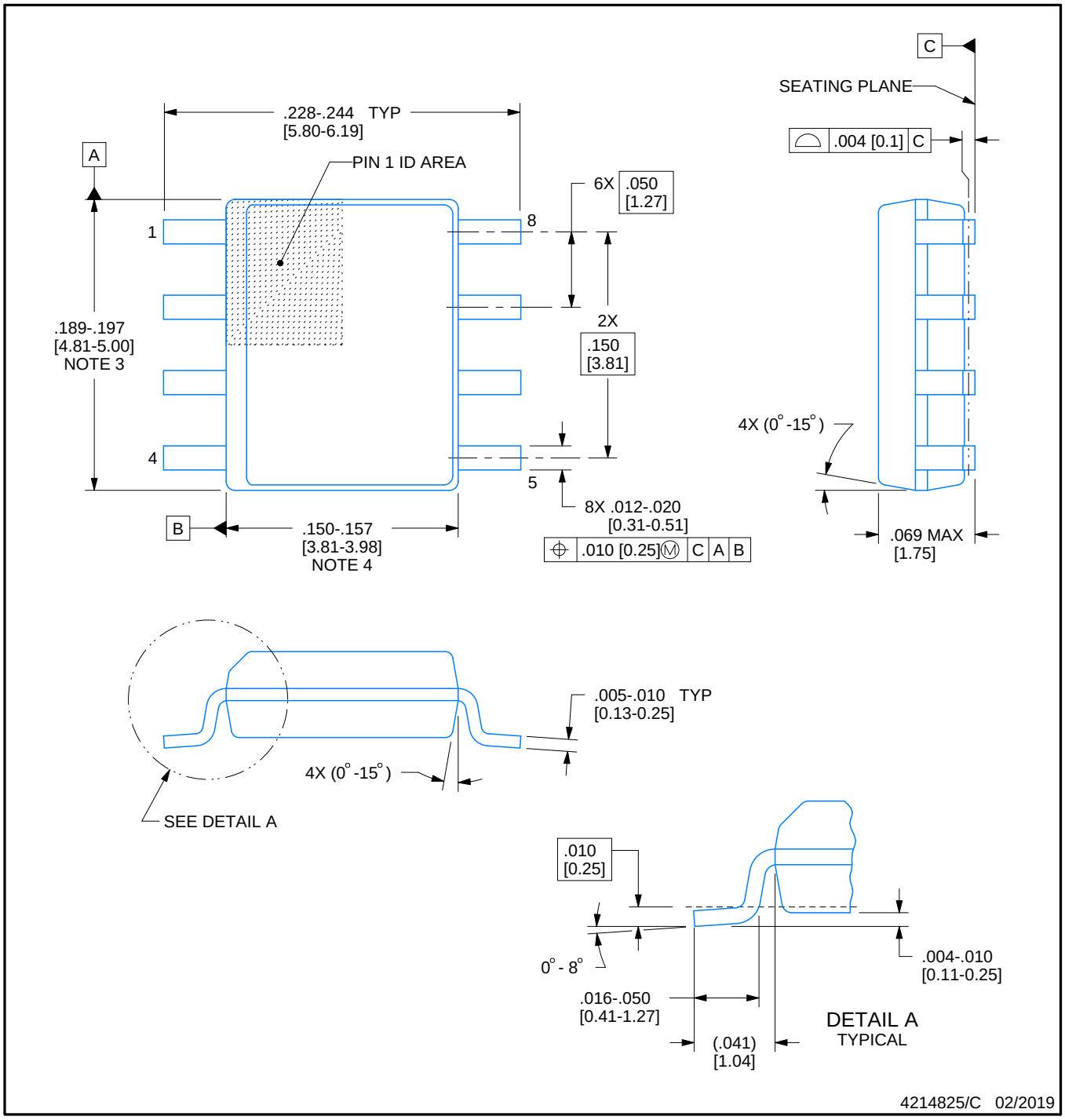

NOTES:

1. Linear dimensions are in inches [millimeters]. Dimensions in parenthesis are for reference only. Controlling dimensions are in inches. Dimensioning and tolerancing per ASME Y14.5M.
2. This drawing is subject to change without notice.
3. This dimension does not include mold flash, protrusions, or gate burrs. Mold flash, protrusions, or gate burrs shall not exceed .006 [0.15] per side.
4. This dimension does not include interlead flash.
5. Reference JEDEC registration MS-012, variation AA.

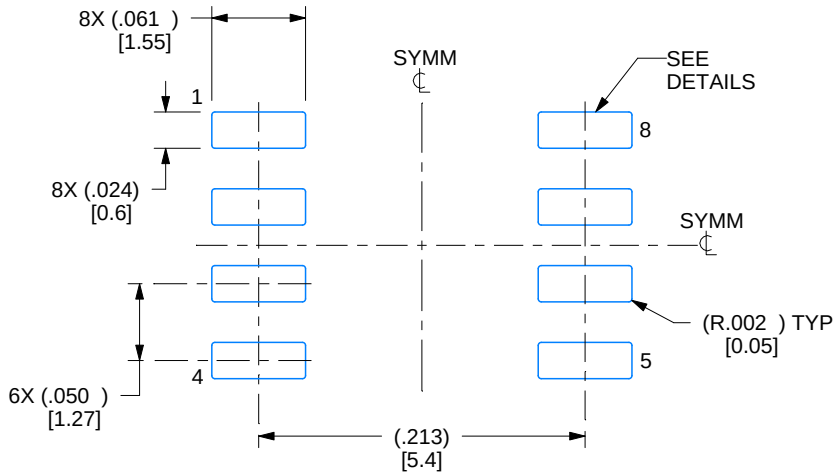

LAND PATTERN EXAMPLE
EXPOSED METAL SHOWN
SCALE:8X

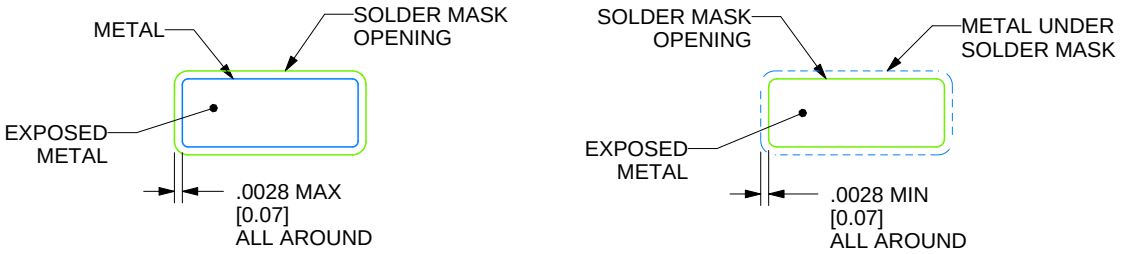

SOLDER MASK DETAILS

4214825/C 02/2019

NOTES: (continued)

6. Publication IPC-7351 may have alternate designs.
7. Solder mask tolerances between and around signal pads can vary based on board fabrication site.

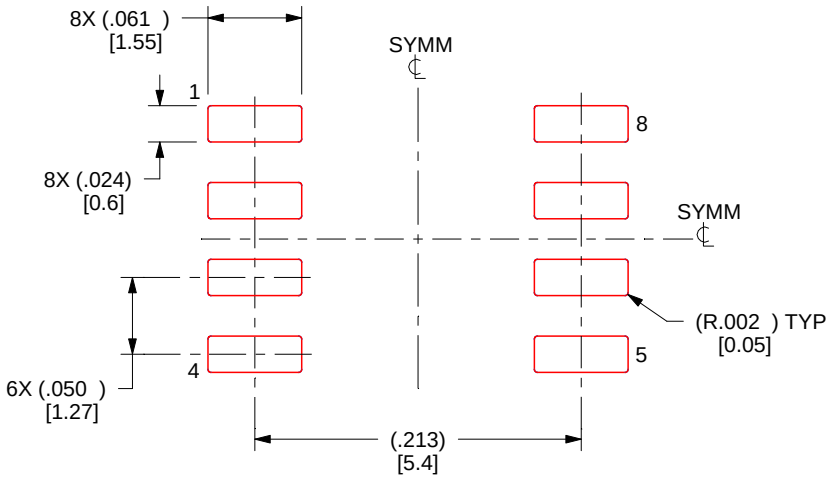

SOLDER PASTE EXAMPLE
BASED ON .005 INCH [0.125 MM] THICK STENCIL
SCALE:8X

4214825/C 02/2019

NOTES: (continued)

8. Laser cutting apertures with trapezoidal walls and rounded corners may offer better paste release. IPC-7525 may have alternate design recommendations.
9. Board assembly site may have different recommendations for stencil design.

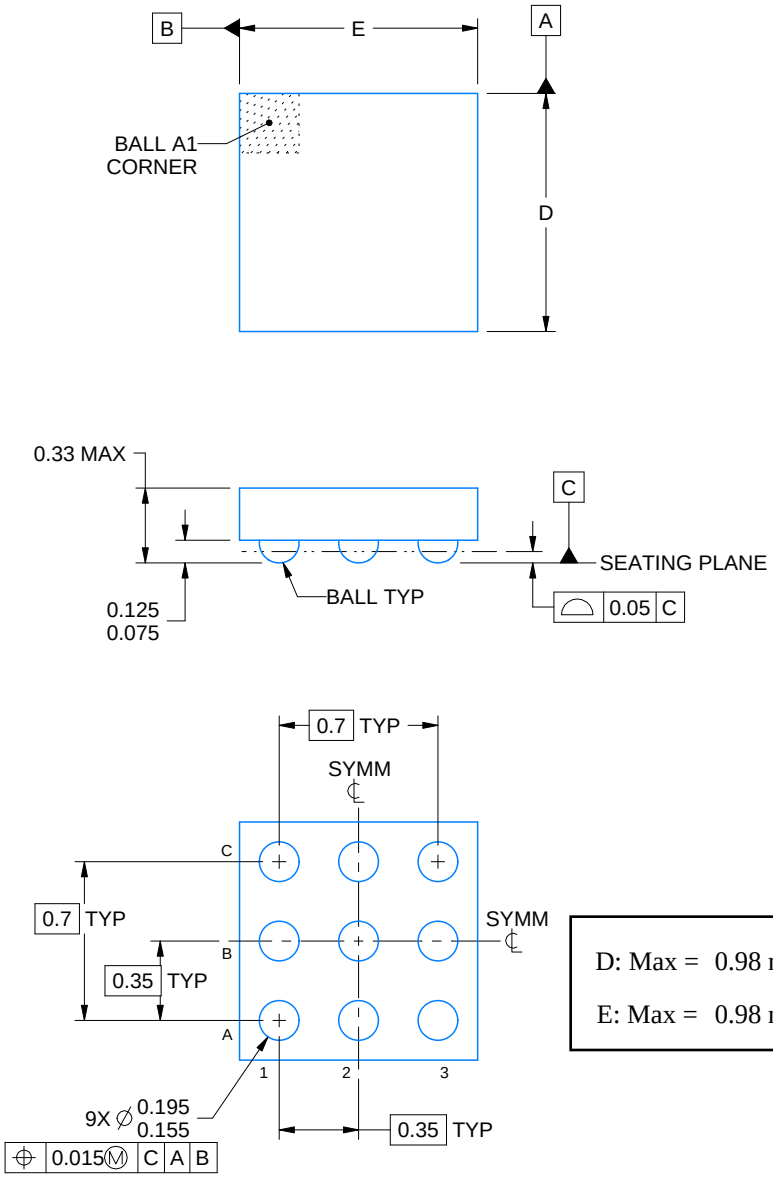

D: Max = 0.98 mm, Min = 0.92 mm

E: Max = 0.98 mm, Min = 0.92 mm

4225837/A 04/2020

NOTES:

1. All linear dimensions are in millimeters. Any dimensions in parenthesis are for reference only. Dimensioning and tolerancing per ASME Y14.5M.
2. This drawing is subject to change without notice.

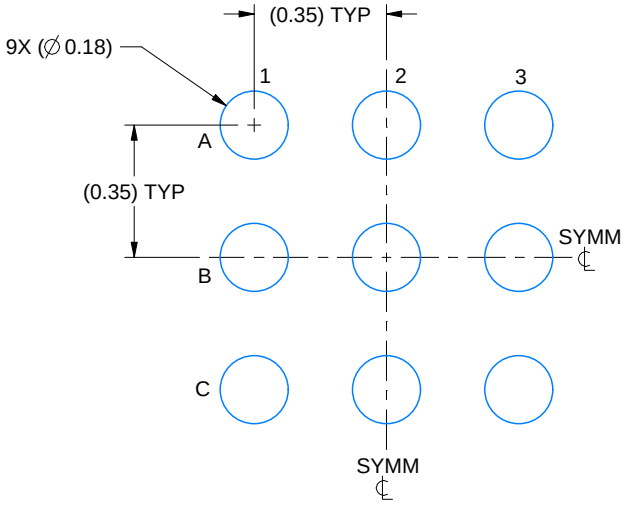

LAND PATTERN EXAMPLE
EXPOSED METAL SHOWN
SCALE: 50X

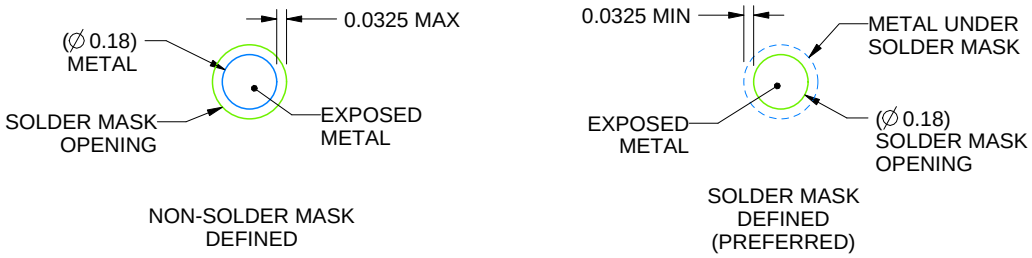

SOLDER MASK DETAILS
NOT TO SCALE

4225837/A 04/2020

NOTES: (continued)

3. Final dimensions may vary due to manufacturing tolerance considerations and also routing constraints.
   See Texas Instruments Literature No. SNVA009 (www.ti.com/lit/snva009).

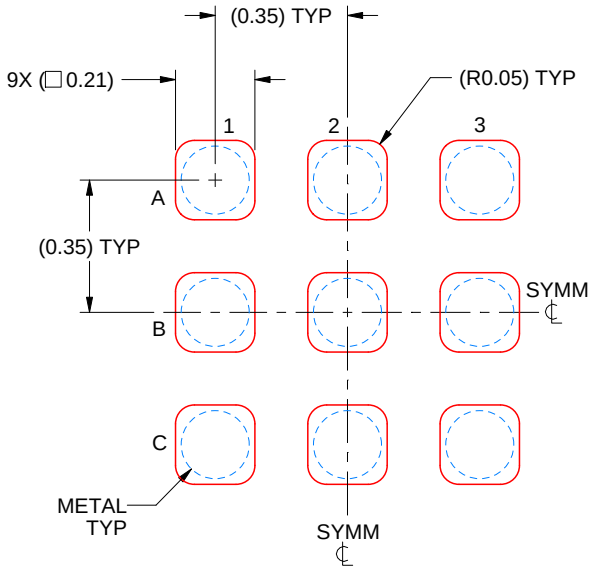

SOLDER PASTE EXAMPLE
BASED ON 0.075 mm THICK STENCIL
SCALE: 50X

4225837/A 04/2020

NOTES: (continued)

4. Laser cutting apertures with trapezoidal walls and rounded corners may offer better paste release.

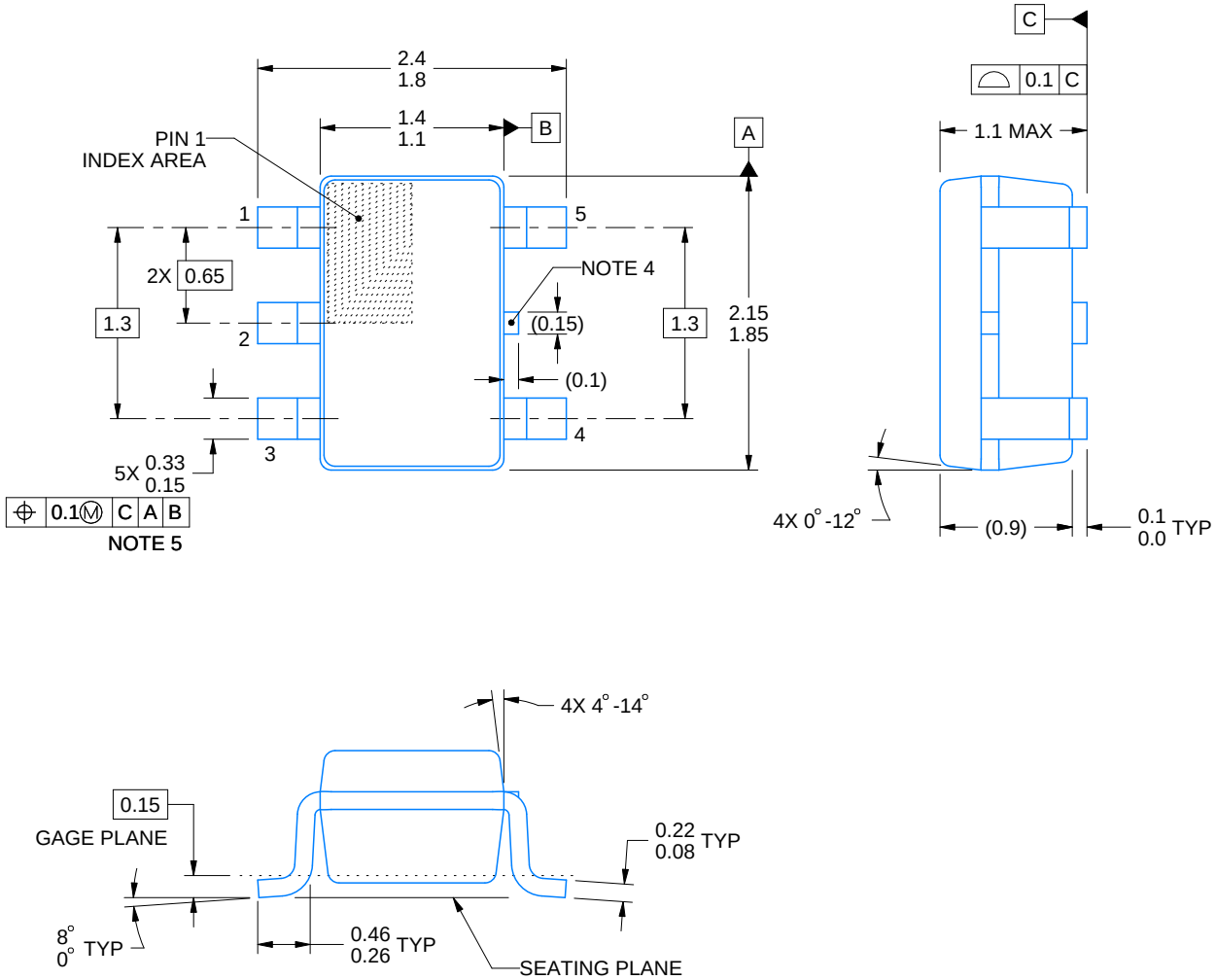

4214834/F 08/2024

NOTES:

1. All linear dimensions are in millimeters. Any dimensions in parenthesis are for reference only. Dimensioning and tolerancing per ASME Y14.5M.
2. This drawing is subject to change without notice.
3. Refernce JEDEC MO-203.
4. Support pin may differ or may not be present.
5. Lead width does not comply with JEDEC.
6. Body dimensions do not include mold flash, protrusions, or gate burrs. Mold flash, protrusions, or gate burrs shall not exceed 0.25mm per side

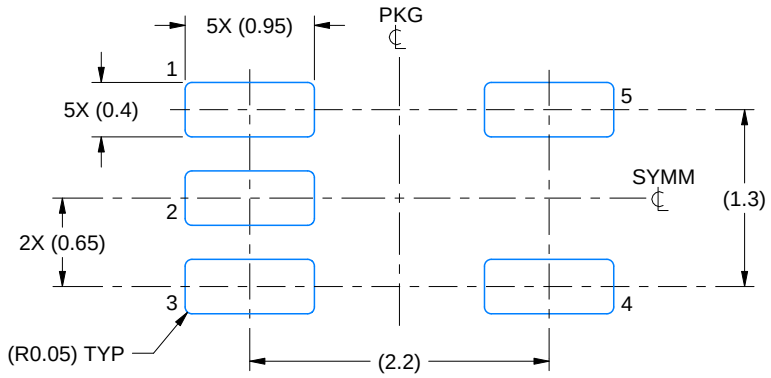

LAND PATTERN EXAMPLE
EXPOSED METAL SHOWN
SCALE:18X

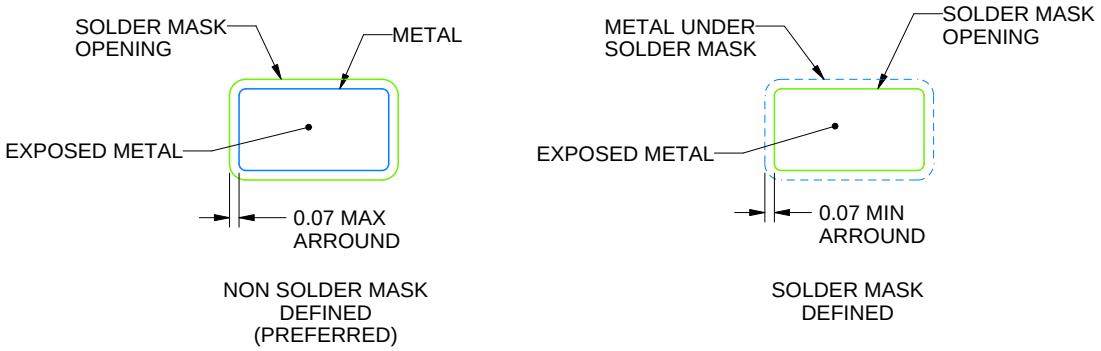

SOLDER MASK DETAILS

4214834/F 08/2024

NOTES: (continued)

7. Publication IPC-7351 may have alternate designs.
8. Solder mask tolerances between and around signal pads can vary based on board fabrication site.

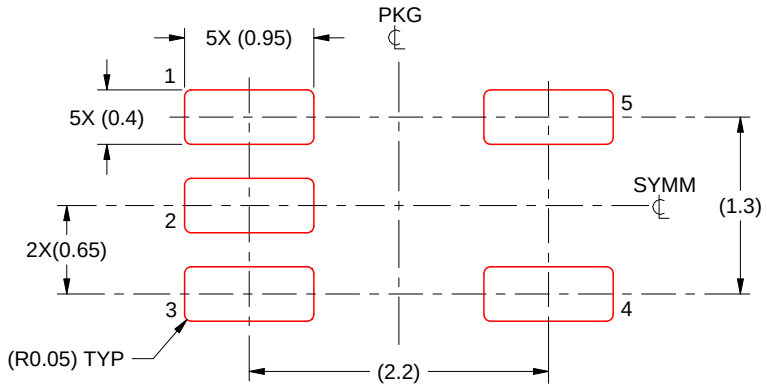

SOLDER PASTE EXAMPLE
BASED ON 0.125 THICK STENCIL
SCALE:18X

4214834/F 08/2024

NOTES: (continued)

9. Laser cutting apertures with trapezoidal walls and rounded corners may offer better paste release. IPC-7525 may have alternate design recommendations.
10. Board assembly site may have different recommendations for stencil design.

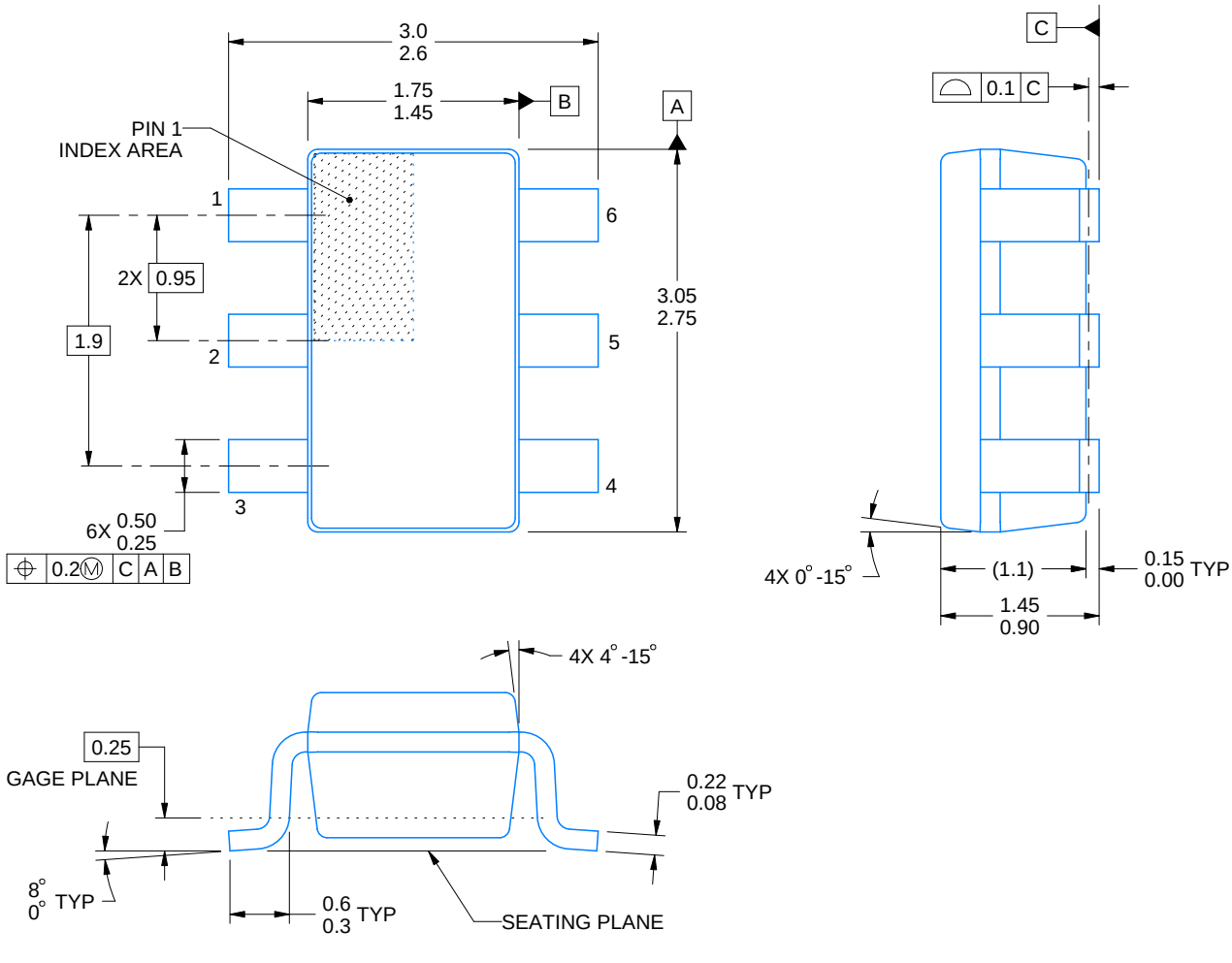

4214840/G 08/2024

NOTES:

1. All linear dimensions are in millimeters. Any dimensions in parenthesis are for reference only. Dimensioning and tolerancing per ASME Y14.5M.
2. This drawing is subject to change without notice.
3. Body dimensions do not include mold flash or protrusion. Mold flash and protrusion shall not exceed 0.25 per side.
4. Leads 1,2,3 may be wider than leads 4,5,6 for package orientation.
5. Refernce JEDEC MO-178.

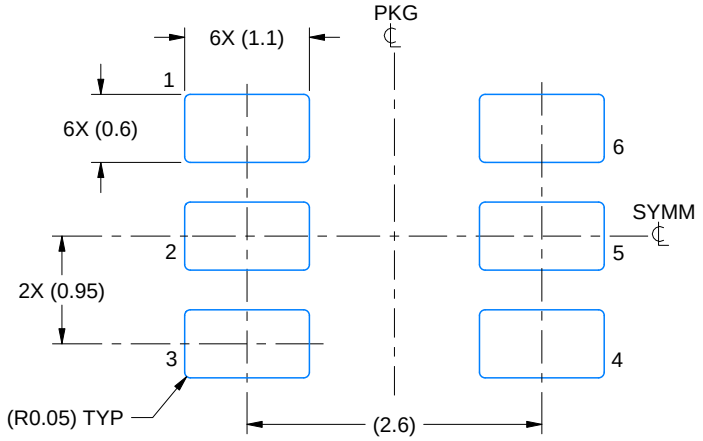

LAND PATTERN EXAMPLE
EXPOSED METAL SHOWN
SCALE:15X

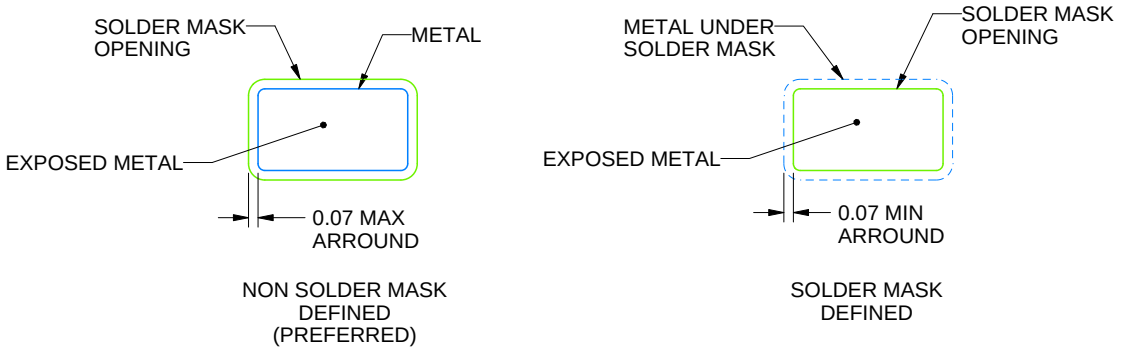

SOLDER MASK DETAILS

4214840/G 08/2024

NOTES: (continued)

6. Publication IPC-7351 may have alternate designs.
7. Solder mask tolerances between and around signal pads can vary based on board fabrication site.

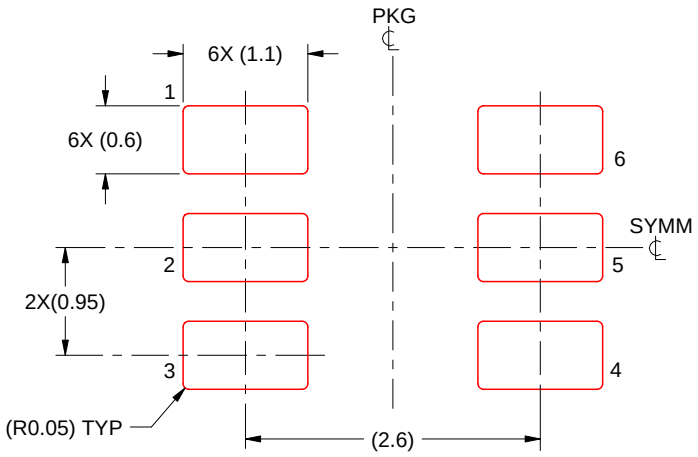

SOLDER PASTE EXAMPLE
BASED ON 0.125 mm THICK STENCIL
SCALE:15X

4214840/G 08/2024

NOTES: (continued)

8. Laser cutting apertures with trapezoidal walls and rounded corners may offer better paste release. IPC-7525 may have alternate design recommendations.
9. Board assembly site may have different recommendations for stencil design.

GENERIC PACKAGE VIEW

DSG 8

WSON - 0.8 mm max height

2 x 2, 0.5 mm pitch

PLASTIC SMALL OUTLINE - NO LEAD

This image is a representation of the package family, actual package may vary.
Refer to the product data sheet for package details.

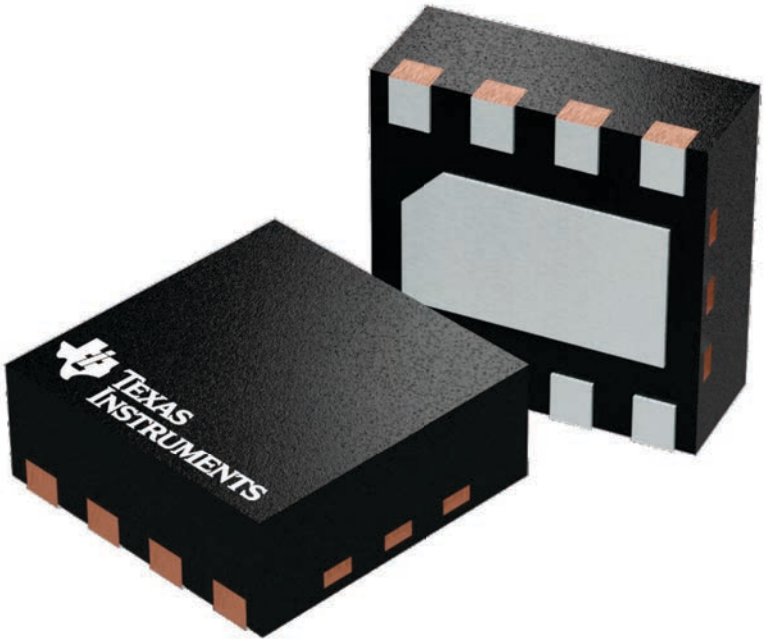

4224783/A

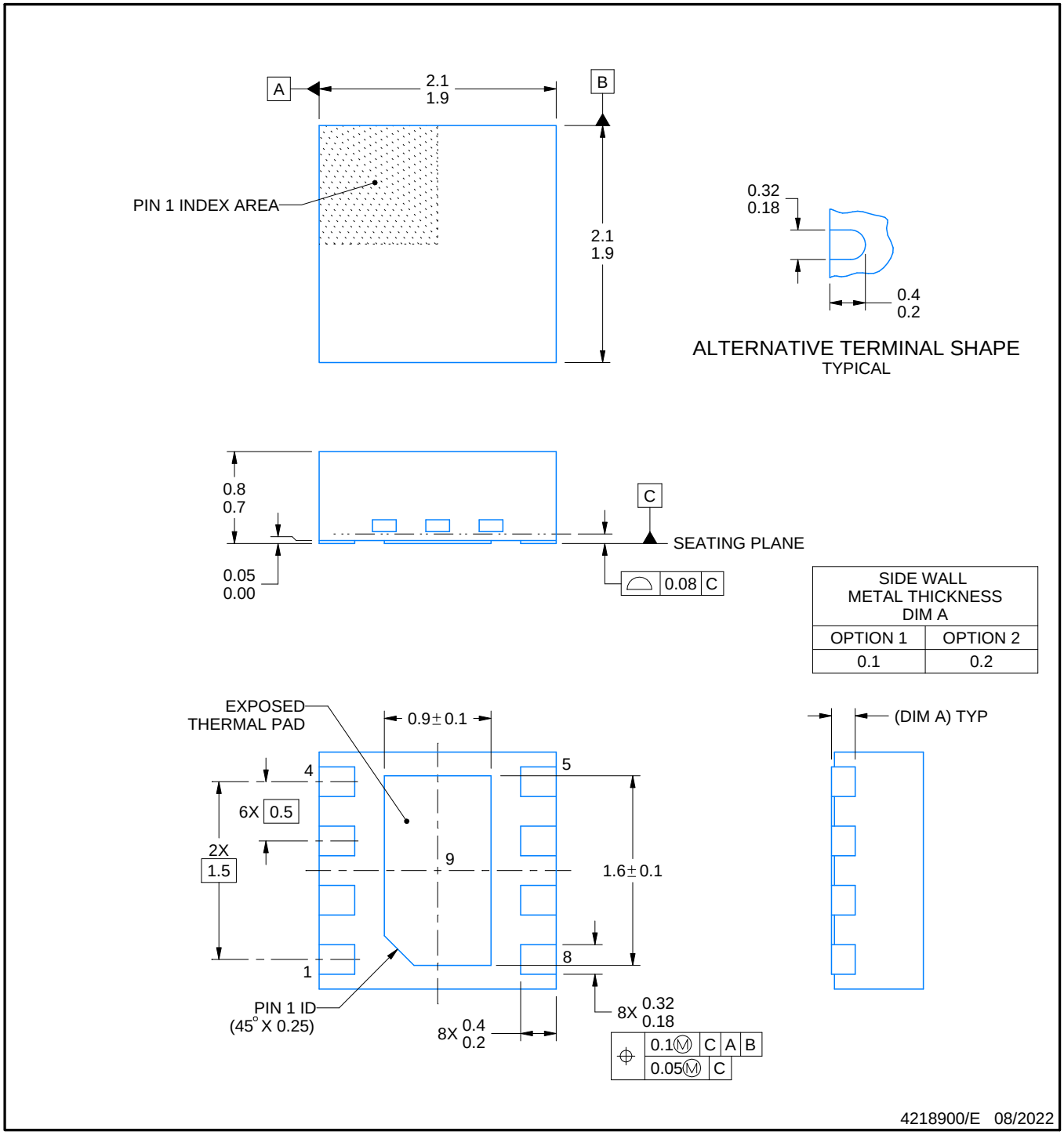

NOTES:

1. All linear dimensions are in millimeters. Any dimensions in parenthesis are for reference only. Dimensioning and tolerancing per ASME Y14.5M.
2. This drawing is subject to change without notice.
3. The package thermal pad must be soldered to the printed circuit board for thermal and mechanical performance.

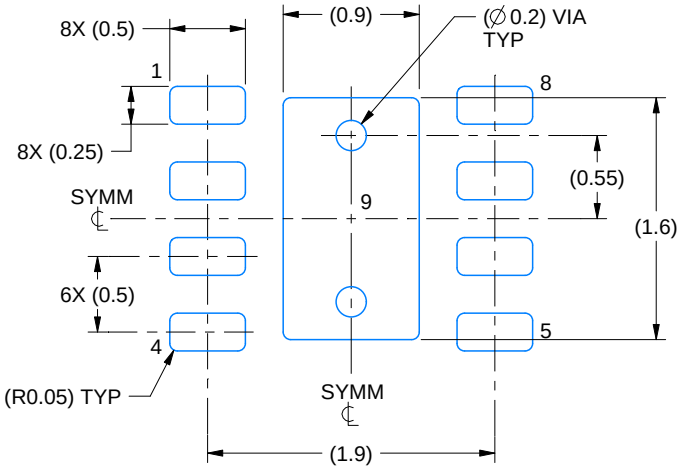

LAND PATTERN EXAMPLE
SCALE:20X

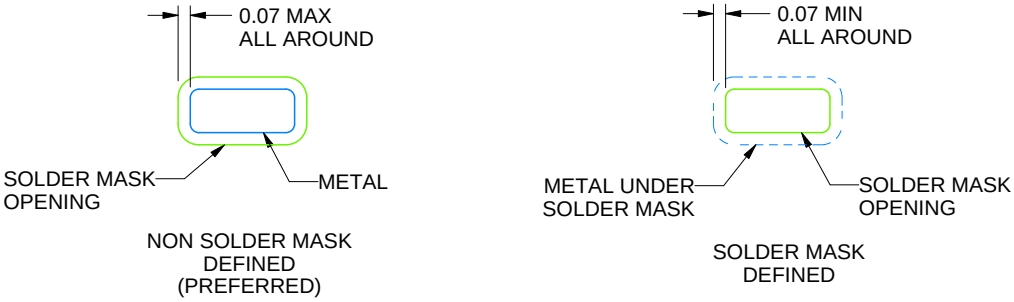

SOLDER MASK DETAILS

4218900/E 08/2022

NOTES: (continued)

4. This package is designed to be soldered to a thermal pad on the board. For more information, see Texas Instruments literature number SLUA271 (www.ti.com/lit/slua271).
5. Vias are optional depending on application, refer to device data sheet. If any vias are implemented, refer to their locations shown on this view. It is recommended that vias under paste be filled, plugged or tented.

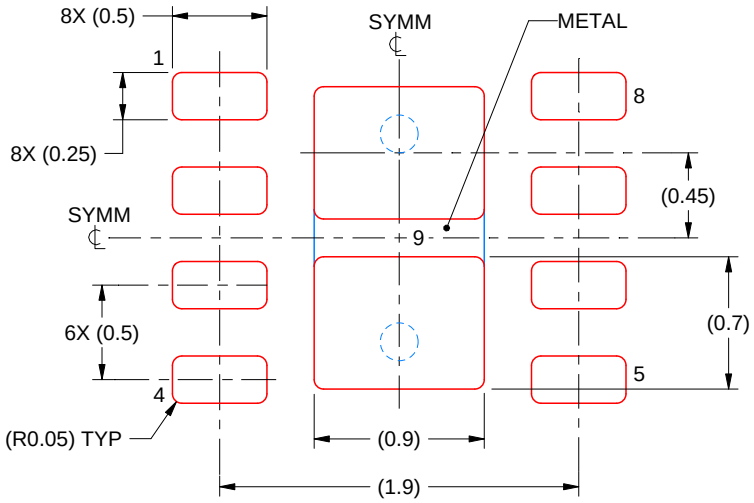

SOLDER PASTE EXAMPLE
BASED ON 0.125 mm THICK STENCIL

EXPOSED PAD 9:
87% PRINTED SOLDER COVERAGE BY AREA UNDER PACKAGE
SCALE:25X

4218900/E 08/2022

NOTES: (continued)

6. Laser cutting apertures with trapezoidal walls and rounded corners may offer better paste release. IPC-7525 may have alternate design recommendations.

PW0014A

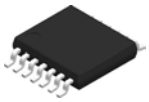

PACKAGE OUTLINE

TSSOP - 1.2 mm max height

SMALL OUTLINE PACKAGE

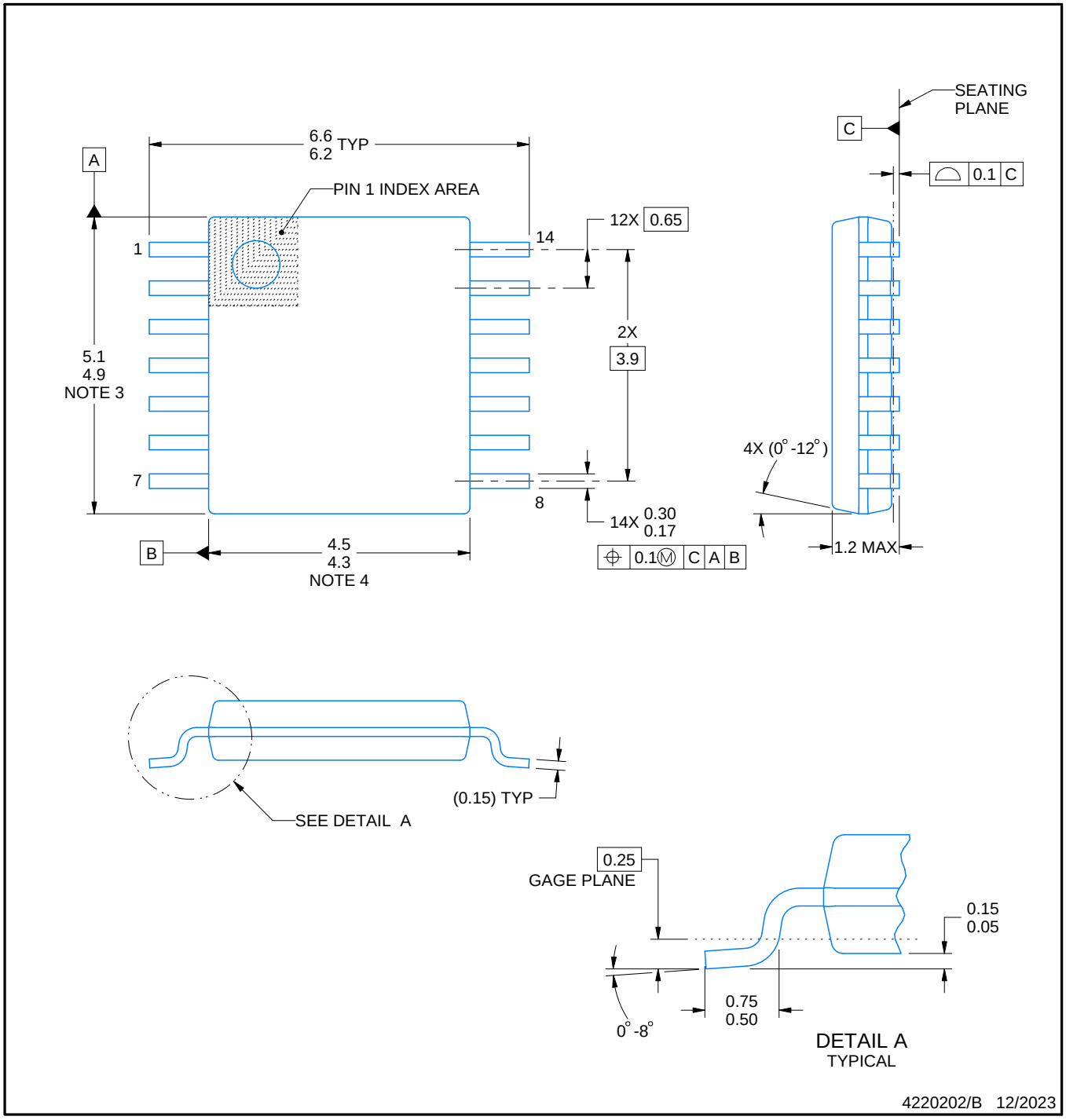

NOTES:

1. All linear dimensions are in millimeters. Any dimensions in parenthesis are for reference only. Dimensioning and tolerancing per ASME Y14.5M.
2. This drawing is subject to change without notice.
3. This dimension does not include mold flash, protrusions, or gate burrs. Mold flash, protrusions, or gate burrs shall not exceed 0.15 mm per side.
4. This dimension does not include interlead flash. Interlead flash shall not exceed 0.25 mm per side.
5. Reference JEDEC registration MO-153.

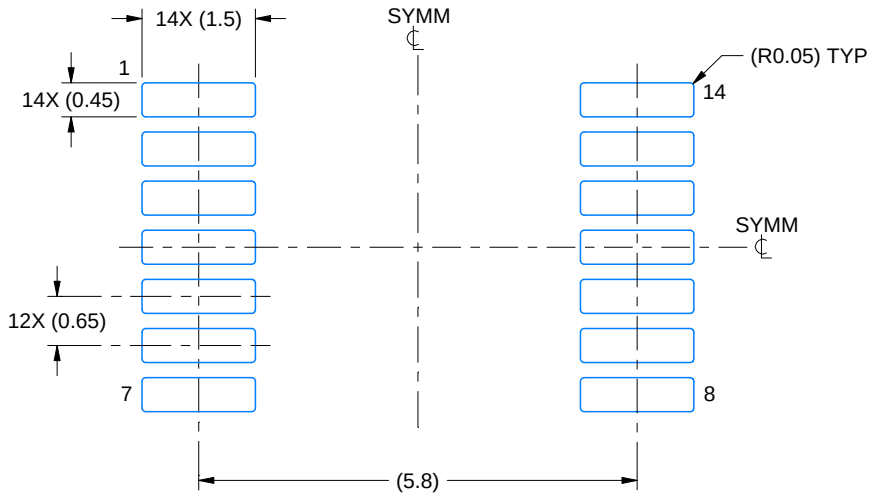

LAND PATTERN EXAMPLE
EXPOSED METAL SHOWN
SCALE: 10X

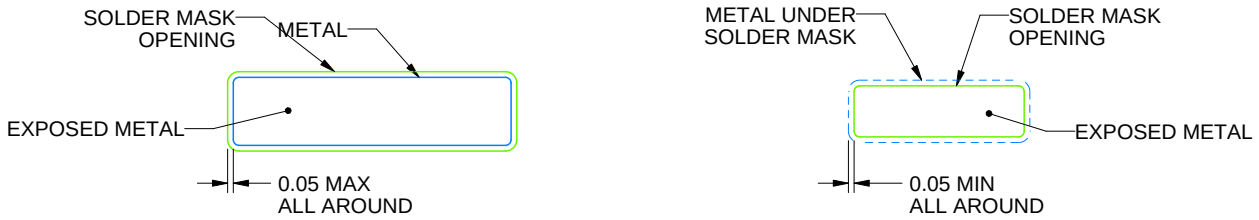

NON-SOLDER MASK DEFINED (PREFERRED)

SOLDER MASK DEFINED

SOLDER MASK DETAILS

4220202/B 12/2023

NOTES: (continued)

6. Publication IPC-7351 may have alternate designs.
7. Solder mask tolerances between and around signal pads can vary based on board fabrication site.

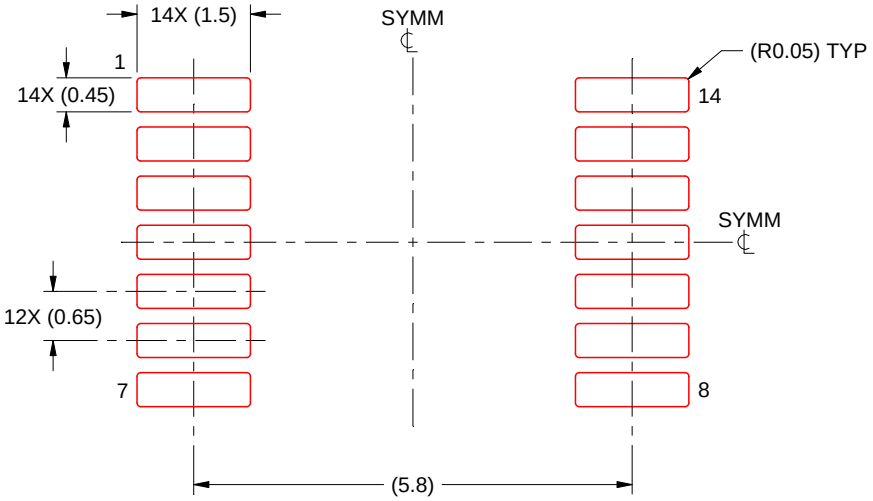

SOLDER PASTE EXAMPLE
BASED ON 0.125 mm THICK STENCIL
SCALE: 10X

4220202/B 12/2023

NOTES: (continued)

8. Laser cutting apertures with trapezoidal walls and rounded corners may offer better paste release. IPC-7525 may have alternate design recommendations.
9. Board assembly site may have different recommendations for stencil design.

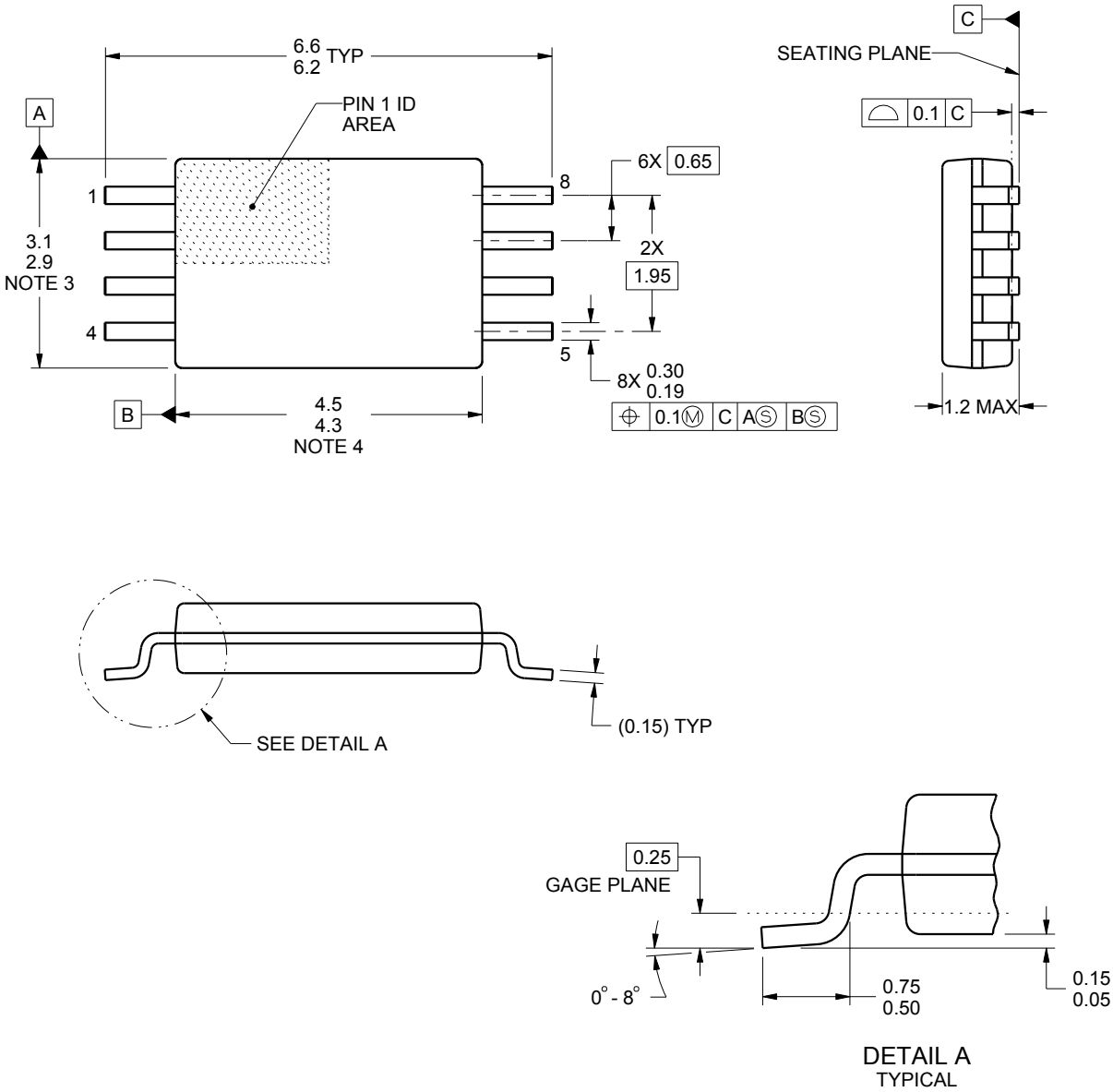

NOTES:

1. All linear dimensions are in millimeters. Any dimensions in parenthesis are for reference only. Dimensioning and tolerancing per ASME Y14.5M.
2. This drawing is subject to change without notice.
3. This dimension does not include mold flash, protrusions, or gate burrs. Mold flash, protrusions, or gate burrs shall not exceed 0.15 mm per side.
4. This dimension does not include interlead flash. Interlead flash shall not exceed 0.25 mm per side.
5. Reference JEDEC registration MO-153, variation AA.

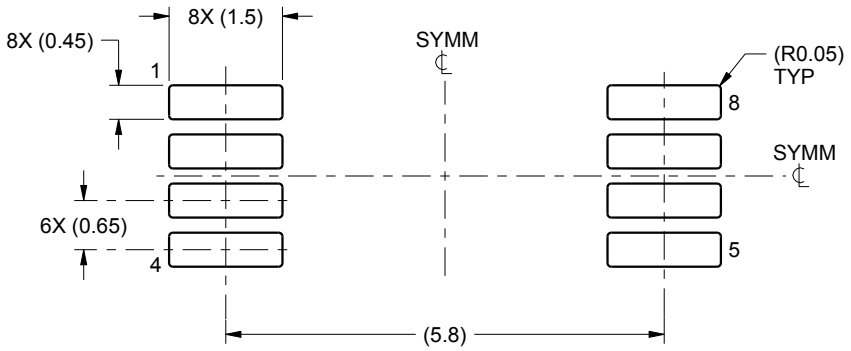

LAND PATTERN EXAMPLE
SCALE:10X

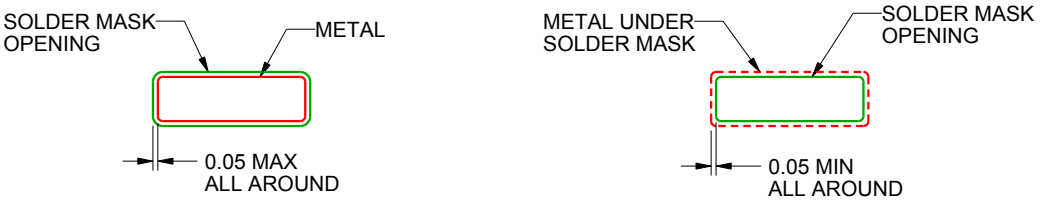

NON SOLDER MASK
DEFINED

SOLDER MASK
DEFINED

SOLDER MASK DETAILS
NOT TO SCALE

4221848/A 02/2015

NOTES: (continued)

6. Publication IPC-7351 may have alternate designs.
7. Solder mask tolerances between and around signal pads can vary based on board fabrication site.

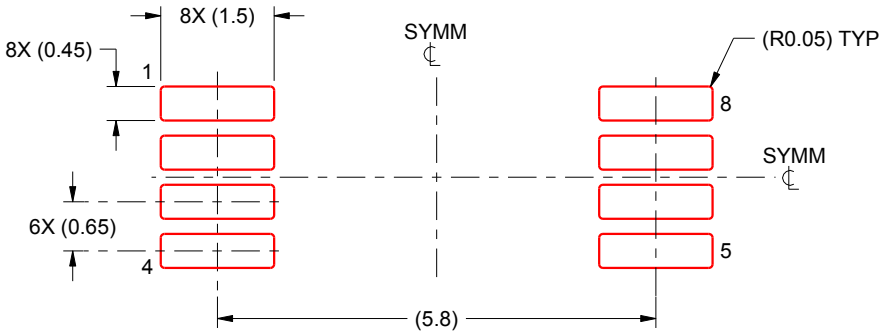

SOLDER PASTE EXAMPLE
BASED ON 0.125 mm THICK STENCIL
SCALE:10X

4221848/A 02/2015

NOTES: (continued)

8. Laser cutting apertures with trapezoidal walls and rounded corners may offer better paste release. IPC-7525 may have alternate design recommendations.
9. Board assembly site may have different recommendations for stencil design.

GENERIC PACKAGE VIEW

RUC 14

X2QFN - 0.4 mm max height

2 x 2, 0.4 mm pitch

PLASTIC QUAD FLATPACK - NO LEAD

This image is a representation of the package family, actual package may vary.
Refer to the product data sheet for package details.

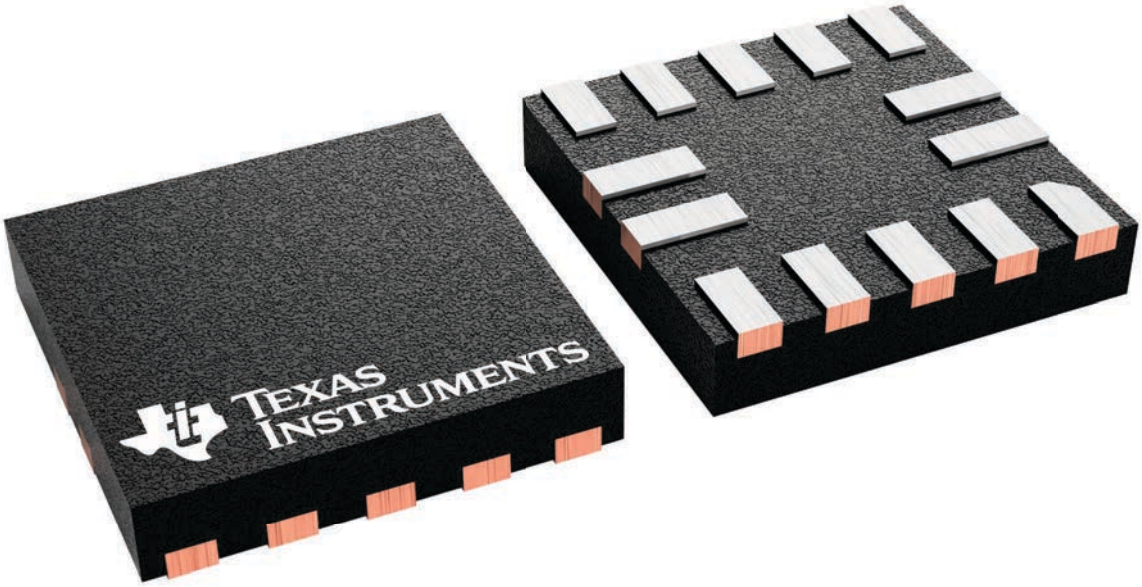

4229871/A

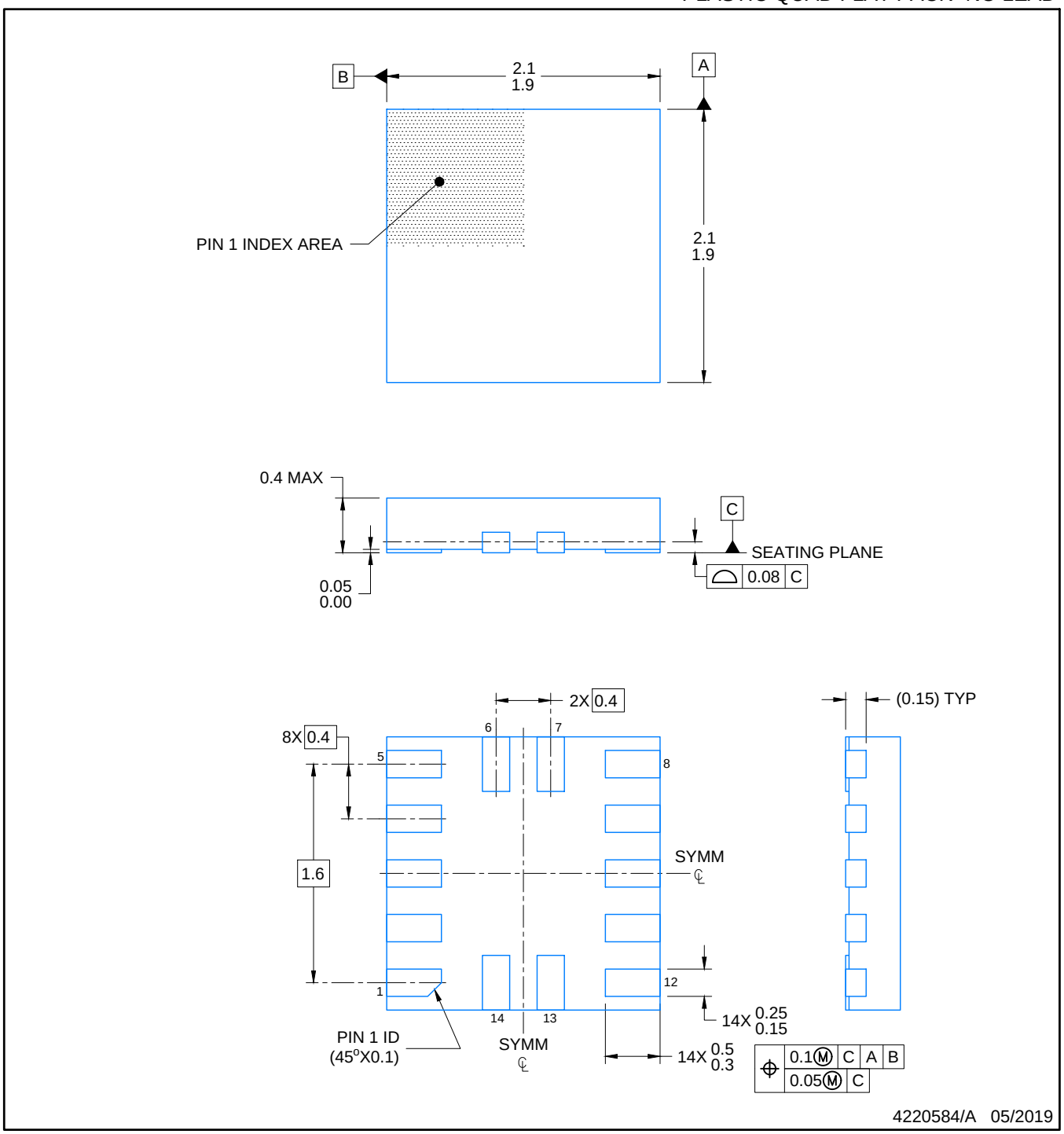

NOTES:

1. All linear dimensions are in millimeters. Any dimensions in parenthesis are for reference only. Dimensioning and tolerancing per ASME Y14.5M.
2. This drawing is subject to change without notice.

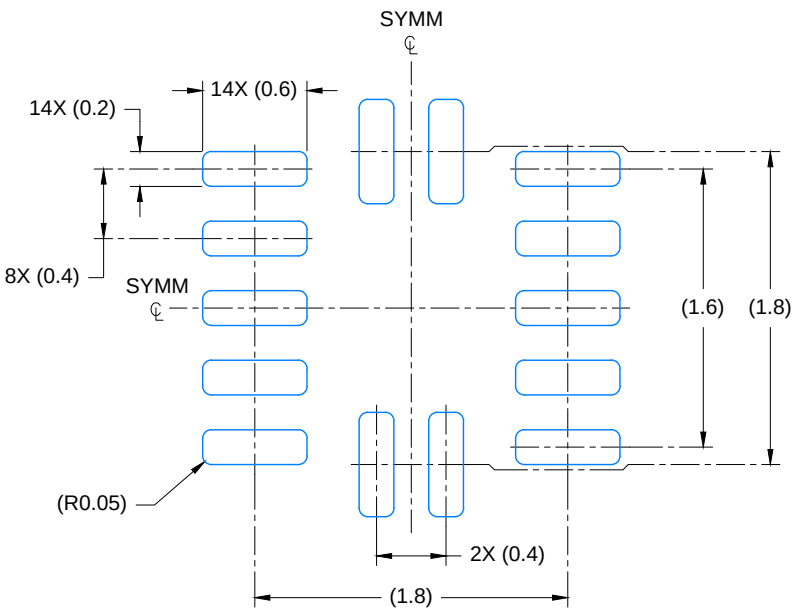

LAND PATTERN EXAMPLE
EXPOSED METAL SHOWN
SCALE: 23X

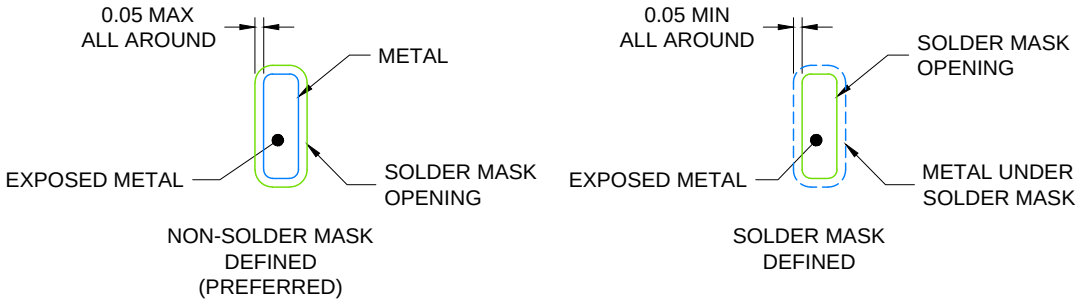

SOLDER MASK DETAILS

4220584/A 05/2019

NOTES: (continued)

3. For more information, see Texas Instruments literature number SLUA271 (www.ti.com/lit/slua271).

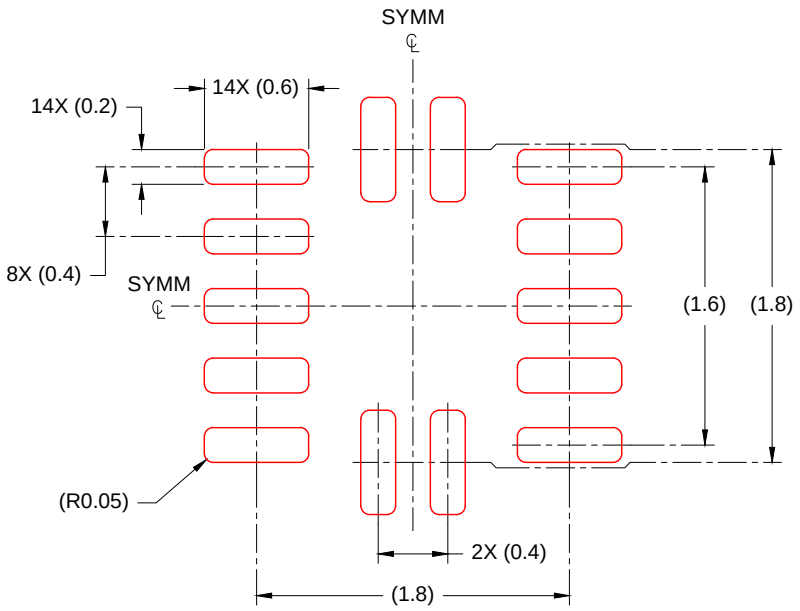

SOLDER PASTE EXAMPLE
BASED ON 0.100mm THICK STENCIL
SCALE: 23X

4220584/A 05/2019

NOTES: (continued)

4. Laser cutting apertures with trapezoidal walls and rounded corners may offer better paste release. IPC-7525 may have alternate design recommendations.

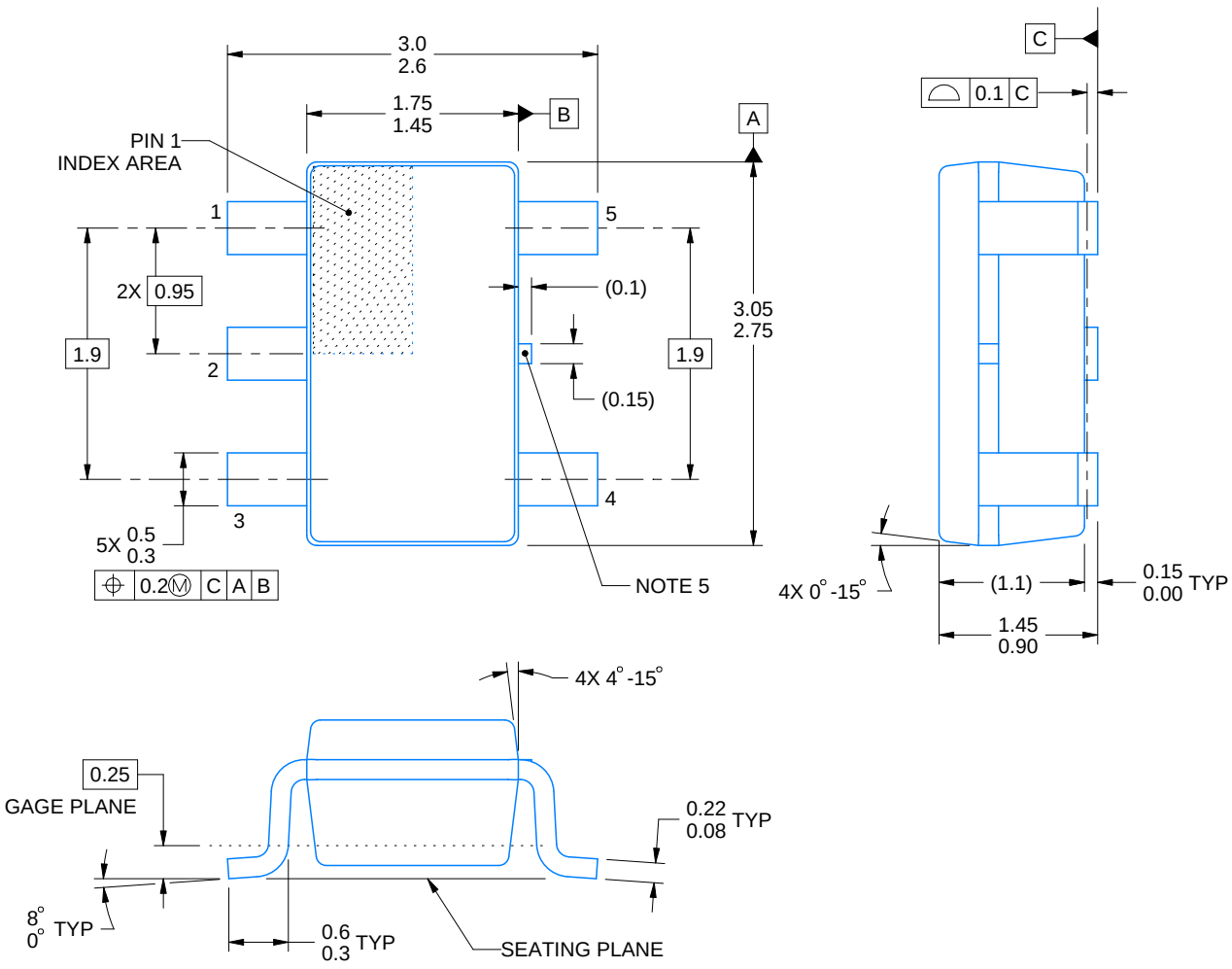

4214839/K 08/2024

NOTES:

1. All linear dimensions are in millimeters. Any dimensions in parenthesis are for reference only. Dimensioning and tolerancing per ASME Y14.5M.
2. This drawing is subject to change without notice.
3. Refernce JEDEC MO-178.
4. Body dimensions do not include mold flash, protrusions, or gate burrs. Mold flash, protrusions, or gate burrs shall not exceed 0.25 mm per side.
5. Support pin may differ or may not be present.

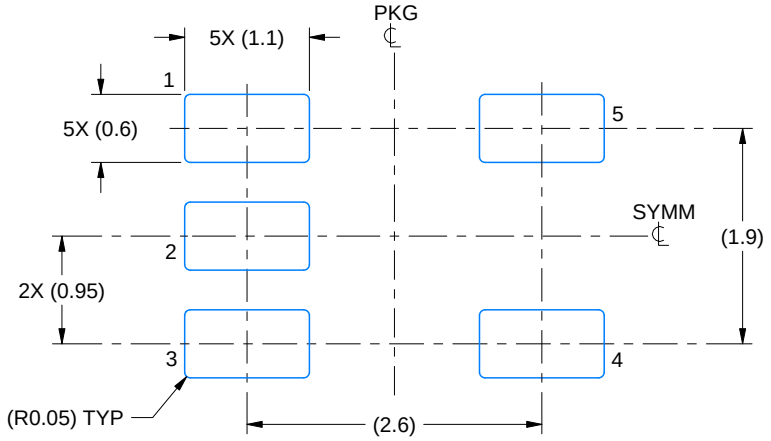

LAND PATTERN EXAMPLE
EXPOSED METAL SHOWN
SCALE:15X

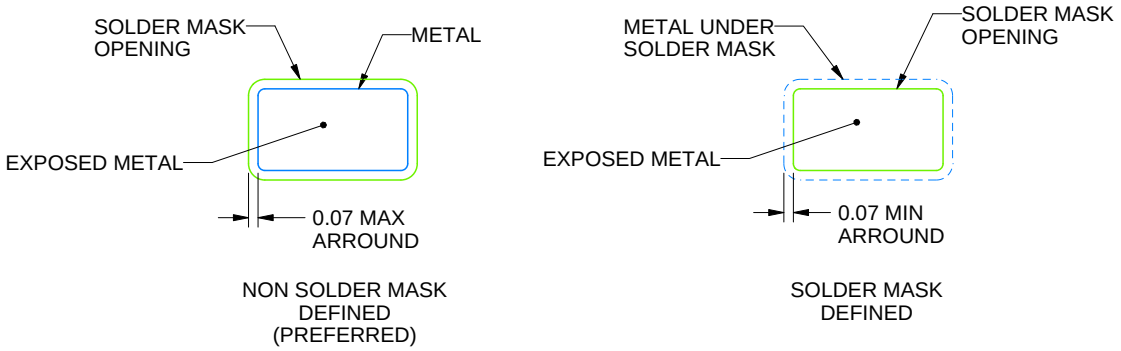

SOLDER MASK DETAILS

4214839/K 08/2024

NOTES: (continued)

6. Publication IPC-7351 may have alternate designs.
7. Solder mask tolerances between and around signal pads can vary based on board fabrication site.

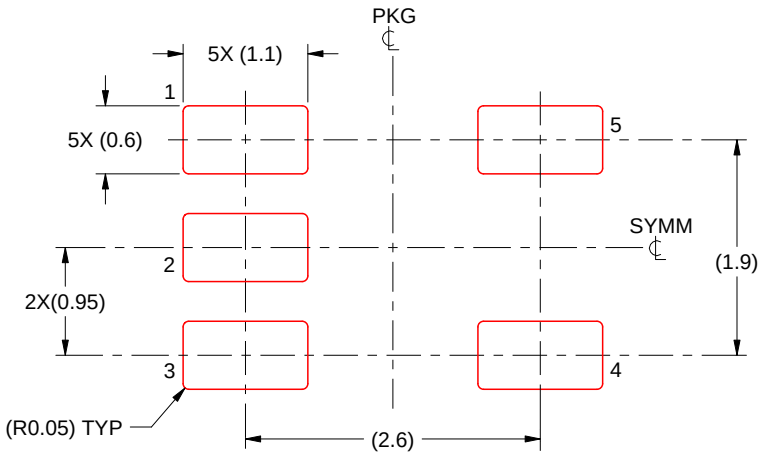

SOLDER PASTE EXAMPLE
BASED ON 0.125 mm THICK STENCIL
SCALE:15X

4214839/K 08/2024

NOTES: (continued)

8. Laser cutting apertures with trapezoidal walls and rounded corners may offer better paste release. IPC-7525 may have alternate design recommendations.
9. Board assembly site may have different recommendations for stencil design.

PACKAGE OUTLINE

DGK0008A

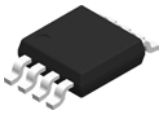

VSSOP - 1.1 mm max height

SMALL OUTLINE PACKAGE

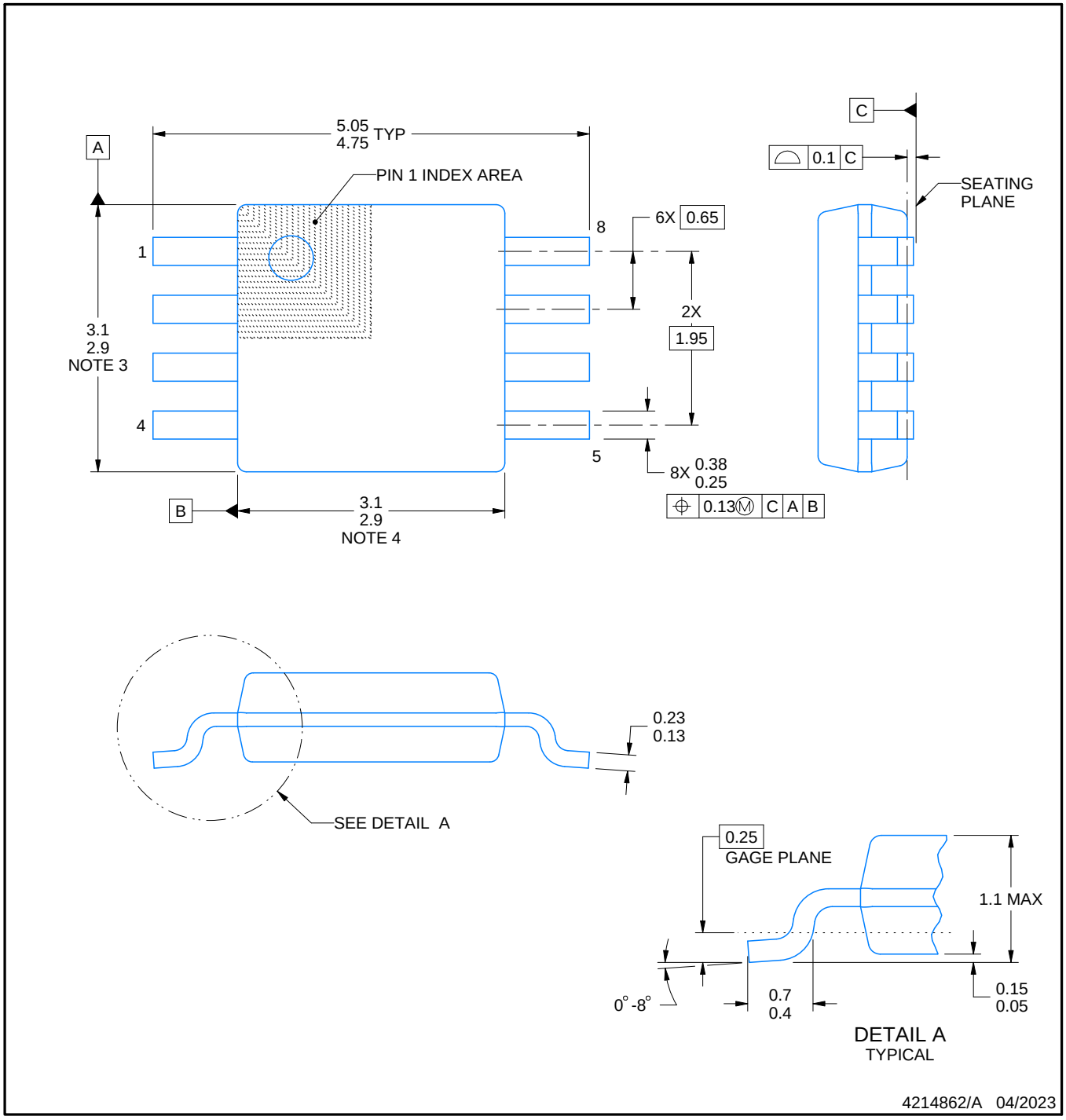

PowerPAD is a trademark of Texas Instruments.

NOTES:

1. All linear dimensions are in millimeters. Any dimensions in parenthesis are for reference only. Dimensioning and tolerancing per ASME Y14.5M.
2. This drawing is subject to change without notice.
3. This dimension does not include mold flash, protrusions, or gate burrs. Mold flash, protrusions, or gate burrs shall not exceed 0.15 mm per side.
4. This dimension does not include interlead flash. Interlead flash shall not exceed 0.25 mm per side.
5. Reference JEDEC registration MO-187.

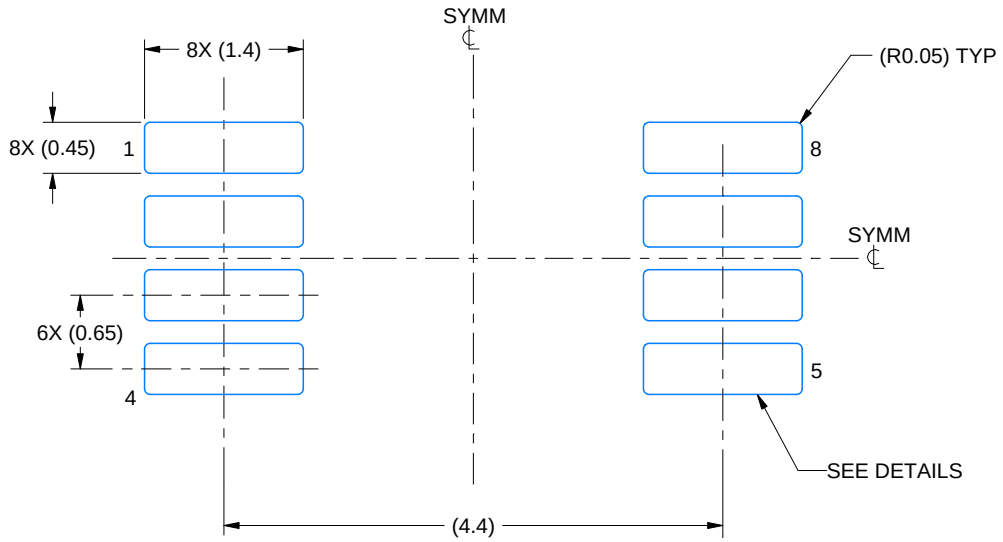

LAND PATTERN EXAMPLE
EXPOSED METAL SHOWN
SCALE: 15X

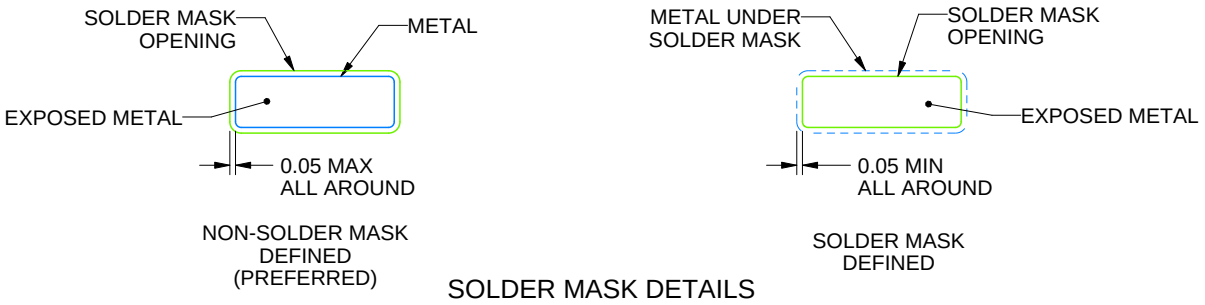

SOLDER MASK DETAILS

4214862/A 04/2023

NOTES: (continued)

6. Publication IPC-7351 may have alternate designs.
7. Solder mask tolerances between and around signal pads can vary based on board fabrication site.
8. Vias are optional depending on application, refer to device data sheet. If any vias are implemented, refer to their locations shown on this view. It is recommended that vias under paste be filled, plugged or tented.
9. Size of metal pad may vary due to creepage requirement.

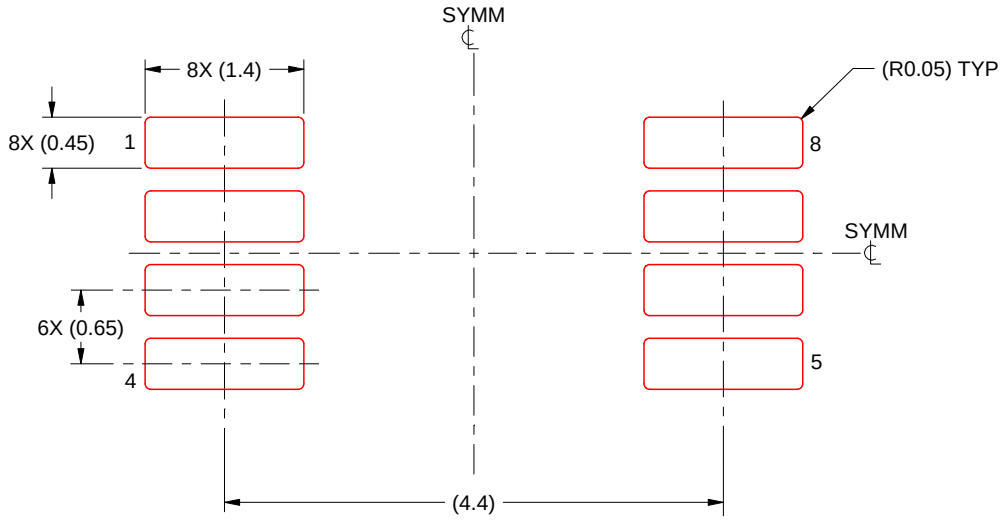

SOLDER PASTE EXAMPLE
SCALE: 15X

4214862/A 04/2023

NOTES: (continued)

11. Laser cutting apertures with trapezoidal walls and rounded corners may offer better paste release. IPC-7525 may have alternate design recommendations.
12. Board assembly site may have different recommendations for stencil design.

GENERIC PACKAGE VIEW

RTE 16

WQFN - 0.8 mm max height

3 x 3, 0.5 mm pitch

PLASTIC QUAD FLATPACK - NO LEAD

This image is a representation of the package family, actual package may vary.
Refer to the product data sheet for package details.

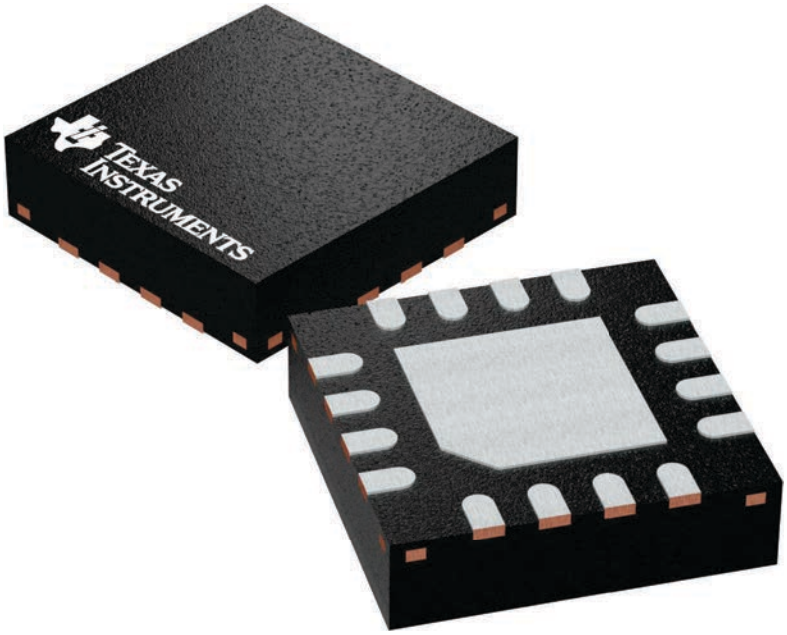

4225944/A

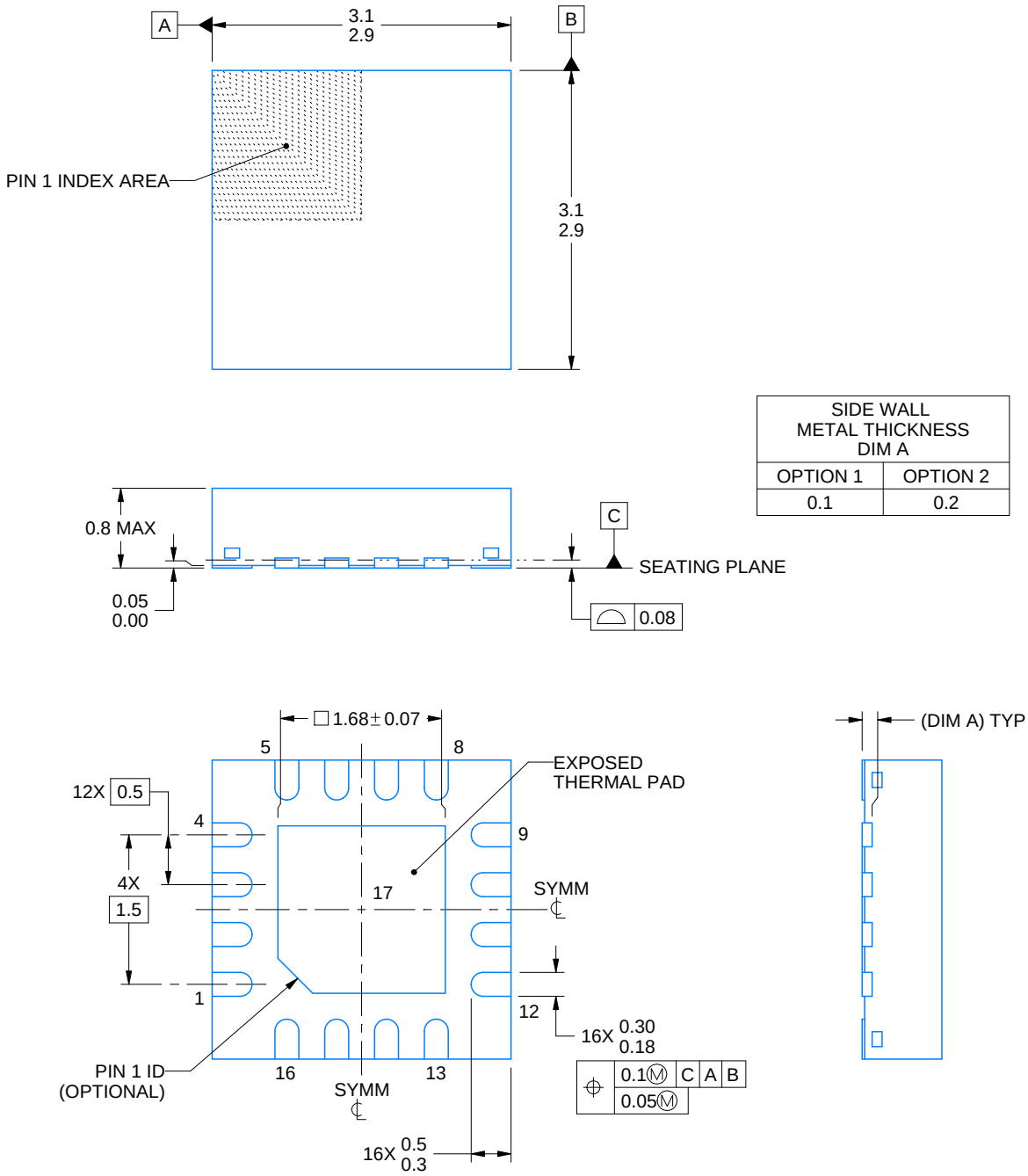

SIDE WALL METAL THICKNESS DIM A	
OPTION 1	OPTION 2
0.1	0.2

NOTES:

1. All linear dimensions are in millimeters. Any dimensions in parenthesis are for reference only. Dimensioning and tolerancing per ASME Y14.5M.
2. This drawing is subject to change without notice.
3. The package thermal pad must be soldered to the printed circuit board for thermal and mechanical performance.

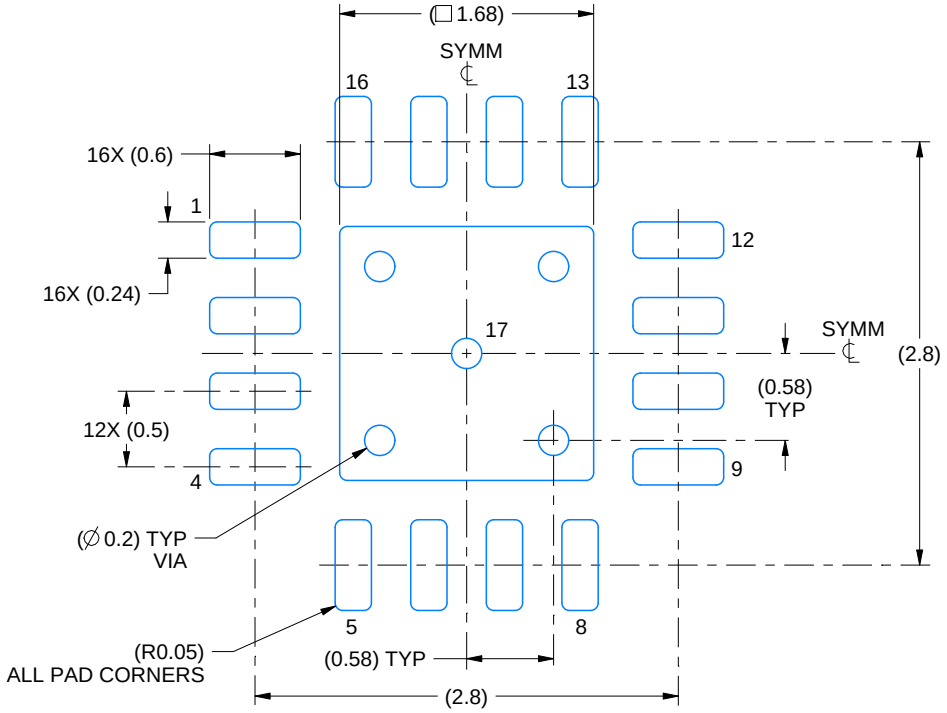

LAND PATTERN EXAMPLE
EXPOSED METAL SHOWN
SCALE:20X

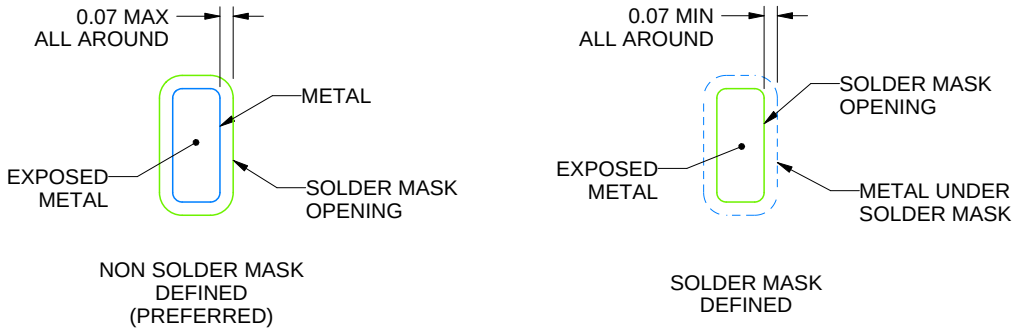

SOLDER MASK DETAILS

4219117/B 04/2022

NOTES: (continued)

4. This package is designed to be soldered to a thermal pad on the board. For more information, see Texas Instruments literature number SLUA271 (www.ti.com/lit/slua271).
5. Vias are optional depending on application, refer to device data sheet. If any vias are implemented, refer to their locations shown on this view. It is recommended that vias under paste be filled, plugged or tented.

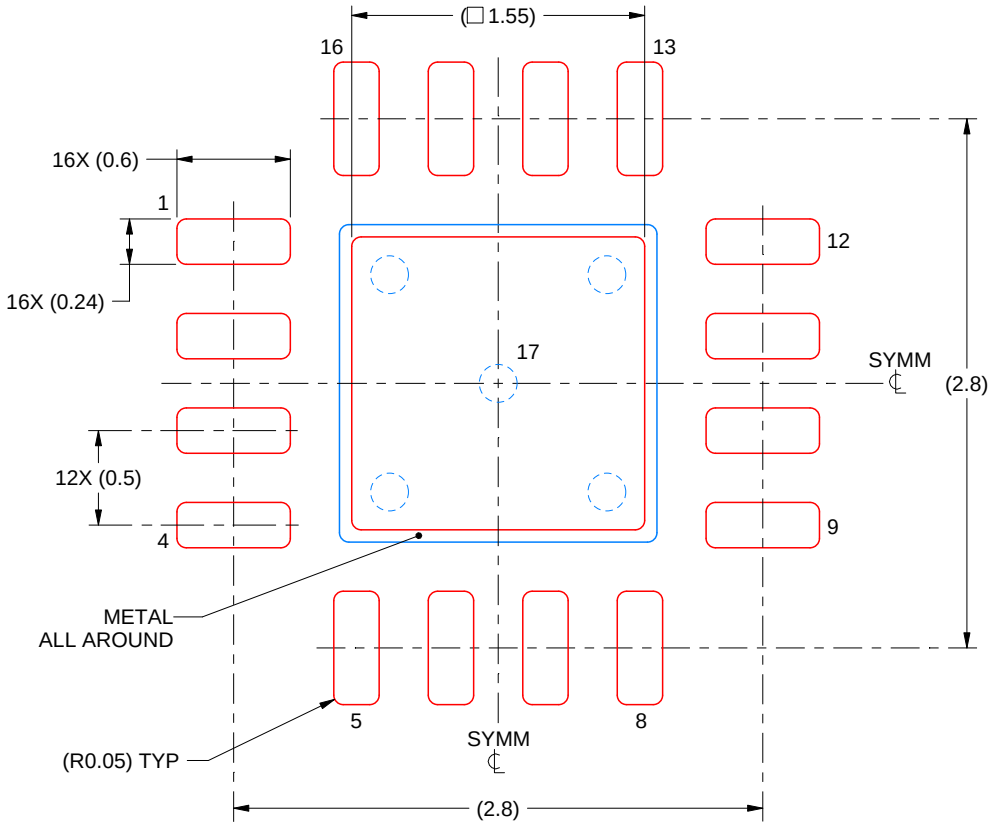

SOLDER PASTE EXAMPLE
BASED ON 0.125 mm THICK STENCIL

EXPOSED PAD 17:
85% PRINTED SOLDER COVERAGE BY AREA UNDER PACKAGE
SCALE:25X

4219117/B 04/2022

NOTES: (continued)

6. Laser cutting apertures with trapezoidal walls and rounded corners may offer better paste release. IPC-7525 may have alternate design recommendations.

IMPORTANT NOTICE AND DISCLAIMER

TI PROVIDES TECHNICAL AND RELIABILITY DATA (INCLUDING DATA SHEETS), DESIGN RESOURCES (INCLUDING REFERENCE DESIGNS), APPLICATION OR OTHER DESIGN ADVICE, WEB TOOLS, SAFETY INFORMATION, AND OTHER RESOURCES “AS IS” AND WITH ALL FAULTS, AND DISCLAIMS ALL WARRANTIES, EXPRESS AND IMPLIED, INCLUDING WITHOUT LIMITATION ANY IMPLIED WARRANTIES OF MERCHANTABILITY, FITNESS FOR A PARTICULAR PURPOSE OR NON-INFRINGEMENT OF THIRD PARTY INTELLECTUAL PROPERTY RIGHTS.

These resources are intended for skilled developers designing with TI products. You are solely responsible for (1) selecting the appropriate TI products for your application, (2) designing, validating and testing your application, and (3) ensuring your application meets applicable standards, and any other safety, security, regulatory or other requirements.

These resources are subject to change without notice. TI grants you permission to use these resources only for development of an application that uses the TI products described in the resource. Other reproduction and display of these resources is prohibited. No license is granted to any other TI intellectual property right or to any third party intellectual property right. TI disclaims responsibility for, and you will fully indemnify TI and its representatives against, any claims, damages, costs, losses, and liabilities arising out of your use of these resources.

TI’s products are provided subject to TI’s Terms of Sale or other applicable terms available either on ti.com or provided in conjunction with such TI products. TI’s provision of these resources does not expand or otherwise alter TI’s applicable warranties or warranty disclaimers for TI products.

TI objects to and rejects any additional or different terms you may have proposed.

Mailing Address: Texas Instruments, Post Office Box 655303, Dallas, Texas 75265
Copyright © 2024, Texas Instruments Incorporated