TPS20xxB Current-Limited, Power-Distribution Switches

1 Features

- 70mΩ High-Side MOSFET
- 500mA Continuous Current
- Thermal and Short-Circuit Protection
- Accurate Current Limit (0.75A Minimum, 1.25A Maximum)
- Operating Range: 2.7V to 5.5V
- 0.6ms Typical Rise Time
- Undervoltage Lockout
- Deglitched Fault Report ($\overline{OC}$)
- No $\overline{OC}$ Glitch During Power Up
- Maximum Standby Supply Current: 1µA (Single, Dual) or 2µA (Triple, Quad)
- Ambient Temperature Range: –40°C to 85°C
- UL Recognized, File Number E169910
- Additional UL Recognition for TPS2042B and TPS2052B for Ganged Configuration

2 Applications

- Heavy Capacitive Loads
- Short-Circuit Protections

3 Description

The TPS20xxB power-distribution switches are intended for applications where heavy capacitive loads and short circuits are likely to be encountered. These devices incorporates 70mΩ N-channel MOSFET power switches for power-distribution systems that require multiple power switches in a single package. Each switch is controlled by a logic enable input. Gate drive is provided by an internal charge pump designed to control the power-switch rise times and fall times to minimize current surges during switching. The charge pump requires no external components and allows operation from supplies as low as 2.7V.

When the output load exceeds the current-limit threshold or a short is present, the device limits the output current to a safe level by switching into a constant-current mode, pulling the overcurrent ($\overline{OCx}$) logic output low. When continuous heavy overloads and short circuits increase the power dissipation in the switch, causing the junction temperature to rise, a thermal protection circuit shuts off the switch to prevent damage. Recovery from a thermal shutdown is automatic once the device has cooled sufficiently. Internal circuitry ensures that the switch remains off until valid input voltage is present. This power-distribution switch is designed to set current limit at 1A (typical).

Device Information

PART NUMBER	PACKAGE(1)	BODY SIZE (NOM)
TPS20xxB	SOIC (8)	4.90mm × 3.91mm
	SOIC (16)	9.90mm × 3.91mm
	SOT-23 (5)	2.90mm × 1.60mm
	HVSSOP (8)	3.00mm × 3.00mm
	SON (8)	3.00mm × 3.00mm

(1) For all available packages, see the orderable addendum at the end of the data sheet.

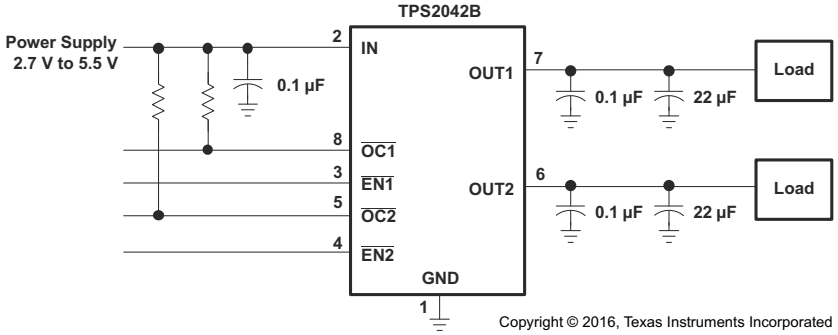

Typical Application Schematic

An IMPORTANT NOTICE at the end of this data sheet addresses availability, warranty, changes, use in safety-critical applications, intellectual property matters and other important disclaimers. PRODUCTION DATA.

Table of Contents

1 Features....1
2 Applications....1
3 Description....1
4 General Switch Catalog....3
5 Pin Configuration and Functions....3
6 Specifications....6
6.1 Absolute Maximum Ratings....6
6.2 ESD Ratings....6
6.3 Recommended Operating Conditions....6
6.4 Thermal Information....6
6.5 Electrical Characteristics....7
6.6 Typical Characteristics (All Devices Excluding TPS2051BDBV and TPS2052BD)....9
6.7 Typical Characteristics (TPS2051BDBV and TPS2052BD)....13
7 Parameter Measurement Information....16
8 Detailed Description....17
8.1 Overview....17
8.2 Functional Block Diagrams....17
8.3 Feature Description....20
8.4 Device Functional Modes....22
9 Application and Implementation....23
9.1 Application Information....23
9.2 Typical Application....23
10 Power Supply Recommendations....36
10.1 Undervoltage Lockout (UVLO)....36
11 Layout....37
11.1 Layout Guidelines....37
11.2 Layout Example....37
11.3 Power Dissipation....37
11.4 Thermal Protection....37
12 Device and Documentation Support....39
12.1 Receiving Notification of Documentation Updates....39
12.2 Support Resources....39
12.3 Trademarks....39
12.4 Electrostatic Discharge Caution....39
12.5 Glossary....39
13 Revision History....39
14 Mechanical, Packaging, and Orderable Information....40

Copyright © 2024 Texas Instruments Incorporated

4 General Switch Catalog

GENERAL SWITCH CATALOG						
33 mΩ, Single	80 mΩ, Single	80 mΩ, Dual	80 mΩ, Dual	80 mΩ, Triple	80 mΩ, Quad	80 mΩ, Quad
			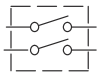	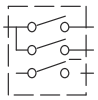	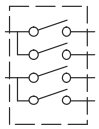	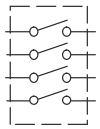
TPS201xA 0.2 A to 2 A TPS202x 0.2 A to 2 A TPS203x 0.2 A to 2 A	TPS2014 600 mA TPS2015 1 A TPS2041B 500 mA TPS2051B 500 mA TPS2045A 250 mA TPS2049 100 mA TPS2055A 250 mA TPS2061 1 A TPS2065 1 A TPS2068 1.5 A TPS2069 1.5 A	TPS2042B 500 mA TPS2052B 500 mA TPS2046B 250 mA TPS2056 250 mA TPS2062 1 A TPS2066 1 A TPS2060 1.5 A TPS2064 1.5 A	TPS2080 500 mA TPS2081 500 mA TPS2082 500 mA TPS2090 250 mA TPS2091 250 mA TPS2092 250 mA	TPS2043B 500 mA TPS2053B 500 mA TPS2047B 250 mA TPS2057A 250 mA TPS2063 1 A TPS2067 1 A	TPS2044B 500 mA TPS2054B 500 mA TPS2048A 250 mA TPS2058 250 mA	TPS2085 500 mA TPS2086 500 mA TPS2087 500 mA TPS2095 250 mA TPS2096 250 mA TPS2097 250 mA

5 Pin Configuration and Functions

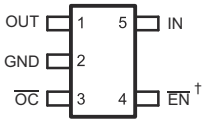

† All enable outputs are active high for the TPS205xB series.

Figure 5-1. TPS2041B and TPS2051B: DBV Package 5-Pin SOT-23 Top View

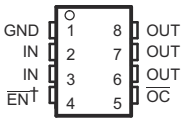

† All enable outputs are active high for the TPS205xB series.

Figure 5-2. TPS2041B and TPS2051B: D and DGN Packages 8-Pin SOIC and HVSSOP Top View

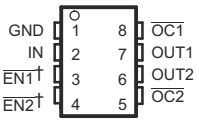

† All enable outputs are active high for the TPS205xB series.

Figure 5-3. TPS2042B and TPS2052B: D and DGN Packages 8-Pin SOIC and HVSSOP Top View

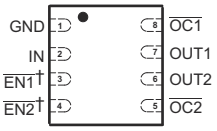

† All enable outputs are active high for the TPS205xB series.

Figure 5-4. TPS2042B and TPS2052B: DRB Package 8-Pin SON Top View

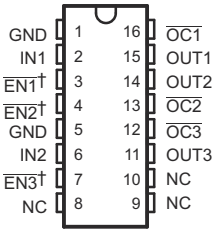

† All enable outputs are active high for the TPS205xB series.

Figure 5-5. TPS2043B and TPS2053B: D Package 16-Pin SOIC Top View

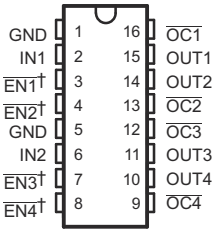

† All enable outputs are active high for the TPS205xB series.

Figure 5-6. TPS2044B and TPS2054B: D Package 16-Pin SOIC Top View

Table 5-1. Pin Functions (TPS2041B and TPS2051B)

PIN					I/O	DESCRIPTION
NAME	TPS2041B	TPS2051B	TPS2041B	TPS2051B		
	SOIC AND DGN		SOT-23			
$\overline{EN}$	4	—	4	—	I	Enable input, logic low turns on power switch
EN	—	4	—	4	I	Enable input, logic high turns on power switch
GND	1	1	2	2	—	Ground
IN	2, 3	2, 3	5	5	I	Input voltage
$\overline{OC}$	5	5	3	3	O	Overcurrent open-drain output, active-low
OUT	6, 7, 8	6, 7, 8	1	1	O	Power-switch output

Table 5-2. Pin Functions (TPS2042B and TPS2052B)

PIN			I/O	DESCRIPTION
NAME	TPS2042B	TPS2052B		
	SOIC, HVSSOP, SON			
$\overline{EN1}$	3	—	I	Enable input, logic low turns on power switch IN-OUT1
$\overline{EN2}$	4	—	I	Enable input, logic low turns on power switch IN-OUT2
EN1	—	3	I	Enable input, logic high turns on power switch IN-OUT1
EN2	—	4	I	Enable input, logic high turns on power switch IN-OUT2
GND	1	1	—	Ground
IN	2	2	I	Input voltage
$\overline{OC1}$	8	8	O	Overcurrent, open-drain output, active low, IN-OUT1
$\overline{OC2}$	5	5	O	Overcurrent, open-drain output, active low, IN-OUT2
OUT1	7	7	O	Power-switch output, IN-OUT1
OUT2	6	6	O	Power-switch output, IN-OUT2
PowerPAD™	—	—	—	Internally connected to GND; used to heat-sink the part to the circuit board traces. Must be connected to GND pin.

Table 5-3. Pin Functions (TPS2043B and TPS2053B)

PIN			I/O	DESCRIPTION
NAME	TPS2043B	TPS2053B		
	SOIC	SOIC		
$\overline{EN1}$	3	—	I	Enable input, logic low turns on power switch IN1-OUT1
$\overline{EN2}$	4	—	I	Enable input, logic low turns on power switch IN1-OUT2
$\overline{EN3}$	7	—	I	Enable input, logic low turns on power switch IN2-OUT3
EN1	—	3	I	Enable input, logic high turns on power switch IN1-OUT1
EN2	—	4	I	Enable input, logic high turns on power switch IN1-OUT2
EN3	—	7	I	Enable input, logic high turns on power switch IN2-OUT3
GND	1, 5	1, 5	—	Ground
IN1	2	2	I	Input voltage for OUT1 and OUT2
IN2	6	6	I	Input voltage for OUT3
NC	8, 9, 10	8, 9, 10	—	No connection
$\overline{OC1}$	16	16	O	Overcurrent, open-drain output, active low, IN1-OUT1
$\overline{OC2}$	13	13	O	Overcurrent, open-drain output, active low, IN1-OUT2
$\overline{OC3}$	12	12	O	Overcurrent, open-drain output, active low, IN2-OUT3
OUT1	15	15	O	Power-switch output, IN1-OUT1
OUT2	14	14	O	Power-switch output, IN1-OUT2
OUT3	11	11	O	Power-switch output, IN2-OUT3

Table 5-4. Pin Functions (TPS2044B and TPS2054B)

PIN			I/O	DESCRIPTION
NAME	TPS2044B	TPS2054B		
	SOIC	SOIC		
$\overline{EN1}$	3	—	I	Enable input, logic low turns on power switch IN1-OUT1
$\overline{EN2}$	4	—	I	Enable input, logic low turns on power switch IN1-OUT2
$\overline{EN3}$	7	—	I	Enable input, logic low turns on power switch IN2-OUT3
$\overline{EN4}$	8	—	I	Enable input, logic low turns on power switch IN2-OUT4
EN1	—	3	I	Enable input, logic high turns on power switch IN1-OUT1
EN2	—	4	I	Enable input, logic high turns on power switch IN1-OUT2

Copyright © 2024 Texas Instruments Incorporated

Table 5-4. Pin Functions (TPS2044B and TPS2054B) (continued)

PIN			I/O	DESCRIPTION
NAME	TPS2044B	TPS2054B		
	SOIC	SOIC		
EN3	—	7	I	Enable input, logic high turns on power switch IN2-OUT3
EN4	—	8	I	Enable input, logic high turns on power switch IN2-OUT4
GND	1, 5	1, 5	—	Ground
IN1	2	2	I	Input voltage for OUT1 and OUT2
IN2	6	6	I	Input voltage for OUT3 and OUT4
$\overline{OC1}$	16	16	O	Overcurrent, open-drain output, active low, IN1-OUT1
$\overline{OC2}$	13	13	O	Overcurrent, open-drain output, active low, IN1-OUT2
$\overline{OC3}$	12	12	O	Overcurrent, open-drain output, active low, IN2-OUT3
$\overline{OC4}$	9	9	O	Overcurrent, open-drain output, active low, IN2-OUT4
OUT1	15	15	O	Power-switch output, IN1-OUT1
OUT2	14	14	O	Power-switch output, IN1-OUT2
OUT3	11	11	O	Power-switch output, IN2-OUT3
OUT4	10	10	O	Power-switch output, IN2-OUT4

Copyright © 2024 Texas Instruments Incorporated

6 Specifications

6.1 Absolute Maximum Ratings

over operating free-air temperature range (unless otherwise noted) [1]

		MIN	MAX	UNIT
$V_{I(IN)}$, $V_{I(INx)}$	Input voltage [2]	–0.3	6	V
$V_{O(OUT)}$, $V_{O(OUTx)}$ [2]	Output voltage	–0.3	6	V
$V_{I(\overline{EN})}$, $V_{I(\overline{ENx})}$, $V_{I(EN)}$, $V_{I(ENx)}$	Input voltage	–0.3	6	V
$V_{I(/OC)}$, $V_{I(\overline{OCx})}$	Voltage range	–0.3	6	V
$I_{O(OUT)}$, $I_{O(OUTx)}$	Continuous output current	Internally limited		
T_J	Operating virtual junction temperature	–40	125	°C
T_{stg}	Storage temperature	–65	150	°C

(1) Stresses beyond those listed under *Absolute Maximum Ratings* may cause permanent damage to the device. These are stress ratings only, which do not imply functional operation of the device at these or any other conditions beyond those indicated under *Recommended Operating Conditions*. Exposure to absolute-maximum-rated conditions for extended periods may affect device reliability.
(2) All voltages are with respect to GND.

6.2 ESD Ratings

			VALUE	UNIT
$V_{(ESD)}$	Electrostatic discharge	Human body model (HBM), per ANSI/ESDA/JEDEC JS-001, all pins[1]	±2000	V
		Charged device model (CDM), per JEDEC specification JESD22-C101, all pins[2]	±500	

(1) JEDEC document JEP155 states that 500-V HBM allows safe manufacturing with a standard ESD control process.
(2) JEDEC document JEP157 states that 250-V CDM allows safe manufacturing with a standard ESD control process.

6.3 Recommended Operating Conditions

over operating free-air temperature range (unless otherwise noted)

		MIN	NOM	MAX	UNIT
$V_{I(IN)}$, $V_{I(INx)}$	Input voltage	2.7		5.5	V
$V_{I(\overline{EN})}$, $V_{I(\overline{ENx})}$, $V_{I(EN)}$, $V_{I(ENx)}$	Input voltage	0		5.5	V
$I_{O(OUT)}$, $I_{O(OUTx)}$	Continuous output current	0		500	mA
T_J	Operating virtual junction temperature	–40		125	°C

6.4 Thermal Information

THERMAL METRIC[1]		D (SOIC)		DBV (SOT-23)	DGN (HVSSOP)	DRB (SON)	UNIT
		8 PINS	16 PINS	5 PINS	8 PINS	8 PINS	
$R_{\theta JA}$	Junction-to-ambient thermal resistance	119.3	81.6	208.6	53.6	47.5	°C/W
$R_{\theta JC(top)}$	Junction-to-case (top) thermal resistance	67.6	42.7	122.9	58.7	53	°C/W
$R_{\theta JB}$	Junction-to-board thermal resistance	59.6	39.1	37.8	35.5	14.2	°C/W
ψ_{JT}	Junction-to-top characterization parameter	20.3	10.4	14.6	2.7	1.2	°C/W
ψ_{JB}	Junction-to-board characterization parameter	59.1	38.8	36.9	35.3	14.2	°C/W
$R_{\theta JC(bot)}$	Junction-to-case (bottom) thermal resistance	N/A	N/A	N/A	6.7	7.3	°C/W

(1) For more information about traditional and new thermal metrics, see the *Semiconductor and IC Package Thermal Metrics* application report.

Copyright © 2024 Texas Instruments Incorporated

6.5 Electrical Characteristics

over recommended operating junction temperature range, $V_{I(IN)}$ = 5.5 V, I_O = 0.5 A, $V_{I(/ENx)}$ = 0 V (unless otherwise noted)

PARAMETER		TEST CONDITIONS[1]			MIN	TYP	MAX	UNIT
POWER SWITCH								
$r_{DS(on)}$	Static drain-source on-state resistance, 5-V operation and 3.3-V operation	$V_{I(IN)}$ = 5 V or 3.3 V, I_O = 0.5 A, -40°C ≤ T_J ≤ 125°C		D and DGN packages		70	135	mΩ
				DBV package only		95	140	
	Static drain-source on-state resistance, 2.7-V operation	$V_{I(IN)}$ = 2.7 V, I_O = 0.5 A, –40°C ≤ T_J ≤ 125°C		D and DGN packages		75	150	mΩ
	Static drain-source on-state resistance, 5-V operation	$V_{I(IN)}$ = 5 V, I_O = 1 A, OUT1 and OUT2 connected, 0°C ≤ T_J ≤ 70°C		DGN package, TPS2042B/52B			49	mΩ
t_r	Rise time, output	$V_{I(IN)}$ = 5.5 V	C_L = 1 µF, R_L = 10 Ω	T_J = 25°C		0.6	1.5	ms
		$V_{I(IN)}$ = 2.7 V				0.4	1	
t_f	Fall time, output	$V_{I(IN)}$ = 5.5 V			0.05		0.5	
		$V_{I(IN)}$ = 2.7 V			0.05		0.5	
ENABLE INPUT $\overline{EN}$ AND $\overline{ENx}$								
V_{IH}	High-level input voltage	2.7 V ≤ $V_{I(IN)}$ ≤ 5.5 V			2			V
V_{IL}	Low-level input voltage	2.7 V ≤ $V_{I(IN)}$ ≤ 5.5 V					0.8	
I_I	Input current	$V_{I(\overline{ENx})}$ = 0 V or 5.5 V			–0.5		0.5	µA
t_{on}	Turnon time	C_L = 100 µF, R_L = 10 Ω					3	ms
t_{off}	Turnoff time	C_L = 100 µF, R_L = 10 Ω					10	
CURRENT LIMIT								
I_{OS}	Short-circuit output current	$V_{I(IN)}$ = 5 V, OUT connected to GND, device enabled into short-circuit		T_J = 25°C	0.75	1	1.25	A
				–40°C ≤ T_J ≤ 125°C	0.7	1	1.3	
		$V_{I(IN)}$ = 5 V, OUT1 and OUT2 connected to GND, device enabled into short-circuit, measure at IN		0°C ≤ T_J ≤ 70°C TPS2042B/52B	1.5			
I_{OC} [2]	Overcurrent trip threshold	V_{IN} = 5 V, 100 A/s	TPS2042B TPS2052B (DRB package only)		I_{OS}	1.55	2	A
SUPPLY CURRENT (TPS2041B, TPS2051B)								
Supply current, low-level output		No load on OUT, $V_{I(\overline{ENx})}$ = 5.5 V, or $V_{I(ENx)}$ = 0 V		T_J = 25°C		0.5	1	µA
				-40°°C ≤ T_J ≤ 125°C		0.5	5	
Supply current, high-level output		No load on OUT, $V_{I(\overline{ENx})}$ = 0 V, or $V_{I(ENx)}$ = 5.5 V		T_J = 25°C		75	95	µA
				–40°C ≤ T_J ≤ 125°C		75	95	
Leakage current		OUT connected to ground, $V_{I(\overline{ENx})}$ = 5.5 V, or $V_{I(ENx)}$ = 0 V		–40°C ≤ T_J ≤ 125°C		1		µA
Reverse leakage current		$V_{I(OUTx)}$ = 5.5 V, IN = ground		T_J = 25°C		0		µA
SUPPLY CURRENT (TPS2042B, TPS2052B)								
Supply current, low-level output		No load on OUT, $V_{I(\overline{ENx})}$ = 5.5 V		T_J = 25°C		0.5	1	µA
				–40°C ≤ T_J ≤ 125°C		0.5	5	
Supply current, high-level output		No load on OUT, $V_{I(\overline{ENx})}$ = 0 V	TPS20x2B (DRB package only)	T_J = 25°C		50	70	µA
				–40°C ≤ T_J ≤ 125°C		50	90	
			TPS20x2B (D and DGN packages)	T_J = 25°C		95	120	uA
				–40°C ≤ T_J ≤ 125°C		95	120	
Leakage current		OUT connected to ground, $V_{I(\overline{ENx})}$ = 5.5 V		–40°C ≤ T_J ≤ 125°C		1		µA
Reverse leakage current		$V_{I(OUTx)}$ = 5.5 V, IN = ground		T_J = 25°C		0.2		µA

6.5 Electrical Characteristics (continued)

over recommended operating junction temperature range, $V_{I(IN)}$ = 5.5 V, I_O = 0.5 A, $V_{I(/ENx)}$ = 0 V (unless otherwise noted)

PARAMETER	TEST CONDITIONS[1]		MIN	TYP	MAX	UNIT
SUPPLY CURRENT (TPS2043B, TPS2053B)						
Supply current, low-level output	No load on OUT, $V_{I(ENx)}$ = 0 V	T_J = 25°C		0.5	2	µA
		–40°C ≤ T_J ≤ 125°C		0.5	10	
Supply current, high-level output	No load on OUT, $V_{I(ENx)}$ = 5.5 V	T_J = 25°C		65	90	µA
		–40°C ≤ T_J ≤ 125°C		65	110	
Leakage current	OUT connected to ground, $V_{I(ENx)}$ = 0 V	–40°C≤ T_J ≤ 125°C		1		µA
Reverse leakage current	$V_{I(OUTx)}$ = 5.5 V, INx = ground	T_J = 25°C		0.2		µA
SUPPLY CURRENT (TPS2044B, TPS2054B)						
Supply current, low-level output	No load on OUT, $V_{I(\overline{ENx})}$ = 5.5 V, or $V_{I(ENx)}$ = 0 V	T_J = 25°C		0.5	2	µA
		–40°C ≤ T_J ≤ 125°C		0.5	10	
Supply current, high-level output	No load on OUT, $V_{I(\overline{ENx})}$ = 0 V, or $V_{I(ENx)}$ = 5.5 V	T_J = 25°C		75	110	µA
		–40°C ≤ T_J ≤ 125°C		75	140	
Leakage current	OUT connected to ground, $V_{I(\overline{ENx})}$ = 5.5 V, or $V_{I(ENx)}$ = 0 V	–40°C≤ T_J ≤ 125°C		1		µA
Reverse leakage current	$V_{I(OUTx)}$ = 5.5 V, INx = ground	T_J = 25°C		0.2		µA
UNDERVOLTAGE LOCKOUT (TPS20x3BD, TPS20x4BD, & TPS20x2BDRB)						
Low-level input voltage, IN, INx			2		2.5	V
Hysteresis, IN, INx	T_J = 25°C			75		mV
UNDERVOLTAGE LOCKOUT (TPS20x1B & TPS20x2B; D/DBV/DGN packages)						
Low-level input voltage, IN, INx			2		2.6	V
Hysteresis, IN, INx	T_J = 25°C			75		mV
OVERCURRENT $\overline{OC}$ and $\overline{OCx}$						
Output low voltage, $V_{OL(/OCx)}$	$I_{O(\overline{OCx})}$ = 5 mA				0.4	V
Off-state current	$V_{O(\overline{OCx})}$ = 5 V or 3.3 V				1	µA
$\overline{OC}$ deglitch	$\overline{OCx}$ assertion or deassertion		4	8	15	ms
THERMAL SHUTDOWN[3]						
Thermal shutdown threshold			135			°C
Recovery from thermal shutdown			125			°C
Hysteresis				10		°C

(1) Pulse-testing techniques maintain junction temperature close to ambient temperature; thermal effects must be taken into account separately.
(2) TPS20x1B and TPS20x2B devices in the D, DGN, and DBV packages do not have overcurrent trip thresholds. Current is limited to I_{OS} under different test condition. Check Section 8.3.7 for more details.
(3) The thermal shutdown only reacts under overcurrent conditions.

Copyright © 2024 Texas Instruments Incorporated

6.6 Typical Characteristics (All Devices Excluding TPS2051BDBV and TPS2052BD)

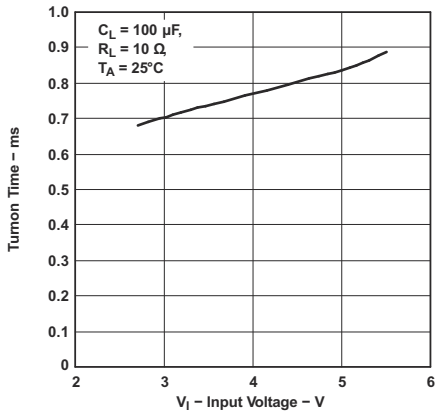

Figure 6-1. Turnon Time vs Input Voltage

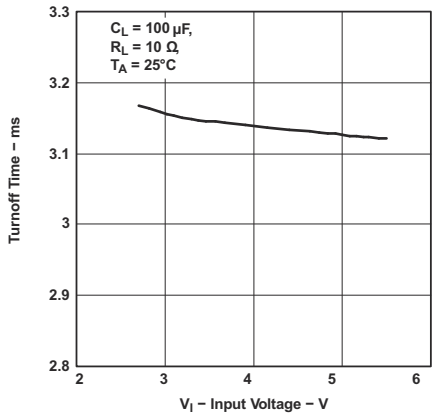

Figure 6-2. Turnoff Time vs Input Voltage

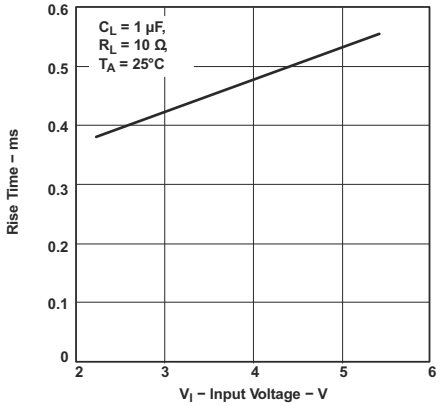

Figure 6-3. Rise Time vs Input Voltage

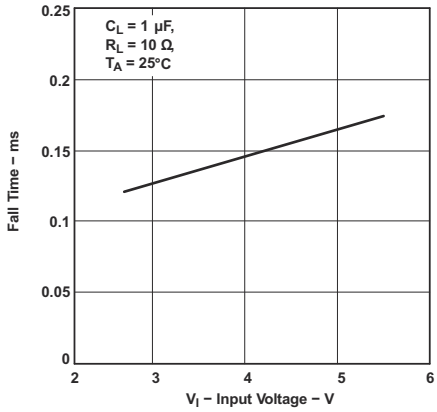

Figure 6-4. Fall Time vs Input Voltage

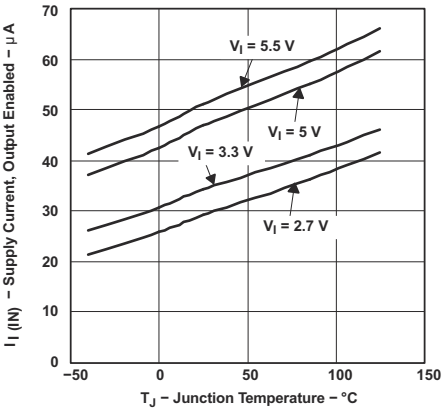

Figure 6-5. TPS20x2BDRB Supply Current, Output Enabled vs Junction Temperature

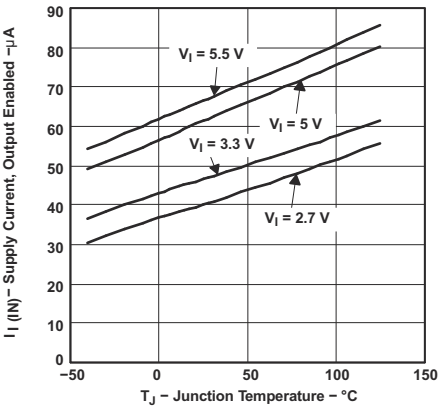

Figure 6-6. TPS2043B and TPS2053B Supply Current, Output Enabled vs Junction Temperature

6.6 Typical Characteristics (All Devices Excluding TPS2051BDBV and TPS2052BD) (continued)

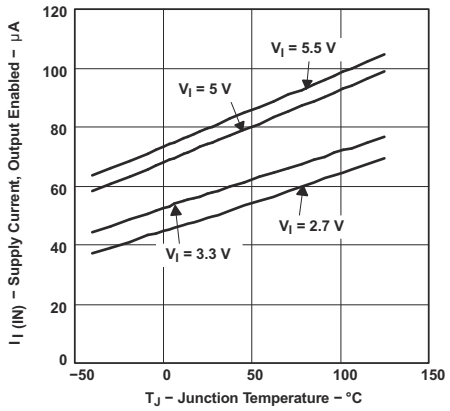

Figure 6-7. TPS2044B TPS2054B Supply Current, Output Enabled vs Junction Temperature

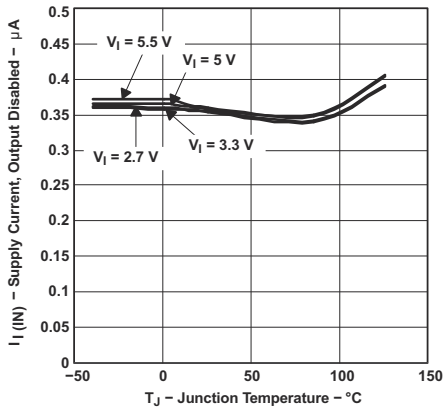

Figure 6-8. TPS20x2BDRB Supply Current, Output Disabled vs Junction Temperature

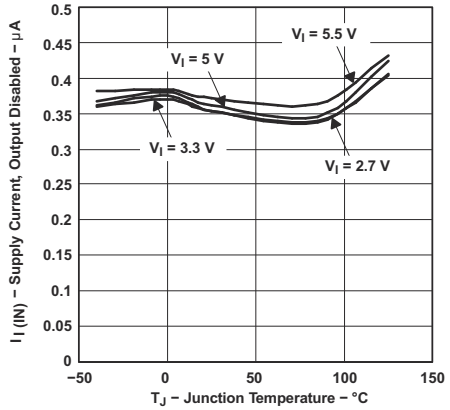

Figure 6-9. TPS2043B and TPS2053B Supply Current, Output Disabled vs Junction Temperature

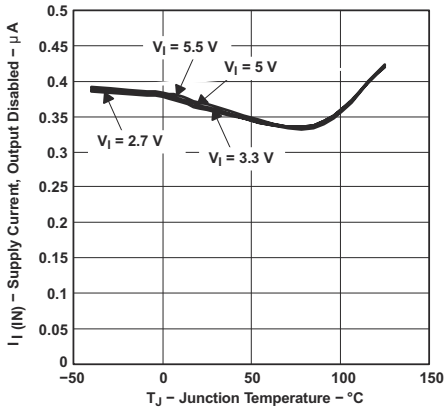

Figure 6-10. TPS2044B and TPS2054B Supply Current, Output Disabled vs Junction Temperature

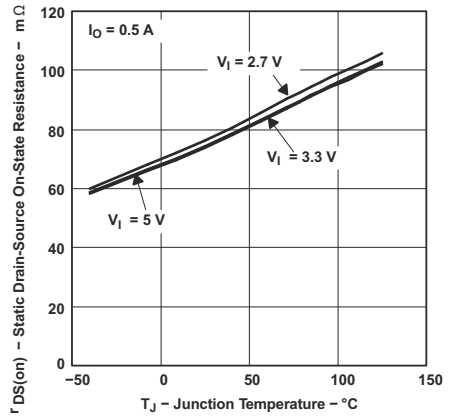

Figure 6-11. Static Drain-Source on-State Resistance vs Junction Temperature

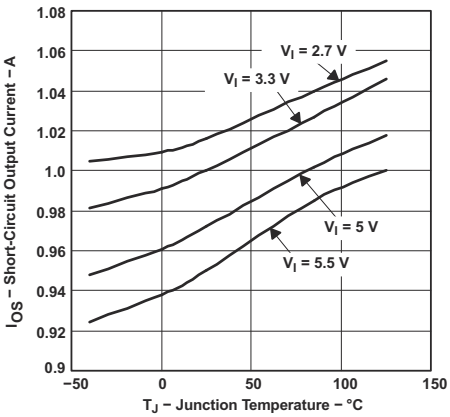

Figure 6-12. Short-Circuit Output Current vs Junction Temperature

Copyright © 2024 Texas Instruments Incorporated

6.6 Typical Characteristics (All Devices Excluding TPS2051BDBV and TPS2052BD) (continued)

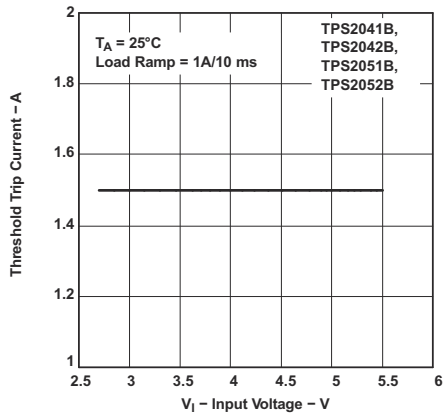

Figure 6-13. Threshold Trip Current vs Input Voltage

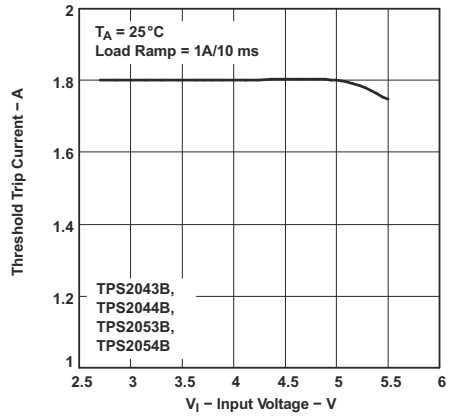

Figure 6-14. Threshold Trip Current vs Input Voltage

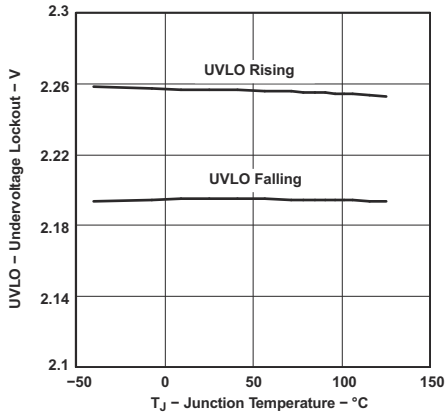

Figure 6-15. Undervoltage Lockout vs Junction Temperature

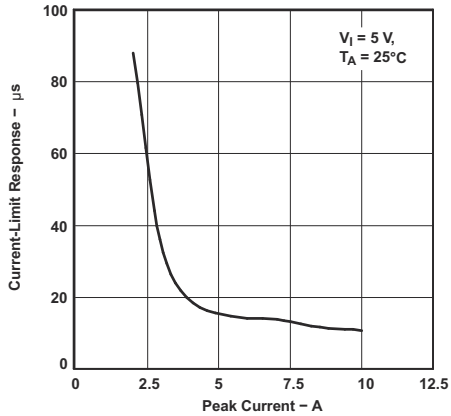

Figure 6-16. Current-Limit Response vs Peak Current

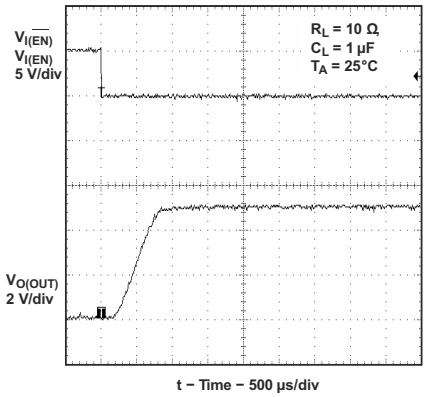

Figure 6-17. Turnon Delay and Rise Time With 1-µF Load

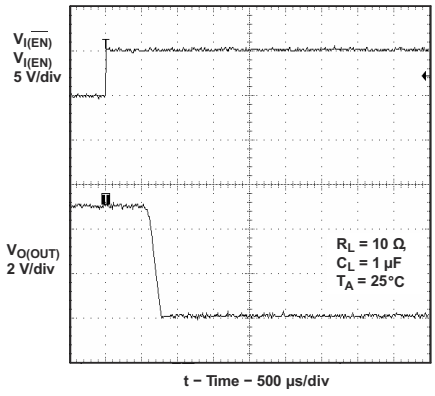

Figure 6-18. Turnoff Delay and Fall Time With 1-µF Load

6.6 Typical Characteristics (All Devices Excluding TPS2051BDBV and TPS2052BD) (continued)

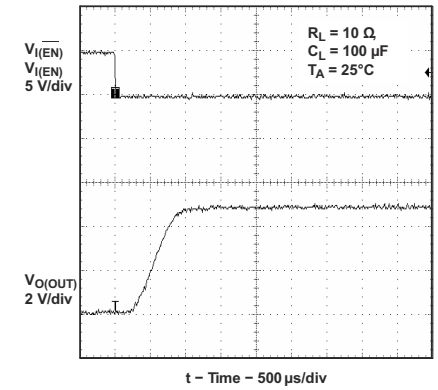

Figure 6-19. Turnon Delay and Rise Time With 100-µF Load

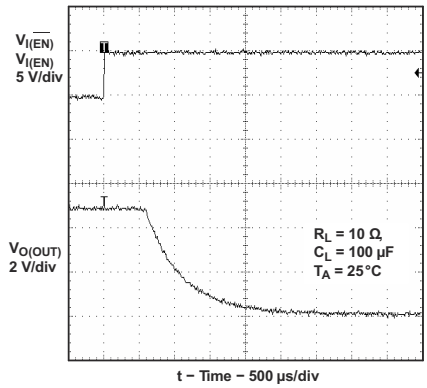

Figure 6-20. Turnoff Delay and Fall Time With 100-µF Load

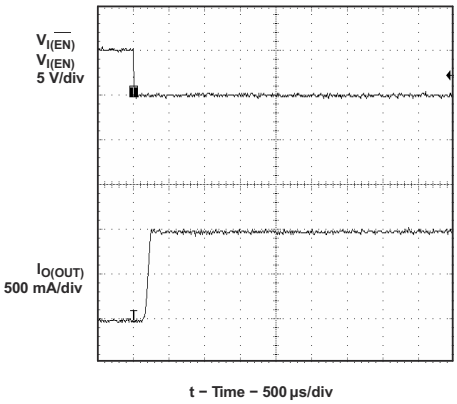

Figure 6-21. Short-Circuit Current, Device Enabled Into Short

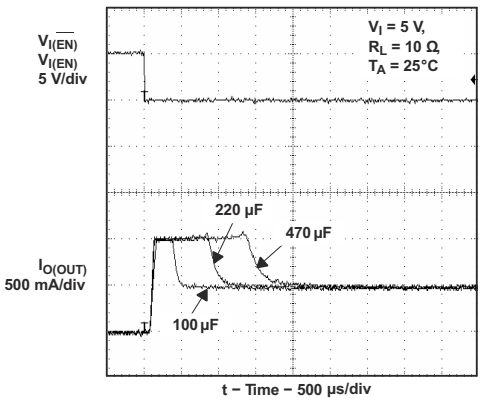

Figure 6-22. Inrush Current With Different Load Capacitance

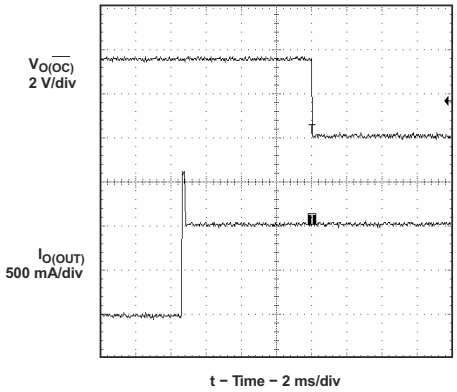

Figure 6-23. 3-Ω Load Connected to Enabled Device

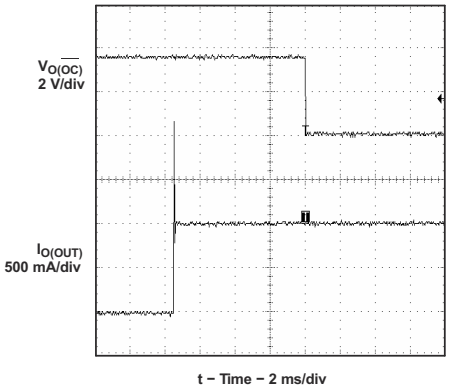

Figure 6-24. 2-Ω Load Connected to Enabled Device

Copyright © 2024 Texas Instruments Incorporated

6.7 Typical Characteristics (TPS2051BDBV and TPS2052BD)

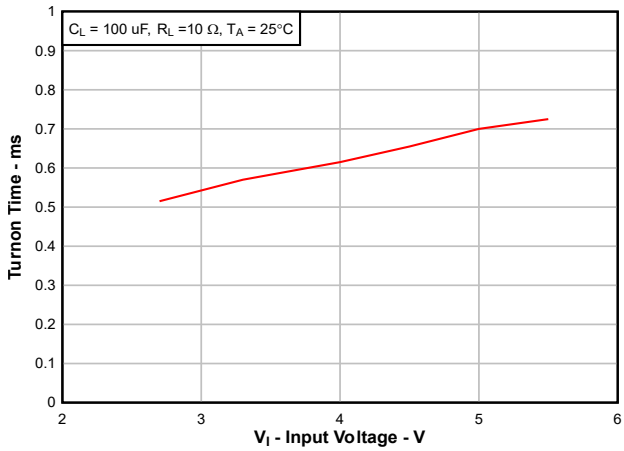

Figure 6-25. Turnon Time vs Input Voltage

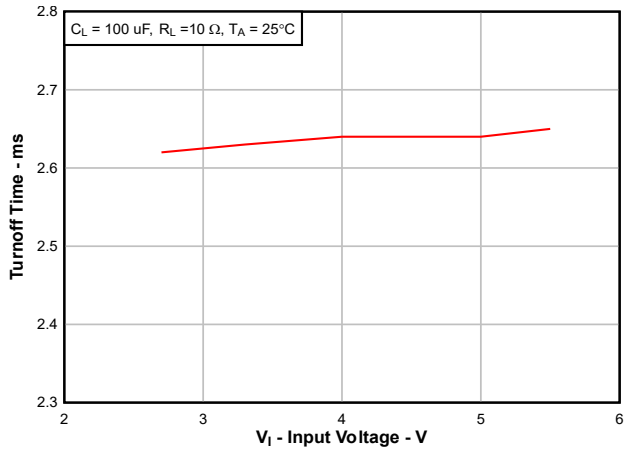

Figure 6-26. Turnoff Time vs Input Voltage

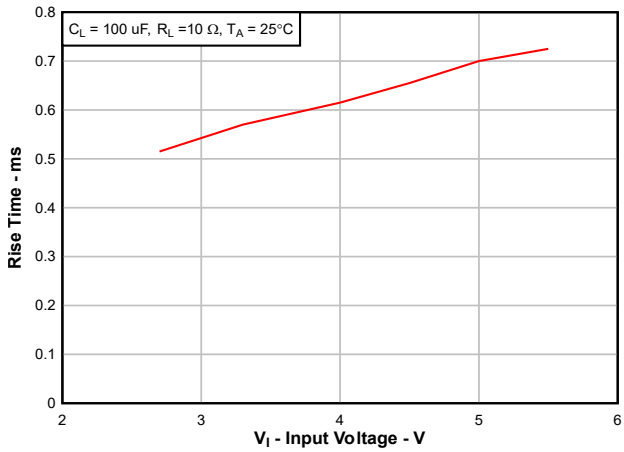

Figure 6-27. Rise Time vs Input Voltage

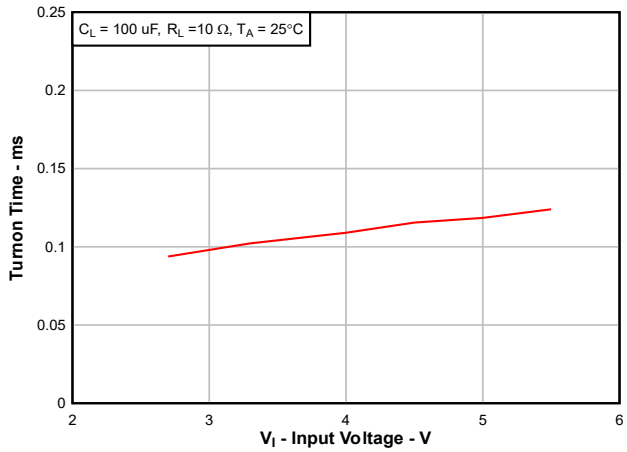

\

Figure 6-28. Fall Time vs Input Voltage

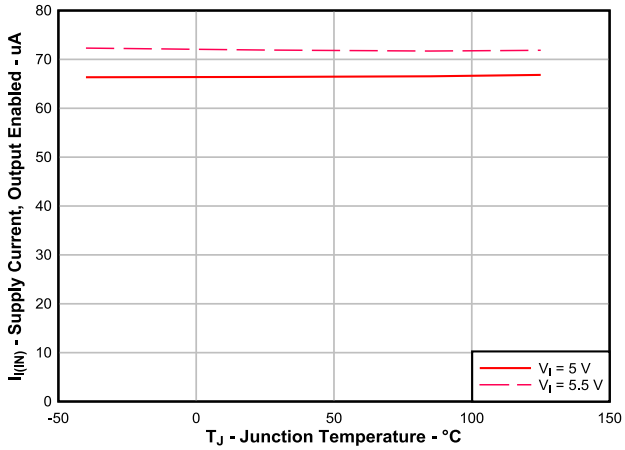

Figure 6-29. TPS2051BDBV Supply Current, Output Enabled vs Junction Temperature

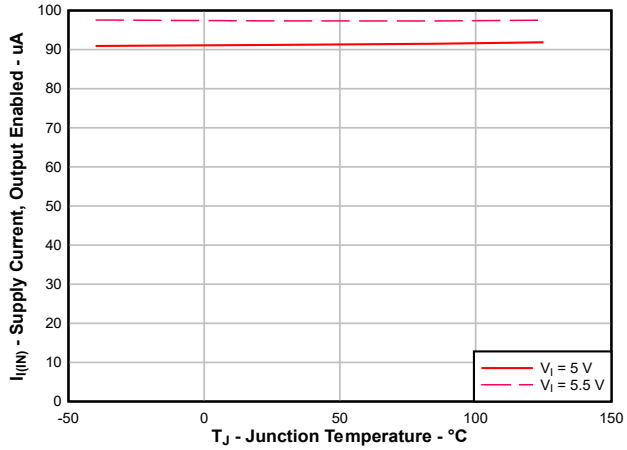

Figure 6-30. TPS2052BD Supply Current, Output Enabled vs Junction Temperature

6.7 Typical Characteristics (TPS2051BDBV and TPS2052BD) (continued)

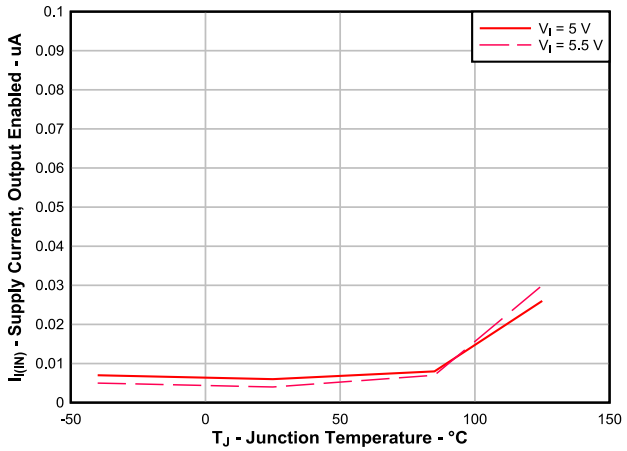

Figure 6-31. TPS2051BDBV Supply Current, Output Disabled vs Junction Temperature

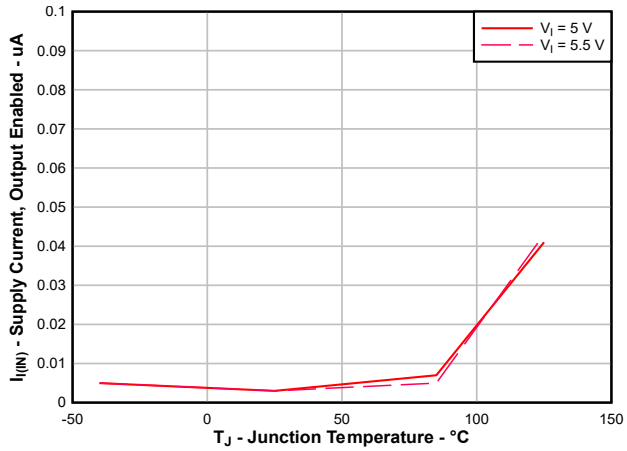

Figure 6-32. TPS2052BD Supply Current, Output Disabled vs Junction Temperature

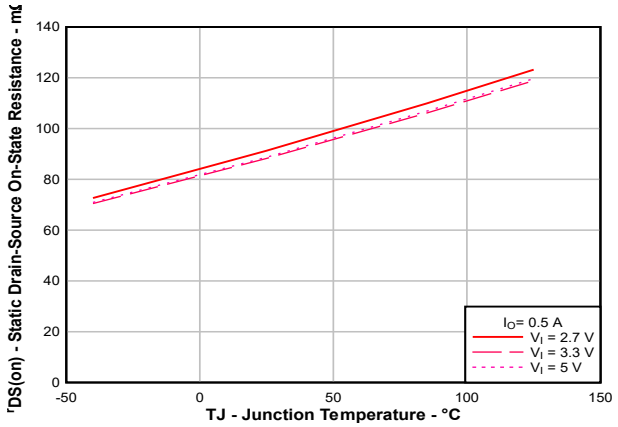

Figure 6-33. DBV Package Static Drain-Source on-State Resistance vs Junction Temperature

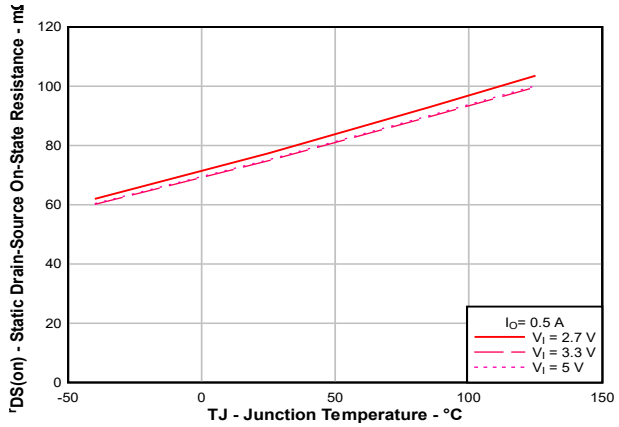

Figure 6-34. D Package Static Drain-Source on-State Resistance vs Junction Temperature

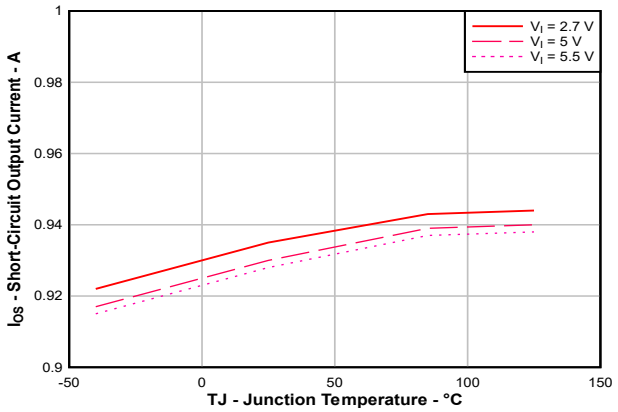

Figure 6-35. Short-Circuit Output Current vs Junction Temperature

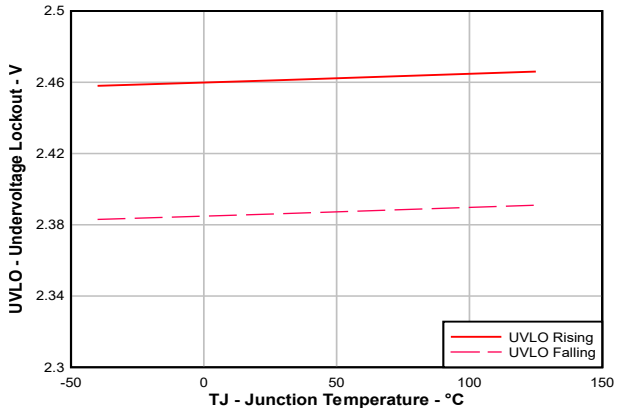

Figure 6-36. Undervoltage Lockout vs Junction Temperature

Copyright © 2024 Texas Instruments Incorporated

6.7 Typical Characteristics (TPS2051BDBV and TPS2052BD) (continued)

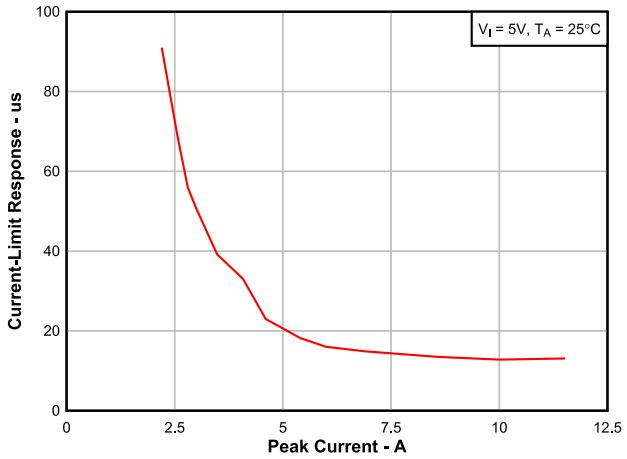

Figure 6-37. Current-Limit Response vs Peak Current

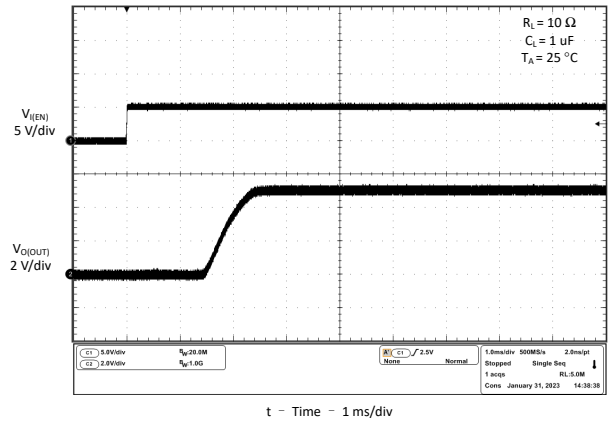

Figure 6-38. Turnon Delay and Rise Time With 1-µF Load

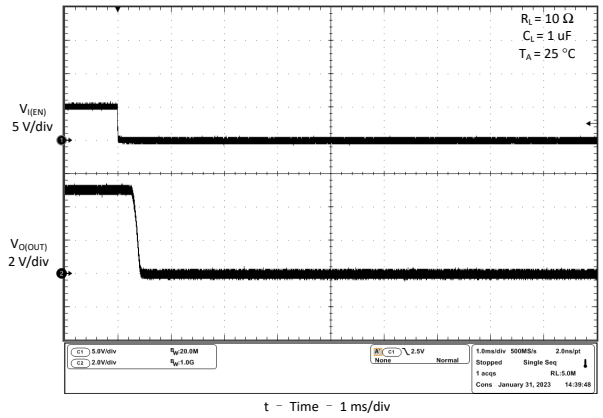

Figure 6-39. Turnoff Delay and Fall Time With 1-µF Load

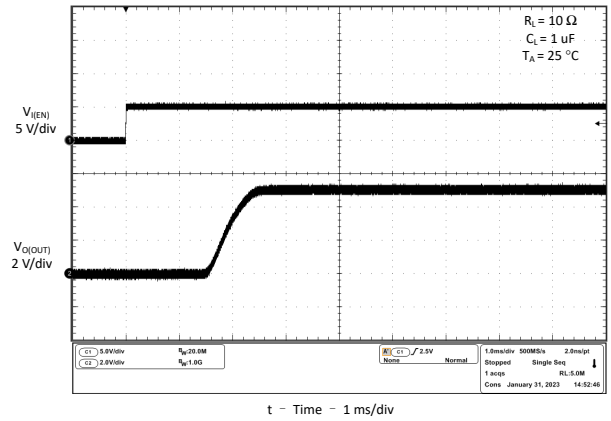

Figure 6-40. Turnon Delay and Rise Time With 100-µF Load

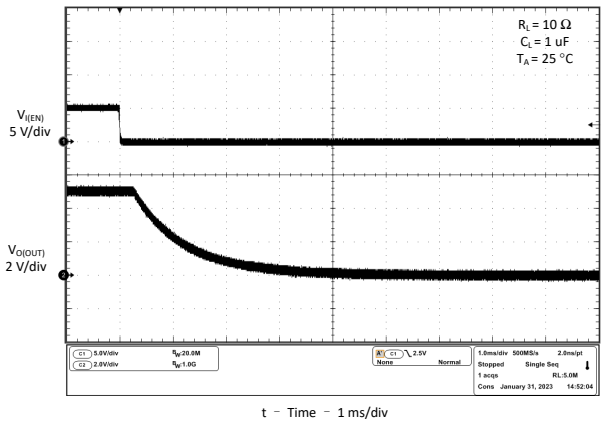

Figure 6-41. Turnoff Delay and Fall Time With 100-µF Load

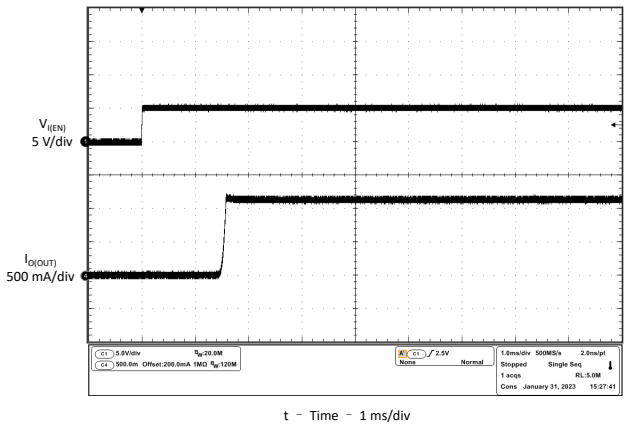

Figure 6-42. Short-Circuit Current, Device Enabled Into Short

6.7 Typical Characteristics (TPS2051BDBV and TPS2052BD) (continued)

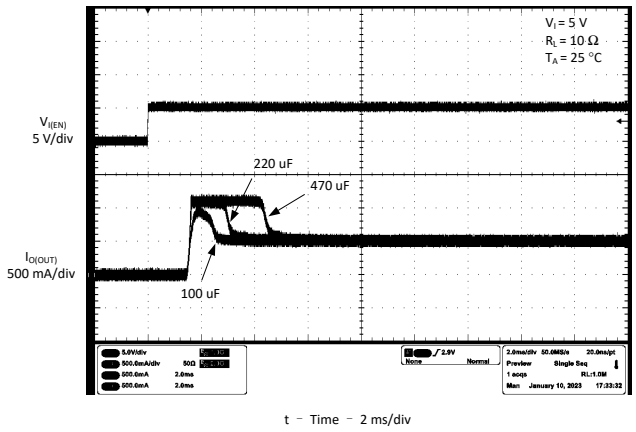

Figure 6-43. Inrush Current With Different Load Capacitance

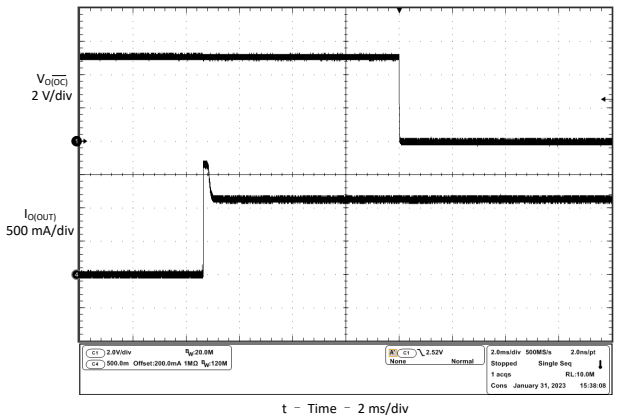

Figure 6-44. 3-Ω Load Connected to Enabled Device

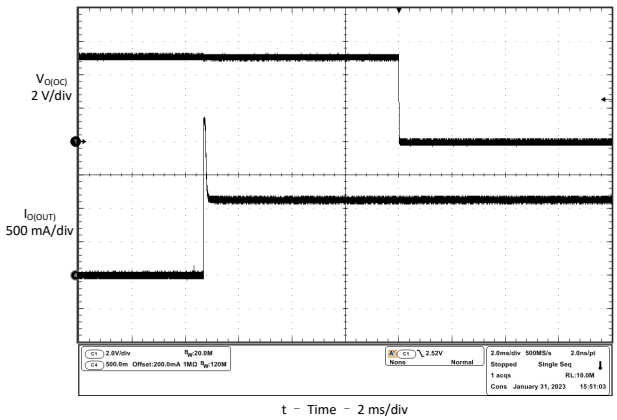

Figure 6-45. 2-Ω Load Connected to Enabled Device

7 Parameter Measurement Information

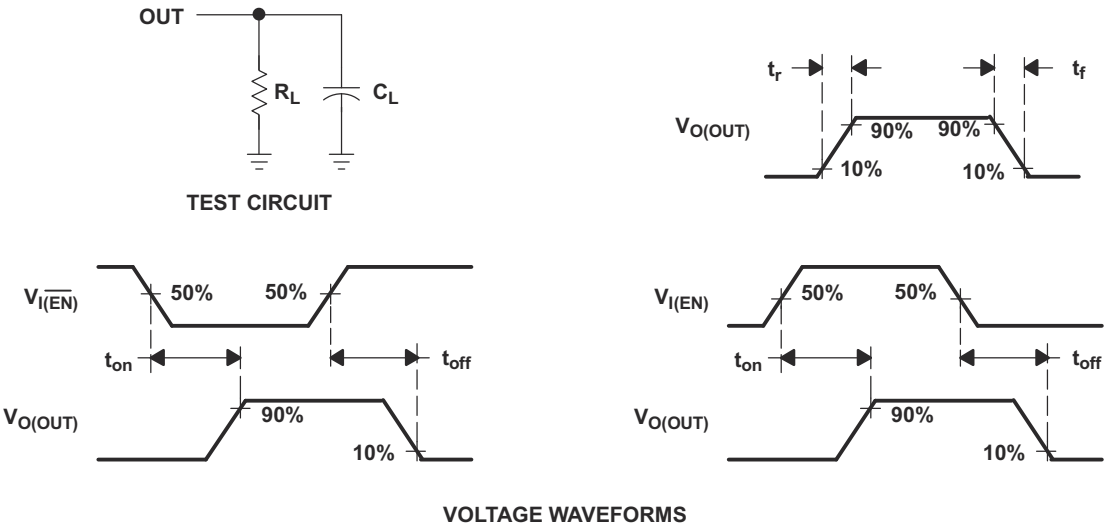

Figure 7-1. Test Circuit and Voltage Waveforms

Copyright © 2024 Texas Instruments Incorporated

8 Detailed Description

8.1 Overview

The TPS20xxB are current-limited, power-distribution switches providing 0.5-A continuous load current. These devices incorporates 70-mΩ N-channel MOSFET power switches for power-distribution systems that require multiple power switches in a single package. Gate driver is provided by an internal charge pump designed to minimize current surges during switching. The charge pump requires no external components and allows operation supplies as low as 2.7 V.

8.2 Functional Block Diagrams

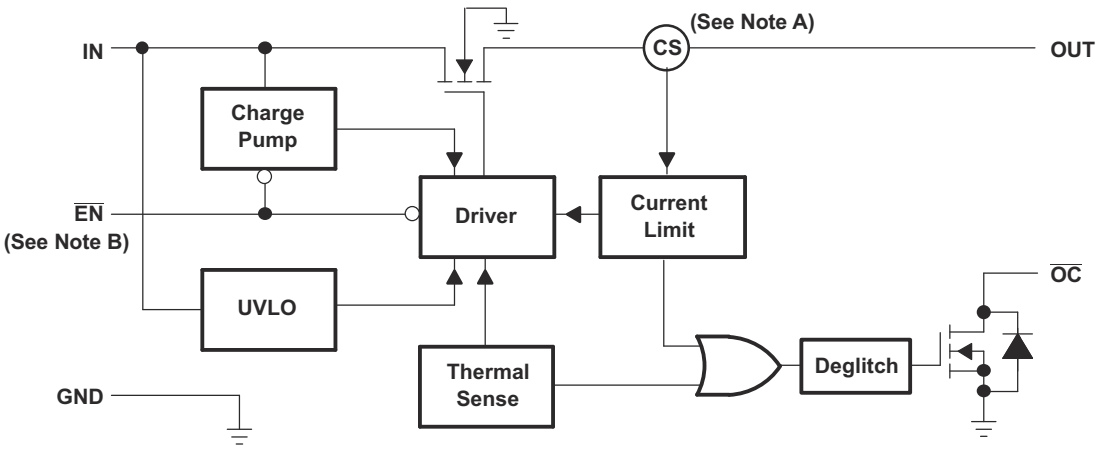

Note A: Current sense
Note B: Active low ($\overline{EN}$) for TPS2041B; Active high (EN) for TPS2051B

Figure 8-1. Functional Block Diagram (TPS2041B and TPS2051B)

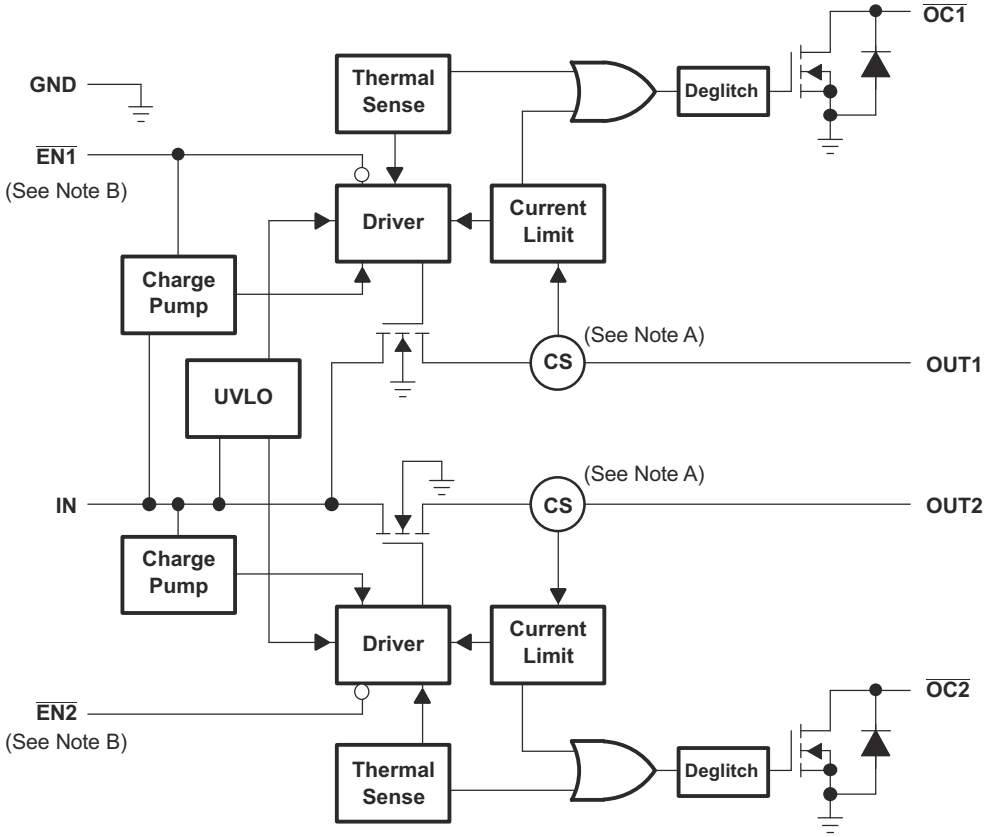

Note A: Current sense

Note B: Active low ($\overline{\text{ENx}}$) for TPS2042B; Active high (ENx) for TPS2052B

Figure 8-2. Functional Block Diagram (TPS2042B and TPS2052B)

Copyright © 2024 Texas Instruments Incorporated

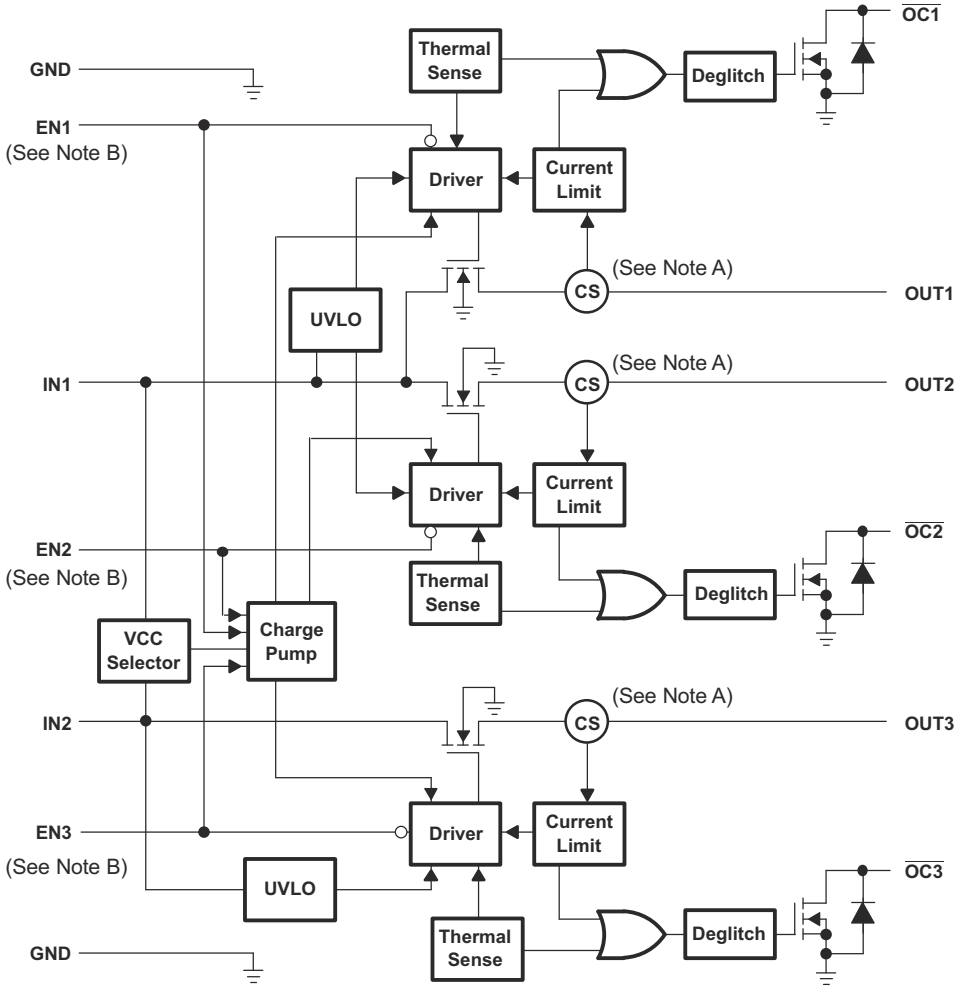

Note A: Current sense

Note B: Active low ($\overline{ENx}$) for TPS2043B; Active high (ENx) for TPS2053B

Figure 8-3. Functional Block Diagram (TPS2043B and TPS2053B)

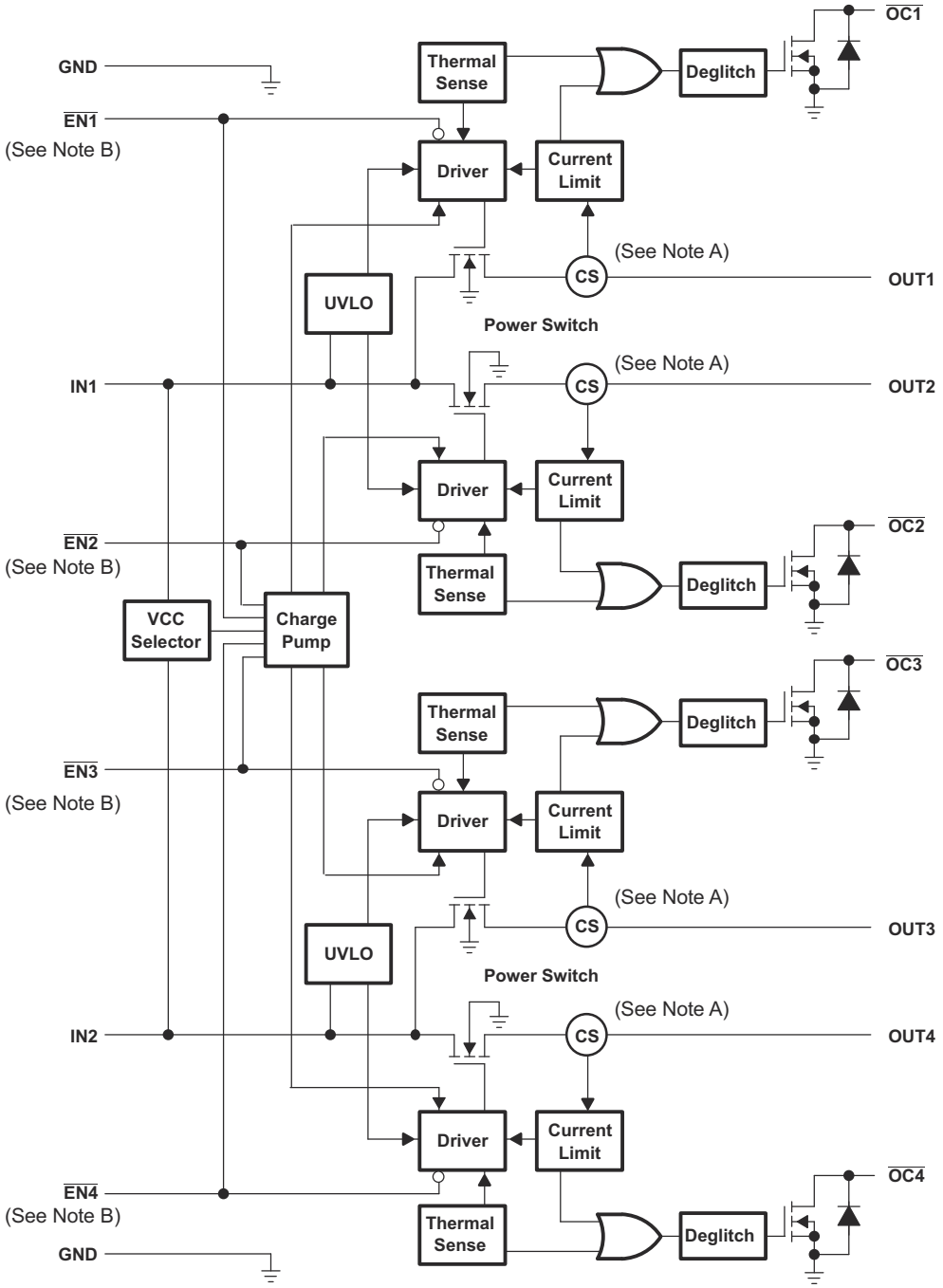

Note A: Current sense

Note B: Active low ($\overline{\text{ENx}}$) for TPS2044B; Active high (ENx) for TPS2054B

Figure 8-4. Functional Block Diagram (TPS2044B and TPS2054B)

8.3 Feature Description

8.3.1 Power Switch

The power switch is an N-channel MOSFET with a low on-state resistance. Configured as a high-side switch, the power switch prevents current flow from OUT to IN and IN to OUT when disabled. The power switch supplies a minimum current of 500 mA.

Copyright © 2024 Texas Instruments Incorporated

8.3.2 Charge Pump

An internal charge pump supplies power to the driver circuit and provides the necessary voltage to pull the gate of the MOSFET above the source. The charge pump operates from input voltages as low as 2.7 V and requires little supply current.

8.3.3 Driver

The driver controls the gate voltage of the power switch. To limit large current surges and reduce the associated electromagnetic interference (EMI) produced, the driver incorporates circuitry that controls the rise times and fall times of the output voltage.

8.3.4 Enable ($\overline{ENx}$)

The logic enable pin disables the power switch and the bias for the charge pump, driver, and other circuitry to reduce the supply current. The supply current is reduced to less than 1 µA or 2 µA when a logic high is present on $\overline{EN}$. A logic zero input on $\overline{EN}$ restores bias to the drive and control circuits and turns the switch on. The enable input is compatible with both TTL and CMOS logic levels.

8.3.5 Enable (ENx)

The logic enable disables the power switch and the bias for the charge pump, driver, and other circuitry to reduce the supply current. The supply current is reduced to less than 1 µA or 2 µA when a logic low is present on ENx. A logic high input on ENx restores bias to the drive and control circuits and turns the switch on. The enable input is compatible with both TTL and CMOS logic levels.

8.3.6 Current Sense

A sense FET monitors the current supplied to the load. The sense FET measures current more efficiently than conventional resistance methods. When an overload or short circuit is encountered, the current-sense circuitry sends a control signal to the driver. The driver in turn reduces the gate voltage and drives the power FET into its saturation region, which switches the output into a constant-current mode and holds the current constant while varying the voltage on the load.

8.3.7 Overcurrent

A sense FET is employed to check for overcurrent conditions. Unlike current-sense resistors, sense FETs do not increase the series resistance of the current path. When an overcurrent condition is detected, the device maintains a constant output current and reduces the output voltage accordingly. Complete shutdown occurs only if the fault is present long enough to activate thermal limiting.

There are two kinds of current limit profiles for the TPS20xxB family of devices.

The TPS20x3BD, TPS20x4BD, and TPS20x2BDRB devices have an output I vs V characteristic similar to the plot labeled **Current Limit with Peaking** in Figure 8-5. This type of limiting can be characterized by two parameters, the overcurrent trip threshold (I_{OC}), and the short-circuit output current threshold (I_{OS}).

The TPS20x1B and TPS20x2B devices in the D, DGN, and DBV packages have an output I vs V characteristic similar to the plot labeled **Flat Current Limit** in Figure 8-5. This type of limiting can be characterized by one parameters, the short circuit current (I_{OS}).

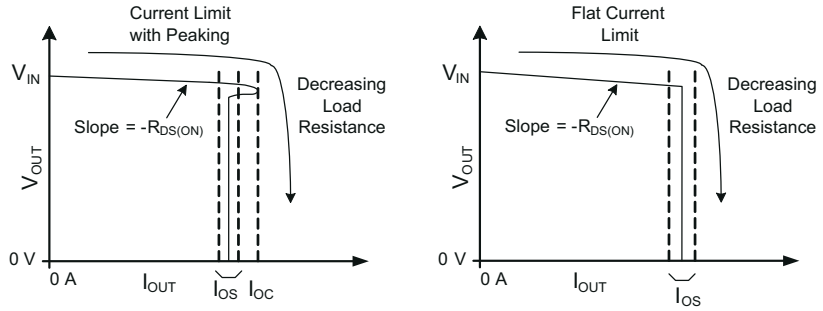

Figure 8-5. Current Limit Profiles

8.3.7.1 Overcurrent Conditions (TPS20x3BD, TPS20x4BD, and TPS20x2BDRB)

Three possible overload conditions can occur for TPS20x3BD, TPS20x4BD, and TPS20x2BDRB devices. In the first condition, the output has been shorted before the device is enabled or before $V_{I(IN)}$ has been applied (see Figure 6-21 through Figure 6-24). The TPS20xxB senses the short and immediately switches into a constant-current output.

In the second condition, a short or an overload occurs while the device is enabled. At the instant the overload occurs, high currents may flow for a short period of time before the current-limit circuit can react. After the current-limit circuit has tripped (reached the overcurrent trip threshold (I_{OC})), the device switches into constant-current mode and current is limited at the short-circuit output current threshold (I_{OS}).

In the third condition, the load has been gradually increased beyond the recommended operating current. The current is permitted to rise until the overcurrent trip threshold (I_{OC}) is reached or until the thermal limit of the device is exceeded. The TPS20x3BD, TPS20x4BD, and TPS20x2BDRB are capable of delivering current up to the current-limit threshold without damaging the device. Once the overcurrent trip threshold (I_{OC}) has been reached, the device switches into its constant-current mode current is limited at the short-circuit output current threshold (I_{OS}).

8.3.7.2 Overcurrent Conditions (TPS20x1B & TPS20x2B in D, DGN, and DBV packages)

Three possible overload conditions can occur for the TPS20x1B and TPS20x2B devices in the D, DGN, and DBV packages. In the first condition, the output has been shorted before the device is enabled or before $V_{I(IN)}$ has been applied (see Figure 6-42 through Figure 6-45). The TPS20xxB senses the short and immediately switches into a constant-current output.

In the second condition, a short or an overload occurs while the device is enabled. At the instant the overload occurs, high currents may flow for a short period of time before the current-limit circuit can react. After the short-circuit output current threshold (I_{OS}) is reached, the device switches into constant-current mode.

In the third condition, the load has been gradually increased beyond the recommended operating current. After the short-circuit output current threshold (I_{OS}) is reached, the device switches into constant-current mode.

8.3.8 Overcurrent ($\overline{OCx}$)

The $\overline{OCx}$ open-drain output is asserted (active low) when an overcurrent or overtemperature condition is encountered. The output remains asserted until the overcurrent or overtemperature condition is removed. A 10-ms deglitch circuit prevents the $\overline{OCx}$ signal from oscillation or false triggering. If an overtemperature shutdown occurs, the $\overline{OCx}$ is asserted instantaneously.

8.3.9 Thermal Sense

The TPS20xxB implements a thermal sensing to monitor the operating temperature of the power distribution switch. In an overcurrent or short-circuit condition, the junction temperature rises. When the die temperature rises to approximately 140°C due to overcurrent conditions, the internal thermal sense circuitry turns off the switch, thus preventing the device from damage. Hysteresis is built into the thermal sense, and after the device has cooled approximately 10 degrees, the switch turns back on. The switch continues to cycle off and on until the fault is removed. The open-drain false reporting output ($\overline{OCx}$) is asserted (active low) when an overtemperature shutdown or overcurrent occurs.

8.3.10 Undervoltage Lockout

A voltage sense circuit monitors the input voltage. When the input voltage is below approximately 2 V, a control signal turns off the power switch.

8.4 Device Functional Modes

There are no other functional modes for TPS20xxB devices.

Copyright © 2024 Texas Instruments Incorporated

9 Application and Implementation

Note

Information in the following applications sections is not part of the TI component specification, and TI does not warrant its accuracy or completeness. TI's customers are responsible for determining suitability of components for their purposes, as well as validating and testing their design implementation to confirm system functionality.

9.1 Application Information

9.1.1 Universal Serial Bus (USB) Applications

The universal serial bus (USB) interface is a 12-Mb/s, or 1.5-Mb/s, multiplexed serial bus designed for low-to-medium bandwidth PC peripherals (for example, keyboards, printers, scanners, and mice). The four-wire USB interface is conceived for dynamic attach-detach (hot plug-unplug) of peripherals. Two lines are provided for differential data, and two lines are provided for 5-V power distribution.

USB data is a 3.3-V level signal, but power is distributed at 5 V to allow for voltage drops in cases where power is distributed through more than one hub across long cables. Each function must provide its own regulated 3.3 V from the 5-V input or its own internal power supply.

The USB specification defines the following five classes of devices, each differentiated by power-consumption requirements:

- Hosts and self-powered hubs (SPH)
- Bus-powered hubs (BPH)
- Low-power, bus-powered functions
- High-power, bus-powered functions
- Self-powered functions

Self-powered and bus-powered hubs distribute data and power to downstream functions. The TPS20xxB can provide power-distribution solutions to many of these classes of devices.

9.2 Typical Application

9.2.1 Typical Application (TPS2042B)

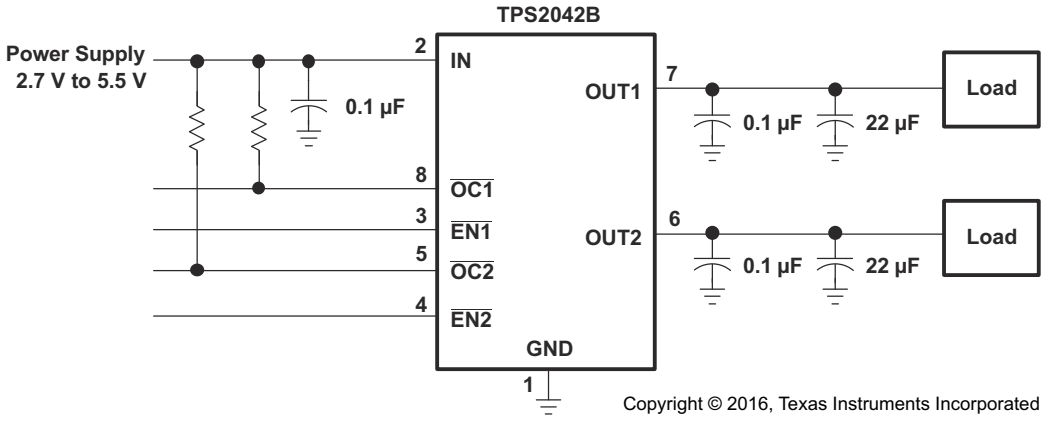

Figure 9-1. Typical Application (Example, TPS2042B)

9.2.1.1 Design Requirements

Table 9-1 shows the design parameters for this application.

Table 9-1. Design Parameters

DESIGN PARAMETER	VALUE
Input voltage	5 V

Table 9-1. Design Parameters (continued)

DESIGN PARAMETER	VALUE
Output1 voltage	5 V
Output2 voltage	5 V
Output1 current	0.5 A
Output2 current	0.5 A

9.2.1.2 Detailed Design Procedure

9.2.1.2.1 Power-Supply Considerations

TI recommends placing a 0.01-µF to 0.1-µF ceramic bypass capacitor between IN and GND, close to the device. When the output load is heavy, TI recommends placing a high-value electrolytic capacitor on the necessary output pins. This precaution reduces power-supply transients that may cause ringing on the input. Additionally, bypassing the output with a 0.01-µF to 0.1-µF ceramic capacitor improves the immunity of the device to short-circuit transients.

9.2.1.2.2 $\overline{OC}$ Response

The $\overline{OCx}$ open-drain output is asserted (active low) when an overcurrent or overtemperature shutdown condition is encountered after a 10-ms deglitch timeout. The output remains asserted until the overcurrent or overtemperature condition is removed. Connecting a heavy capacitive load to an enabled device can cause a momentary overcurrent condition; however, no false reporting on $\overline{OCx}$ occurs due to the 10-ms deglitch circuit. The TPS20xxB is designed to eliminate false overcurrent reporting. The internal overcurrent deglitch eliminates the need for external components to remove unwanted pulses. $\overline{OCx}$ is not deglitched when the switch is turned off due to an overtemperature shutdown.

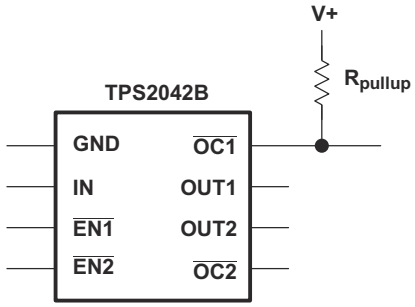

Figure 9-2. Typical Circuit for the $\overline{OC}$ Pin (Example, TPS2042B)

9.2.1.3 Application Curves

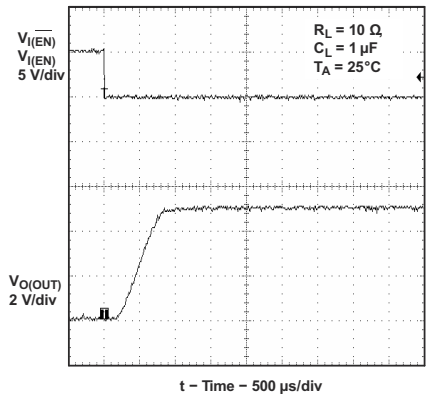

Figure 9-3. Turnon Delay and Rise Time With 1-µF Load

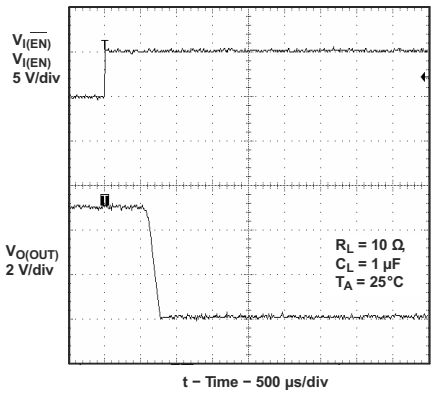

Figure 9-4. Turnoff Delay and Fall Time With 1-µF Load

Copyright © 2024 Texas Instruments Incorporated

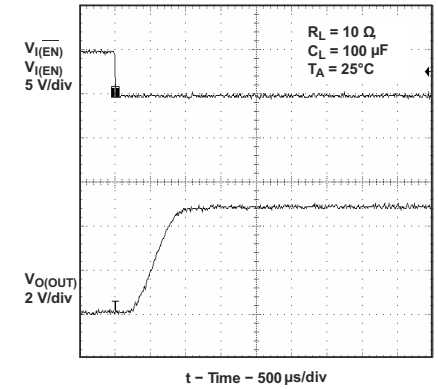

Figure 9-5. Turnon Delay and Rise Time With 100-µF Load

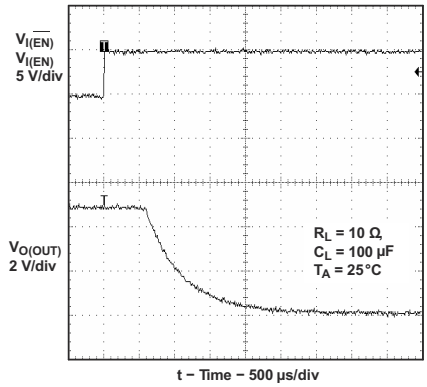

Figure 9-6. Turnoff Delay and Fall Time With 100-µF Load

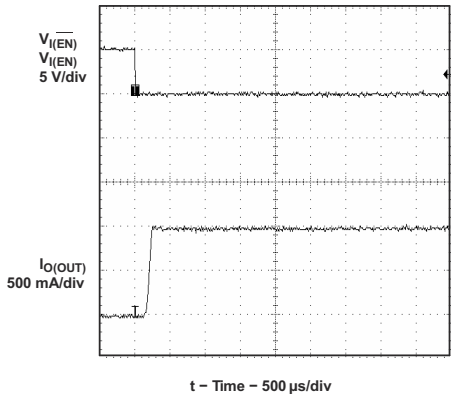

Figure 9-7. Short-Circuit Current, Device Enabled Into Short

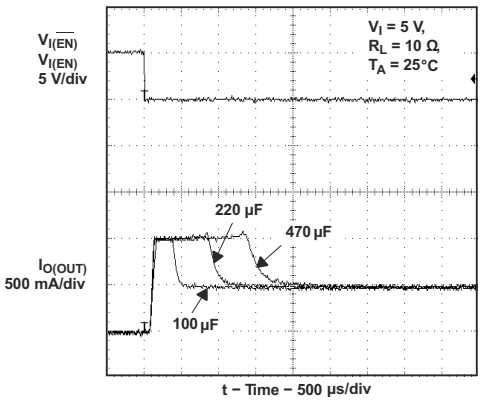

Figure 9-8. Inrush Current With Different Load Capacitance

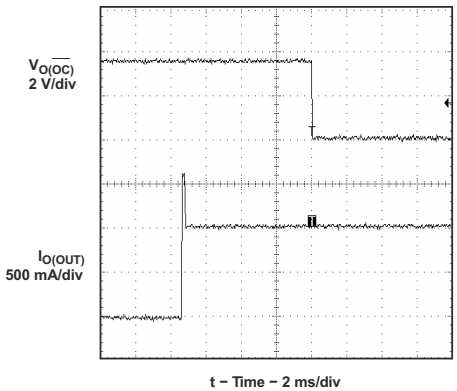

Figure 9-9. 3-Ω Load Connected to Enabled Device

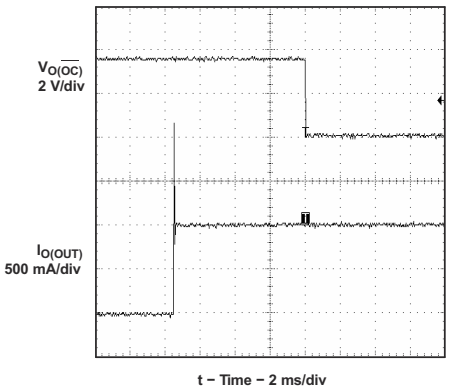

Figure 9-10. 2-Ω Load Connected to Enabled Device

9.2.2 Host and Self-Powered and Bus-Powered Hubs

Hosts and self-powered hubs have a local power supply that powers the embedded functions and the downstream ports (see Figure 9-11 and Figure 9-12). This power supply must provide from 5.25 V to 4.75 V to the board side of the downstream connection under full-load and no-load conditions. Hosts and SPHs are required to have current-limit protection and must report overcurrent conditions to the USB controller. Typical SPHs are desktop PCs, monitors, printers, and stand-alone hubs.

Copyright © 2024 Texas Instruments Incorporated

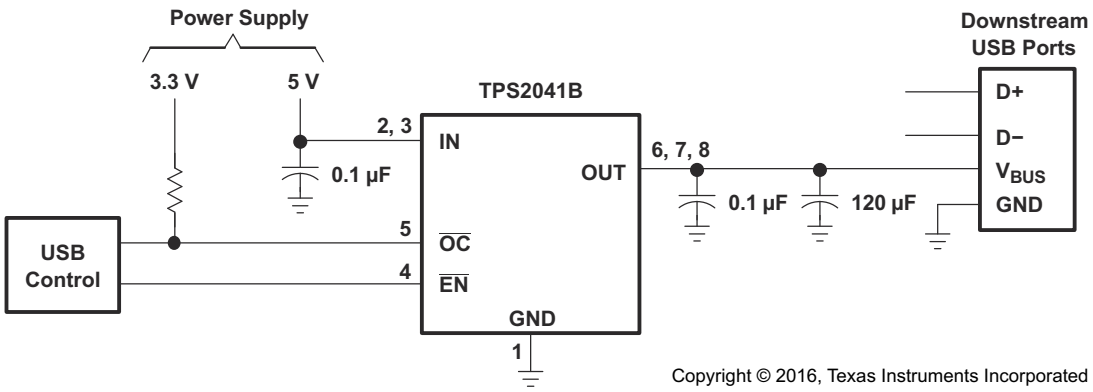

Figure 9-11. Typical One-Port USB Host and Self-Powered Hub

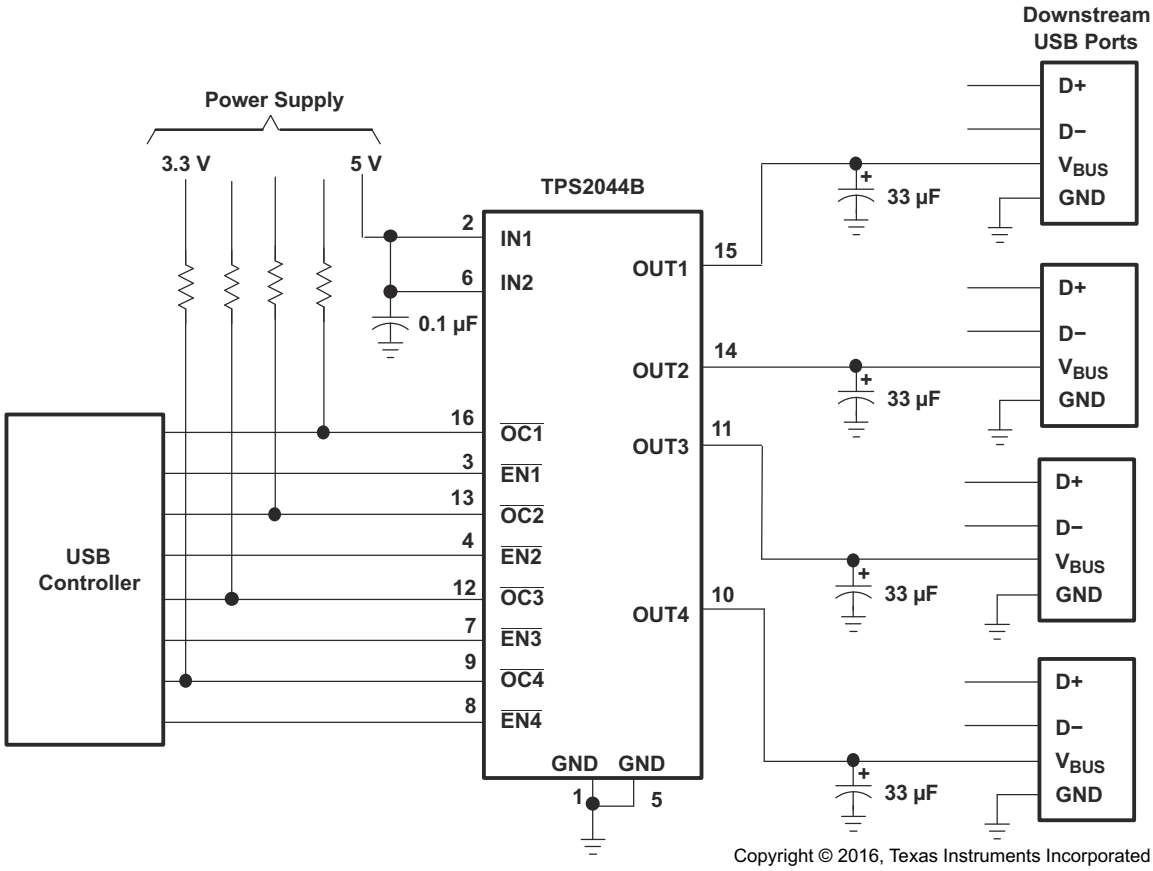

Figure 9-12. Typical Four-Port USB Host and Self-Powered Hub

9.2.2.1 Design Requirements

9.2.2.1.1 USB Power-Distribution Requirements

USB can be implemented in several ways, and, regardless of the type of USB device being developed, several power-distribution features must be implemented.

- Hosts and self-powered hubs must:
  - Current-limit downstream ports
  - Report overcurrent conditions on USB V_{BUS}
- Bus-powered hubs must:
  - Enable/disable power to downstream ports
  - Power up at <100 mA

Copyright © 2024 Texas Instruments Incorporated

  - Limit inrush current (<44 Ω and 10 µF)
- Functions must:
  - Limit inrush currents
  - Power up at <100 mA

The feature set of the TPS20xxB allows them to meet each of these requirements. The integrated current-limiting and overcurrent reporting is required by hosts and self-powered hubs. The logic-level enable and controlled rise times meet the need of both input and output ports on bus-powered hubs, as well as the input ports for bus-powered functions (see Figure 9-13 through Figure 9-16).

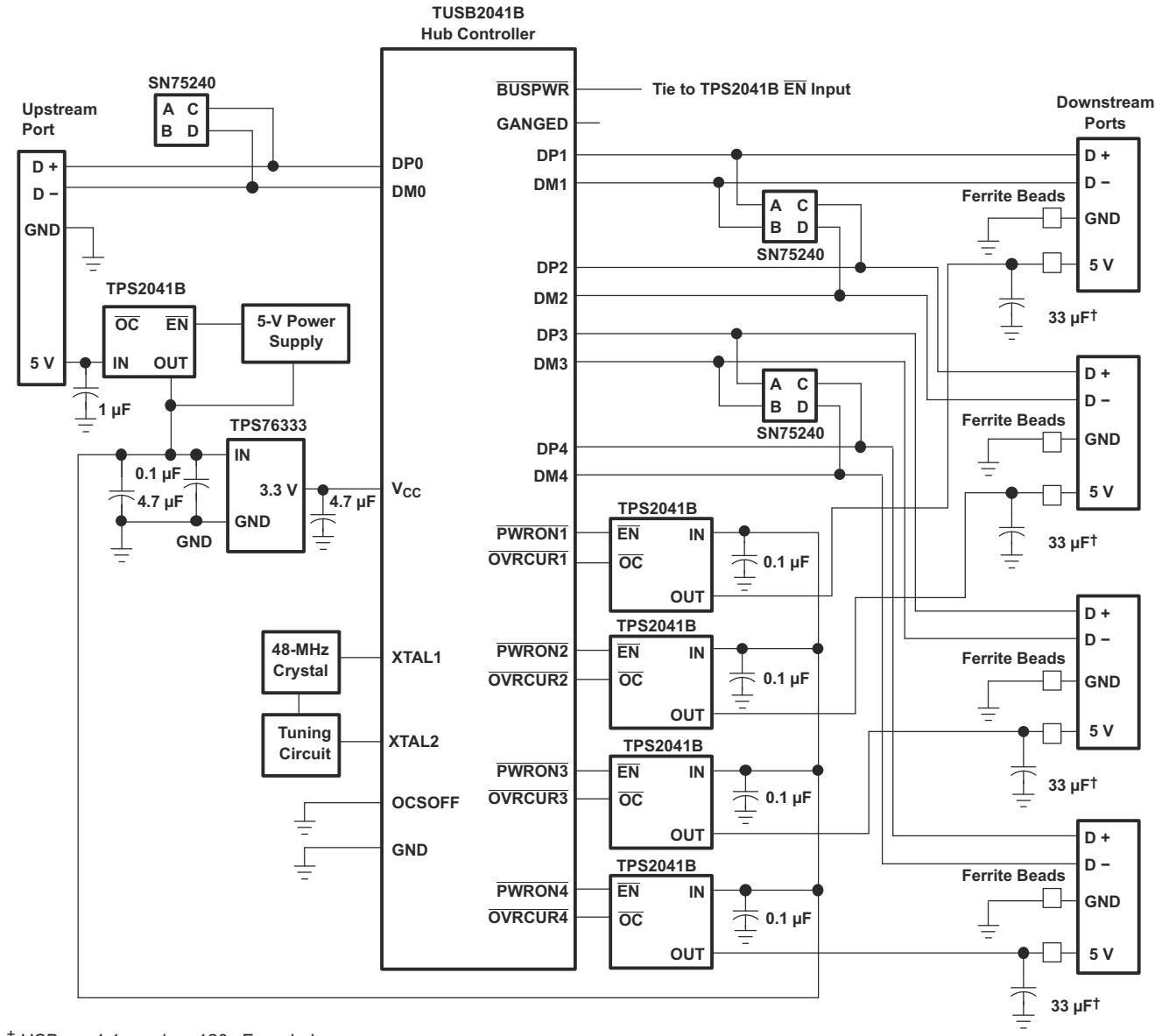

† USB rev 1.1 requires 120 µF per hub.

Copyright © 2016, Texas Instruments Incorporated

Figure 9-13. Hybrid Self and Bus-Powered Hub Implementation, TPS2041B and TPS2051B

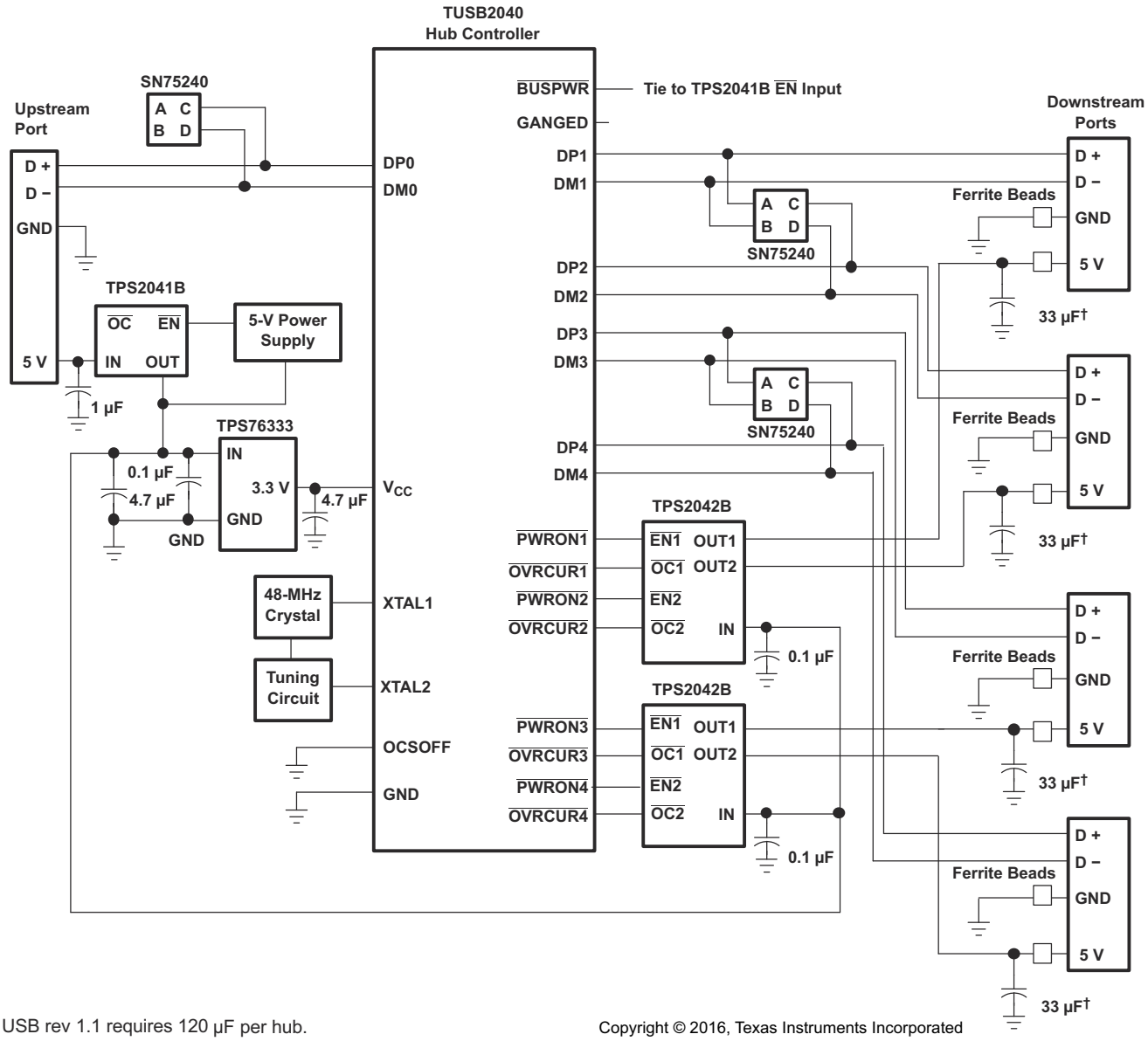

† USB rev 1.1 requires 120 µF per hub.

Copyright © 2016, Texas Instruments Incorporated

Figure 9-14. Hybrid Self and Bus-Powered Hub Implementation, TPS2042B and TPS2052B

Copyright © 2024 Texas Instruments Incorporated

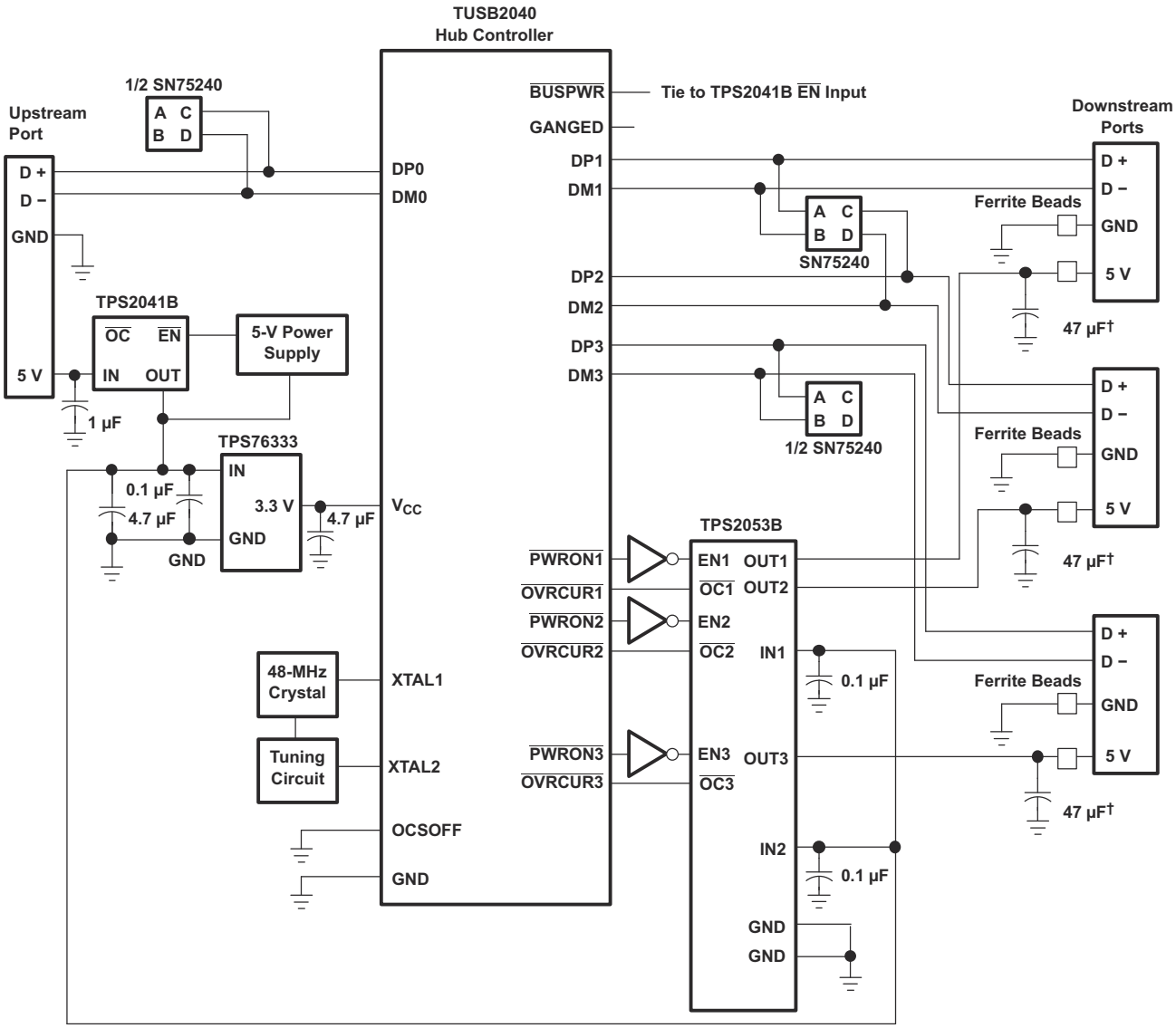

† USB rev 1.1 requires 120 µF per hub.

Copyright © 2016, Texas Instruments Incorporated

Figure 9-15. Hybrid Self and Bus-Powered Hub Implementation, TPS2043B and TPS2053B

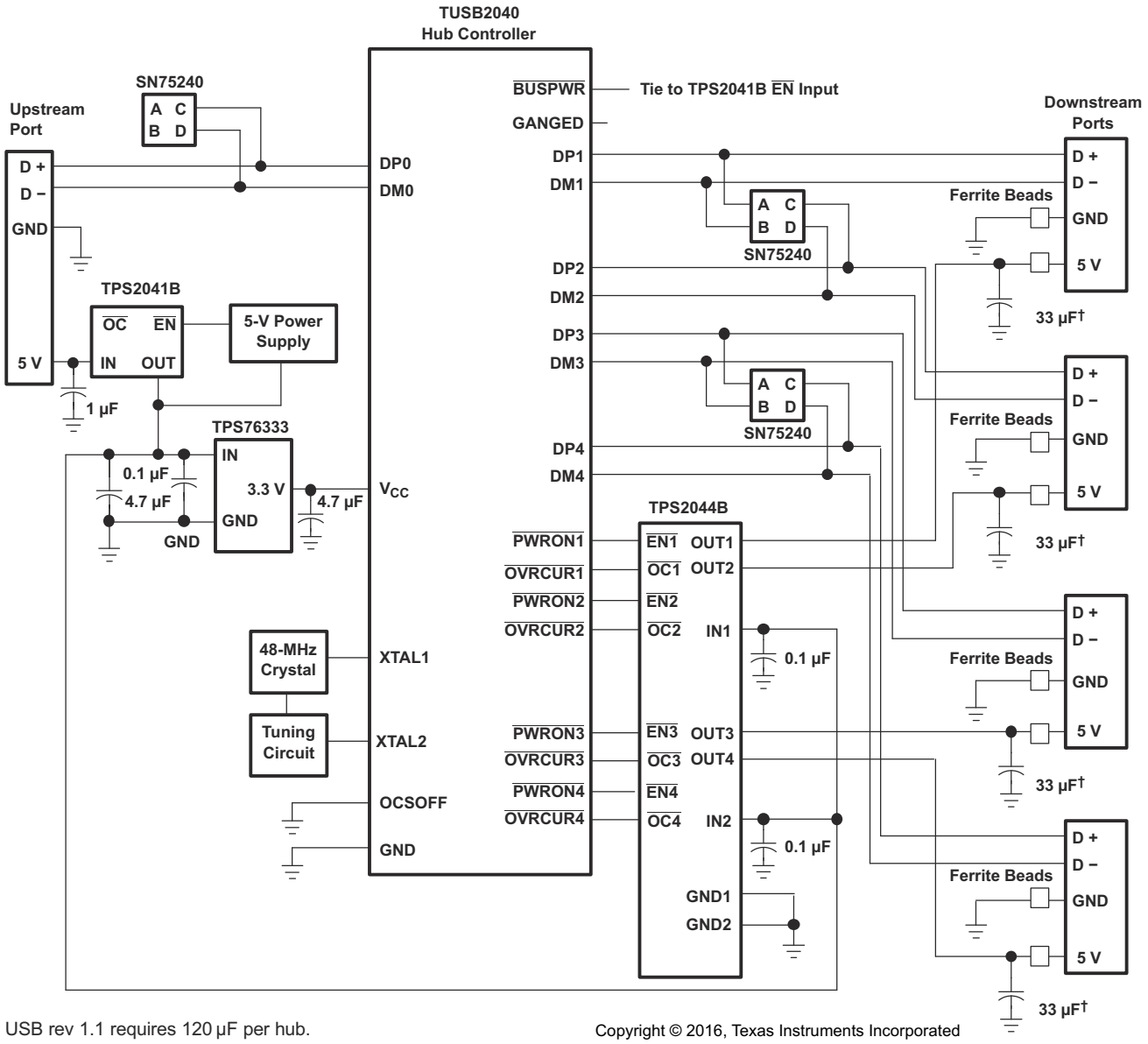

† USB rev 1.1 requires 120 µF per hub.

Figure 9-16. Hybrid Self and Bus-Powered Hub Implementation, TPS2044B and TPS2054B

9.2.2.2 Detailed Design Procedure

Bus-powered hubs obtain all power from upstream ports and often contain an embedded function. The hubs are required to power up with less than one unit load. The BPH usually has one embedded function, and power is always available to the controller of the hub. If the embedded function and hub require more than 100 mA on power up, the power to the embedded function may need to be kept off until enumeration is completed. This can be accomplished by removing power or by shutting off the clock to the embedded function. Power switching the embedded function is not necessary if the aggregate power draw for the function and controller is less than one unit load. The total current drawn by the bus-powered device is the sum of the current to the controller, the embedded function, and the downstream ports, and it is limited to 500 mA from an upstream port.

9.2.2.2.1 Low-Power Bus-Powered and High-Power Bus-Powered Functions

Both low-power and high-power bus-powered functions obtain all power from upstream ports; low-power functions always draw less than 100 mA; high-power functions must draw less than 100 mA at power up and can draw up to 500 mA after enumeration. If the load of the function is more than the parallel combination of 44 Ω and 10 µF at power up, the device must implement inrush current limiting (see Figure 9-17).

Copyright © 2024 Texas Instruments Incorporated

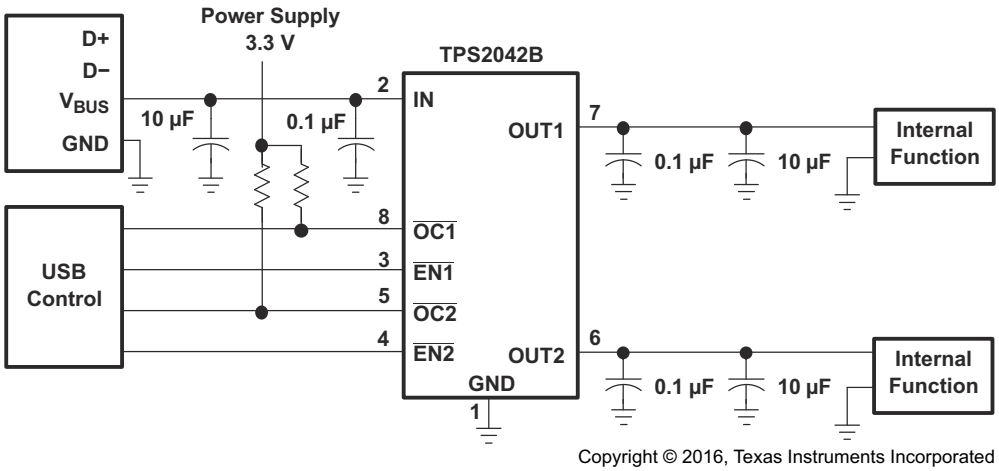

Figure 9-17. High-Power Bus-Powered Function (Example, TPS2042B)

9.2.2.3 Application Curves

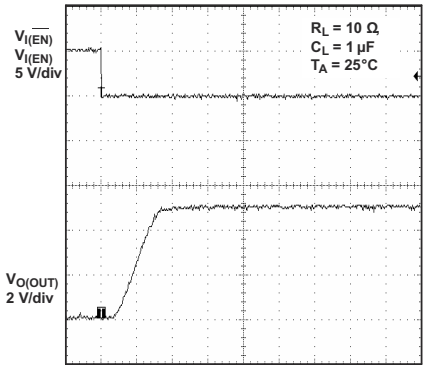

Figure 9-18. Turnon Delay and Rise Time With 1-µF Load

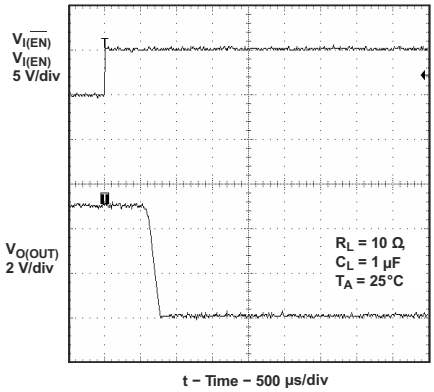

Figure 9-19. Turnoff Delay and Fall Time with 1-µF Load

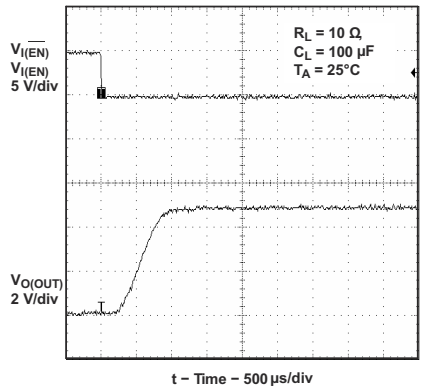

Figure 9-20. Turnon Delay and Rise Time With 100-µF Load

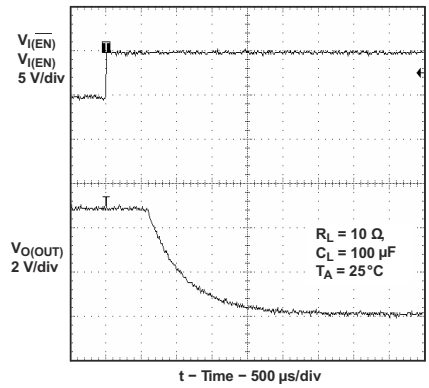

Figure 9-21. Turnoff Delay and Fall Time With 100-µF Load

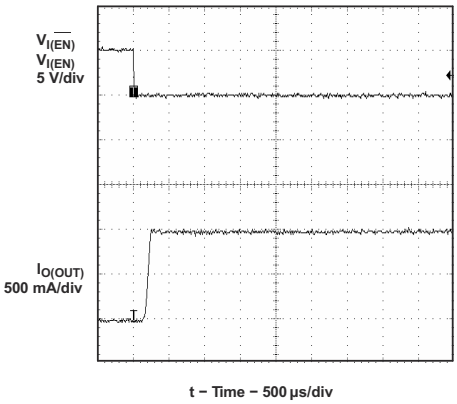

Figure 9-22. Short-Circuit Current, Device Enabled Into Short

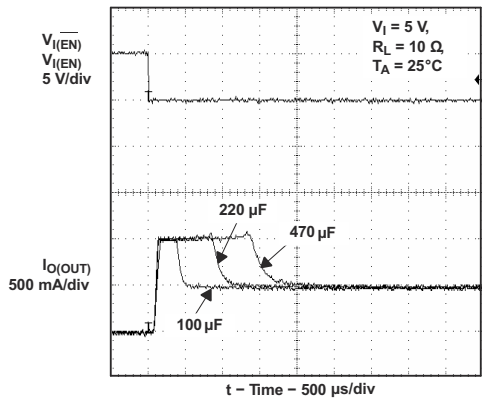

Figure 9-23. Inrush Current With Different Load Capacitance

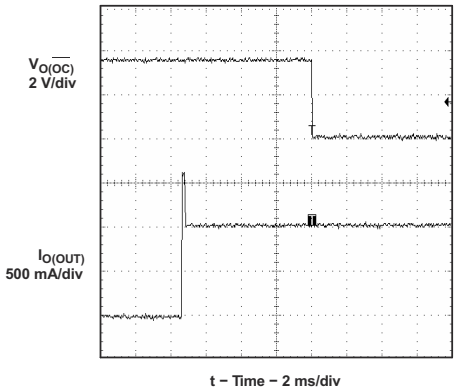

Figure 9-24. 3-Ω Load Connected to Enabled Device

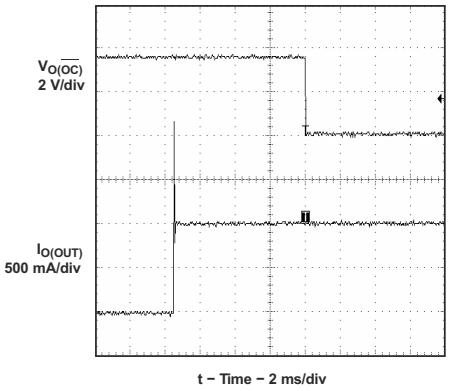

Figure 9-25. 2-Ω Load Connected to Enabled Device

9.2.3 Generic Hot-Plug Applications

In many applications it may be necessary to remove modules or pc boards while the main unit is still operating. These are considered hot-plug applications. Such implementations require the control of current surges seen by the main power supply and the card being inserted. The most effective way to control these surges is to limit and slowly ramp the current and voltage being applied to the card, similar to the way in which a power supply normally turns on. Due to the controlled rise times and fall times of the TPS20xxB, these devices can be used to provide a softer start-up to devices being hot-plugged into a powered system. The UVLO feature of the TPS20xxB also ensures that the switch is off after the card has been removed, and that the switch is off during the next insertion. The UVLO feature insures a soft start with a controlled rise time for every insertion of the card or module.

Copyright © 2024 Texas Instruments Incorporated

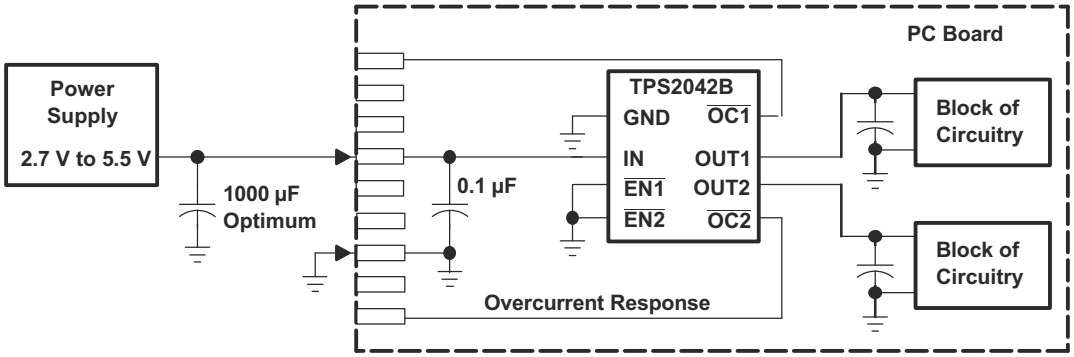

Copyright © 2016, Texas Instruments Incorporated

Figure 9-26. Typical Hot-Plug Implementation (Example, TPS2042B)

By placing the TPS20xxB between the V_{CC} input and the rest of the circuitry, the input power reaches these devices first after insertion. The typical rise time of the switch is approximately 1 ms, providing a slow voltage ramp at the output of the device. This implementation controls system surge currents and provides a hot-plugging mechanism for any device.

9.2.3.1 Design Requirements

Table 9-2 shows the design parameters for this application.

Table 9-2. Design Parameters

DESIGN PARAMETER	VALUE
Input voltage	5 V
Output1 voltage	5 V
Output2 voltage	5 V
Output1 current	0.5 A
Output2 current	0.5 A

9.2.3.2 Detailed Design Procedure

To begin the design process a few parameters must be decided upon. The designer needs to know the following:

- Normal Input Operation Voltage
- Current Limit

Input and output capacitance improves the performance of the device; the actual capacitance must be optimized for the particular application. For all applications, TI recommends a 0.1-µF or greater ceramic bypass capacitor between IN and GND, as close to the device as possible for local noise decoupling. This precaution reduces ringing on the input due to power-supply transients. Additional input capacitance may be needed on the input to reduce voltage undershoot from exceeding the UVLO of other load share one power rail with TPS2042 device or overshoot from exceeding the absolute-maximum voltage of the device during heavy transient conditions. Preventing voltage undershoots and overshoots is especially important during bench testing when long, inductive cables are used to connect the evaluation board to the bench power supply. Output capacitance is not required, but TI recommends placing a high-value electrolytic capacitor on the output pin when large transient currents are expected on the output to reduce the undershoot, which is caused by the inductance of the output power bus just after a short has occurred and the TPS2042 device has abruptly reduced OUT current. Energy stored in the inductance drives the OUT voltage down and potentially negative as it discharges.

9.2.3.3 Application Curves

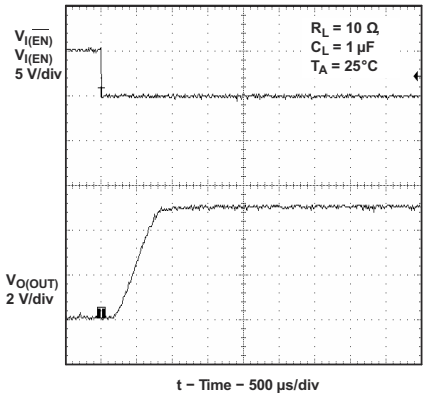

Figure 9-27. Turnon Delay and Rise Time With 1-µF Load

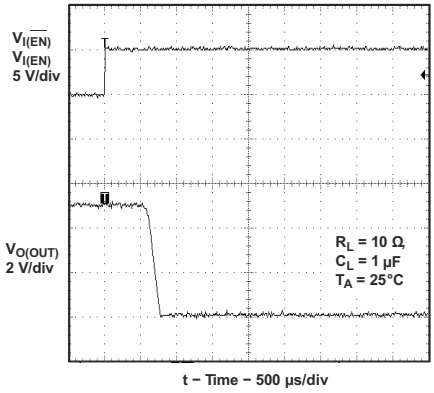

Figure 9-28. Turnoff Delay and Fall Time With 1-µF Load

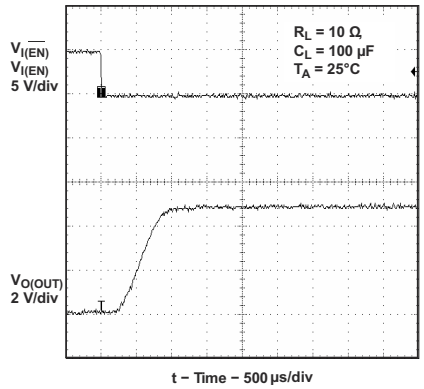

Figure 9-29. Turnon Delay and Rise Time With 100-µF Load

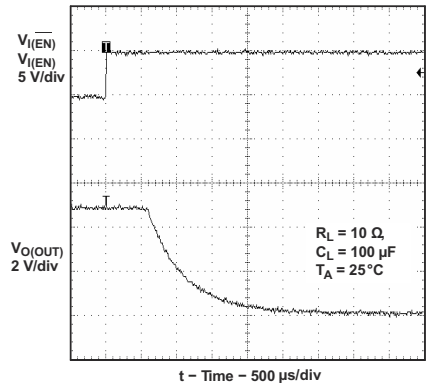

Figure 9-30. Turnoff Delay and Fall Time With 100-µF Load

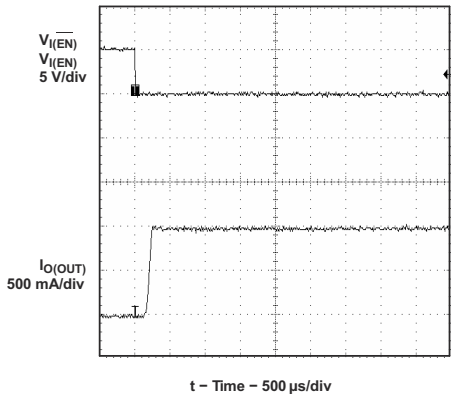

Figure 9-31. Short-Circuit Current, Device Enabled Into Short

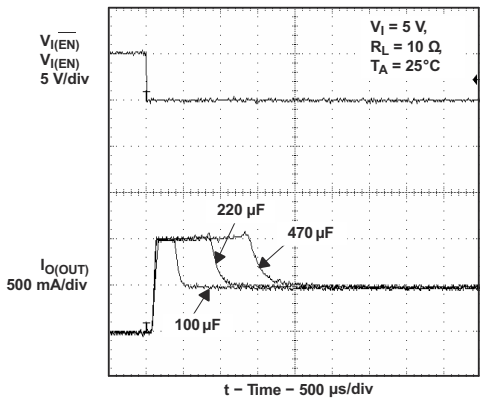

Figure 9-32. Inrush Current With Different Load Capacitance

Copyright © 2024 Texas Instruments Incorporated

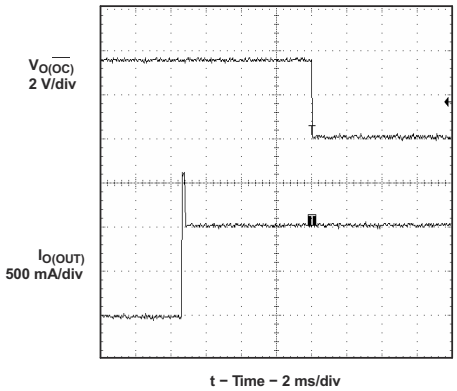

Figure 9-33. 3-Ω Load Connected to Enabled Device

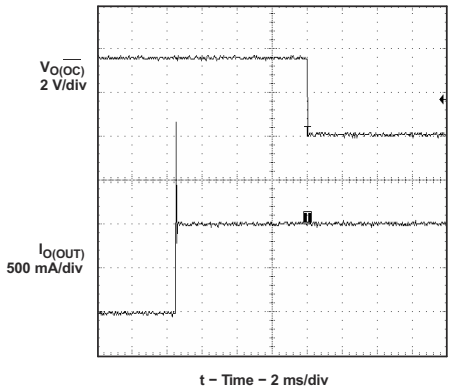

Figure 9-34. 2-Ω Load Connected to Enabled Device

10 Power Supply Recommendations

10.1 Undervoltage Lockout (UVLO)

An undervoltage lockout ensures that the power switch is in the off state at power up. Whenever the input voltage falls below approximately 2 V, the power switch is quickly turned off. The UVLO facilitates the design of hot-insertion systems where it is not possible to turn off the power switch before input power is removed. The UVLO also keeps the switch from being turned on until the power supply has reached at least 2 V, even if the switch is enabled. On reinsertion, the power switch is turned on, with a controlled rise time to reduce EMI and voltage overshoots.

Copyright © 2024 Texas Instruments Incorporated

11 Layout

11.1 Layout Guidelines

- Place the 100-nF bypass capacitor near the IN and GND pins, and make the connections using a low-inductance trace.
- Placing a high-value electrolytic capacitor and a 100-nF bypass capacitor on the output pin is recommended when large transient currents are expected on the output.
- The PowerPAD must be directly connected to PCB ground plane using wide and short copper trace.

11.2 Layout Example

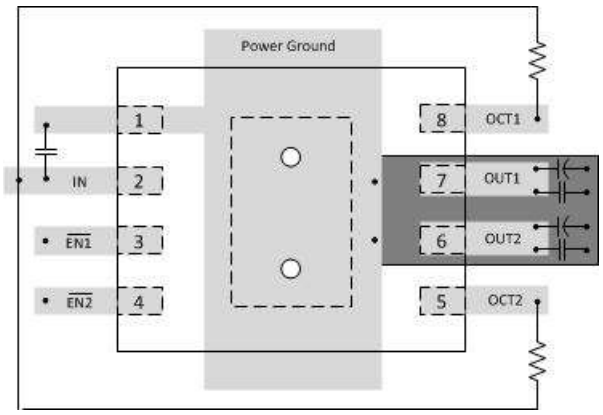

Figure 11-1. Layout Recommendation

11.3 Power Dissipation

The low on-resistance on the N-channel MOSFET allows the small surface-mount packages to pass large currents. The thermal resistances of these packages are high compared to those of power packages; it is good design practice to check power dissipation and junction temperature. Begin by determining the $r_{DS(on)}$ of the N-channel MOSFET relative to the input voltage and operating temperature. As an initial estimate, use the highest operating ambient temperature of interest and read $r_{DS(on)}$ from Figure 6-11. Using this value, the power dissipation per switch can be calculated by Equation:

$$P_D = r_{DS(on)} \times I^2$$

Multiply this number by the number of switches being used. This step renders the total power dissipation from the N-channel MOSFETs.

Finally, calculate the junction temperature with Equation:

$$T_J = P_D \times R_{\theta JA} + T_A$$

where

- T_A= Ambient temperature °C
- $R_{\theta JA}$ = Thermal resistance
- P_D = Total power dissipation based on number of switches being used.

Compare the calculated junction temperature with the initial estimate. If they do not agree within a few degrees, repeat the calculation, using the calculated value as the new estimate. Two or three iterations are generally sufficient to get a reasonable answer.

11.4 Thermal Protection

Thermal protection prevents damage to the IC when heavy-overload or short-circuit faults are present for extended periods of time. The TPS20xxB implements a thermal sensing to monitor the operating junction

Copyright © 2024 Texas Instruments Incorporated

temperature of the power distribution switch. In an overcurrent or short-circuit condition, the junction temperature rises due to excessive power dissipation. Once the die temperature rises to approximately 140°C due to overcurrent conditions, the internal thermal sense circuitry turns the power switch off, thus preventing the power switch from damage. Hysteresis is built into the thermal sense circuit, and after the device has cooled approximately 10°C, the switch turns back on. The switch continues to cycle in this manner until the load fault or input power is removed. The $\overline{OC}$x open-drain output is asserted (active low) when an overtemperature shutdown or overcurrent occurs.

Copyright © 2024 Texas Instruments Incorporated

12 Device and Documentation Support

12.1 Receiving Notification of Documentation Updates

To receive notification of documentation updates, navigate to the device product folder on ti.com. Click on *Notifications* to register and receive a weekly digest of any product information that has changed. For change details, review the revision history included in any revised document.

12.2 Support Resources

TI E2E™ support forums are an engineer's go-to source for fast, verified answers and design help — straight from the experts. Search existing answers or ask your own question to get the quick design help you need.

Linked content is provided "AS IS" by the respective contributors. They do not constitute TI specifications and do not necessarily reflect TI's views; see TI's Terms of Use.

12.3 Trademarks

TI E2E™ is a trademark of Texas Instruments.
All trademarks are the property of their respective owners.

12.4 Electrostatic Discharge Caution

This integrated circuit can be damaged by ESD. Texas Instruments recommends that all integrated circuits be handled with appropriate precautions. Failure to observe proper handling and installation procedures can cause damage.

ESD damage can range from subtle performance degradation to complete device failure. Precision integrated circuits may be more susceptible to damage because very small parametric changes could cause the device not to meet its published specifications.

12.5 Glossary

TI Glossary	This glossary lists and explains terms, acronyms, and definitions.

13 Revision History

NOTE: Page numbers for previous revisions may differ from page numbers in the current version.

Changes from Revision O (June 2024) to Revision P (August 2024)	Page
• Removed revision history comment about adding TPS2051BDB to this section	21

Changes from Revision N (July 2023) to Revision O (June 2024)	Page
• Updated origination date from June 2010 to April 2004 to match initial release of the data sheet	1
• Deleted Dissipation Ratings table	1
• Deleted "TPS2042xx and TPS2053xx" in table title	6
• Updated max UVLO and Supply current, high-level output values for the TPS2041BDR, TPS2041BDGNR, TPS2042BDR, TPS2042BDGNR, TPS2051BDR, TPS2051BDGNR, TPS2052BDGNR, and TPS2041BDBVR	7
• Updated Overcurrent trip threshold to apply only to TPS2042B and TPS2052B (DRB packages only)	7
• Updated Section 8.3.7to show that the TPS20x1B and TPS20x2B devices in the D, DGN, and DBV packages do not have overcurrent trip thresholds	21
• Updated Section 8.3.7.1	22
• Updated Section 8.3.7.2	22

Changes from Revision M (June 2016) to Revision N (July 2023)	Page
• Updated the numbering format for tables, figures, and cross-references throughout the document	1

- Update TPS2051BDBV and TPS2052BD electrical characteristics, including overcurrent trip threshold, high-level output supply current and undervoltage lockout..... 7

Changes from Revision L (June 2011) to Revision M (June 2016) **Page**

- Added *ESD Ratings* table, *Feature Description* section, *Device Functional Modes*, *Application and Implementation* section, *Power Supply Recommendations* section, *Layout* section, *Device and Documentation Support* section, and *Mechanical, Packaging, and Orderable Information* section 6

14 Mechanical, Packaging, and Orderable Information

The following pages include mechanical, packaging, and orderable information. This information is the most current data available for the designated devices. This data is subject to change without notice and revision of this document. For browser-based versions of this data sheet, refer to the left-hand navigation.

Copyright © 2024 Texas Instruments Incorporated

PACKAGING INFORMATION

Orderable Device	Status (1)	Package Type	Package Drawing	Pins	Package Qty	Eco Plan (2)	Lead finish/ Ball material (6)	MSL Peak Temp (3)	Op Temp (°C)	Device Marking (4/5)	Samples
TPS2041BD	ACTIVE	SOIC	D	8	75	RoHS & Green	NIPDAU	Level-1-260C-UNLIM	-40 to 125	2041B	Samples
TPS2041BDBVR	ACTIVE	SOT-23	DBV	5	3000	RoHS & Green	NIPDAU	Level-1-260C-UNLIM	-40 to 125	PLII	Samples
TPS2041BDBVRG4	ACTIVE	SOT-23	DBV	5	3000	RoHS & Green	NIPDAU	Level-1-260C-UNLIM	-40 to 125	PLII	Samples
TPS2041BDBVT	ACTIVE	SOT-23	DBV	5	250	RoHS & Green	NIPDAU	Level-1-260C-UNLIM	-40 to 125	PLII	Samples
TPS2041BDBVTG4	ACTIVE	SOT-23	DBV	5	250	RoHS & Green	NIPDAU	Level-1-260C-UNLIM	-40 to 125	PLII	Samples
TPS2041BDG4	ACTIVE	SOIC	D	8	75	RoHS & Green	NIPDAU	Level-1-260C-UNLIM	-40 to 125	2041B	Samples
TPS2041BDGN	ACTIVE	HVSSOP	DGN	8	80	RoHS & Green	NIPDAU | NIPDAUAG	Level-1-260C-UNLIM	-40 to 125	2041B	Samples
TPS2041BDGNG4	ACTIVE	HVSSOP	DGN	8	80	RoHS & Green	NIPDAU	Level-1-260C-UNLIM	-40 to 125	2041B	Samples
TPS2041BDGNR	ACTIVE	HVSSOP	DGN	8	2500	RoHS & Green	NIPDAU | NIPDAUAG	Level-1-260C-UNLIM	-40 to 125	2041B	Samples
TPS2041BDR	ACTIVE	SOIC	D	8	2500	RoHS & Green	NIPDAU	Level-1-260C-UNLIM	-40 to 125	2041B	Samples
TPS2041BDRG4	ACTIVE	SOIC	D	8	2500	RoHS & Green	NIPDAU	Level-1-260C-UNLIM	-40 to 125	2041B	Samples
TPS2042BD	ACTIVE	SOIC	D	8	75	RoHS & Green	NIPDAU	Level-1-260C-UNLIM	-40 to 125	2042B	Samples
TPS2042BDGN	ACTIVE	HVSSOP	DGN	8	80	RoHS & Green	NIPDAU	Level-1-260C-UNLIM	-40 to 125	2042B	Samples
TPS2042BDGNG4	ACTIVE	HVSSOP	DGN	8	80	RoHS & Green	NIPDAU	Level-1-260C-UNLIM	-40 to 125	2042B	Samples
TPS2042BDGNR	ACTIVE	HVSSOP	DGN	8	2500	RoHS & Green	NIPDAU	Level-1-260C-UNLIM	-40 to 125	2042B	Samples
TPS2042BDGNRG4	ACTIVE	HVSSOP	DGN	8	2500	RoHS & Green	NIPDAU	Level-1-260C-UNLIM	-40 to 125	2042B	Samples
TPS2042BDR	ACTIVE	SOIC	D	8	2500	RoHS & Green	NIPDAU	Level-1-260C-UNLIM	-40 to 125	2042B	Samples
TPS2042BDRBR	ACTIVE	SON	DRB	8	3000	RoHS & Green	NIPDAU	Level-1-260C-UNLIM	-40 to 125	2042	Samples
TPS2042BDRBT	ACTIVE	SON	DRB	8	250	RoHS & Green	NIPDAU	Level-1-260C-UNLIM	-40 to 125	2042	Samples
TPS2042BDRG4	ACTIVE	SOIC	D	8	2500	RoHS & Green	NIPDAU	Level-1-260C-UNLIM	-40 to 125	2042B	Samples

Orderable Device	Status (1)	Package Type	Package Drawing	Pins	Package Qty	Eco Plan (2)	Lead finish/ Ball material (6)	MSL Peak Temp (3)	Op Temp (°C)	Device Marking (4/5)	Samples
TPS2043BD	ACTIVE	SOIC	D	16	40	RoHS & Green	NIPDAU	Level-1-260C-UNLIM	-40 to 125	2043B	Samples
TPS2043BDR	ACTIVE	SOIC	D	16	2500	RoHS & Green	NIPDAU	Level-1-260C-UNLIM	-40 to 125	2043B	Samples
TPS2043BDRG4	ACTIVE	SOIC	D	16	2500	RoHS & Green	NIPDAU	Level-1-260C-UNLIM	-40 to 125	2043B	Samples
TPS2044BD	ACTIVE	SOIC	D	16	40	RoHS & Green	NIPDAU	Level-1-260C-UNLIM	-40 to 125	2044B	Samples
TPS2044BDG4	ACTIVE	SOIC	D	16	40	RoHS & Green	NIPDAU	Level-1-260C-UNLIM	-40 to 125	2044B	Samples
TPS2044BDR	ACTIVE	SOIC	D	16	2500	RoHS & Green	NIPDAU	Level-1-260C-UNLIM	-40 to 125	2044B	Samples
TPS2044BDRG4	ACTIVE	SOIC	D	16	2500	RoHS & Green	NIPDAU	Level-1-260C-UNLIM	-40 to 125	2044B	Samples
TPS2051BD	ACTIVE	SOIC	D	8	75	RoHS & Green	NIPDAU	Level-1-260C-UNLIM	-40 to 125	2051B	Samples
TPS2051BDBVR	ACTIVE	SOT-23	DBV	5	3000	RoHS & Green	NIPDAU | SN	Level-1-260C-UNLIM	-40 to 125	PLJI	Samples
TPS2051BDG4	ACTIVE	SOIC	D	8	75	RoHS & Green	NIPDAU	Level-1-260C-UNLIM	-40 to 125	2051B	Samples
TPS2051BDGN	ACTIVE	HVSSOP	DGN	8	80	RoHS & Green	NIPDAU | NIPDAUAG	Level-1-260C-UNLIM	-40 to 125	2051B	Samples
TPS2051BDGNG4	ACTIVE	HVSSOP	DGN	8	80	RoHS & Green	NIPDAU	Level-1-260C-UNLIM	-40 to 125	2051B	Samples
TPS2051BDGNR	ACTIVE	HVSSOP	DGN	8	2500	RoHS & Green	NIPDAU | NIPDAUAG	Level-1-260C-UNLIM	-40 to 125	2051B	Samples
TPS2051BDGNRG4	ACTIVE	HVSSOP	DGN	8	2500	RoHS & Green	NIPDAU	Level-1-260C-UNLIM	-40 to 125	2051B	Samples
TPS2051BDR	ACTIVE	SOIC	D	8	2500	RoHS & Green	NIPDAU	Level-1-260C-UNLIM	-40 to 125	2051B	Samples
TPS2051BDRG4	ACTIVE	SOIC	D	8	2500	RoHS & Green	NIPDAU	Level-1-260C-UNLIM	-40 to 125	2051B	Samples
TPS2052BDGN	ACTIVE	HVSSOP	DGN	8	80	RoHS & Green	NIPDAU | NIPDAUAG	Level-1-260C-UNLIM	-40 to 125	2052B	Samples
TPS2052BDGNG4	ACTIVE	HVSSOP	DGN	8	80	RoHS & Green	NIPDAU	Level-1-260C-UNLIM	-40 to 125	2052B	Samples
TPS2052BDGNR	ACTIVE	HVSSOP	DGN	8	2500	RoHS & Green	NIPDAU	Level-1-260C-UNLIM	-40 to 125	2052B	Samples
TPS2052BDGNRG4	ACTIVE	HVSSOP	DGN	8	2500	RoHS & Green	NIPDAU	Level-1-260C-UNLIM	-40 to 125	2052B	Samples
TPS2052BDR	ACTIVE	SOIC	D	8	2500	RoHS & Green	NIPDAU	Level-1-260C-UNLIM	-40 to 125	2052B	Samples

Orderable Device	Status (1)	Package Type	Package Drawing	Pins	Package Qty	Eco Plan (2)	Lead finish/ Ball material (6)	MSL Peak Temp (3)	Op Temp (°C)	Device Marking (4/5)	Samples
TPS2052BDRBR	ACTIVE	SON	DRB	8	3000	RoHS & Green	NIPDAU	Level-1-260C-UNLIM	-40 to 125	2052	Samples
TPS2052BDRBT	ACTIVE	SON	DRB	8	250	RoHS & Green	NIPDAU	Level-1-260C-UNLIM	-40 to 85	2052	Samples
TPS2053BD	ACTIVE	SOIC	D	16	40	RoHS & Green	NIPDAU	Level-1-260C-UNLIM	-40 to 125	2053B	Samples
TPS2053BDR	ACTIVE	SOIC	D	16	2500	RoHS & Green	NIPDAU	Level-1-260C-UNLIM	-40 to 125	2053B	Samples
TPS2054BD	ACTIVE	SOIC	D	16	40	RoHS & Green	NIPDAU	Level-1-260C-UNLIM	-40 to 125	2054B	Samples
TPS2054BDR	ACTIVE	SOIC	D	16	2500	RoHS & Green	NIPDAU	Level-1-260C-UNLIM	-40 to 125	2054B	Samples

(1) The marketing status values are defined as follows:
ACTIVE: Product device recommended for new designs.
LIFEBUY: TI has announced that the device will be discontinued, and a lifetime-buy period is in effect.
NRND: Not recommended for new designs. Device is in production to support existing customers, but TI does not recommend using this part in a new design.
PREVIEW: Device has been announced but is not in production. Samples may or may not be available.
OBSOLETE: TI has discontinued the production of the device.

(2) **RoHS:** TI defines "RoHS" to mean semiconductor products that are compliant with the current EU RoHS requirements for all 10 RoHS substances, including the requirement that RoHS substance do not exceed 0.1% by weight in homogeneous materials. Where designed to be soldered at high temperatures, "RoHS" products are suitable for use in specified lead-free processes. TI may reference these types of products as "Pb-Free".
RoHS Exempt: TI defines "RoHS Exempt" to mean products that contain lead but are compliant with EU RoHS pursuant to a specific EU RoHS exemption.
Green: TI defines "Green" to mean the content of Chlorine (Cl) and Bromine (Br) based flame retardants meet JS709B low halogen requirements of <=1000ppm threshold. Antimony trioxide based flame retardants must also meet the <=1000ppm threshold requirement.

(3) MSL, Peak Temp. - The Moisture Sensitivity Level rating according to the JEDEC industry standard classifications, and peak solder temperature.

(4) There may be additional marking, which relates to the logo, the lot trace code information, or the environmental category on the device.

(5) Multiple Device Markings will be inside parentheses. Only one Device Marking contained in parentheses and separated by a "~" will appear on a device. If a line is indented then it is a continuation of the previous line and the two combined represent the entire Device Marking for that device.

(6) Lead finish/Ball material - Orderable Devices may have multiple material finish options. Finish options are separated by a vertical ruled line. Lead finish/Ball material values may wrap to two lines if the finish value exceeds the maximum column width.

Important Information and Disclaimer: The information provided on this page represents TI's knowledge and belief as of the date that it is provided. TI bases its knowledge and belief on information provided by third parties, and makes no representation or warranty as to the accuracy of such information. Efforts are underway to better integrate information from third parties. TI has taken and continues to take reasonable steps to provide representative and accurate information but may not have conducted destructive testing or chemical analysis on incoming materials and chemicals. TI and TI suppliers consider certain information to be proprietary, and thus CAS numbers and other limited information may not be available for release.

In no event shall TI's liability arising out of such information exceed the total purchase price of the TI part(s) at issue in this document sold by TI to Customer on an annual basis.

OTHER QUALIFIED VERSIONS OF TPS2041B, TPS2042B, TPS2051B :

- Automotive : TPS2041B-Q1, TPS2042B-Q1, TPS2051B-Q1
- Enhanced Product : TPS2041B-EP

NOTE: Qualified Version Definitions:

- Automotive - Q100 devices qualified for high-reliability automotive applications targeting zero defects
- Enhanced Product - Supports Defense, Aerospace and Medical Applications

TAPE AND REEL INFORMATION

REEL DIMENSIONS

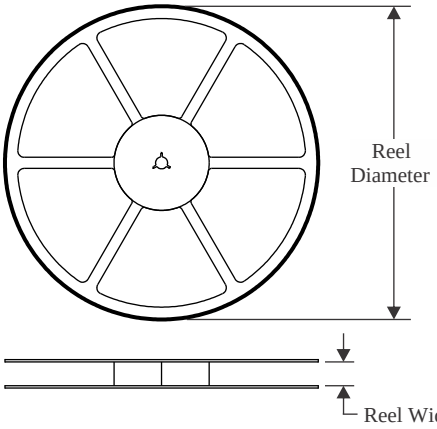

TAPE DIMENSIONS

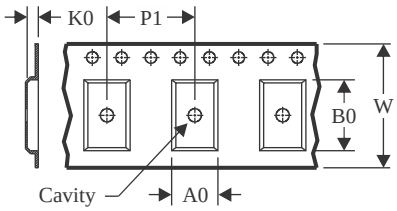

A0	Dimension designed to accommodate the component width
B0	Dimension designed to accommodate the component length
K0	Dimension designed to accommodate the component thickness
W	Overall width of the carrier tape
P1	Pitch between successive cavity centers

QUADRANT ASSIGNMENTS FOR PIN 1 ORIENTATION IN TAPE

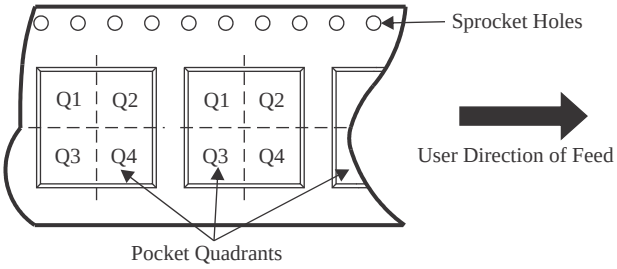

*All dimensions are nominal

Device	Package Type	Package Drawing	Pins	SPQ	Reel Diameter (mm)	Reel Width W1 (mm)	A0 (mm)	B0 (mm)	K0 (mm)	P1 (mm)	W (mm)	Pin1 Quadrant
TPS2041BDBVR	SOT-23	DBV	5	3000	178.0	9.0	3.23	3.17	1.37	4.0	8.0	Q3
TPS2041BDBVR	SOT-23	DBV	5	3000	179.0	8.4	3.2	3.2	1.4	4.0	8.0	Q3
TPS2041BDBVT	SOT-23	DBV	5	250	178.0	9.0	3.23	3.17	1.37	4.0	8.0	Q3
TPS2041BDBVT	SOT-23	DBV	5	250	180.0	8.4	3.2	3.2	1.4	4.0	8.0	Q3
TPS2041BDGNR	HVSSOP	DGN	8	2500	330.0	12.4	5.3	3.3	1.3	8.0	12.0	Q1
TPS2041BDGNR	HVSSOP	DGN	8	2500	330.0	12.4	5.3	3.4	1.4	8.0	12.0	Q1
TPS2041BDR	SOIC	D	8	2500	330.0	12.4	6.4	5.2	2.1	8.0	12.0	Q1
TPS2042BDGNR	HVSSOP	DGN	8	2500	330.0	12.4	5.3	3.3	1.3	8.0	12.0	Q1
TPS2042BDR	SOIC	D	8	2500	330.0	12.4	6.4	5.2	2.1	8.0	12.0	Q1
TPS2042BDRBR	SON	DRB	8	3000	330.0	12.4	3.3	3.3	1.0	8.0	12.0	Q2
TPS2042BDRBT	SON	DRB	8	250	180.0	12.4	3.3	3.3	1.0	8.0	12.0	Q2
TPS2043BDR	SOIC	D	16	2500	330.0	16.4	6.5	10.3	2.1	8.0	16.0	Q1
TPS2044BDR	SOIC	D	16	2500	330.0	16.4	6.5	10.3	2.1	8.0	16.0	Q1
TPS2051BDBVR	SOT-23	DBV	5	3000	180.0	8.4	3.2	3.2	1.4	4.0	8.0	Q3
TPS2051BDGNR	HVSSOP	DGN	8	2500	330.0	12.4	5.3	3.4	1.4	8.0	12.0	Q1
TPS2051BDGNR	HVSSOP	DGN	8	2500	330.0	12.4	5.3	3.3	1.3	8.0	12.0	Q1

Device	Package Type	Package Drawing	Pins	SPQ	Reel Diameter (mm)	Reel Width W1 (mm)	A0 (mm)	B0 (mm)	K0 (mm)	P1 (mm)	W (mm)	Pin1 Quadrant
TPS2051BDR	SOIC	D	8	2500	330.0	12.4	6.4	5.2	2.1	8.0	12.0	Q1
TPS2052BDGNR	HVSSOP	DGN	8	2500	330.0	12.4	5.3	3.3	1.3	8.0	12.0	Q1
TPS2052BDR	SOIC	D	8	2500	330.0	12.4	6.4	5.2	2.1	8.0	12.0	Q1
TPS2052BDRBR	SON	DRB	8	3000	330.0	12.4	3.3	3.3	1.0	8.0	12.0	Q2
TPS2052BDRBT	SON	DRB	8	250	180.0	12.4	3.3	3.3	1.0	8.0	12.0	Q2
TPS2053BDR	SOIC	D	16	2500	330.0	16.4	6.5	10.3	2.1	8.0	16.0	Q1
TPS2054BDR	SOIC	D	16	2500	330.0	16.4	6.5	10.3	2.1	8.0	16.0	Q1

TAPE AND REEL BOX DIMENSIONS

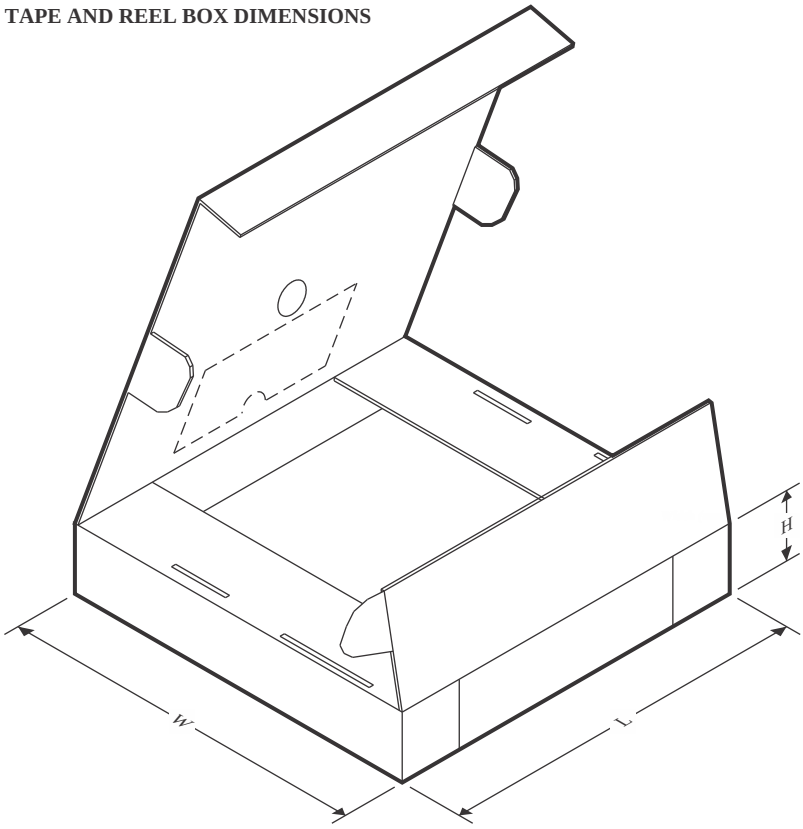

*All dimensions are nominal

Device	Package Type	Package Drawing	Pins	SPQ	Length (mm)	Width (mm)	Height (mm)
TPS2041BDBVR	SOT-23	DBV	5	3000	180.0	180.0	18.0
TPS2041BDBVR	SOT-23	DBV	5	3000	200.0	183.0	25.0
TPS2041BDBVT	SOT-23	DBV	5	250	180.0	180.0	18.0
TPS2041BDBVT	SOT-23	DBV	5	250	200.0	183.0	25.0
TPS2041BDGNR	HVSSOP	DGN	8	2500	346.0	346.0	35.0
TPS2041BDGNR	HVSSOP	DGN	8	2500	364.0	364.0	27.0
TPS2041BDR	SOIC	D	8	2500	340.5	338.1	20.6
TPS2042BDGNR	HVSSOP	DGN	8	2500	346.0	346.0	35.0
TPS2042BDR	SOIC	D	8	2500	340.5	338.1	20.6
TPS2042BDRBR	SON	DRB	8	3000	346.0	346.0	35.0
TPS2042BDRBT	SON	DRB	8	250	200.0	183.0	25.0
TPS2043BDR	SOIC	D	16	2500	340.5	336.1	32.0
TPS2044BDR	SOIC	D	16	2500	340.5	336.1	32.0
TPS2051BDBVR	SOT-23	DBV	5	3000	210.0	185.0	35.0
TPS2051BDGNR	HVSSOP	DGN	8	2500	364.0	364.0	27.0
TPS2051BDGNR	HVSSOP	DGN	8	2500	346.0	346.0	35.0
TPS2051BDR	SOIC	D	8	2500	340.5	338.1	20.6
TPS2052BDGNR	HVSSOP	DGN	8	2500	346.0	346.0	35.0

Device	Package Type	Package Drawing	Pins	SPQ	Length (mm)	Width (mm)	Height (mm)
TPS2052BDR	SOIC	D	8	2500	340.5	338.1	20.6
TPS2052BDRBR	SON	DRB	8	3000	346.0	346.0	35.0
TPS2052BDRBT	SON	DRB	8	250	200.0	183.0	25.0
TPS2053BDR	SOIC	D	16	2500	340.5	336.1	32.0
TPS2054BDR	SOIC	D	16	2500	340.5	336.1	32.0

TUBE

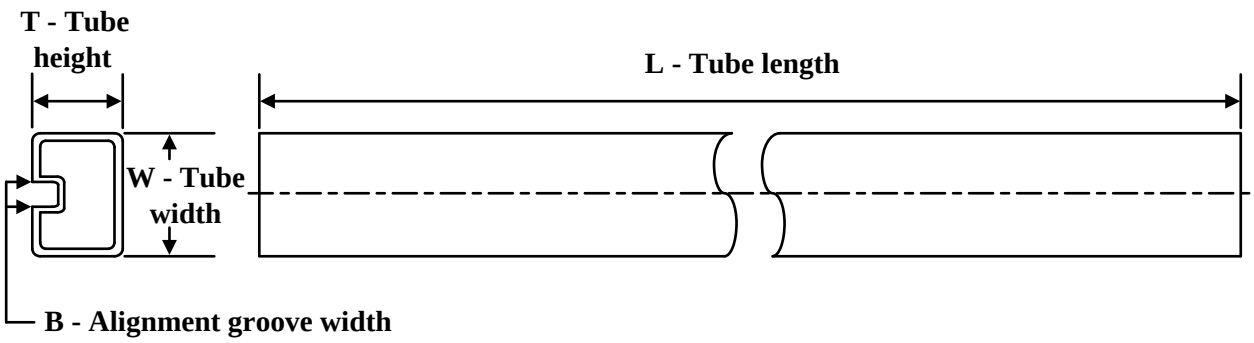

*All dimensions are nominal

Device	Package Name	Package Type	Pins	SPQ	L (mm)	W (mm)	T (µm)	B (mm)
TPS2041BD	D	SOIC	8	75	507	8	3940	4.32
TPS2041BDG4	D	SOIC	8	75	507	8	3940	4.32
TPS2041BDGN	DGN	HVSSOP	8	80	322	6.55	1000	3.01
TPS2041BDGN	DGN	HVSSOP	8	80	330	6.55	500	2.88
TPS2041BDGNG4	DGN	HVSSOP	8	80	330	6.55	500	2.88
TPS2041BDGNG4	DGN	HVSSOP	8	80	322	6.55	1000	3.01
TPS2042BD	D	SOIC	8	75	507	8	3940	4.32
TPS2042BDGN	DGN	HVSSOP	8	80	322	6.55	1000	3.01
TPS2042BDGNG4	DGN	HVSSOP	8	80	322	6.55	1000	3.01
TPS2043BD	D	SOIC	16	40	507	8	3940	4.32
TPS2044BD	D	SOIC	16	40	507	8	3940	4.32
TPS2044BDG4	D	SOIC	16	40	507	8	3940	4.32
TPS2051BD	D	SOIC	8	75	507	8	3940	4.32
TPS2051BDG4	D	SOIC	8	75	507	8	3940	4.32
TPS2051BDGN	DGN	HVSSOP	8	80	322	6.55	1000	3.01
TPS2051BDGN	DGN	HVSSOP	8	80	330	6.55	500	2.88
TPS2051BDGNG4	DGN	HVSSOP	8	80	322	6.55	1000	3.01
TPS2051BDGNG4	DGN	HVSSOP	8	80	330	6.55	500	2.88
TPS2052BDGN	DGN	HVSSOP	8	80	330	6.55	500	2.88
TPS2052BDGN	DGN	HVSSOP	8	80	322	6.55	1000	3.01
TPS2052BDGNG4	DGN	HVSSOP	8	80	322	6.55	1000	3.01
TPS2052BDGNG4	DGN	HVSSOP	8	80	330	6.55	500	2.88
TPS2053BD	D	SOIC	16	40	507	8	3940	4.32
TPS2054BD	D	SOIC	16	40	507	8	3940	4.32

GENERIC PACKAGE VIEW

DRB 8 VSON - 1 mm max height

PLASTIC SMALL OUTLINE - NO LEAD

Images above are just a representation of the package family, actual package may vary.
Refer to the product data sheet for package details.

4203482/L

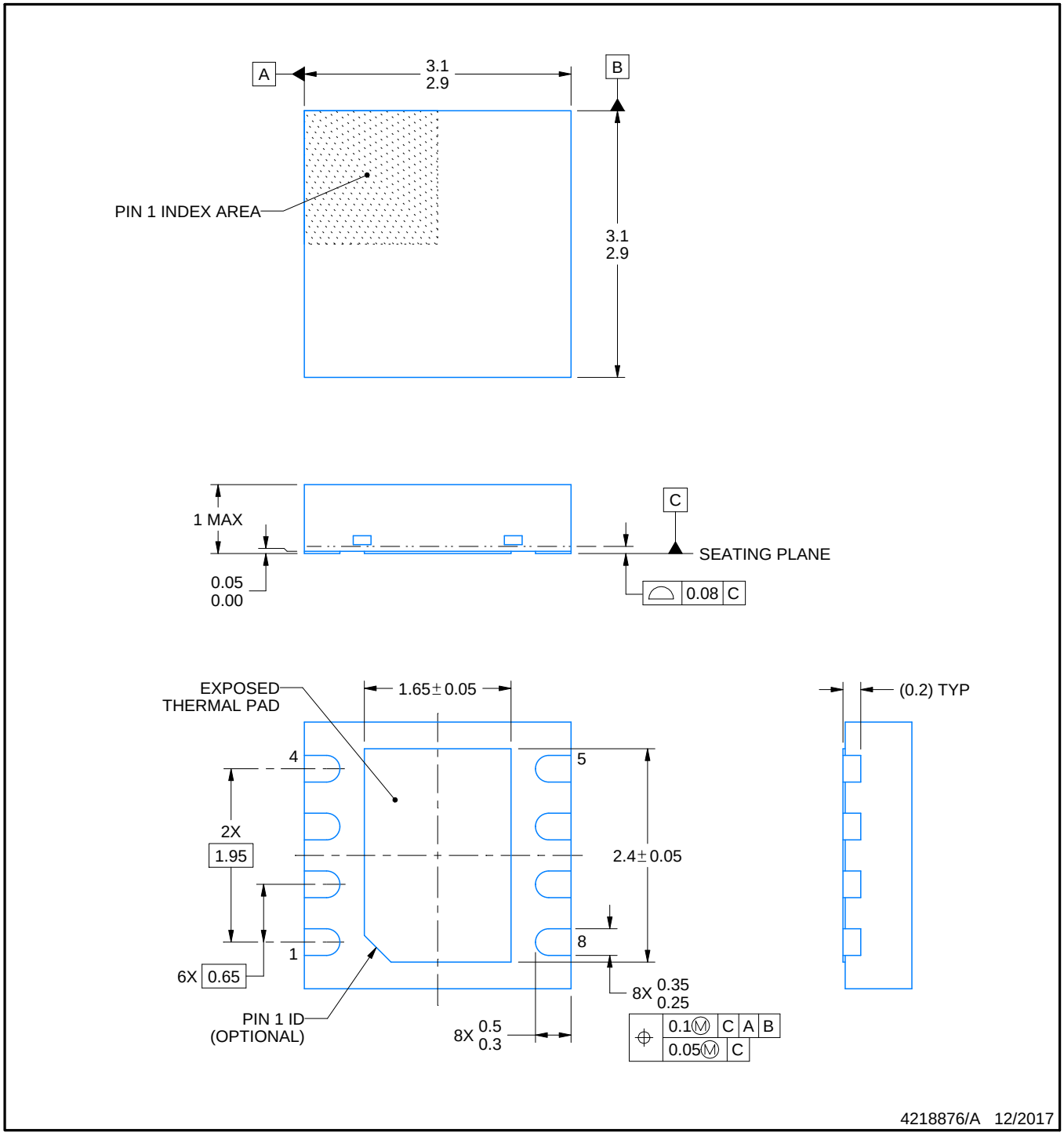

NOTES:

1. All linear dimensions are in millimeters. Any dimensions in parenthesis are for reference only. Dimensioning and tolerancing per ASME Y14.5M.
2. This drawing is subject to change without notice.
3. The package thermal pad must be soldered to the printed circuit board for thermal and mechanical performance.

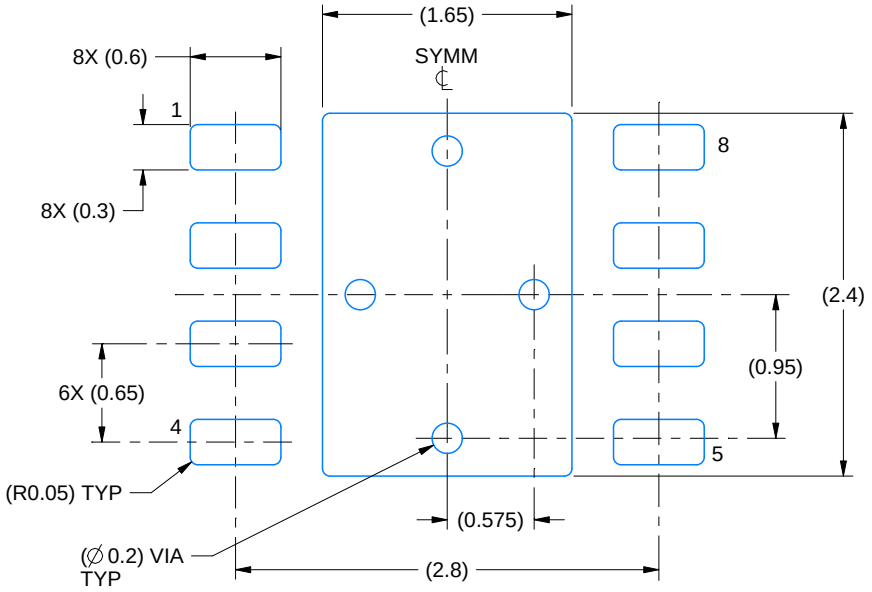

LAND PATTERN EXAMPLE
SCALE:20X

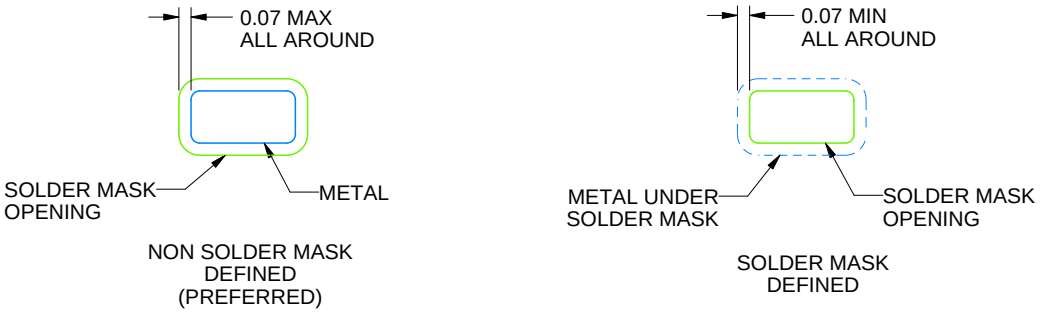

SOLDER MASK DETAILS

4218876/A 12/2017

NOTES: (continued)

4. This package is designed to be soldered to a thermal pad on the board. For more information, see Texas Instruments literature number SLUA271 (www.ti.com/lit/slua271).
5. Vias are optional depending on application, refer to device data sheet. If any vias are implemented, refer to their locations shown on this view. It is recommended that vias under paste be filled, plugged or tented.

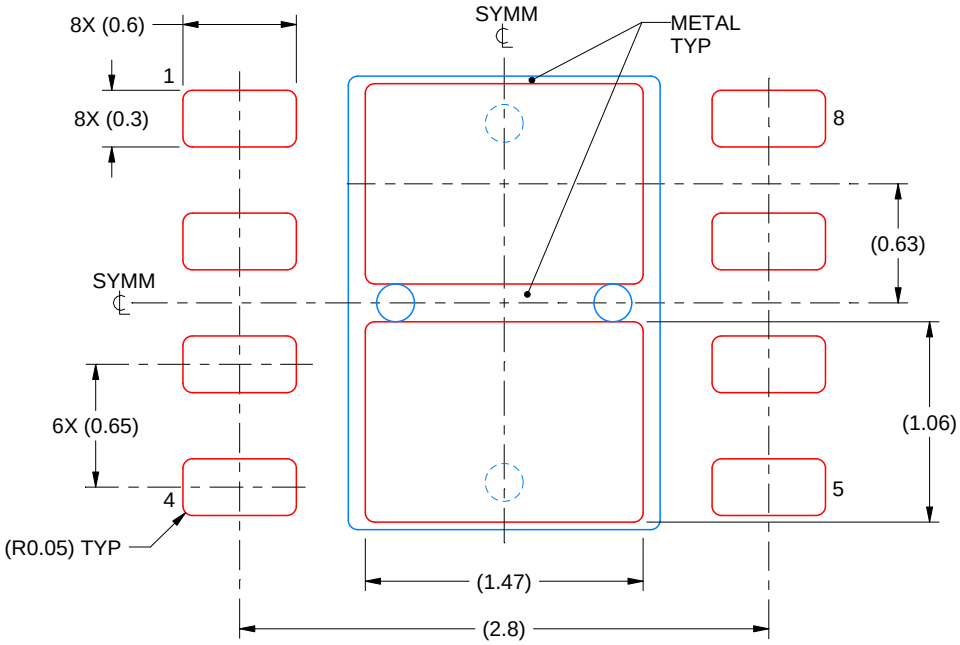

SOLDER PASTE EXAMPLE
BASED ON 0.125 mm THICK STENCIL

EXPOSED PAD
81% PRINTED SOLDER COVERAGE BY AREA
SCALE:25X

4218876/A 12/2017

NOTES: (continued)

6. Laser cutting apertures with trapezoidal walls and rounded corners may offer better paste release. IPC-7525 may have alternate design recommendations.

D (R–PDSO–G16) PLASTIC SMALL OUTLINE

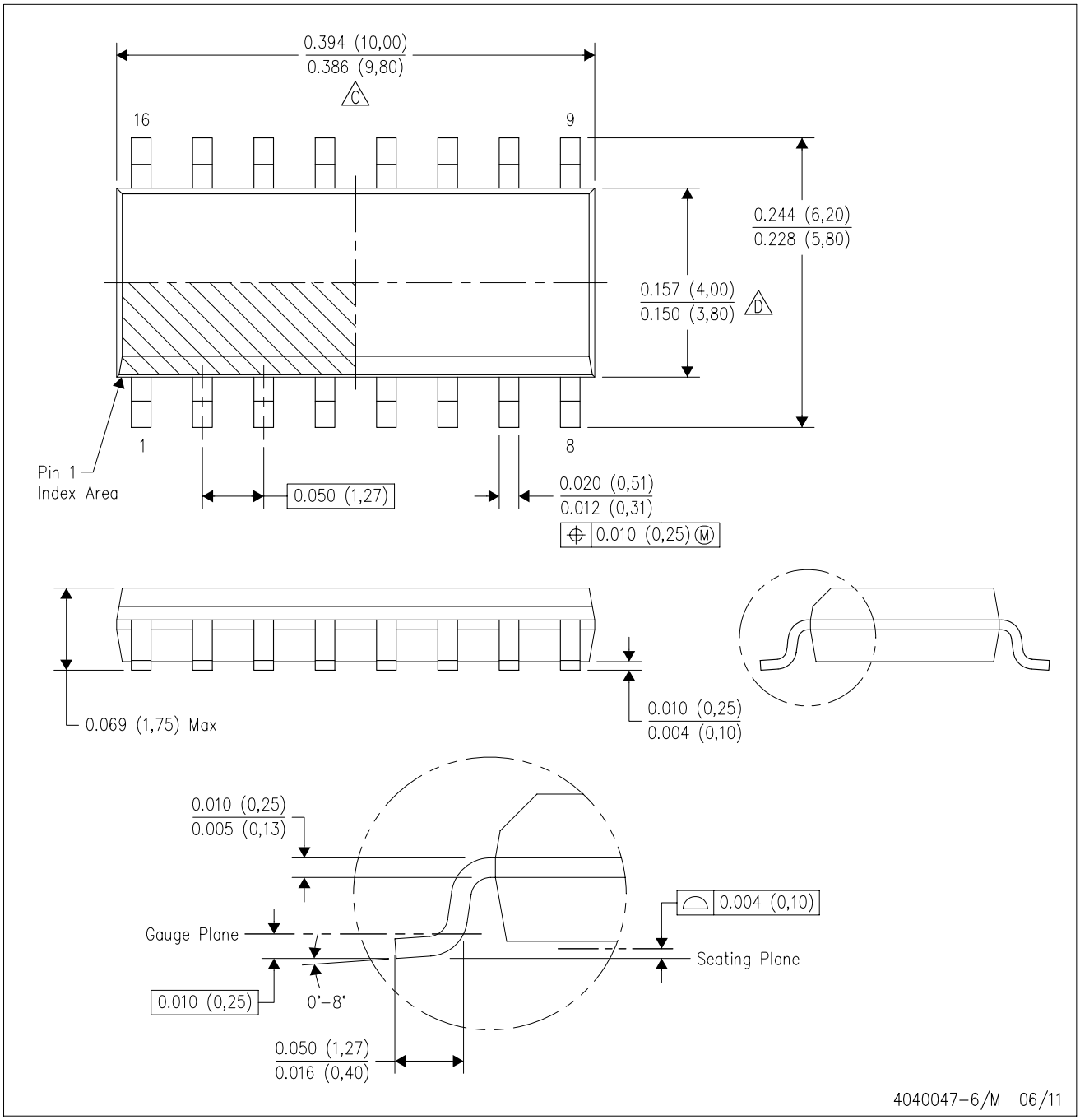

NOTES:
A. All linear dimensions are in inches (millimeters).
B. This drawing is subject to change without notice.
C. Body length does not include mold flash, protrusions, or gate burrs. Mold flash, protrusions, or gate burrs shall not exceed 0.006 (0,15) each side.
D. Body width does not include interlead flash. Interlead flash shall not exceed 0.017 (0,43) each side.
E. Reference JEDEC MS–012 variation AC.

D (R–PDSO–G16) PLASTIC SMALL OUTLINE

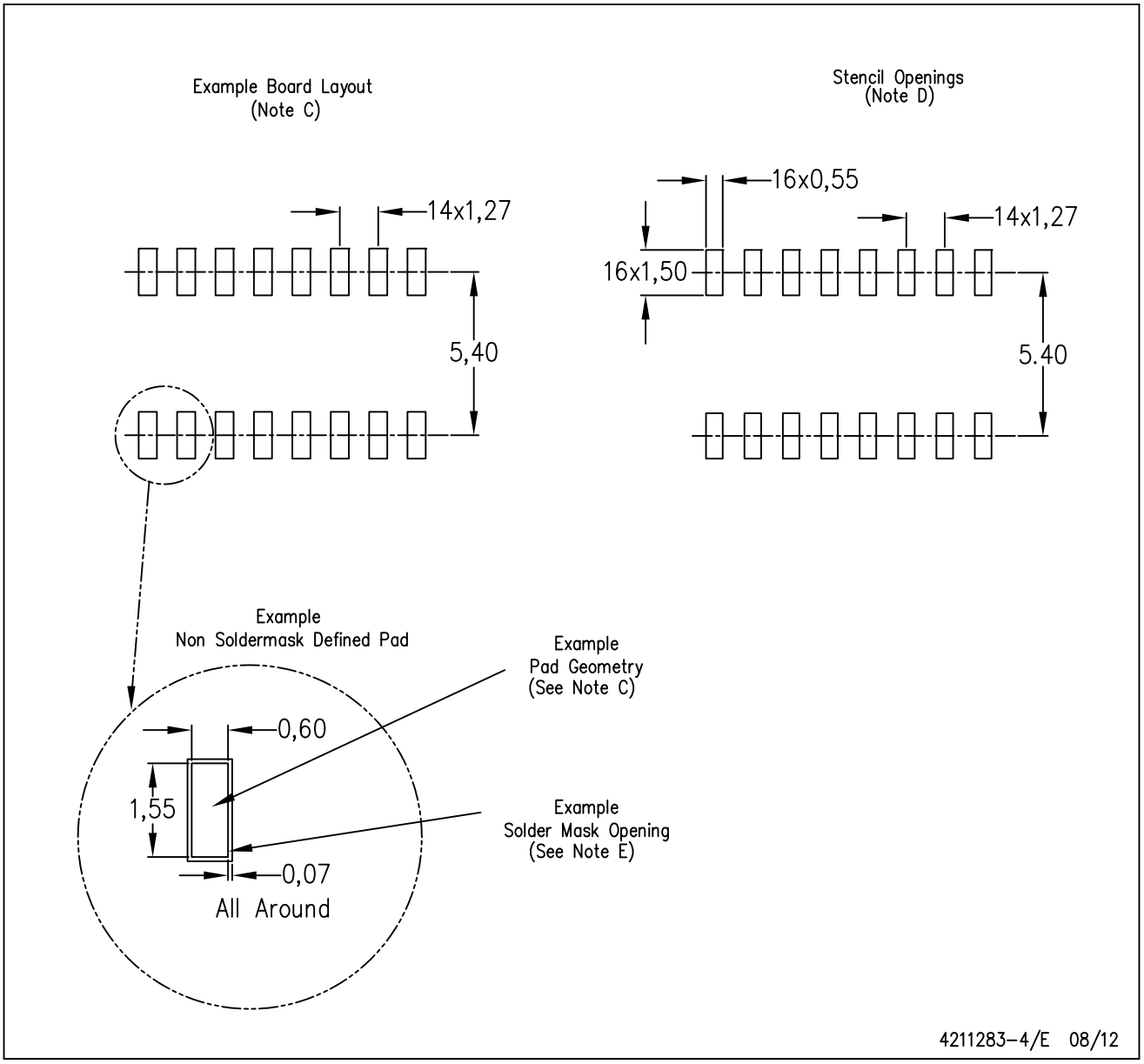

NOTES:
A. All linear dimensions are in millimeters.
B. This drawing is subject to change without notice.
C. Publication IPC–7351 is recommended for alternate designs.
D. Laser cutting apertures with trapezoidal walls and also rounding corners will offer better paste release. Customers should contact their board assembly site for stencil design recommendations. Refer to IPC–7525 for other stencil recommendations.
E. Customers should contact their board fabrication site for solder mask tolerances between and around signal pads.

GENERIC PACKAGE VIEW

DGN 8

PowerPAD VSSOP - 1.1 mm max height

3 x 3, 0.65 mm pitch

SMALL OUTLINE PACKAGE

This image is a representation of the package family, actual package may vary.
Refer to the product data sheet for package details.

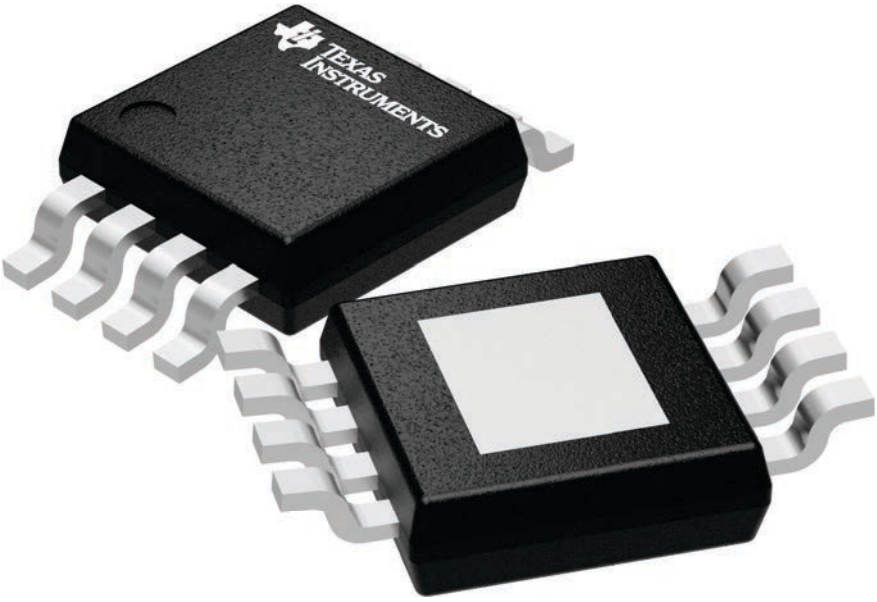

4225482/A

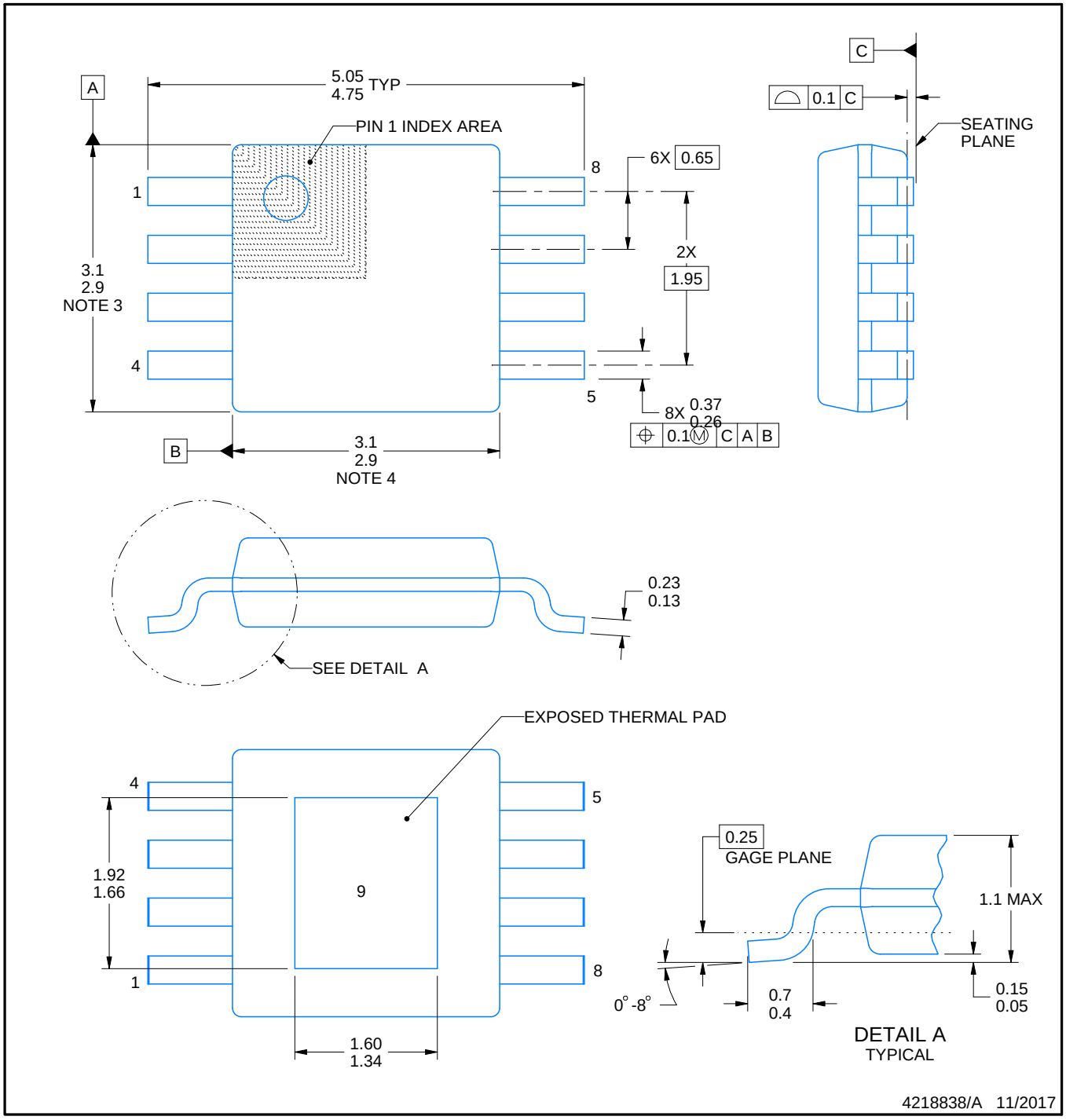

NOTES:

1. All linear dimensions are in millimeters. Any dimensions in parenthesis are for reference only. Dimensioning and tolerancing per ASME Y14.5M.
2. This drawing is subject to change without notice.
3. This dimension does not include mold flash, protrusions, or gate burrs. Mold flash, protrusions, or gate burrs shall not exceed 0.15 mm per side.
4. This dimension does not include interlead flash. Interlead flash shall not exceed 0.25 mm per side.
5. Reference JEDEC registration MO-187.

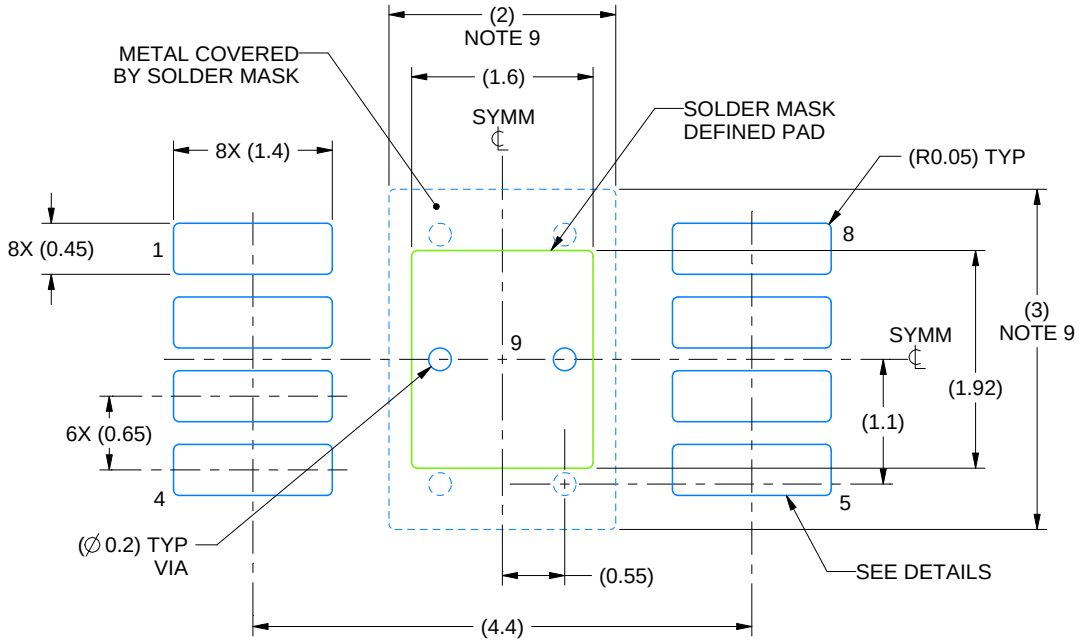

LAND PATTERN EXAMPLE
EXPOSED METAL SHOWN
SCALE: 15X

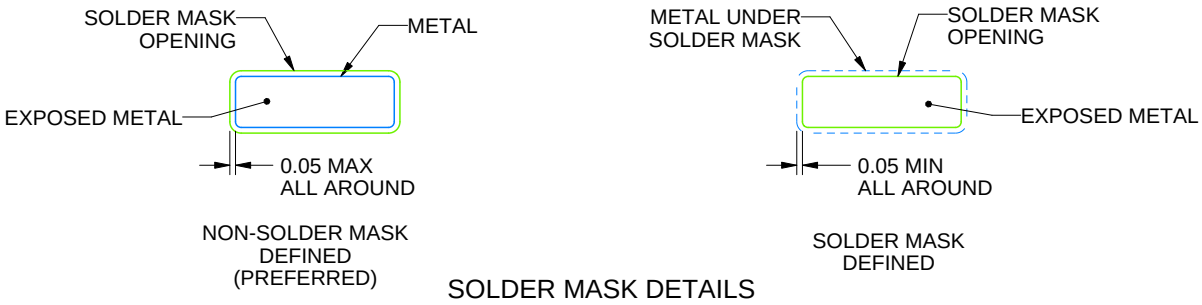

SOLDER MASK DETAILS

4218838/A 11/2017

NOTES: (continued)

6. Publication IPC-7351 may have alternate designs.
7. Solder mask tolerances between and around signal pads can vary based on board fabrication site.
8. Vias are optional depending on application, refer to device data sheet. If any vias are implemented, refer to their locations shown on this view. It is recommended that vias under paste be filled, plugged or tented.
9. Size of metal pad may vary due to creepage requirement.

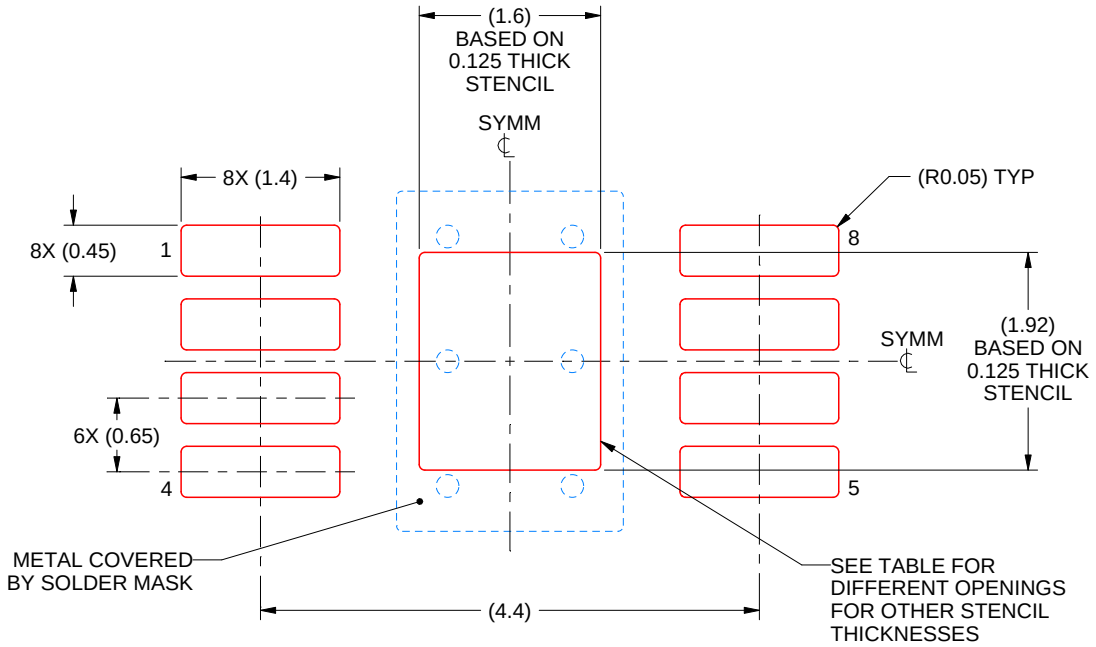

SOLDER PASTE EXAMPLE
EXPOSED PAD 9:
100% PRINTED SOLDER COVERAGE BY AREA
SCALE: 15X

STENCIL THICKNESS	SOLDER STENCIL OPENING
0.1	1.79 X 2.15
0.125	1.60 X 1.92 (SHOWN)
0.15	1.46 X 1.75
0.175	1.35 X 1.62

4218838/A 11/2017

NOTES: (continued)

10. Laser cutting apertures with trapezoidal walls and rounded corners may offer better paste release. IPC-7525 may have alternate design recommendations.
11. Board assembly site may have different recommendations for stencil design.

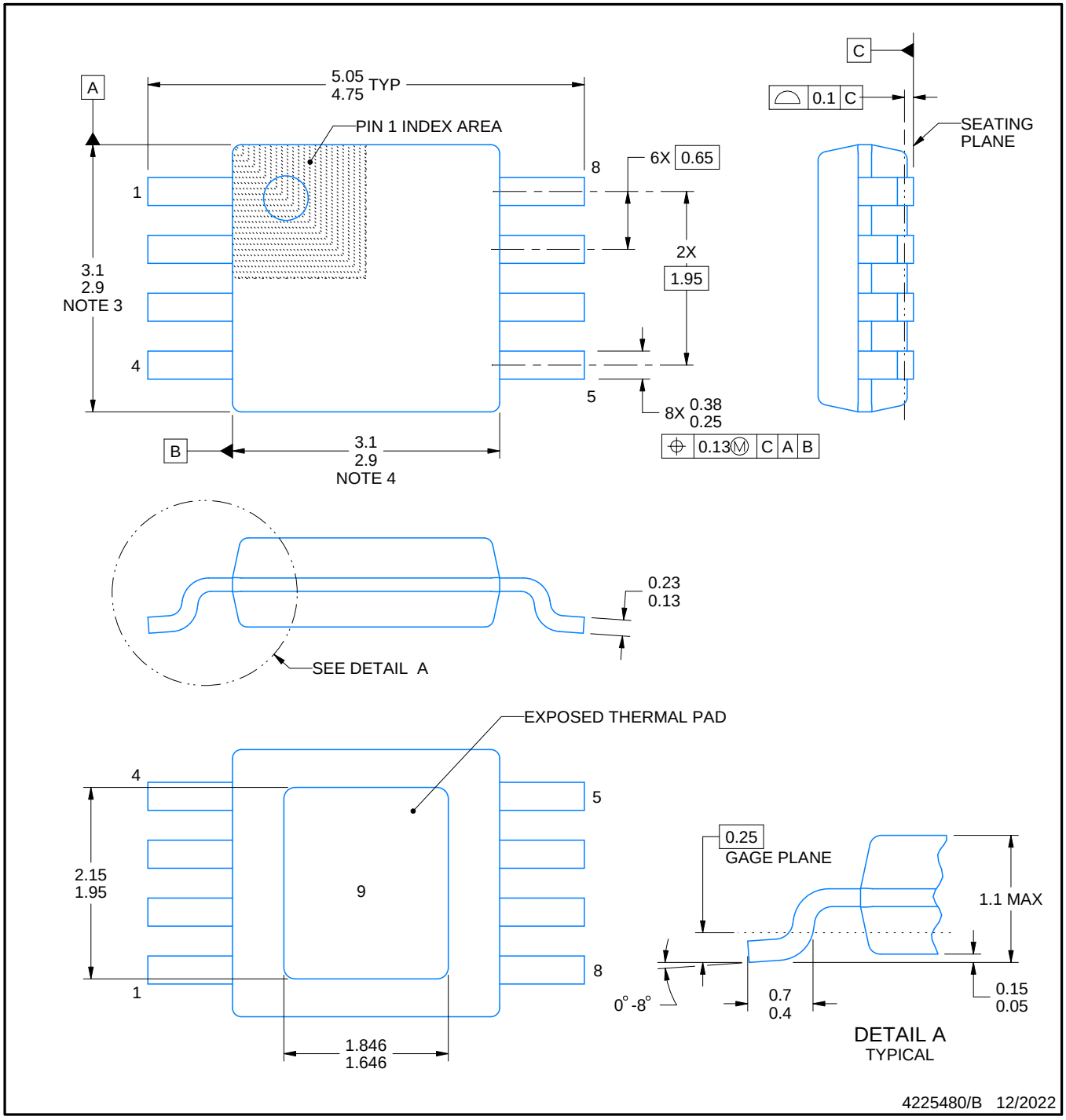

PowerPAD is a trademark of Texas Instruments.

NOTES:

1. All linear dimensions are in millimeters. Any dimensions in parenthesis are for reference only. Dimensioning and tolerancing per ASME Y14.5M.
2. This drawing is subject to change without notice.
3. This dimension does not include mold flash, protrusions, or gate burrs. Mold flash, protrusions, or gate burrs shall not exceed 0.15 mm per side.
4. This dimension does not include interlead flash. Interlead flash shall not exceed 0.25 mm per side.
5. Reference JEDEC registration MO-187.

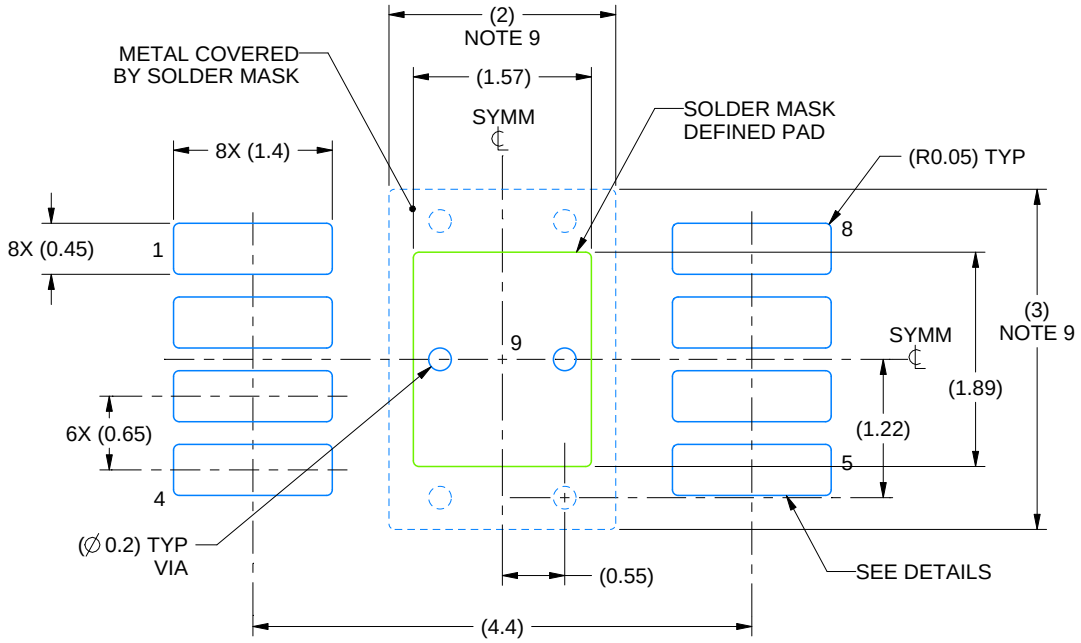

LAND PATTERN EXAMPLE
EXPOSED METAL SHOWN
SCALE: 15X

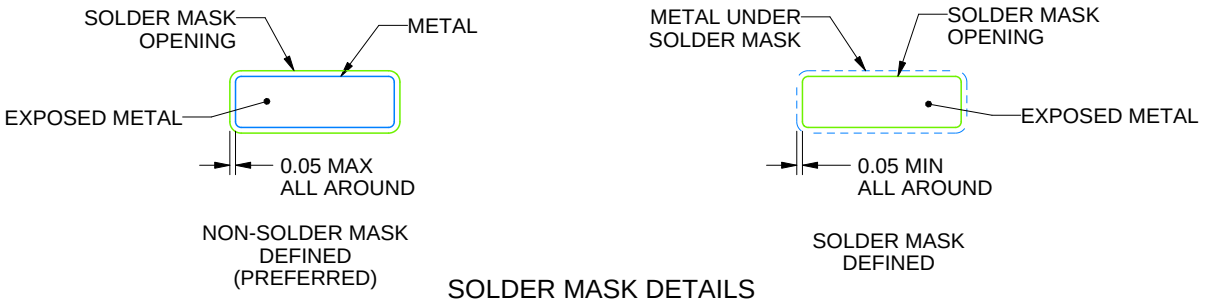

SOLDER MASK DETAILS

4225480/B 12/2022

NOTES: (continued)

6. Publication IPC-7351 may have alternate designs.
7. Solder mask tolerances between and around signal pads can vary based on board fabrication site.
8. Vias are optional depending on application, refer to device data sheet. If any vias are implemented, refer to their locations shown on this view. It is recommended that vias under paste be filled, plugged or tented.
9. Size of metal pad may vary due to creepage requirement.

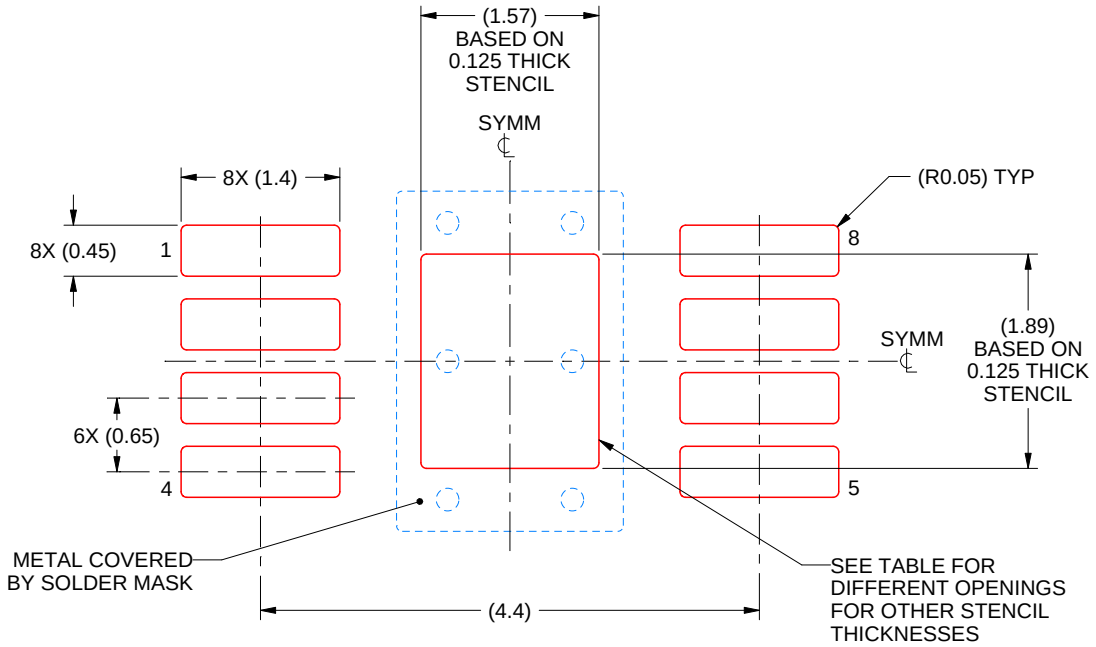

SOLDER PASTE EXAMPLE
EXPOSED PAD 9:
100% PRINTED SOLDER COVERAGE BY AREA
SCALE: 15X

STENCIL THICKNESS	SOLDER STENCIL OPENING
0.1	1.76 X 2.11
0.125	1.57 X 1.89 (SHOWN)
0.15	1.43 X 1.73
0.175	1.33 X 1.60

4225480/B 12/2022

NOTES: (continued)

10. Laser cutting apertures with trapezoidal walls and rounded corners may offer better paste release. IPC-7525 may have alternate design recommendations.
11. Board assembly site may have different recommendations for stencil design.

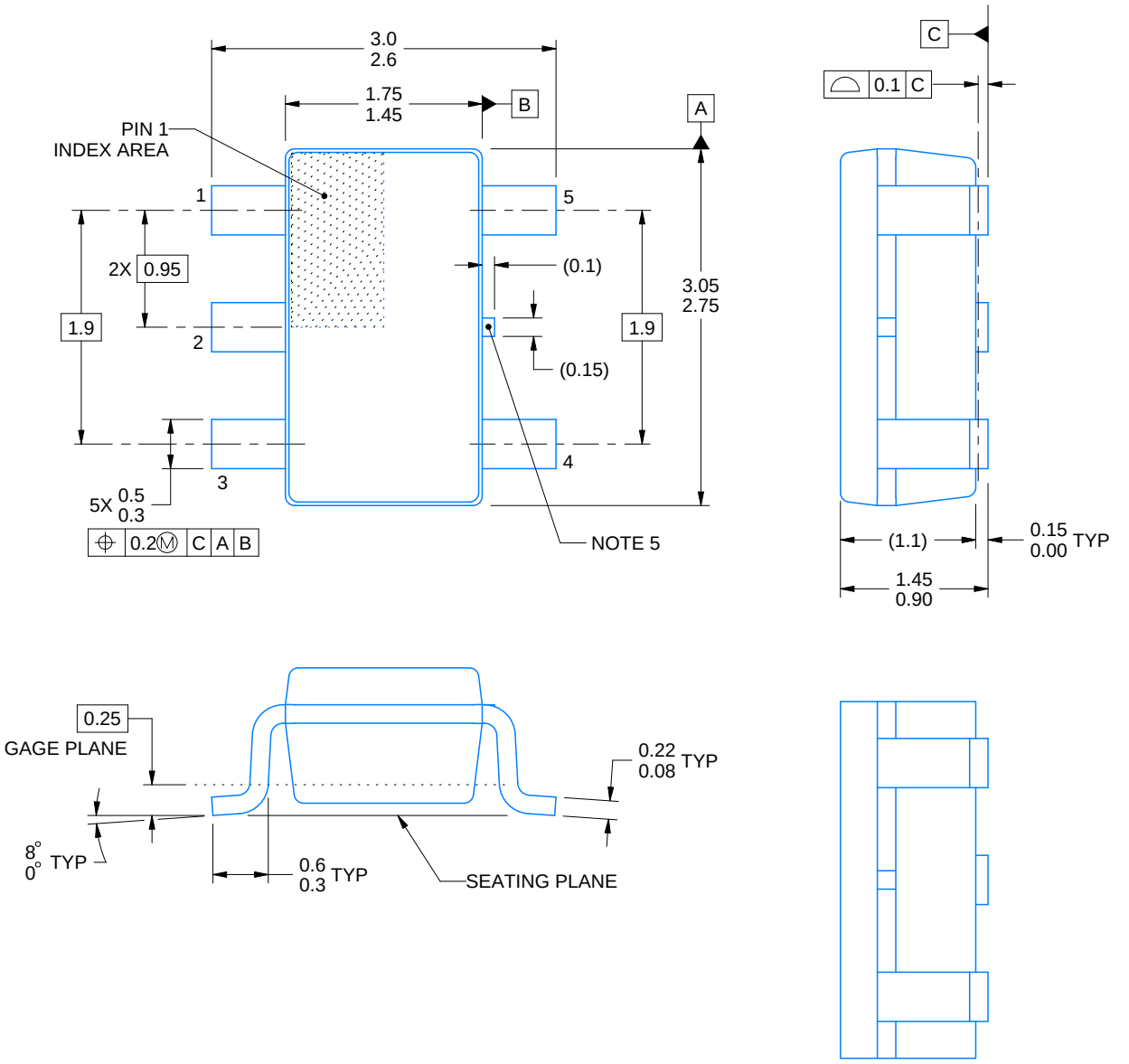

ALTERNATIVE PACKAGE SINGULATION VIEW

4214839/J 02/2024

NOTES:

1. All linear dimensions are in millimeters. Any dimensions in parenthesis are for reference only. Dimensioning and tolerancing per ASME Y14.5M.
2. This drawing is subject to change without notice.
3. Refernce JEDEC MO-178.
4. Body dimensions do not include mold flash, protrusions, or gate burrs. Mold flash, protrusions, or gate burrs shall not exceed 0.25 mm per side.
5. Support pin may differ or may not be present.

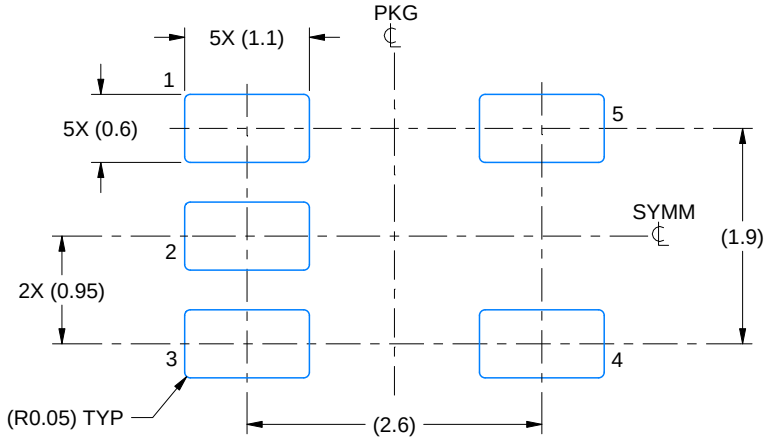

LAND PATTERN EXAMPLE
EXPOSED METAL SHOWN
SCALE:15X

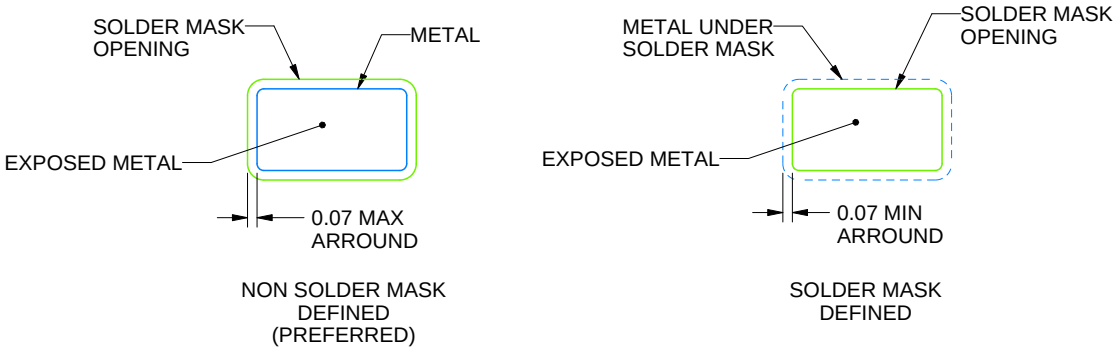

SOLDER MASK DETAILS

4214839/J 02/2024

NOTES: (continued)

6. Publication IPC-7351 may have alternate designs.
7. Solder mask tolerances between and around signal pads can vary based on board fabrication site.

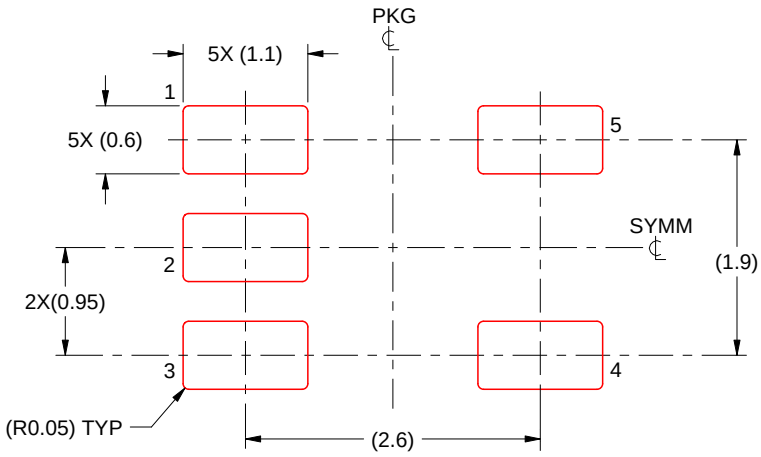

SOLDER PASTE EXAMPLE
BASED ON 0.125 mm THICK STENCIL
SCALE:15X

4214839/J 02/2024

NOTES: (continued)

8. Laser cutting apertures with trapezoidal walls and rounded corners may offer better paste release. IPC-7525 may have alternate design recommendations.
9. Board assembly site may have different recommendations for stencil design.

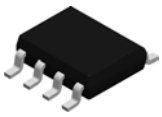

PACKAGE OUTLINE

D0008A

SOIC - 1.75 mm max height

SMALL OUTLINE INTEGRATED CIRCUIT

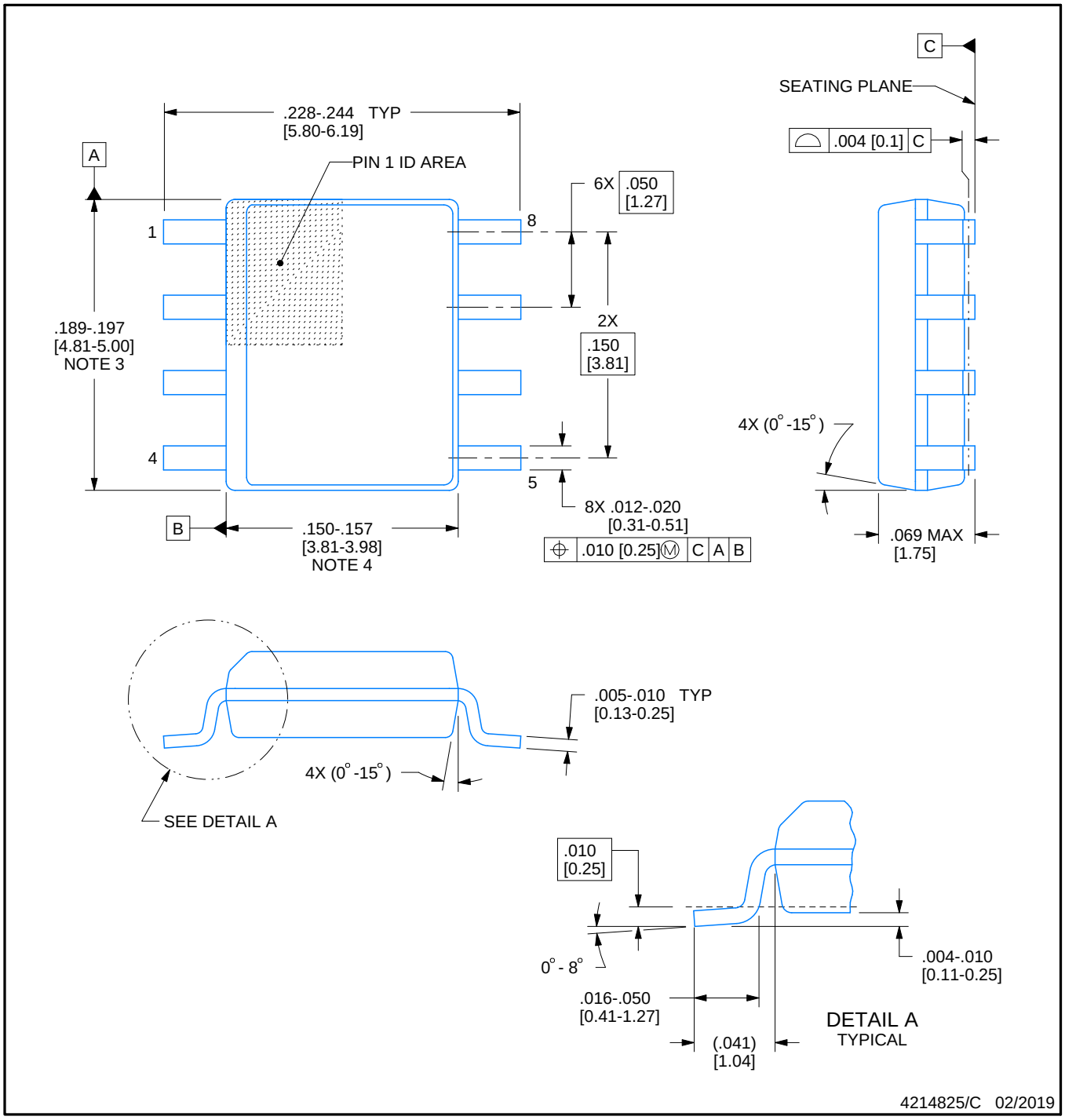

NOTES:

1. Linear dimensions are in inches [millimeters]. Dimensions in parenthesis are for reference only. Controlling dimensions are in inches. Dimensioning and tolerancing per ASME Y14.5M.
2. This drawing is subject to change without notice.
3. This dimension does not include mold flash, protrusions, or gate burrs. Mold flash, protrusions, or gate burrs shall not exceed .006 [0.15] per side.
4. This dimension does not include interlead flash.
5. Reference JEDEC registration MS-012, variation AA.

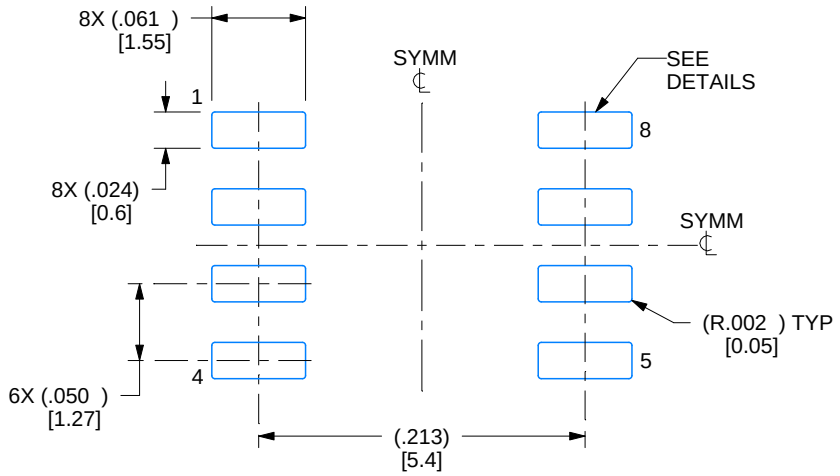

LAND PATTERN EXAMPLE
EXPOSED METAL SHOWN
SCALE:8X

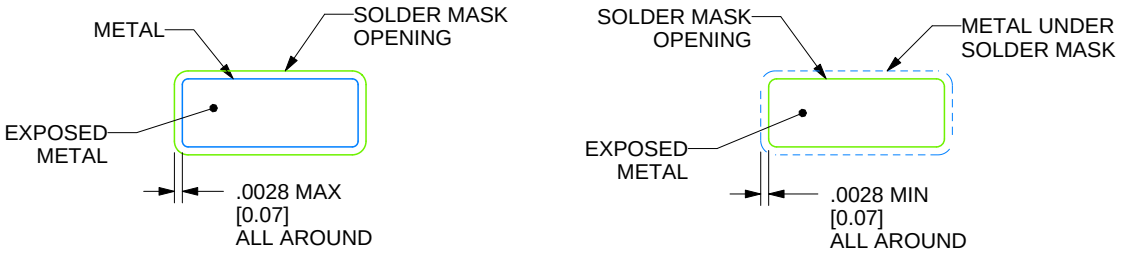

SOLDER MASK DETAILS

4214825/C 02/2019

NOTES: (continued)

6. Publication IPC-7351 may have alternate designs.
7. Solder mask tolerances between and around signal pads can vary based on board fabrication site.

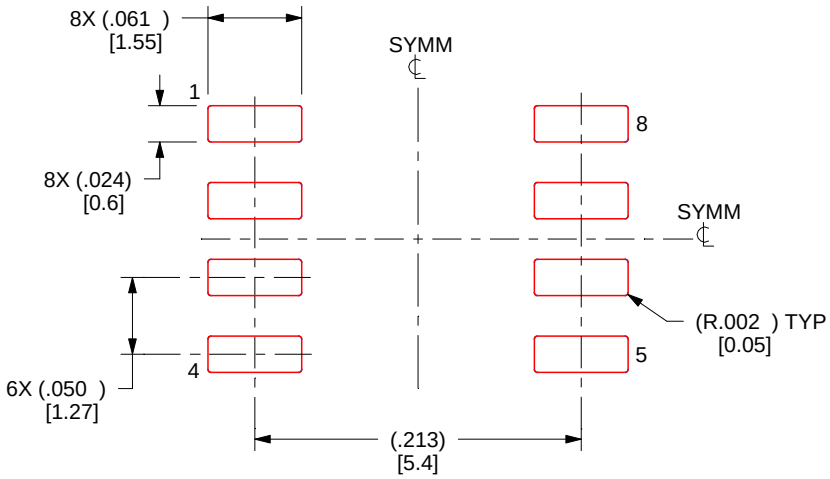

SOLDER PASTE EXAMPLE
BASED ON .005 INCH [0.125 MM] THICK STENCIL
SCALE:8X

4214825/C 02/2019

NOTES: (continued)

8. Laser cutting apertures with trapezoidal walls and rounded corners may offer better paste release. IPC-7525 may have alternate design recommendations.
9. Board assembly site may have different recommendations for stencil design.

PACKAGING INFORMATION

Orderable Device	Status (1)	Package Type	Package Drawing	Pins	Package Qty	Eco Plan (2)	Lead finish/ Ball material (6)	MSL Peak Temp (3)	Op Temp (°C)	Device Marking (4/5)	Samples
TPS2041BD	ACTIVE	SOIC	D	8	75	RoHS & Green	NIPDAU	Level-1-260C-UNLIM	-40 to 125	2041B	Samples
TPS2041BDBVR	ACTIVE	SOT-23	DBV	5	3000	RoHS & Green	NIPDAU	Level-1-260C-UNLIM	-40 to 125	PLII	Samples
TPS2041BDBVRG4	ACTIVE	SOT-23	DBV	5	3000	RoHS & Green	NIPDAU	Level-1-260C-UNLIM	-40 to 125	PLII	Samples
TPS2041BDBVT	ACTIVE	SOT-23	DBV	5	250	RoHS & Green	NIPDAU	Level-1-260C-UNLIM	-40 to 125	PLII	Samples
TPS2041BDBVTG4	ACTIVE	SOT-23	DBV	5	250	RoHS & Green	NIPDAU	Level-1-260C-UNLIM	-40 to 125	PLII	Samples
TPS2041BDG4	ACTIVE	SOIC	D	8	75	RoHS & Green	NIPDAU	Level-1-260C-UNLIM	-40 to 125	2041B	Samples
TPS2041BDGN	ACTIVE	HVSSOP	DGN	8	80	RoHS & Green	NIPDAU | NIPDAUAG	Level-1-260C-UNLIM	-40 to 125	2041B	Samples
TPS2041BDGNG4	ACTIVE	HVSSOP	DGN	8	80	RoHS & Green	NIPDAU	Level-1-260C-UNLIM	-40 to 125	2041B	Samples
TPS2041BDGNR	ACTIVE	HVSSOP	DGN	8	2500	RoHS & Green	NIPDAU | NIPDAUAG	Level-1-260C-UNLIM	-40 to 125	2041B	Samples
TPS2041BDR	ACTIVE	SOIC	D	8	2500	RoHS & Green	NIPDAU	Level-1-260C-UNLIM	-40 to 125	2041B	Samples
TPS2041BDRG4	ACTIVE	SOIC	D	8	2500	RoHS & Green	NIPDAU	Level-1-260C-UNLIM	-40 to 125	2041B	Samples
TPS2042BD	ACTIVE	SOIC	D	8	75	RoHS & Green	NIPDAU	Level-1-260C-UNLIM	-40 to 125	2042B	Samples
TPS2042BDGN	ACTIVE	HVSSOP	DGN	8	80	RoHS & Green	NIPDAU	Level-1-260C-UNLIM	-40 to 125	2042B	Samples
TPS2042BDGNG4	ACTIVE	HVSSOP	DGN	8	80	RoHS & Green	NIPDAU	Level-1-260C-UNLIM	-40 to 125	2042B	Samples
TPS2042BDGNR	ACTIVE	HVSSOP	DGN	8	2500	RoHS & Green	NIPDAU	Level-1-260C-UNLIM	-40 to 125	2042B	Samples
TPS2042BDGNRG4	ACTIVE	HVSSOP	DGN	8	2500	RoHS & Green	NIPDAU	Level-1-260C-UNLIM	-40 to 125	2042B	Samples
TPS2042BDR	ACTIVE	SOIC	D	8	2500	RoHS & Green	NIPDAU	Level-1-260C-UNLIM	-40 to 125	2042B	Samples
TPS2042BDRBR	ACTIVE	SON	DRB	8	3000	RoHS & Green	NIPDAU	Level-1-260C-UNLIM	-40 to 125	2042	Samples
TPS2042BDRBT	ACTIVE	SON	DRB	8	250	RoHS & Green	NIPDAU	Level-1-260C-UNLIM	-40 to 125	2042	Samples
TPS2042BDRG4	ACTIVE	SOIC	D	8	2500	RoHS & Green	NIPDAU	Level-1-260C-UNLIM	-40 to 125	2042B	Samples

Orderable Device	Status (1)	Package Type	Package Drawing	Pins	Package Qty	Eco Plan (2)	Lead finish/ Ball material (6)	MSL Peak Temp (3)	Op Temp (°C)	Device Marking (4/5)	Samples
TPS2043BD	ACTIVE	SOIC	D	16	40	RoHS & Green	NIPDAU	Level-1-260C-UNLIM	-40 to 125	2043B	Samples
TPS2043BDR	ACTIVE	SOIC	D	16	2500	RoHS & Green	NIPDAU	Level-1-260C-UNLIM	-40 to 125	2043B	Samples
TPS2043BDRG4	ACTIVE	SOIC	D	16	2500	RoHS & Green	NIPDAU	Level-1-260C-UNLIM	-40 to 125	2043B	Samples
TPS2044BD	ACTIVE	SOIC	D	16	40	RoHS & Green	NIPDAU	Level-1-260C-UNLIM	-40 to 125	2044B	Samples
TPS2044BDG4	ACTIVE	SOIC	D	16	40	RoHS & Green	NIPDAU	Level-1-260C-UNLIM	-40 to 125	2044B	Samples
TPS2044BDR	ACTIVE	SOIC	D	16	2500	RoHS & Green	NIPDAU	Level-1-260C-UNLIM	-40 to 125	2044B	Samples
TPS2044BDRG4	ACTIVE	SOIC	D	16	2500	RoHS & Green	NIPDAU	Level-1-260C-UNLIM	-40 to 125	2044B	Samples
TPS2051BD	ACTIVE	SOIC	D	8	75	RoHS & Green	NIPDAU	Level-1-260C-UNLIM	-40 to 125	2051B	Samples
TPS2051BDBVR	ACTIVE	SOT-23	DBV	5	3000	RoHS & Green	NIPDAU | SN	Level-1-260C-UNLIM	-40 to 125	PLJI	Samples
TPS2051BDBVT	OBSOLETE	SOT-23	DBV	5		TBD	Call TI	Call TI	-40 to 125	PLJI	
TPS2051BDG4	ACTIVE	SOIC	D	8	75	RoHS & Green	NIPDAU	Level-1-260C-UNLIM	-40 to 125	2051B	Samples
TPS2051BDGN	ACTIVE	HVSSOP	DGN	8	80	RoHS & Green	NIPDAU | NIPDAUAG	Level-1-260C-UNLIM	-40 to 125	2051B	Samples
TPS2051BDGNG4	ACTIVE	HVSSOP	DGN	8	80	RoHS & Green	NIPDAU	Level-1-260C-UNLIM	-40 to 125	2051B	Samples
TPS2051BDGNR	ACTIVE	HVSSOP	DGN	8	2500	RoHS & Green	NIPDAU | NIPDAUAG	Level-1-260C-UNLIM	-40 to 125	2051B	Samples
TPS2051BDGNRG4	ACTIVE	HVSSOP	DGN	8	2500	RoHS & Green	NIPDAU	Level-1-260C-UNLIM	-40 to 125	2051B	Samples
TPS2051BDR	ACTIVE	SOIC	D	8	2500	RoHS & Green	NIPDAU	Level-1-260C-UNLIM	-40 to 125	2051B	Samples
TPS2051BDRG4	ACTIVE	SOIC	D	8	2500	RoHS & Green	NIPDAU	Level-1-260C-UNLIM	-40 to 125	2051B	Samples
TPS2052BD	OBSOLETE	SOIC	D	8		TBD	Call TI	Call TI	-40 to 125	2052B	
TPS2052BDGN	ACTIVE	HVSSOP	DGN	8	80	RoHS & Green	NIPDAU | NIPDAUAG	Level-1-260C-UNLIM	-40 to 125	2052B	Samples
TPS2052BDGNG4	ACTIVE	HVSSOP	DGN	8	80	RoHS & Green	NIPDAU	Level-1-260C-UNLIM	-40 to 125	2052B	Samples
TPS2052BDGNR	ACTIVE	HVSSOP	DGN	8	2500	RoHS & Green	NIPDAU	Level-1-260C-UNLIM	-40 to 125	2052B	Samples
TPS2052BDGNRG4	ACTIVE	HVSSOP	DGN	8	2500	RoHS & Green	NIPDAU	Level-1-260C-UNLIM	-40 to 125	2052B	Samples

Orderable Device	Status (1)	Package Type	Package Drawing	Pins	Package Qty	Eco Plan (2)	Lead finish/ Ball material (6)	MSL Peak Temp (3)	Op Temp (°C)	Device Marking (4/5)	Samples
TPS2052BDR	ACTIVE	SOIC	D	8	2500	RoHS & Green	NIPDAU	Level-1-260C-UNLIM	-40 to 125	2052B	Samples
TPS2052BDRBR	ACTIVE	SON	DRB	8	3000	RoHS & Green	NIPDAU	Level-1-260C-UNLIM	-40 to 125	2052	Samples
TPS2052BDRBT	ACTIVE	SON	DRB	8	250	RoHS & Green	NIPDAU	Level-1-260C-UNLIM	-40 to 85	2052	Samples
TPS2053BD	ACTIVE	SOIC	D	16	40	RoHS & Green	NIPDAU	Level-1-260C-UNLIM	-40 to 125	2053B	Samples
TPS2053BDR	ACTIVE	SOIC	D	16	2500	RoHS & Green	NIPDAU	Level-1-260C-UNLIM	-40 to 125	2053B	Samples
TPS2054BD	ACTIVE	SOIC	D	16	40	RoHS & Green	NIPDAU	Level-1-260C-UNLIM	-40 to 125	2054B	Samples
TPS2054BDR	ACTIVE	SOIC	D	16	2500	RoHS & Green	NIPDAU	Level-1-260C-UNLIM	-40 to 125	2054B	Samples

(1) The marketing status values are defined as follows:
ACTIVE: Product device recommended for new designs.
LIFEBUY: TI has announced that the device will be discontinued, and a lifetime-buy period is in effect.
NRND: Not recommended for new designs. Device is in production to support existing customers, but TI does not recommend using this part in a new design.
PREVIEW: Device has been announced but is not in production. Samples may or may not be available.
OBSOLETE: TI has discontinued the production of the device.

(2) **RoHS:** TI defines "RoHS" to mean semiconductor products that are compliant with the current EU RoHS requirements for all 10 RoHS substances, including the requirement that RoHS substance do not exceed 0.1% by weight in homogeneous materials. Where designed to be soldered at high temperatures, "RoHS" products are suitable for use in specified lead-free processes. TI may reference these types of products as "Pb-Free".
RoHS Exempt: TI defines "RoHS Exempt" to mean products that contain lead but are compliant with EU RoHS pursuant to a specific EU RoHS exemption.
Green: TI defines "Green" to mean the content of Chlorine (Cl) and Bromine (Br) based flame retardants meet JS709B low halogen requirements of <=1000ppm threshold. Antimony trioxide based flame retardants must also meet the <=1000ppm threshold requirement.

(3) MSL, Peak Temp. - The Moisture Sensitivity Level rating according to the JEDEC industry standard classifications, and peak solder temperature.

(4) There may be additional marking, which relates to the logo, the lot trace code information, or the environmental category on the device.

(5) Multiple Device Markings will be inside parentheses. Only one Device Marking contained in parentheses and separated by a "~" will appear on a device. If a line is indented then it is a continuation of the previous line and the two combined represent the entire Device Marking for that device.

(6) Lead finish/Ball material - Orderable Devices may have multiple material finish options. Finish options are separated by a vertical ruled line. Lead finish/Ball material values may wrap to two lines if the finish value exceeds the maximum column width.

Important Information and Disclaimer: The information provided on this page represents TI's knowledge and belief as of the date that it is provided. TI bases its knowledge and belief on information provided by third parties, and makes no representation or warranty as to the accuracy of such information. Efforts are underway to better integrate information from third parties. TI has taken and continues to take reasonable steps to provide representative and accurate information but may not have conducted destructive testing or chemical analysis on incoming materials and chemicals. TI and TI suppliers consider certain information to be proprietary, and thus CAS numbers and other limited information may not be available for release.

In no event shall TI's liability arising out of such information exceed the total purchase price of the TI part(s) at issue in this document sold by TI to Customer on an annual basis.

OTHER QUALIFIED VERSIONS OF TPS2041B, TPS2042B, TPS2051B :

- Automotive : TPS2041B-Q1, TPS2042B-Q1, TPS2051B-Q1
- Enhanced Product : TPS2041B-EP

NOTE: Qualified Version Definitions:

- Automotive - Q100 devices qualified for high-reliability automotive applications targeting zero defects
- Enhanced Product - Supports Defense, Aerospace and Medical Applications

TAPE AND REEL INFORMATION

REEL DIMENSIONS

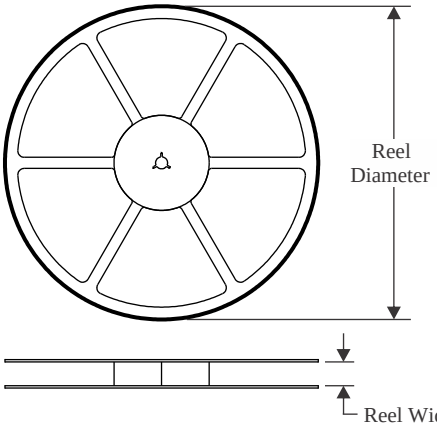

TAPE DIMENSIONS

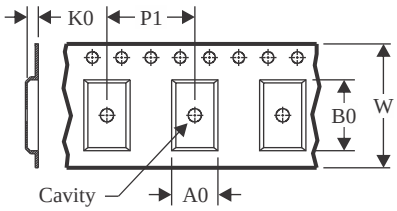

A0	Dimension designed to accommodate the component width
B0	Dimension designed to accommodate the component length
K0	Dimension designed to accommodate the component thickness
W	Overall width of the carrier tape
P1	Pitch between successive cavity centers

QUADRANT ASSIGNMENTS FOR PIN 1 ORIENTATION IN TAPE

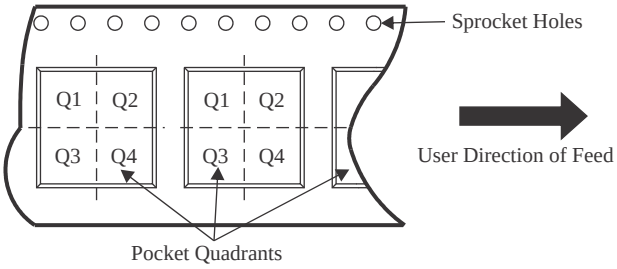

*All dimensions are nominal

Device	Package Type	Package Drawing	Pins	SPQ	Reel Diameter (mm)	Reel Width W1 (mm)	A0 (mm)	B0 (mm)	K0 (mm)	P1 (mm)	W (mm)	Pin1 Quadrant
TPS2041BDBVR	SOT-23	DBV	5	3000	179.0	8.4	3.2	3.2	1.4	4.0	8.0	Q3
TPS2041BDBVR	SOT-23	DBV	5	3000	178.0	9.0	3.23	3.17	1.37	4.0	8.0	Q3
TPS2041BDBVT	SOT-23	DBV	5	250	178.0	9.0	3.23	3.17	1.37	4.0	8.0	Q3
TPS2041BDBVT	SOT-23	DBV	5	250	180.0	8.4	3.2	3.2	1.4	4.0	8.0	Q3
TPS2041BDGNR	HVSSOP	DGN	8	2500	330.0	12.4	5.3	3.4	1.4	8.0	12.0	Q1
TPS2041BDGNR	HVSSOP	DGN	8	2500	330.0	12.4	5.3	3.3	1.3	8.0	12.0	Q1
TPS2041BDR	SOIC	D	8	2500	330.0	12.4	6.4	5.2	2.1	8.0	12.0	Q1
TPS2042BDGNR	HVSSOP	DGN	8	2500	330.0	12.4	5.3	3.3	1.3	8.0	12.0	Q1
TPS2042BDR	SOIC	D	8	2500	330.0	12.4	6.4	5.2	2.1	8.0	12.0	Q1
TPS2042BDRBR	SON	DRB	8	3000	330.0	12.4	3.3	3.3	1.0	8.0	12.0	Q2
TPS2042BDRBT	SON	DRB	8	250	180.0	12.4	3.3	3.3	1.0	8.0	12.0	Q2
TPS2043BDR	SOIC	D	16	2500	330.0	16.4	6.5	10.3	2.1	8.0	16.0	Q1
TPS2044BDR	SOIC	D	16	2500	330.0	16.4	6.5	10.3	2.1	8.0	16.0	Q1
TPS2051BDBVR	SOT-23	DBV	5	3000	180.0	8.4	3.2	3.2	1.4	4.0	8.0	Q3
TPS2051BDGNR	HVSSOP	DGN	8	2500	330.0	12.4	5.3	3.3	1.3	8.0	12.0	Q1
TPS2051BDGNR	HVSSOP	DGN	8	2500	330.0	12.4	5.3	3.4	1.4	8.0	12.0	Q1

Device	Package Type	Package Drawing	Pins	SPQ	Reel Diameter (mm)	Reel Width W1 (mm)	A0 (mm)	B0 (mm)	K0 (mm)	P1 (mm)	W (mm)	Pin1 Quadrant
TPS2051BDR	SOIC	D	8	2500	330.0	12.4	6.4	5.2	2.1	8.0	12.0	Q1
TPS2052BDGNR	HVSSOP	DGN	8	2500	330.0	12.4	5.3	3.3	1.3	8.0	12.0	Q1
TPS2052BDR	SOIC	D	8	2500	330.0	12.4	6.4	5.2	2.1	8.0	12.0	Q1
TPS2052BDRBR	SON	DRB	8	3000	330.0	12.4	3.3	3.3	1.0	8.0	12.0	Q2
TPS2052BDRBT	SON	DRB	8	250	180.0	12.4	3.3	3.3	1.0	8.0	12.0	Q2
TPS2053BDR	SOIC	D	16	2500	330.0	16.4	6.5	10.3	2.1	8.0	16.0	Q1
TPS2054BDR	SOIC	D	16	2500	330.0	16.4	6.5	10.3	2.1	8.0	16.0	Q1

TAPE AND REEL BOX DIMENSIONS

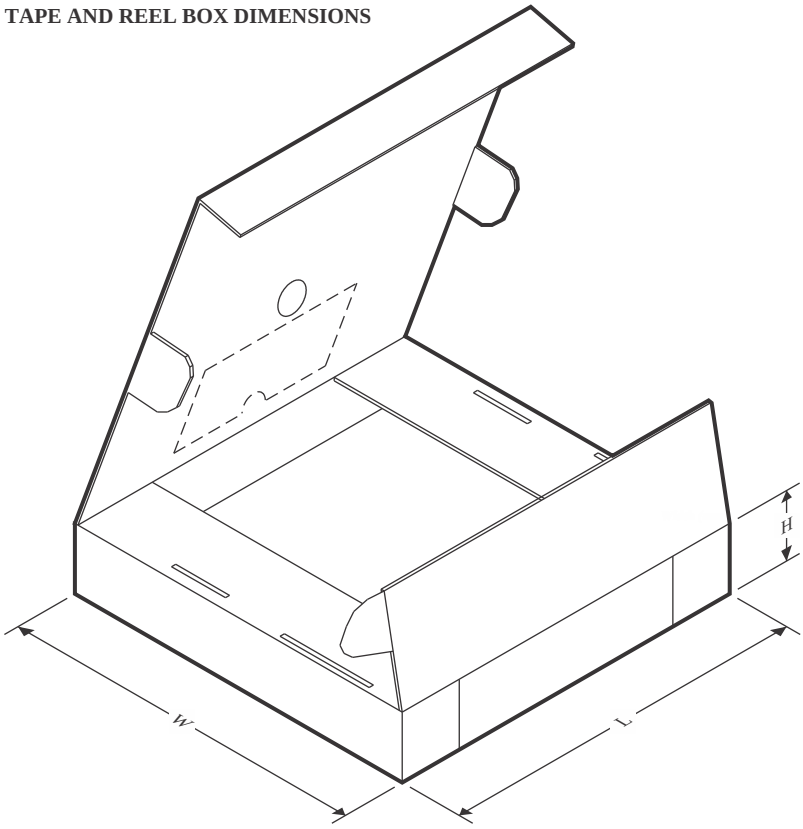

*All dimensions are nominal

Device	Package Type	Package Drawing	Pins	SPQ	Length (mm)	Width (mm)	Height (mm)
TPS2041BDBVR	SOT-23	DBV	5	3000	200.0	183.0	25.0
TPS2041BDBVR	SOT-23	DBV	5	3000	180.0	180.0	18.0
TPS2041BDBVT	SOT-23	DBV	5	250	180.0	180.0	18.0
TPS2041BDBVT	SOT-23	DBV	5	250	200.0	183.0	25.0
TPS2041BDGNR	HVSSOP	DGN	8	2500	364.0	364.0	27.0
TPS2041BDGNR	HVSSOP	DGN	8	2500	346.0	346.0	35.0
TPS2041BDR	SOIC	D	8	2500	353.0	353.0	32.0
TPS2042BDGNR	HVSSOP	DGN	8	2500	346.0	346.0	35.0
TPS2042BDR	SOIC	D	8	2500	353.0	353.0	32.0
TPS2042BDRBR	SON	DRB	8	3000	346.0	346.0	35.0
TPS2042BDRBT	SON	DRB	8	250	200.0	183.0	25.0
TPS2043BDR	SOIC	D	16	2500	353.0	353.0	32.0
TPS2044BDR	SOIC	D	16	2500	353.0	353.0	32.0
TPS2051BDBVR	SOT-23	DBV	5	3000	210.0	185.0	35.0
TPS2051BDGNR	HVSSOP	DGN	8	2500	346.0	346.0	35.0
TPS2051BDGNR	HVSSOP	DGN	8	2500	364.0	364.0	27.0
TPS2051BDR	SOIC	D	8	2500	353.0	353.0	32.0
TPS2052BDGNR	HVSSOP	DGN	8	2500	346.0	346.0	35.0

Device	Package Type	Package Drawing	Pins	SPQ	Length (mm)	Width (mm)	Height (mm)
TPS2052BDR	SOIC	D	8	2500	353.0	353.0	32.0
TPS2052BDRBR	SON	DRB	8	3000	346.0	346.0	35.0
TPS2052BDRBT	SON	DRB	8	250	200.0	183.0	25.0
TPS2053BDR	SOIC	D	16	2500	340.5	336.1	32.0
TPS2054BDR	SOIC	D	16	2500	353.0	353.0	32.0

TUBE

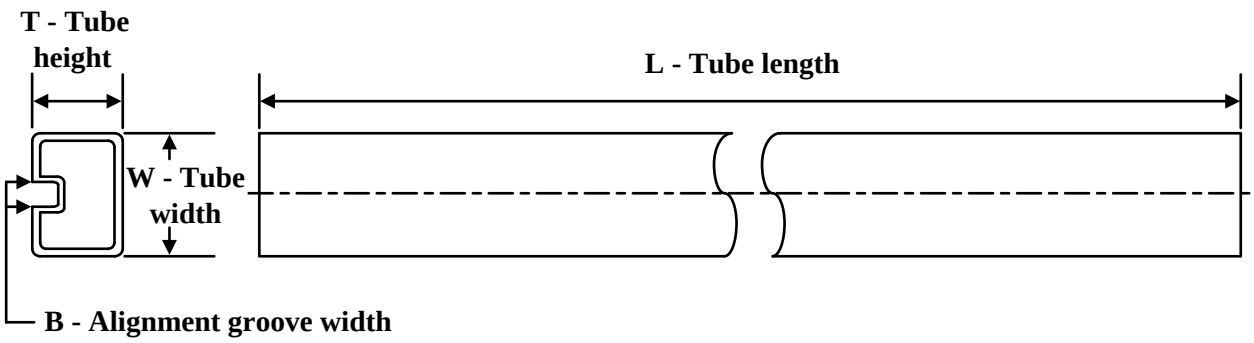

*All dimensions are nominal

Device	Package Name	Package Type	Pins	SPQ	L (mm)	W (mm)	T (µm)	B (mm)
TPS2041BD	D	SOIC	8	75	507	8	3940	4.32
TPS2041BDG4	D	SOIC	8	75	507	8	3940	4.32
TPS2041BDGN	DGN	HVSSOP	8	80	330	6.55	500	2.88
TPS2041BDGN	DGN	HVSSOP	8	80	322	6.55	1000	3.01
TPS2041BDGNG4	DGN	HVSSOP	8	80	330	6.55	500	2.88
TPS2041BDGNG4	DGN	HVSSOP	8	80	322	6.55	1000	3.01
TPS2042BD	D	SOIC	8	75	507	8	3940	4.32
TPS2042BDGN	DGN	HVSSOP	8	80	322	6.55	1000	3.01
TPS2042BDGNG4	DGN	HVSSOP	8	80	322	6.55	1000	3.01
TPS2043BD	D	SOIC	16	40	507	8	3940	4.32
TPS2044BD	D	SOIC	16	40	507	8	3940	4.32
TPS2044BDG4	D	SOIC	16	40	507	8	3940	4.32
TPS2051BD	D	SOIC	8	75	507	8	3940	4.32
TPS2051BDG4	D	SOIC	8	75	507	8	3940	4.32
TPS2051BDGN	DGN	HVSSOP	8	80	322	6.55	1000	3.01
TPS2051BDGN	DGN	HVSSOP	8	80	330	6.55	500	2.88
TPS2051BDGNG4	DGN	HVSSOP	8	80	322	6.55	1000	3.01
TPS2051BDGNG4	DGN	HVSSOP	8	80	330	6.55	500	2.88
TPS2052BDGN	DGN	HVSSOP	8	80	330	6.55	500	2.88
TPS2052BDGN	DGN	HVSSOP	8	80	322	6.55	1000	3.01
TPS2052BDGNG4	DGN	HVSSOP	8	80	322	6.55	1000	3.01
TPS2052BDGNG4	DGN	HVSSOP	8	80	330	6.55	500	2.88
TPS2053BD	D	SOIC	16	40	507	8	3940	4.32
TPS2054BD	D	SOIC	16	40	507	8	3940	4.32

GENERIC PACKAGE VIEW

DRB 8 VSON - 1 mm max height

PLASTIC SMALL OUTLINE - NO LEAD

Images above are just a representation of the package family, actual package may vary.
Refer to the product data sheet for package details.

4203482/L

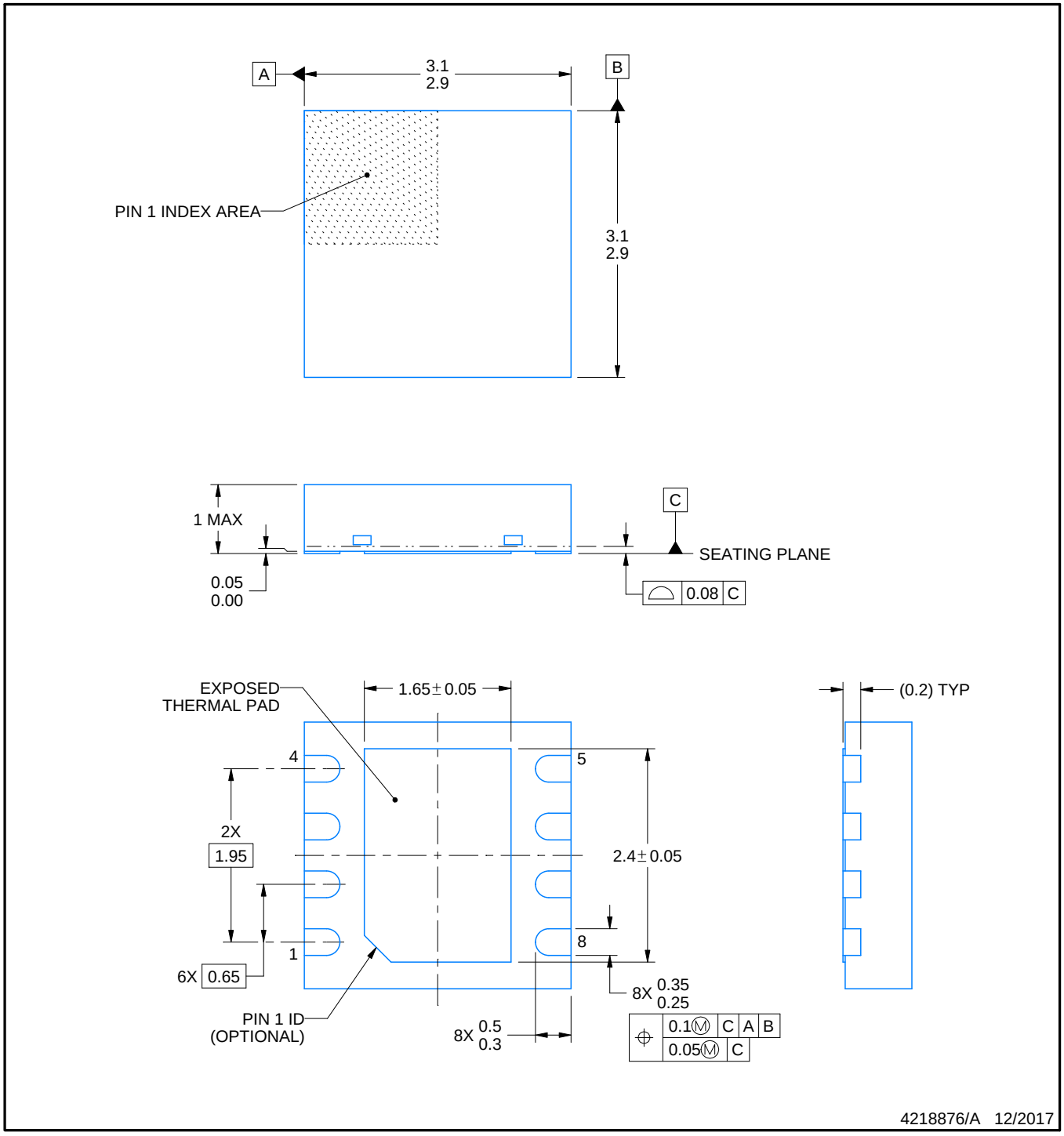

NOTES:

1. All linear dimensions are in millimeters. Any dimensions in parenthesis are for reference only. Dimensioning and tolerancing per ASME Y14.5M.
2. This drawing is subject to change without notice.
3. The package thermal pad must be soldered to the printed circuit board for thermal and mechanical performance.

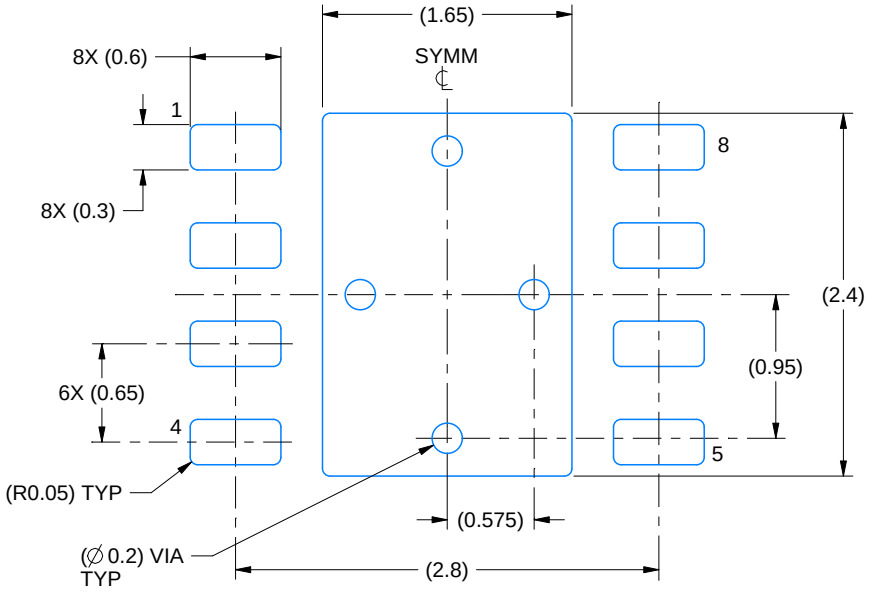

LAND PATTERN EXAMPLE
SCALE:20X

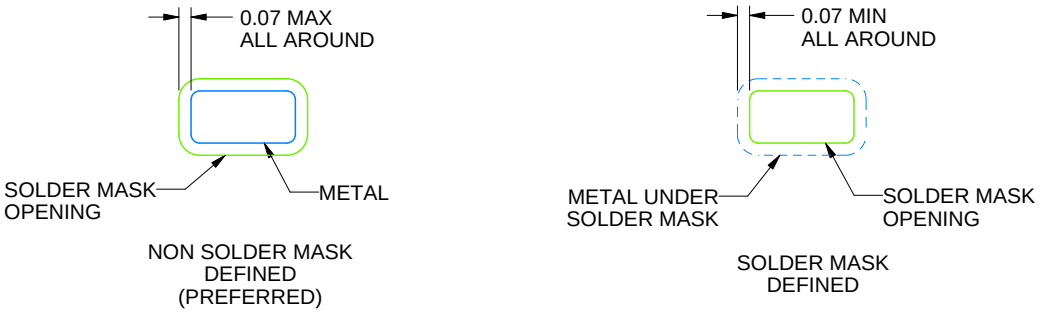

SOLDER MASK DETAILS

4218876/A 12/2017

NOTES: (continued)

4. This package is designed to be soldered to a thermal pad on the board. For more information, see Texas Instruments literature number SLUA271 (www.ti.com/lit/slua271).
5. Vias are optional depending on application, refer to device data sheet. If any vias are implemented, refer to their locations shown on this view. It is recommended that vias under paste be filled, plugged or tented.

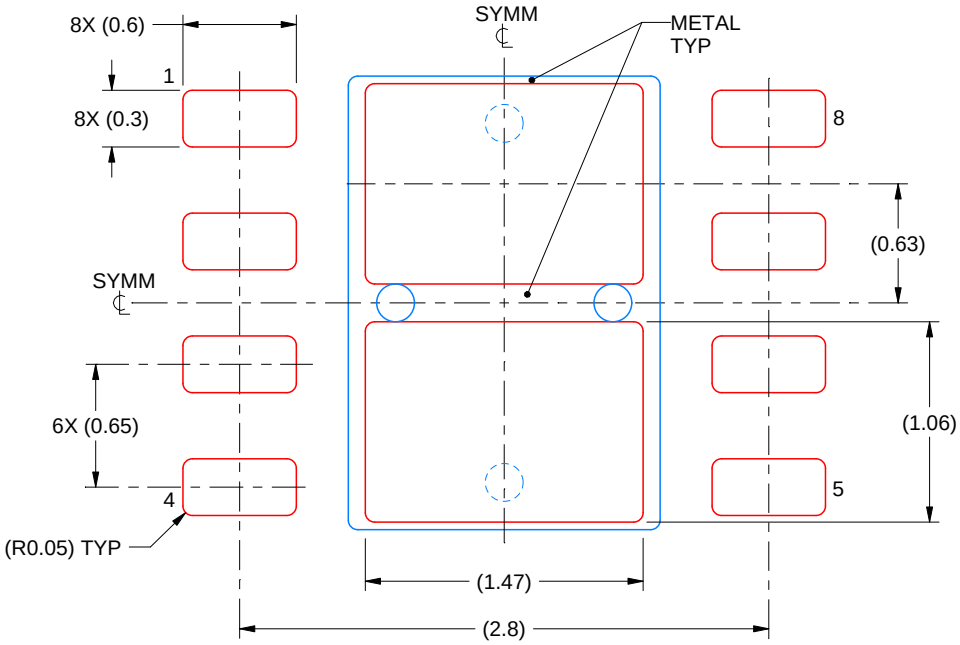

SOLDER PASTE EXAMPLE
BASED ON 0.125 mm THICK STENCIL

EXPOSED PAD
81% PRINTED SOLDER COVERAGE BY AREA
SCALE:25X

4218876/A 12/2017

NOTES: (continued)

6. Laser cutting apertures with trapezoidal walls and rounded corners may offer better paste release. IPC-7525 may have alternate design recommendations.

D (R–PDSO–G16) PLASTIC SMALL OUTLINE

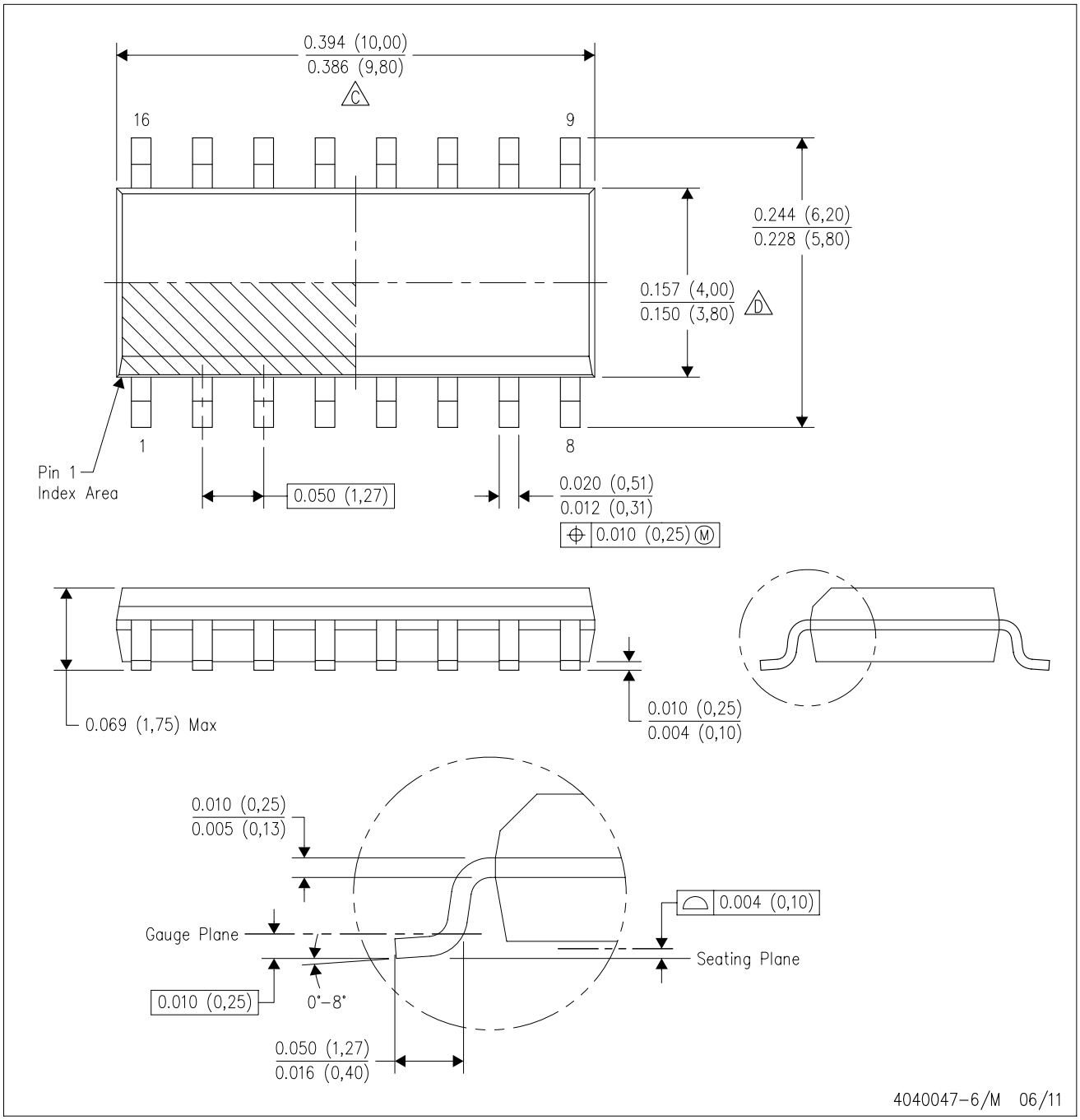

NOTES:
A. All linear dimensions are in inches (millimeters).
B. This drawing is subject to change without notice.
C. Body length does not include mold flash, protrusions, or gate burrs. Mold flash, protrusions, or gate burrs shall not exceed 0.006 (0,15) each side.
D. Body width does not include interlead flash. Interlead flash shall not exceed 0.017 (0,43) each side.
E. Reference JEDEC MS–012 variation AC.

D (R–PDSO–G16) PLASTIC SMALL OUTLINE

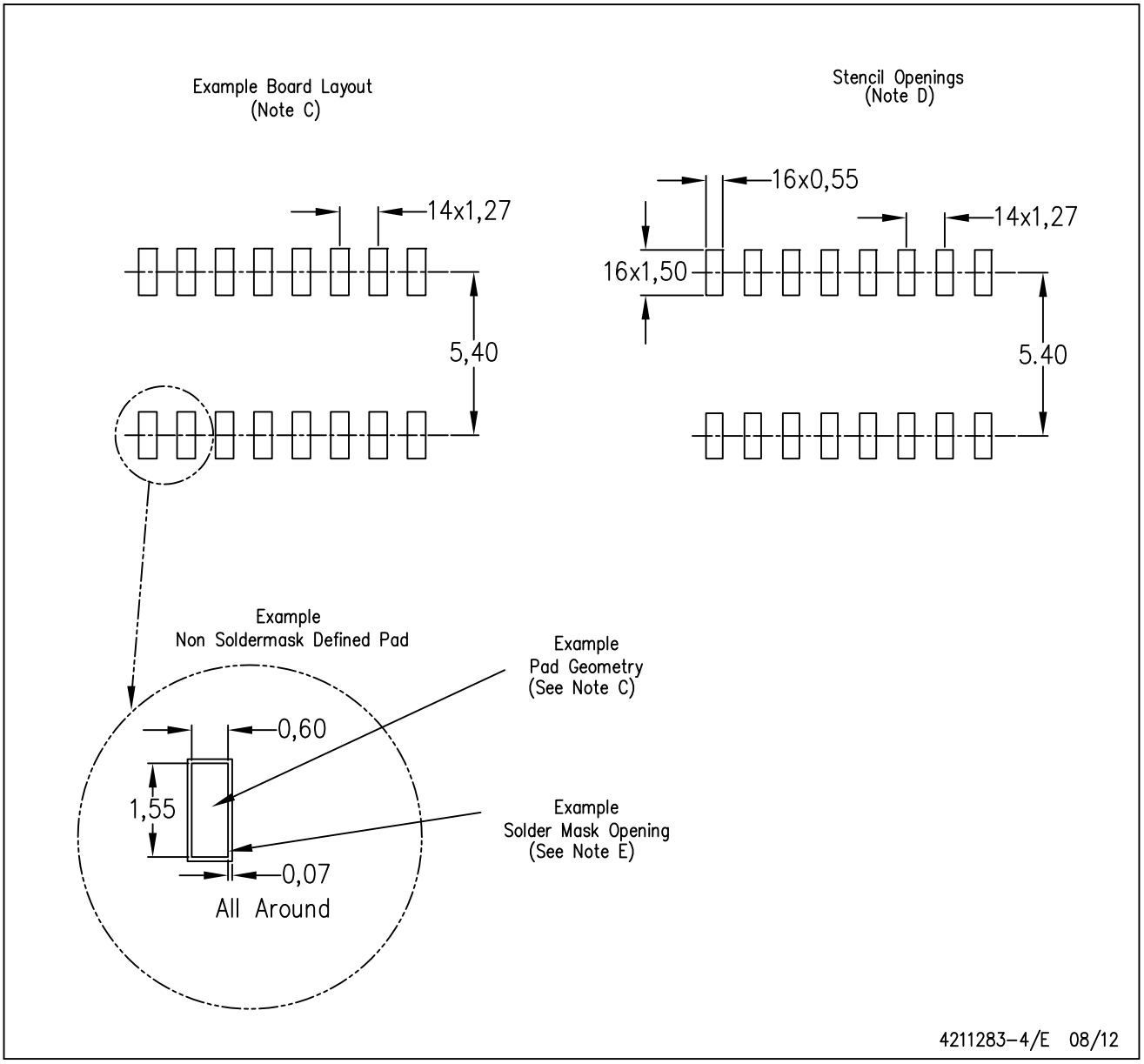

NOTES:
A. All linear dimensions are in millimeters.
B. This drawing is subject to change without notice.
C. Publication IPC–7351 is recommended for alternate designs.
D. Laser cutting apertures with trapezoidal walls and also rounding corners will offer better paste release. Customers should contact their board assembly site for stencil design recommendations. Refer to IPC–7525 for other stencil recommendations.
E. Customers should contact their board fabrication site for solder mask tolerances between and around signal pads.

GENERIC PACKAGE VIEW

DGN 8

PowerPAD VSSOP - 1.1 mm max height

3 x 3, 0.65 mm pitch

SMALL OUTLINE PACKAGE

This image is a representation of the package family, actual package may vary.
Refer to the product data sheet for package details.

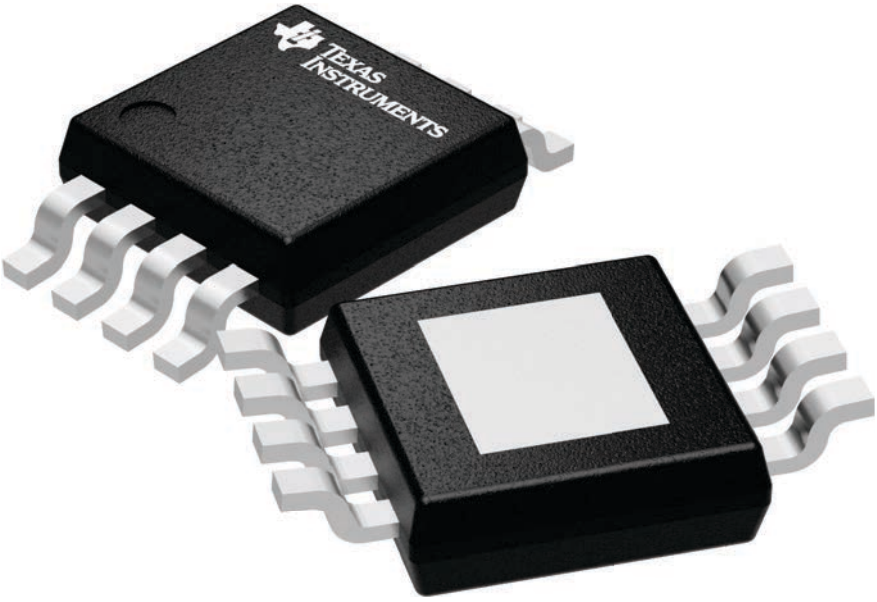

4225482/A

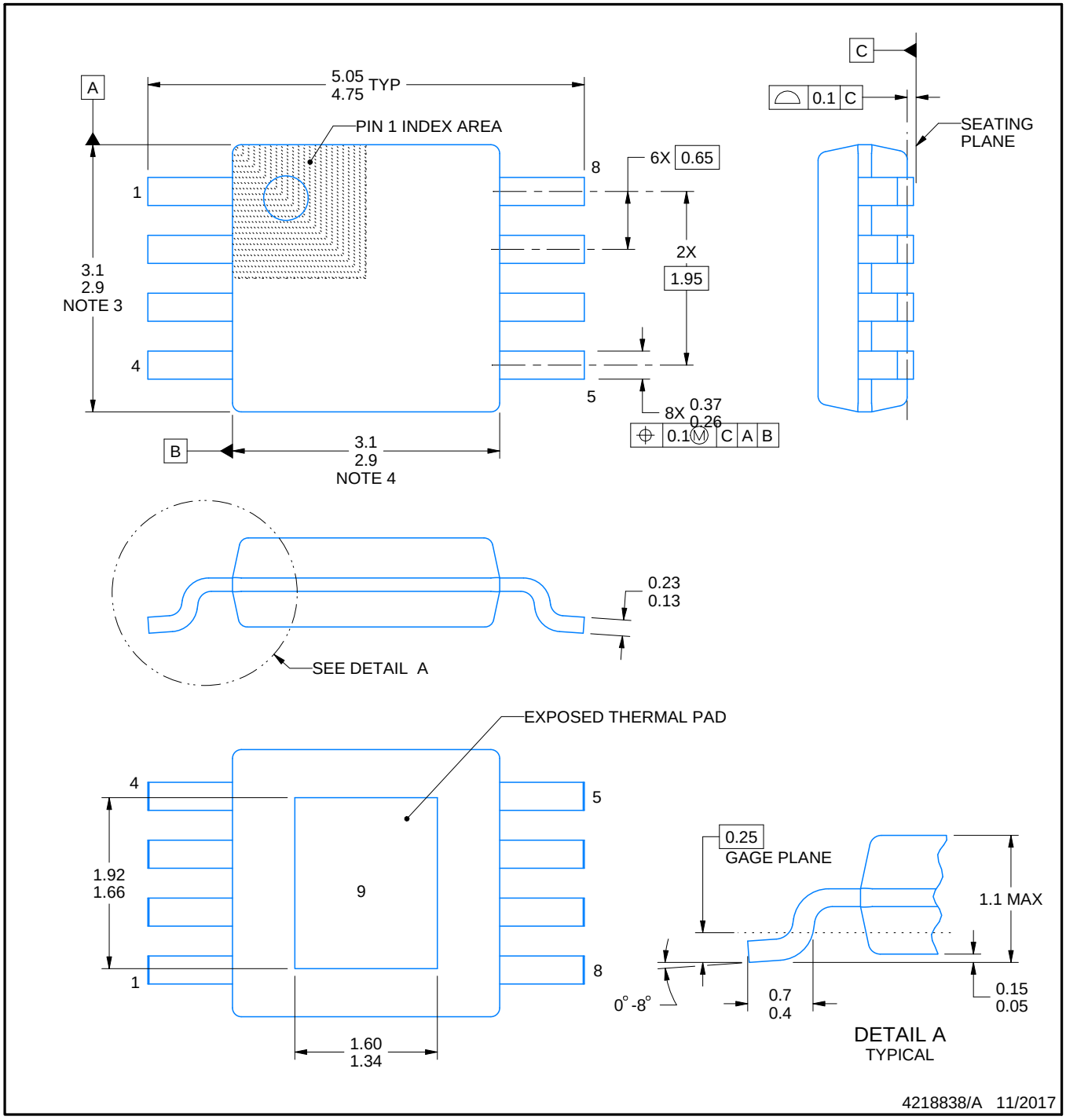

NOTES:

1. All linear dimensions are in millimeters. Any dimensions in parenthesis are for reference only. Dimensioning and tolerancing per ASME Y14.5M.
2. This drawing is subject to change without notice.
3. This dimension does not include mold flash, protrusions, or gate burrs. Mold flash, protrusions, or gate burrs shall not exceed 0.15 mm per side.
4. This dimension does not include interlead flash. Interlead flash shall not exceed 0.25 mm per side.
5. Reference JEDEC registration MO-187.

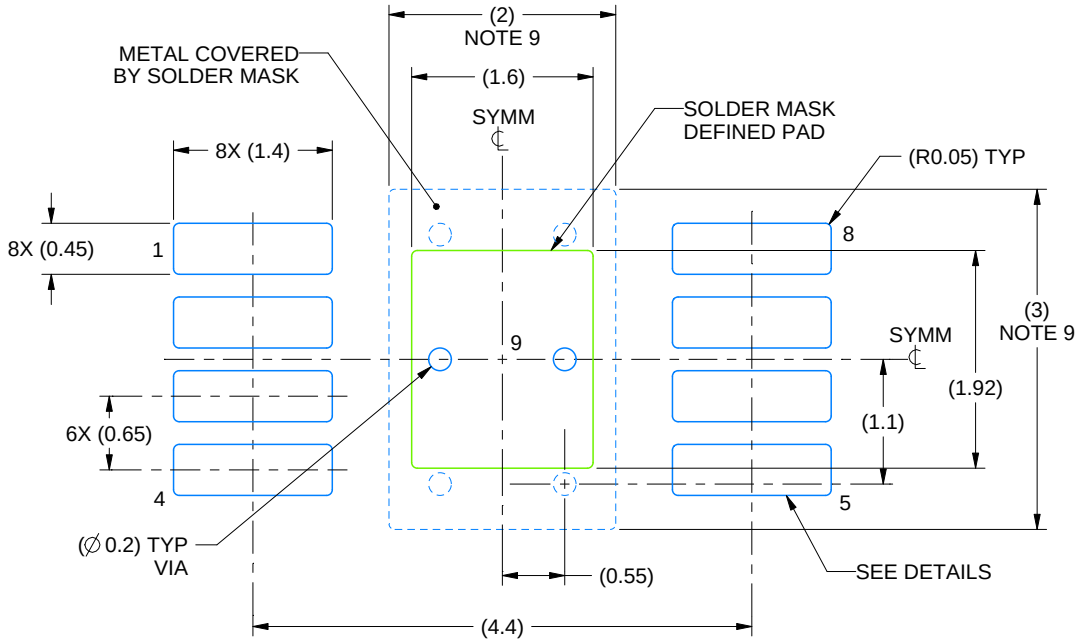

LAND PATTERN EXAMPLE
EXPOSED METAL SHOWN
SCALE: 15X

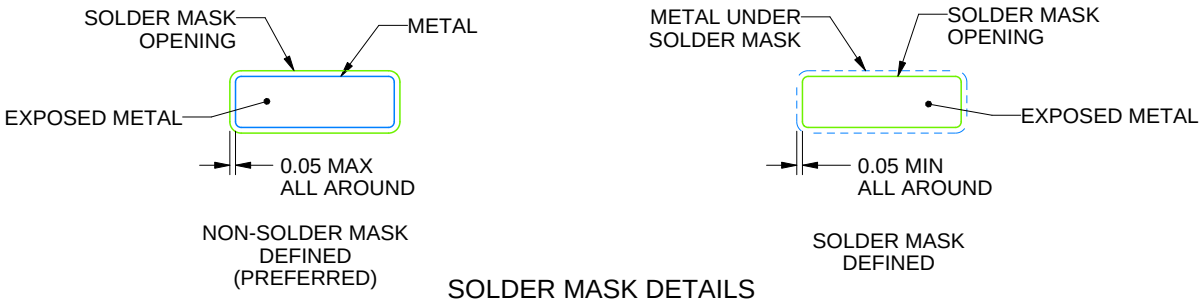

SOLDER MASK DETAILS

4218838/A 11/2017

NOTES: (continued)

6. Publication IPC-7351 may have alternate designs.
7. Solder mask tolerances between and around signal pads can vary based on board fabrication site.
8. Vias are optional depending on application, refer to device data sheet. If any vias are implemented, refer to their locations shown on this view. It is recommended that vias under paste be filled, plugged or tented.
9. Size of metal pad may vary due to creepage requirement.

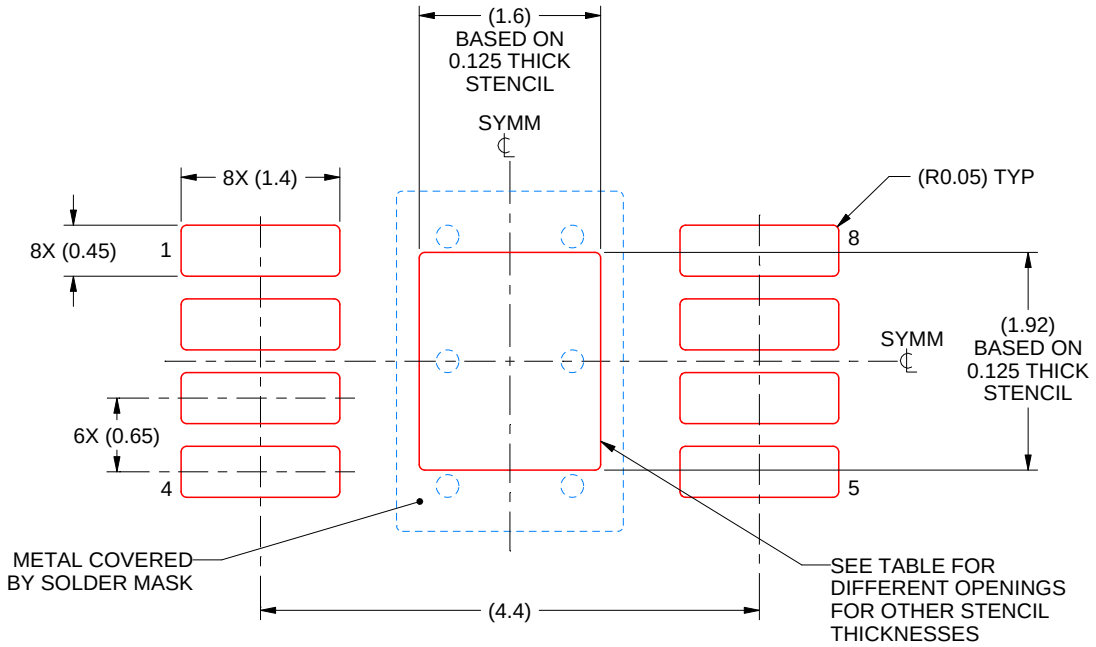

SOLDER PASTE EXAMPLE
EXPOSED PAD 9:
100% PRINTED SOLDER COVERAGE BY AREA
SCALE: 15X

STENCIL THICKNESS	SOLDER STENCIL OPENING
0.1	1.79 X 2.15
0.125	1.60 X 1.92 (SHOWN)
0.15	1.46 X 1.75
0.175	1.35 X 1.62

4218838/A 11/2017

NOTES: (continued)

10. Laser cutting apertures with trapezoidal walls and rounded corners may offer better paste release. IPC-7525 may have alternate design recommendations.
11. Board assembly site may have different recommendations for stencil design.

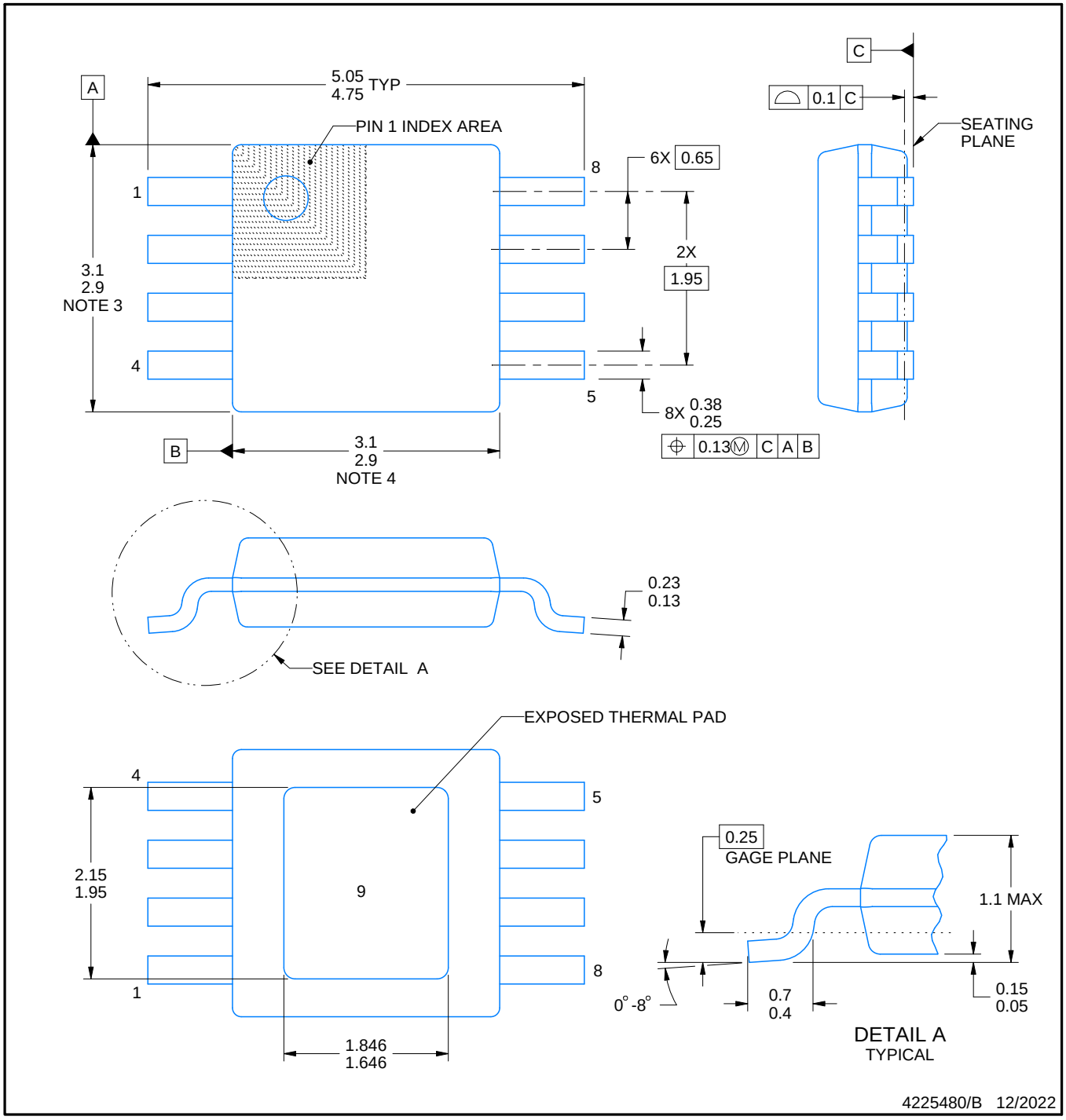

PowerPAD is a trademark of Texas Instruments.

NOTES:

1. All linear dimensions are in millimeters. Any dimensions in parenthesis are for reference only. Dimensioning and tolerancing per ASME Y14.5M.
2. This drawing is subject to change without notice.
3. This dimension does not include mold flash, protrusions, or gate burrs. Mold flash, protrusions, or gate burrs shall not exceed 0.15 mm per side.
4. This dimension does not include interlead flash. Interlead flash shall not exceed 0.25 mm per side.
5. Reference JEDEC registration MO-187.

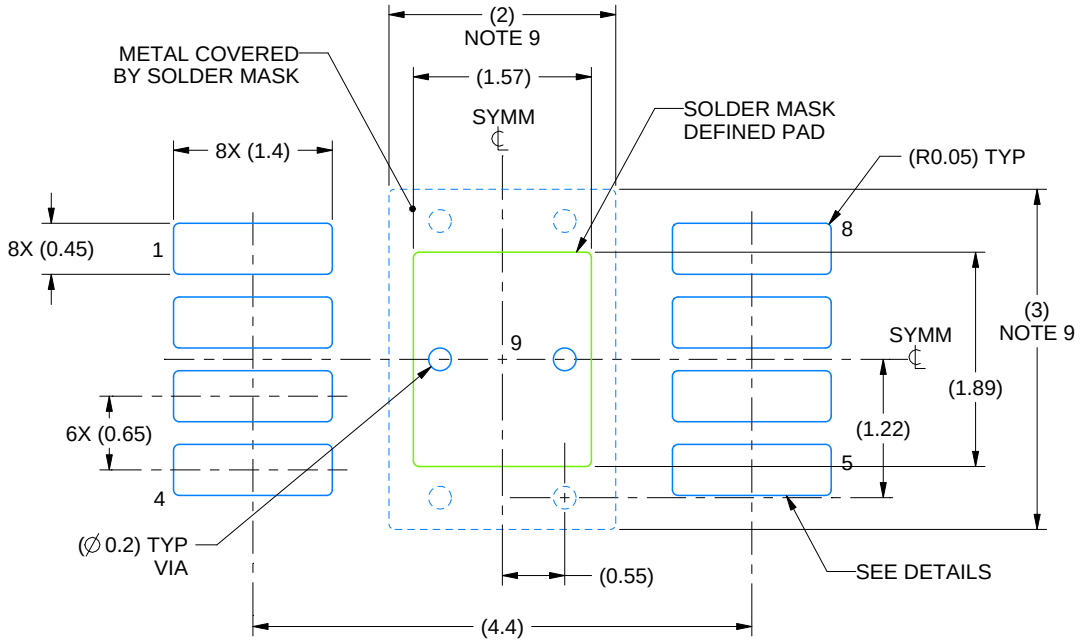

LAND PATTERN EXAMPLE
EXPOSED METAL SHOWN
SCALE: 15X

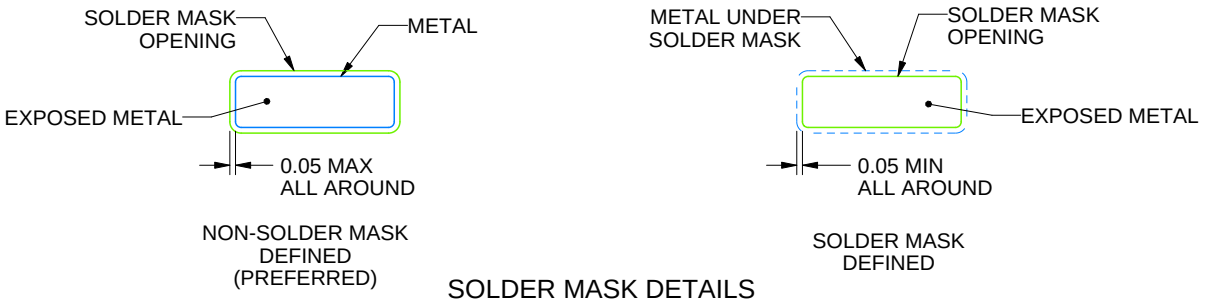

SOLDER MASK DETAILS

4225480/B 12/2022

NOTES: (continued)

6. Publication IPC-7351 may have alternate designs.
7. Solder mask tolerances between and around signal pads can vary based on board fabrication site.
8. Vias are optional depending on application, refer to device data sheet. If any vias are implemented, refer to their locations shown on this view. It is recommended that vias under paste be filled, plugged or tented.
9. Size of metal pad may vary due to creepage requirement.

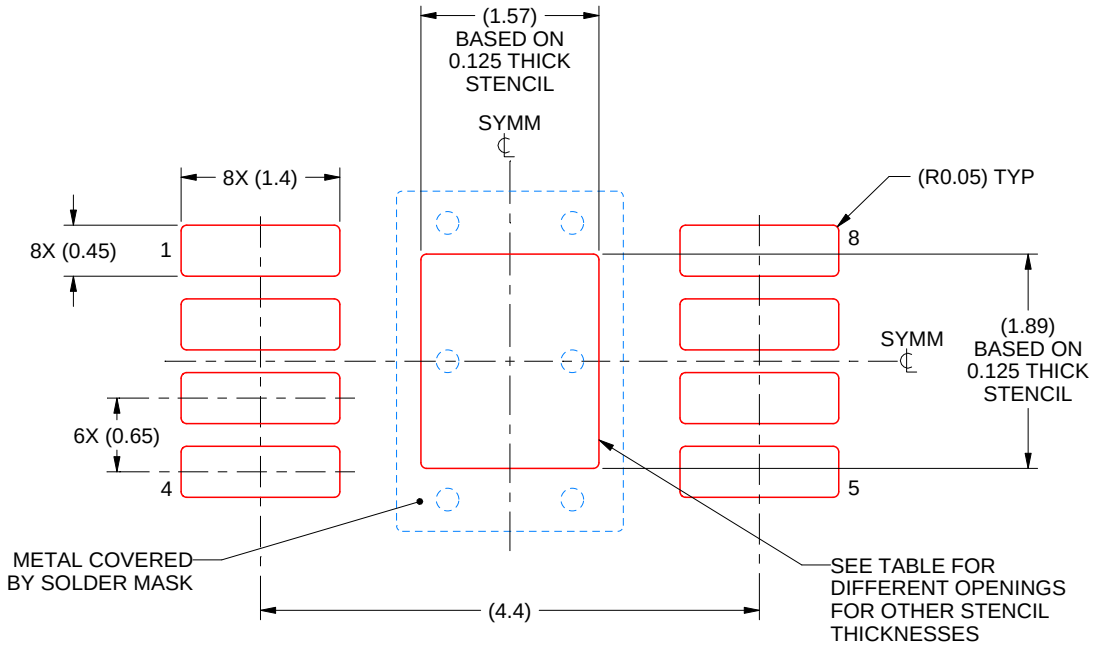

SOLDER PASTE EXAMPLE
EXPOSED PAD 9:
100% PRINTED SOLDER COVERAGE BY AREA
SCALE: 15X

STENCIL THICKNESS	SOLDER STENCIL OPENING
0.1	1.76 X 2.11
0.125	1.57 X 1.89 (SHOWN)
0.15	1.43 X 1.73
0.175	1.33 X 1.60

4225480/B 12/2022

NOTES: (continued)

10. Laser cutting apertures with trapezoidal walls and rounded corners may offer better paste release. IPC-7525 may have alternate design recommendations.
11. Board assembly site may have different recommendations for stencil design.

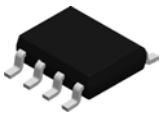

PACKAGE OUTLINE

D0008A

SOIC - 1.75 mm max height

SMALL OUTLINE INTEGRATED CIRCUIT

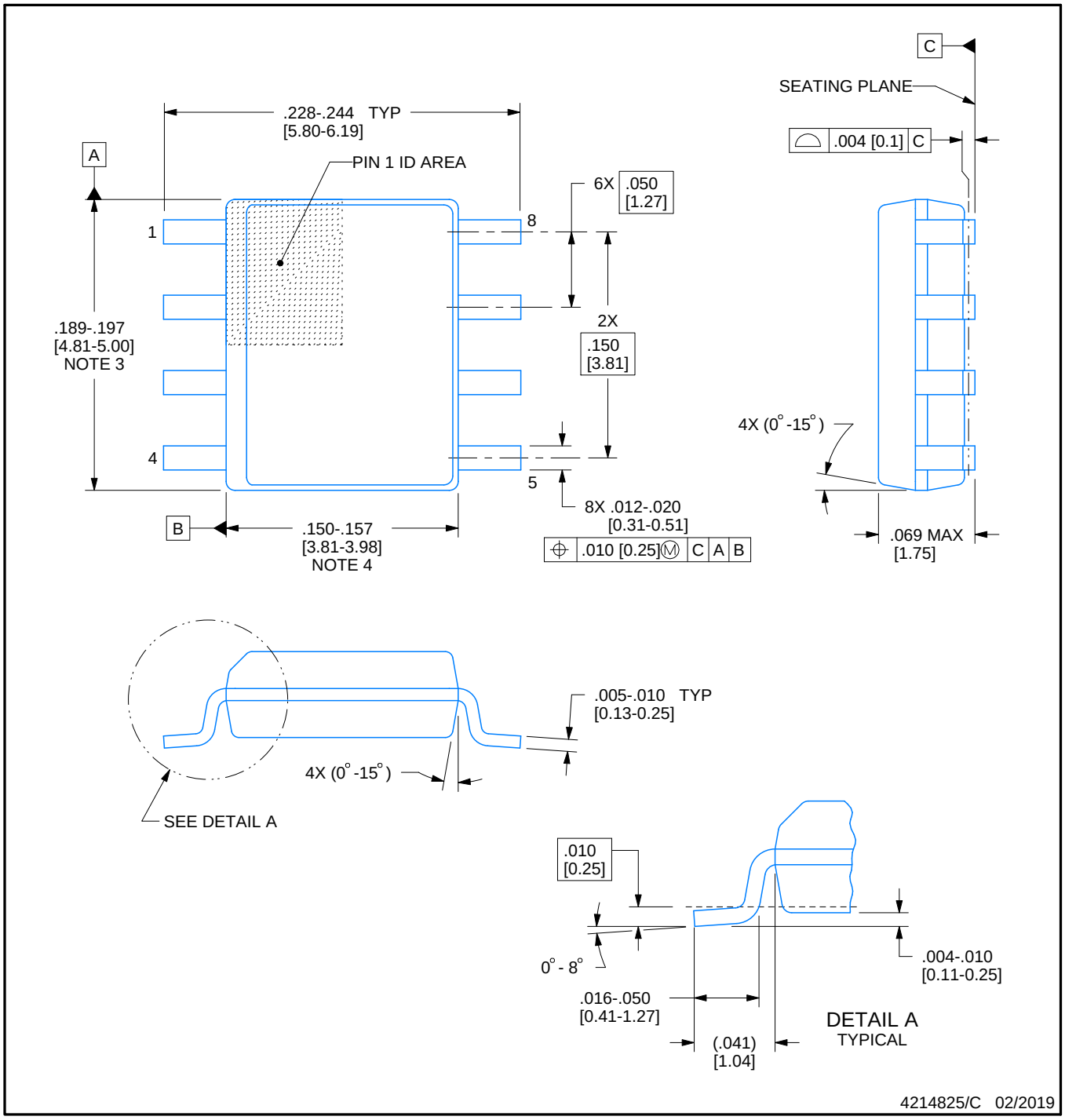

NOTES:

1. Linear dimensions are in inches [millimeters]. Dimensions in parenthesis are for reference only. Controlling dimensions are in inches. Dimensioning and tolerancing per ASME Y14.5M.
2. This drawing is subject to change without notice.
3. This dimension does not include mold flash, protrusions, or gate burrs. Mold flash, protrusions, or gate burrs shall not exceed .006 [0.15] per side.
4. This dimension does not include interlead flash.
5. Reference JEDEC registration MS-012, variation AA.

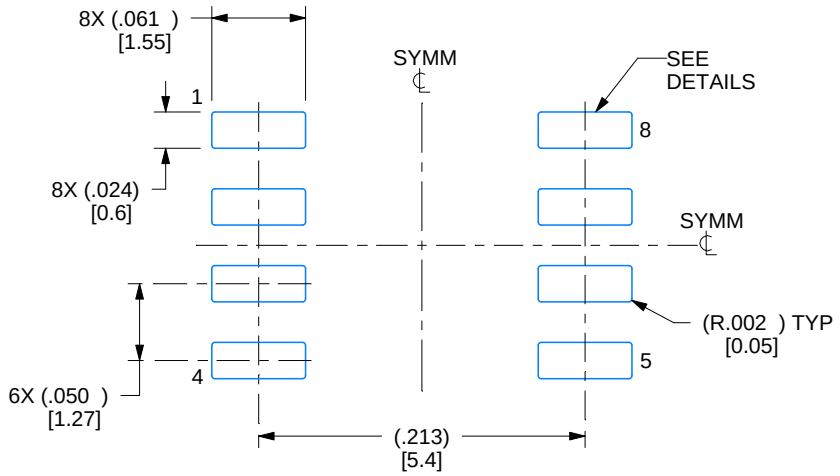

LAND PATTERN EXAMPLE
EXPOSED METAL SHOWN
SCALE:8X

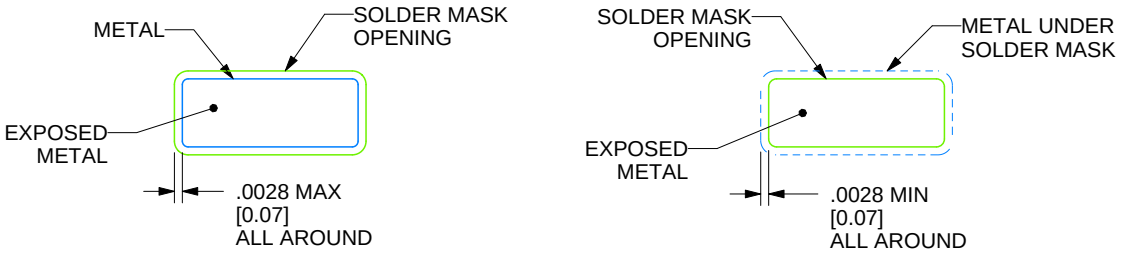

SOLDER MASK DETAILS

4214825/C 02/2019

NOTES: (continued)

6. Publication IPC-7351 may have alternate designs.
7. Solder mask tolerances between and around signal pads can vary based on board fabrication site.

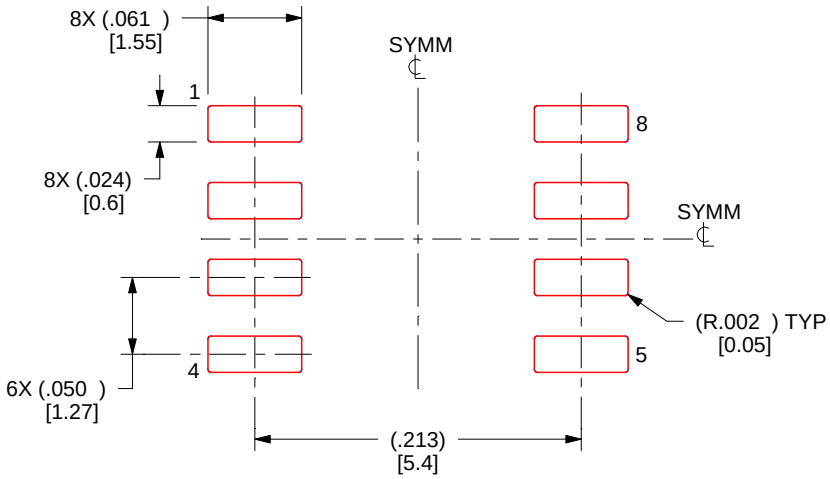

SOLDER PASTE EXAMPLE
BASED ON .005 INCH [0.125 MM] THICK STENCIL
SCALE:8X

4214825/C 02/2019

NOTES: (continued)

8. Laser cutting apertures with trapezoidal walls and rounded corners may offer better paste release. IPC-7525 may have alternate design recommendations.
9. Board assembly site may have different recommendations for stencil design.

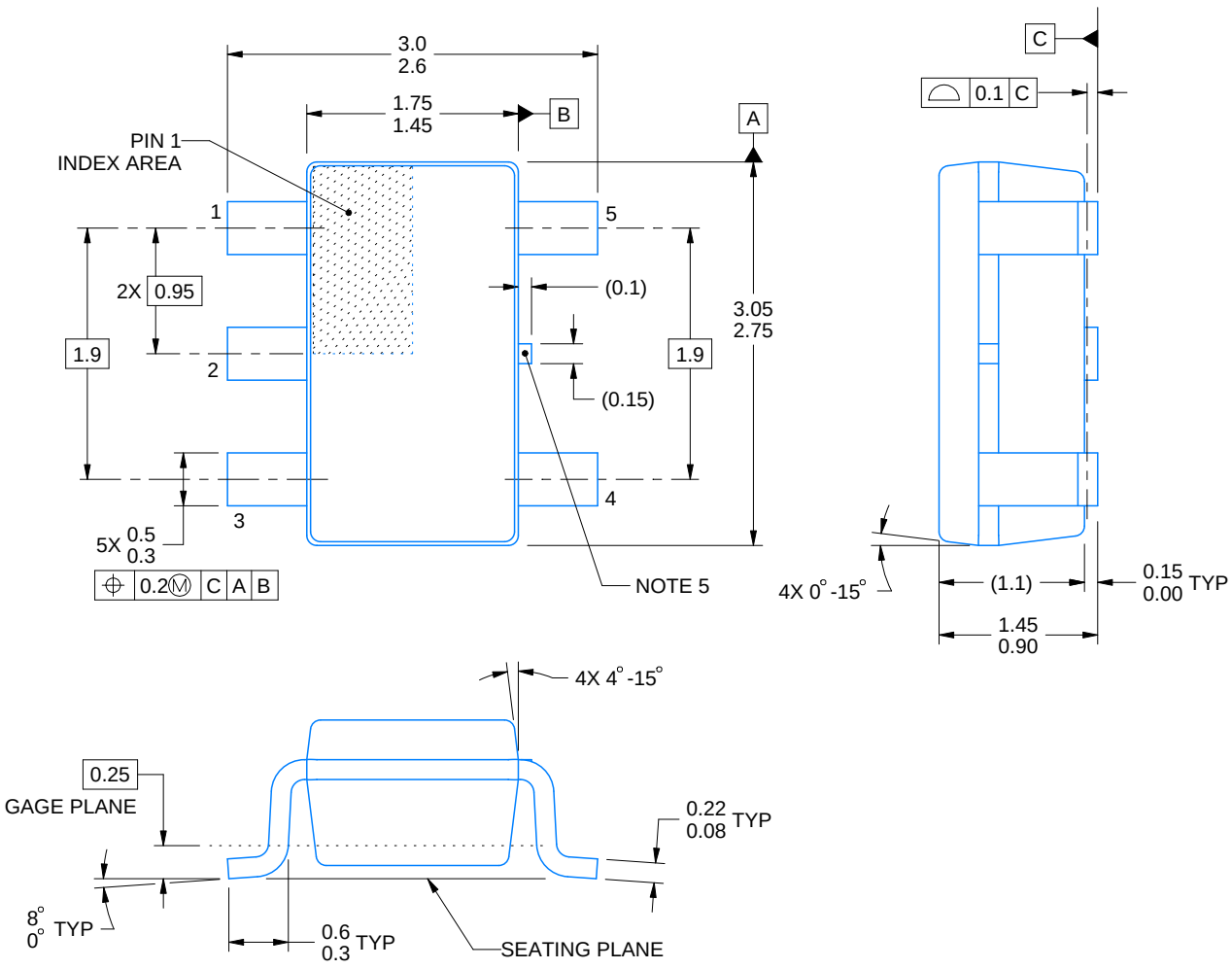

4214839/K 08/2024

NOTES:

1. All linear dimensions are in millimeters. Any dimensions in parenthesis are for reference only. Dimensioning and tolerancing per ASME Y14.5M.
2. This drawing is subject to change without notice.
3. Refernce JEDEC MO-178.
4. Body dimensions do not include mold flash, protrusions, or gate burrs. Mold flash, protrusions, or gate burrs shall not exceed 0.25 mm per side.
5. Support pin may differ or may not be present.

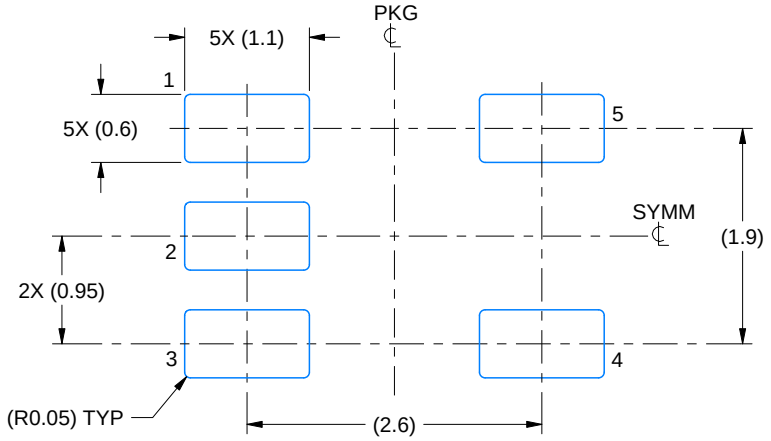

LAND PATTERN EXAMPLE
EXPOSED METAL SHOWN
SCALE:15X

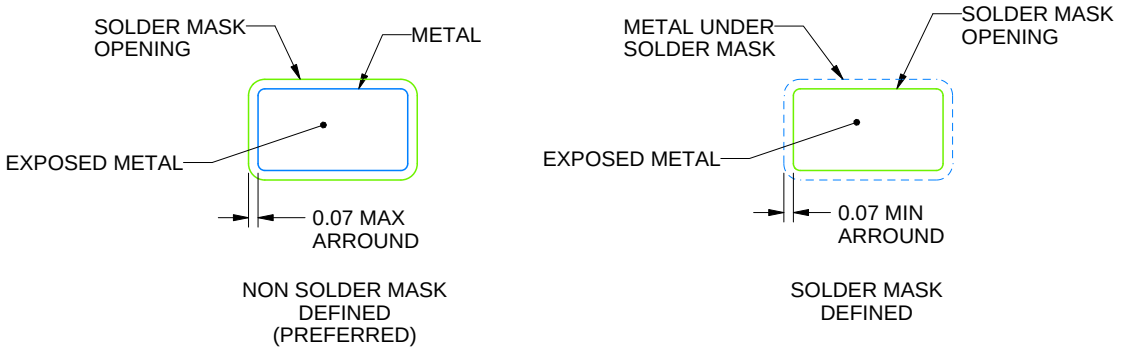

SOLDER MASK DETAILS

4214839/K 08/2024

NOTES: (continued)

6. Publication IPC-7351 may have alternate designs.
7. Solder mask tolerances between and around signal pads can vary based on board fabrication site.

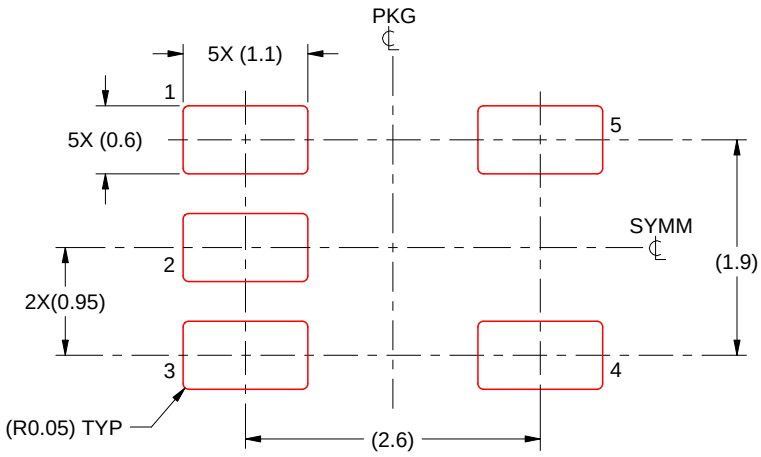

SOLDER PASTE EXAMPLE
BASED ON 0.125 mm THICK STENCIL
SCALE:15X

4214839/K 08/2024

NOTES: (continued)

8. Laser cutting apertures with trapezoidal walls and rounded corners may offer better paste release. IPC-7525 may have alternate design recommendations.
9. Board assembly site may have different recommendations for stencil design.

IMPORTANT NOTICE AND DISCLAIMER

TI PROVIDES TECHNICAL AND RELIABILITY DATA (INCLUDING DATA SHEETS), DESIGN RESOURCES (INCLUDING REFERENCE DESIGNS), APPLICATION OR OTHER DESIGN ADVICE, WEB TOOLS, SAFETY INFORMATION, AND OTHER RESOURCES “AS IS” AND WITH ALL FAULTS, AND DISCLAIMS ALL WARRANTIES, EXPRESS AND IMPLIED, INCLUDING WITHOUT LIMITATION ANY IMPLIED WARRANTIES OF MERCHANTABILITY, FITNESS FOR A PARTICULAR PURPOSE OR NON-INFRINGEMENT OF THIRD PARTY INTELLECTUAL PROPERTY RIGHTS.

These resources are intended for skilled developers designing with TI products. You are solely responsible for (1) selecting the appropriate TI products for your application, (2) designing, validating and testing your application, and (3) ensuring your application meets applicable standards, and any other safety, security, regulatory or other requirements.

These resources are subject to change without notice. TI grants you permission to use these resources only for development of an application that uses the TI products described in the resource. Other reproduction and display of these resources is prohibited. No license is granted to any other TI intellectual property right or to any third party intellectual property right. TI disclaims responsibility for, and you will fully indemnify TI and its representatives against, any claims, damages, costs, losses, and liabilities arising out of your use of these resources.

TI’s products are provided subject to TI’s Terms of Sale or other applicable terms available either on ti.com or provided in conjunction with such TI products. TI’s provision of these resources does not expand or otherwise alter TI’s applicable warranties or warranty disclaimers for TI products.

TI objects to and rejects any additional or different terms you may have proposed.

Mailing Address: Texas Instruments, Post Office Box 655303, Dallas, Texas 75265
Copyright © 2024, Texas Instruments Incorporated