- **Extended Temperature Performance of –40°C to 125°C**
- **Optimized for Off-line and DC to DC Converters**
- **Low Start Up Current (<0.5 mA)**
- **Trimmed Oscillator Discharge Current**
- **Automatic Feed Forward Compensation**
- **Pulse-by-Pulse Current Limiting**
- **Enhanced Load Response Characteristics**
- **Under-Voltage Lockout With Hysteresis**
- **Double Pulse Suppression**
- **High Current Totem Pole Output**
- **Internally Trimmed Bandgap Reference**
- **500 kHz Operation**
- **Low $R_O$ Error Amp**

**D 8-PIN PACKAGE (TOP VIEW)**

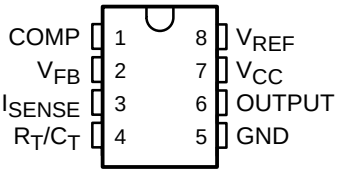


**D 14-PIN PACKAGE (TOP VIEW)**

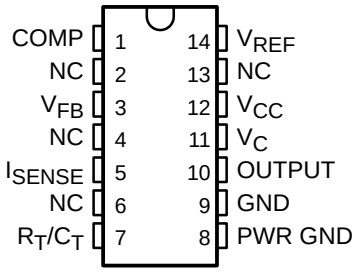


## description

The UC2842A/3A/4A/5A family of control ICs is a pin for pin compatible improved version of the UC2842/3/4/5 family. Providing the necessary features to control current mode switched mode power supplies, this family has the following improved features. Start up current is guaranteed to be less than 0.5 mA. Oscillator discharge is trimmed to 8.3 mA. During under voltage lockout, the output stage can sink at least 10 mA at less than 1.2 V for $V_{CC}$ over 5 V.

The difference between members of this family are shown in the table below.

| PART NUMBER | UVLO ON | UVLO OFF | MAXIMUM DUTY CYCLE |
|---|---|---|---|
| UC2842A | 16 V | 10 V | <100% |
| UC2843A | 8.5 V | 7.9 V | <100% |
| UC2844A | 16 V | 10 V | <50% |
| UC2845A | 8.5 V | 7.9 V | <50% |

Please be aware that an important notice concerning availability, standard warranty, and use in critical applications of Texas Instruments semiconductor products and disclaimers thereto appears at the end of this data sheet.

PRODUCTION DATA information is current as of publication date. Products conform to specifications per the terms of Texas Instruments standard warranty. Production processing does not necessarily include testing of all parameters.

Copyright © 2003, Texas Instruments Incorporated

## ORDERING INFORMATION†

| $T_A$ | PACKAGE‡ | | ORDERABLE PART NUMBER | TOP-SIDE MARKING |
|---|---|---|---|---|
| –40°C to 125°C | SOIC-8 – D8 | Tape and reel | UC2842AQD8R | 2842AQ |
| | SOIC-8 – D8 | Tube | UC2842AQD8 | 2842AQ |
| | SOIC-14 – D | Tape and reel | UC2842AQDR | 2842AQ |
| | SOIC-14 – D | Tube | UC2842AQD | 2842AQ |
| | SOIC-8 – D8 | Tape and reel | UC2843AQD8R | 2843AQ |
| | SOIC-8 – D8 | Tube | UC2843AQD8 | 2843AQ |
| | SOIC-14 – D | Tape and reel | UC2843AQDR | 2843AQ |
| | SOIC-14 – D | Tube | UC2843AQD | 2843AQ |
| | SOIC-8 – D8 | Tape and reel | UC2844AQD8R | 2844AQ |
| | SOIC-8 – D8 | Tube | UC2844AQD8 | 2844AQ |
| | SOIC-14 – D | Tape and reel | UC2844AQDR | 2844AQ |
| | SOIC-14 – D | Tube | UC2844AQD | 2844AQ |
| | SOIC-8 – D8 | Tape and reel | UC2845AQD8R | 2845AQ |
| | SOIC-8 – D8 | Tube | UC2845AQD8 | 2845AQ |
| | SOIC-14 – D | Tape and reel | UC2845AQDR | 2845AQ |
| | SOIC-14 – D | Tube | UC2845AQD | 2845AQ |

† Package drawings, standard packing quantities, thermal data, symbolization, and PCB design guidelines are available at www.ti.com/sc/package.

## block diagram

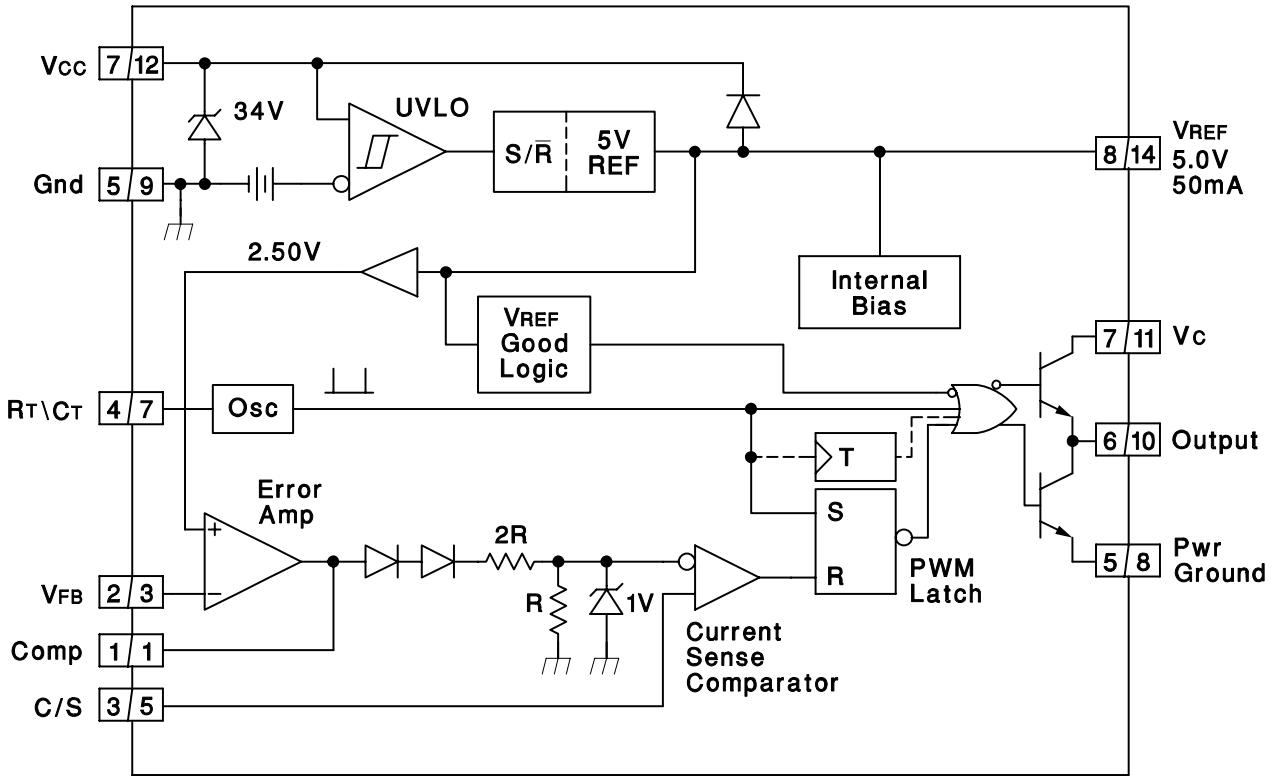


NOTES: 1. A = DIL-8 Pin Number. B = SO-14 Pin Number.
2. Toggle flip flop used only in 2844A and 2845A.

## Ordering Information

**UC 284 4 A Q D R**

- **R** — **TAPE and REEL INDICATOR**
- **D** — **PACKAGE**
  - D = Plastic SOIC, 14 pin
  - D8 = Plastic SOIC, 8 pin
- **Q** — **AUTOMOTIVE TEMPERATURE RANGE INDICATOR**
- **A** — **IMPROVED PERFORMANCE INDICATOR**
- **4** — **PRODUCT OPTION**
  - 2 through 5

## absolute maximum ratings over operating free-air temperature range (unless otherwise noted)†‡

$V_{CC}$ voltage (low impedance source) . . . . . 30 V
$V_{CC}$ voltage ($I_{CC}$ mA) . . . . . self limiting
Output current, $I_O$ . . . . . ±1 A
Output energy (capacitive load) . . . . . 5 µJ
Analog Inputs (pins 3, 5) . . . . . –0.3 V to 6.3 V
Error Amp Output Sink current . . . . . 10 mA
Power Dissipation at $T_A$ < +25°C (D package) . . . . . 1 W
Package thermal impedance, $\theta_{JA}$ (see Note 1): D (8-pin) package . . . . . 97°C/W
Storage temperature range, $T_{stg}$ . . . . . –65°C to 150°C
Lead temperature soldering 1,6 mm (1/16 inch) from case for 10 seconds . . . . . 260°C

† Stresses beyond those listed under “absolute maximum ratings” may cause permanent damage to the device. These are stress ratings only, and functional operation of the device at these or any other conditions beyond those indicated under “recommended operating conditions” is not implied. Exposure to absolute-maximum-rated conditions for extended periods may affect device reliability.

‡ Unless otherwise indicated, voltages are reference to ground and currents are positive into and negative out of the specified terminals.

NOTE 1: Long term high–temperature storage and/or extended use at maximum recommended operating conditions may result in a reduction of overall device life. See http://www.ti.com/ep_quality for additional information on enhanced plastic packaging.

## electrical characteristics, $T_A$ = –40°C to 125°C, $V_{CC}$ = 15 V (see Note 1), $R_T$ = 10 kΩ, $C_T$ = 3.3 nF, and $T_A$ = $T_J$ (unless otherwise stated)

| PARAMETER | TEST CONDITIONS | | MIN | TYP | MAX | UNITS |
|---|---|---|---|---|---|---|
| **Reference Section** | | | | | | |
| Output voltage | $T_J$ = 25°C, $I_O$ = 1 mA | | 4.95 | 5.0 | 5.05 | V |
| Line regulation voltage | $V_{IN}$ = 12 V to 25 V | | | 6 | 20 | mV |
| Load regulation voltage | $I_O$ = 1 mA to 20 mA | | | 6 | 25 | mV |
| Temperature stability | See Notes 2 and 3 | | | 0.2 | 0.4 | mV/°C |
| Total output variation voltage | Line, Load, Temp. | | 4.9 | | 5.1 | V |
| Output noise voltage | f = 10 Hz to 10 kHz, See Note 2 | $T_J$ = 25°C | | 50 | | µV |
| Long term stability | 1000 hours, See Note 2 | $T_A$ = 125°C | | 5 | 25 | mV |
| Output short-circuit current | | | –30 | –100 | –180 | mA |
| **Oscillator Section** | | | | | | |
| Initial accuracy | See Note 4 | $T_J$ = 25°C | 47 | 52 | 57 | kHz |
| Voltage stability | $V_{CC}$ = 12 V to 25 V | | | 0.2 | 1 | % |
| Temperature stability | $T_A$ = MIN to MAX, See Note 2 | | | 5 | | % |
| Amplitude peak-to-peak | V pin 7, See Note 2 | | | 1.7 | | V |
| Discharge current | V pin 7 = 2 V, See Note 5 | $T_J$ = 25°C | 7.8 | 8.3 | 8.8 | mA |
| | | $T_J$ = Full range | 7.5 | | 8.8 | |

## electrical characteristics, $T_A$ = –40°C to 125°C, $V_{CC}$ = 15 V (see Note 1), $R_T$ = 10 kΩ, $C_T$ = 3.3 nF, and $T_A = T_J$ (unless otherwise stated)

| PARAMETER | TEST CONDITIONS | | MIN | TYP | MAX | UNITS |
|---|---|---|---|---|---|---|
| **Error Amplifier Section** | | | | | | |
| Input voltage | COMP = 2.5 V | | 2.45 | 2.5 | 2.55 | V |
| Input bias current | | | | –0.3 | –1 | µA |
| Open loop voltage gain ($A_{VOL}$) | $V_O$ = 2 V to 4 V | | 65 | 90 | | dB |
| Unity gain bandwidth | See Note 2 | $T_J$ = 25°C | 0.7 | 1 | | MHz |
| PSRR | $V_{CC}$ = 12 V to 25 V | | 60 | 70 | | dB |
| Output sink current | FB = 2.7 V, COMP = 1.1 V | | 2 | 6 | | mA |
| Output source current | FB = 2.3 V, COMP = 5 V | | –0.5 | –0.8 | | mA |
| $V_{OUT}$ high | FB = 2.3 V, $R_L$ = 15 kΩ to GND | | 5 | 6 | | V |
| $V_{OUT}$ low | FB = 2.7 V, $R_L$ = 15 kΩ to $V_{REF}$ | | | 0.7 | 1.1 | V |
| **Current Sense Section** | | | | | | |
| Gain | See Notes 6 and 7 | | 2.85 | 3 | 3.15 | V/V |
| Maximum input signal | COMP = 5 V, See Note 6 | | 0.9 | 1 | 1.1 | V |
| PSRR | $V_{CC}$ = 12 V to 25 V, See Note 6 | | | 70 | | dB |
| Input bias current | | | | –2 | –10 | µA |
| Delay to output | $I_{SENSE}$ = 0 V to 2 V, See Note 2 | | | 150 | 300 | ns |
| **Output Section (OUT)** | | | | | | |
| Low-level output voltage | $I_{OUT}$ = 20 mA | | | 0.1 | 0.4 | V |
| | $I_{OUT}$ = 200 mA | | | 15 | 2.2 | |
| High-level output voltage | $I_{OUT}$ = –20 mA | | 13 | 13.5 | | V |
| | $I_{OUT}$ = –200 mA | | 12 | 13.5 | | |
| Rise time | $C_L$ = 1 nF, See Note 2 | $T_J$ = 25°C | | 50 | 150 | ns |
| Fall time | $C_L$ = 1 nF, See Note 2 | $T_J$ = 25°C | | 50 | 150 | ns |
| UVLO saturation | $V_{CC}$ = 5 V, $I_{OUT}$ = 10 mA | | | 0.7 | 1.2 | V |
| **Undervoltage Lockout Section** | | | | | | |
| Start threshold | | UC2842A, UC2844A | 15 | 16 | 17 | V |
| | | UC2843A, UC2845A | 7.8 | 8.4 | 9 | |
| Minimum operation voltage after turn on | | UC2842A, UC2844A | 9 | 10 | 11 | V |
| | | UC2843A, UC2845A | 7 | 7.6 | 8.2 | |

## electrical characteristics, $T_A$ = –40°C to 125°C, $V_{CC}$ = 15 V (see Note 1), $R_T$ = 10 kΩ, $C_T$ = 3.3 nF, and $T_A = T_J$ (unless otherwise stated)

| PARAMETER | TEST CONDITIONS | | MIN | TYP | MAX | UNITS |
|---|---|---|---|---|---|---|
| **PWM Section** | | | | | | |
| Maximum duty cycle | | UC2842A, UC2843A | 94 | 96 | 100 | % |
| | | UC2844A, UC2845A | 47 | 48 | 50 | |
| Minimum duty cycle | | | | | 0 | % |
| **Total Standby Current** | | | | | | |
| Start-up current | | | | 0.3 | 0.5 | mA |
| Operating supply current | FB = 0 V, SENSE = 0 V | | | 11 | 17 | mA |
| $V_{CC}$ internal zener voltage | $I_{CC}$ = 25 mA | | 30 | 34 | | V |

NOTES:
1. Adjust $V_{CC}$ above the start threshold before setting at 15 V.
2. Not production tested.
3. Temperature stability, sometimes referred to as average temperature coefficient, is described by the equation:
   $$\text{Temp Stability} = \frac{V_{REF}\,(\max) - V_{REF}\,(\min)}{T_J\,(\max) - T_J\,(\min)}.$$ $V_{REF}$ (max) and $V_{REF}$ (min) are the maximum and minimum reference voltage measured over the appropriate temperature range. Note that the extremes in voltage do not necessarily occur at the extremes in temperature.
4. Output frequency equals oscillator frequency for the UC2842A and UC2843A. Output frequency is one half oscillator frequency for the UC2844A and UC2845A.
5. This parameter is measured with $R_T$ = 10 kΩ to $V_{REF}$. This contributes approximately 300 µA of current to the measurement. The total current flowing into the $R_{T/C}$ pin will be approximately 300 µA higher than the measured value.
6. Parameter measured at trip point of latch with $V_{FB}$ at 0 V.
7. Gain is defined by: $A = \frac{\Delta V_{COMP}}{\Delta V_{SENSE}}$; $0 \le V_{SENSE} \le 0.8$ V.

PA

## RAMETER MEASUREMENT INFORMATION

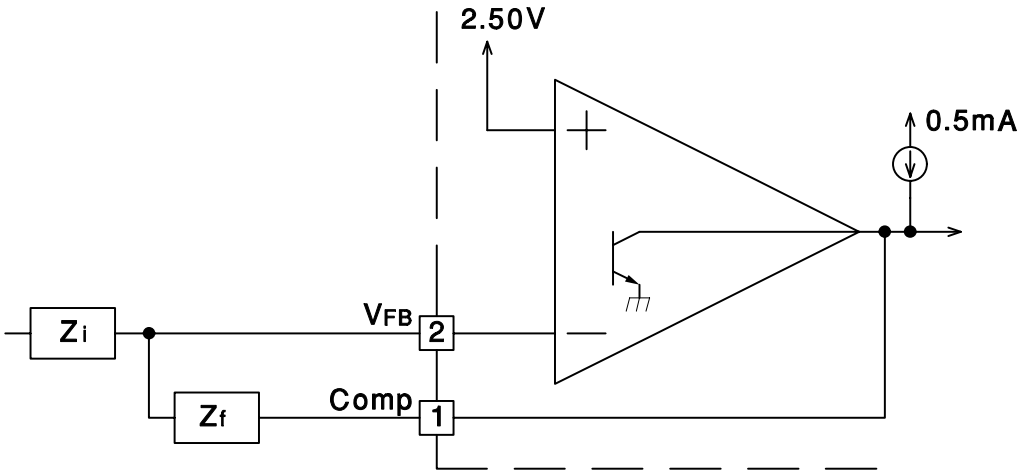


Error Amp can source and sink up to 0.5 mA, and sink up to 2 mA.

**Figure 1. Error Amp Configuration**

## PARAMETER MEASUREMENT INFORMATION

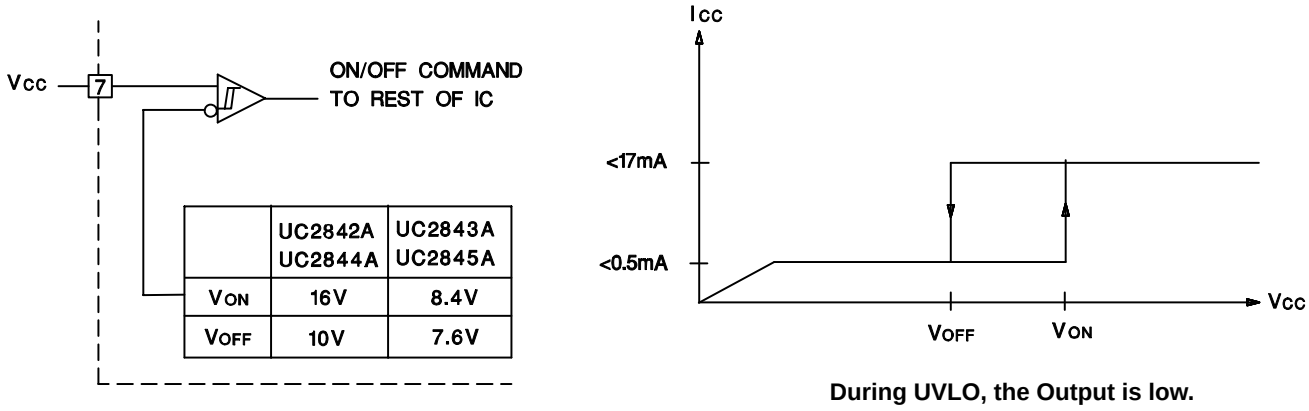


| | UC2842A<br>UC2844A | UC2843A<br>UC2845A |
|---|---|---|
| VON | 16V | 8.4V |
| VOFF | 10V | 7.6V |

**During UVLO, the Output is low.**

**Figure 2. Under Voltage Lockout**

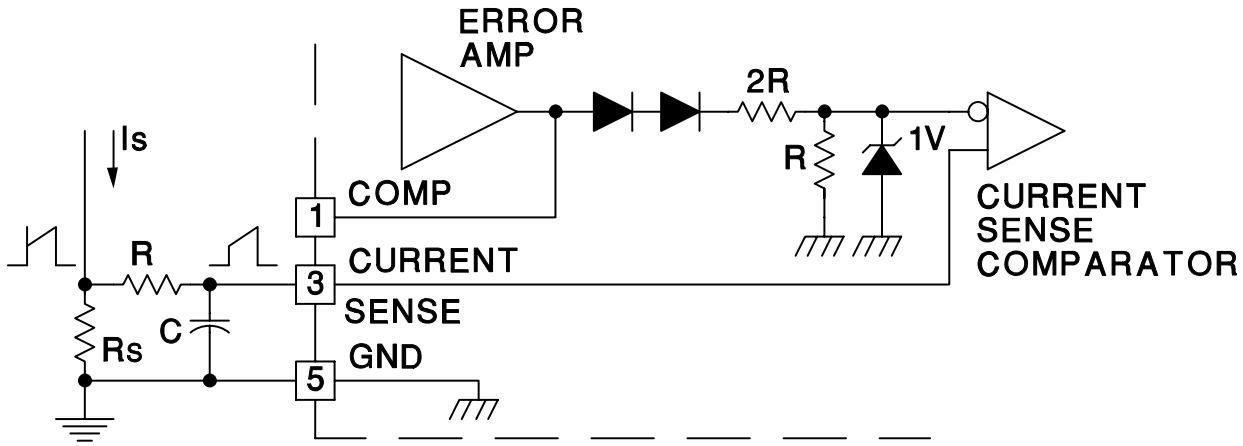


**Peak Current (Is) is Determined By The Formula:**

$$Ismax' \frac{1.0V}{RS}$$

**A small RC filter may be required to supress switch transients.**

**Figure 3. Current Sense Circuit**

## PARAMETER MEASUREMENT INFORMATION

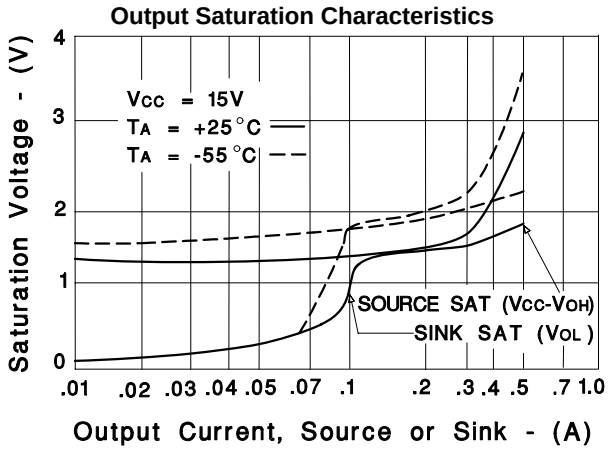


Figure 4

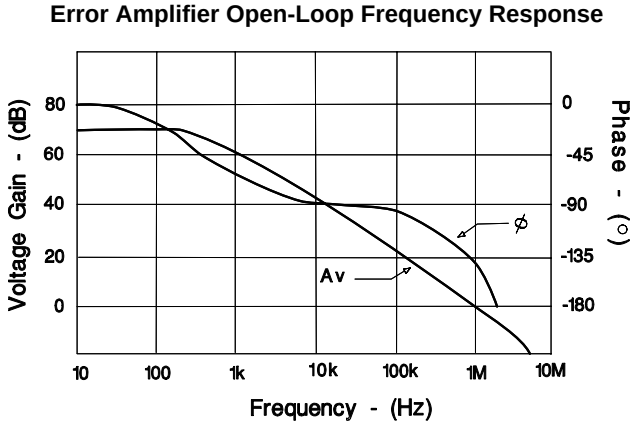


Figure 5

## APPLICATION INFORMATION

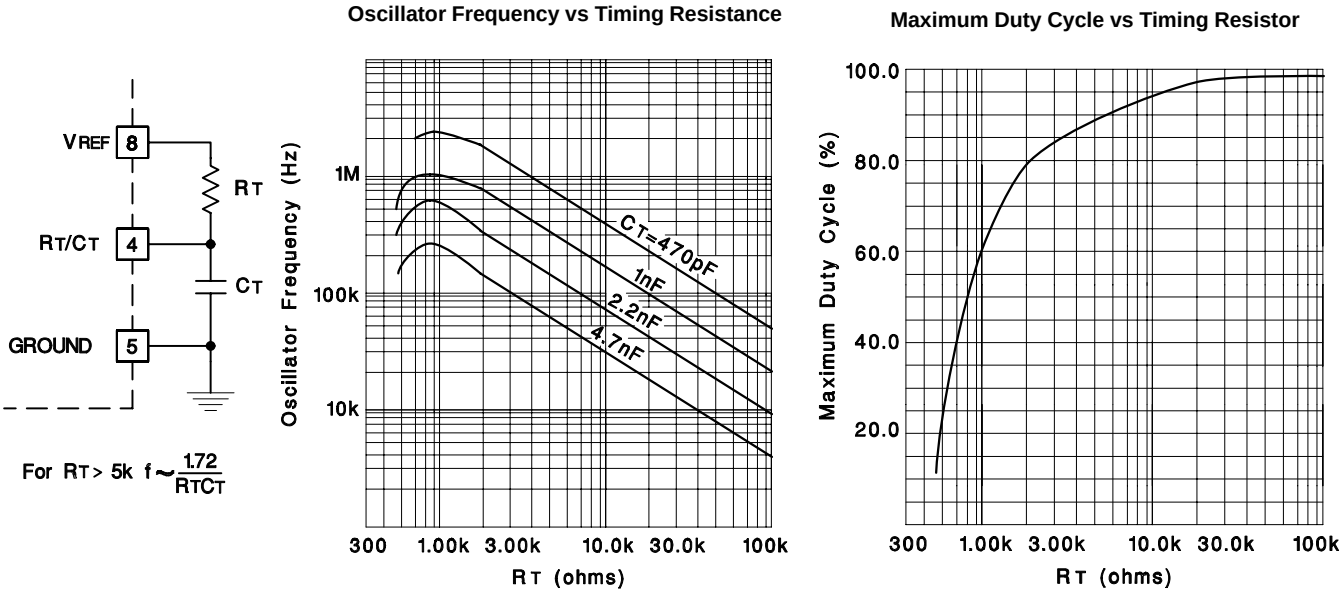


Figure 6. Oscillator

## APPLICATION INFORMATION

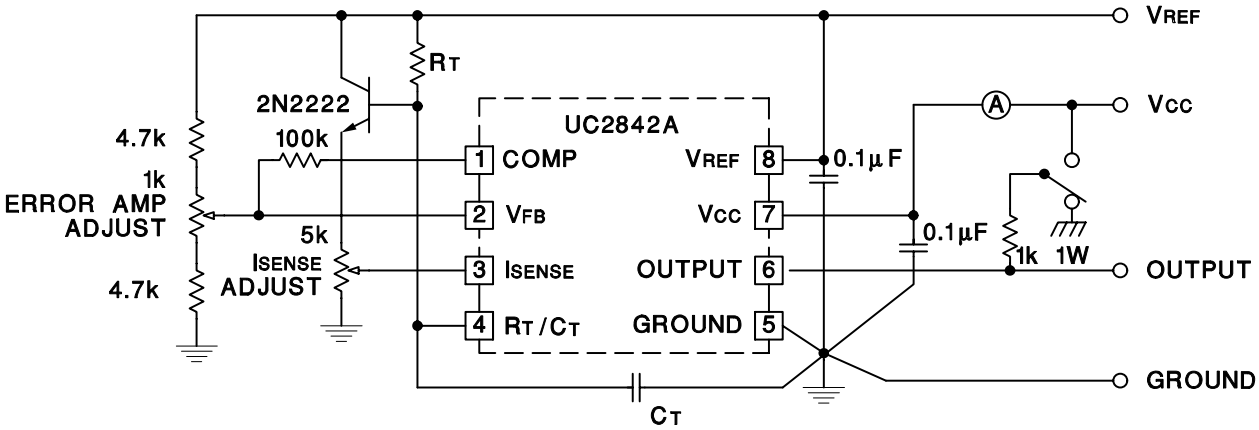


High peak currents associated with capacitive loads necessitate careful grounding techniques. Timing and bypass capacitors should be connected close to pin 5 in a single point ground. The transistor and 5k potentiometer are used to sample the oscillator waveform and apply an adjustable ramp to pin 3.

**Figure 7. Open-Loop Laboratory Text Fixture**

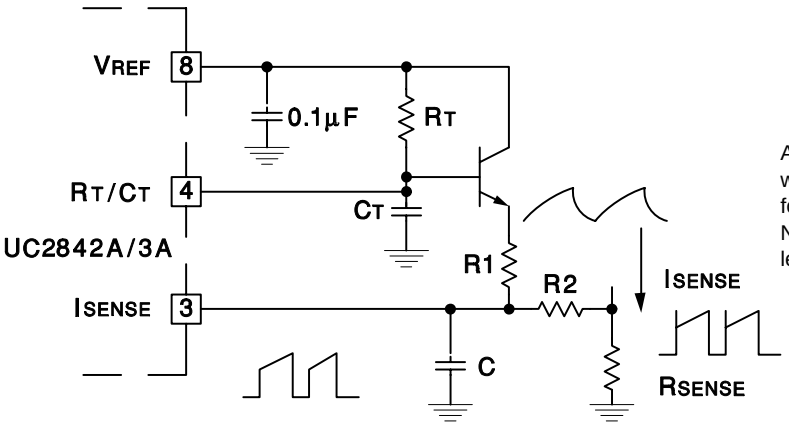


A fraction of the oscillator ramp can be resistively summed with the current sense signal to provide slope compensation for converters requiring duty cycles over 50%.
Note that capacitor, C, forms a filter with R2 to suppress the leading edge switch spikes.

**Figure 8. Slope Complression**

## APPLICATION INFORMATION

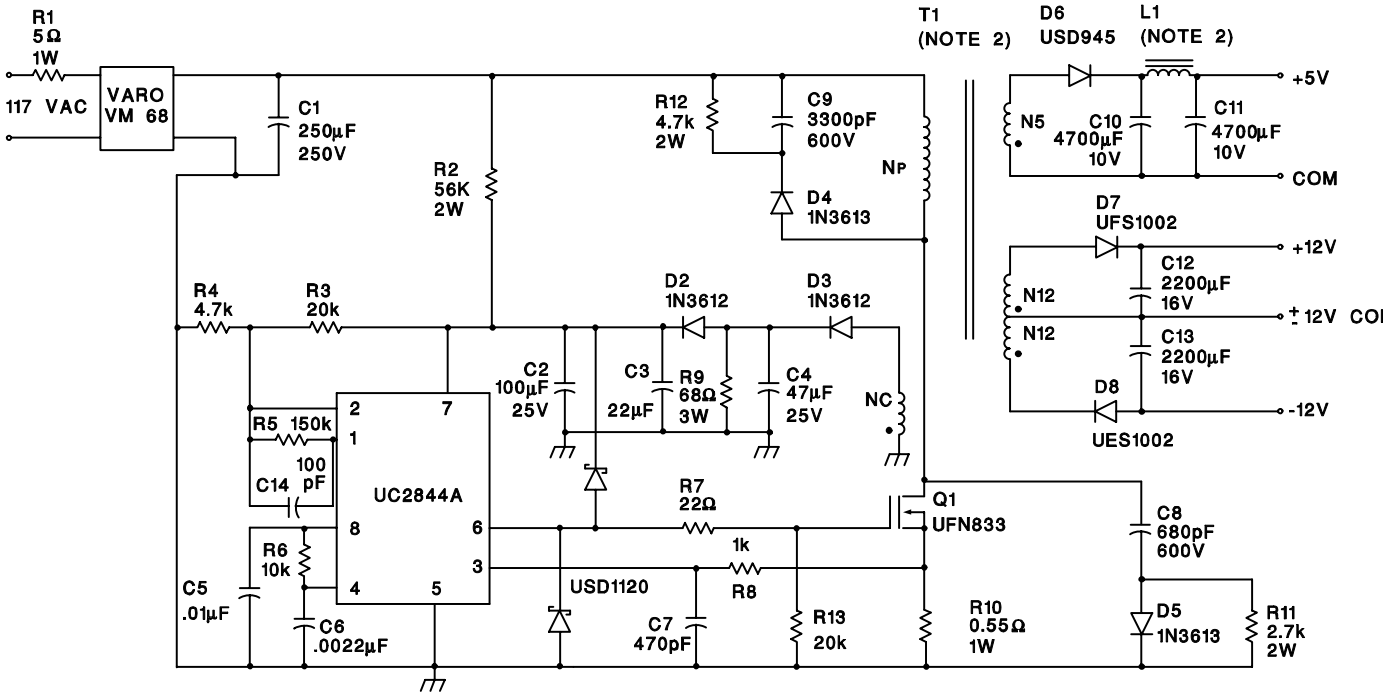


**Power Supply Specifications**

1. Input Voltage 95VAC to 130VAC (50Hz/60Hz)
2. Line Isolation 3750V
3. Switching Frequency 40 kHz
4. Efficiency, Full Load 70%
5. Output Voltage:
   A. +5V, ±5%; 1A to 4A Load
   B. +12V, ±3%; 0.1A to 0.3A Load Ripple voltage: 100 mV P-P Max
   C. –12V, ±3%; 0.1A to 0.3A Load Ripple voltage: 100 mV P-P Max

**Figure 9. Off-Line Flyback Regulator**

## PACKAGING INFORMATION

| Orderable Device | Status (1) | Package Type | Package Drawing | Pins | Package Qty | Eco Plan (2) | Lead finish/ Ball material (6) | MSL Peak Temp (3) | Op Temp (°C) | Device Marking (4/5) | Samples |
|---|---|---|---|---|---|---|---|---|---|---|---|
| UC2842AQD8 | OBSOLETE | SOIC | D | 8 | | TBD | Call TI | Call TI | -40 to 125 | (2842AQ, UC2842AQ) | |
| UC2842AQD8R | ACTIVE | SOIC | D | 8 | 2500 | RoHS & Green | NIPDAU | Level-1-260C-UNLIM | -40 to 125 | (2842AQ, UC2842AQ) | Samples |
| UC2842AQDR | ACTIVE | SOIC | D | 14 | 2500 | RoHS & Green | NIPDAU | Level-1-260C-UNLIM | -40 to 125 | (2842AQ, UC2842AQ) | Samples |
| UC2843AQD8 | ACTIVE | SOIC | D | 8 | 75 | RoHS & Green | NIPDAU | Level-1-260C-UNLIM | -40 to 125 | (2843AQ, UC2843AQ) | Samples |
| UC2843AQD8R | ACTIVE | SOIC | D | 8 | 2500 | RoHS & Green | NIPDAU | Level-1-260C-UNLIM | -40 to 125 | (2843AQ, UC2843AQ) | Samples |
| UC2843AQDR | OBSOLETE | SOIC | D | 14 | | TBD | Call TI | Call TI | -40 to 125 | (2843AQ, UC2843AQ) | |
| UC2845AQD8 | OBSOLETE | SOIC | D | 8 | | TBD | Call TI | Call TI | -40 to 125 | (2845AQ, UC2845AQ) | |
| UC2845AQD8R | ACTIVE | SOIC | D | 8 | 2500 | RoHS & Green | NIPDAU | Level-1-260C-UNLIM | -40 to 125 | (2845AQ, UC2845AQ) | Samples |
| UC2845AQDR | ACTIVE | SOIC | D | 14 | 2500 | RoHS & Green | NIPDAU | Level-1-260C-UNLIM | -40 to 125 | (2845AQ, UC2845AQ) | Samples |

(1) The marketing status values are defined as follows:
**ACTIVE:** Product device recommended for new designs.
**LIFEBUY:** TI has announced that the device will be discontinued, and a lifetime-buy period is in effect.
**NRND:** Not recommended for new designs. Device is in production to support existing customers, but TI does not recommend using this part in a new design.
**PREVIEW:** Device has been announced but is not in production. Samples may or may not be available.
**OBSOLETE:** TI has discontinued the production of the device.

(2) **RoHS:** TI defines "RoHS" to mean semiconductor products that are compliant with the current EU RoHS requirements for all 10 RoHS substances, including the requirement that RoHS substance do not exceed 0.1% by weight in homogeneous materials. Where designed to be soldered at high temperatures, "RoHS" products are suitable for use in specified lead-free processes. TI may reference these types of products as "Pb-Free".
**RoHS Exempt:** TI defines "RoHS Exempt" to mean products that contain lead but are compliant with EU RoHS pursuant to a specific EU RoHS exemption.
**Green:** TI defines "Green" to mean the content of Chlorine (Cl) and Bromine (Br) based flame retardants meet JS709B low halogen requirements of <=1000ppm threshold. Antimony trioxide based flame retardants must also meet the <=1000ppm threshold requirement.

(3) MSL, Peak Temp. - The Moisture Sensitivity Level rating according to the JEDEC industry standard classifications, and peak solder temperature.

(4) There may be additional marking, which relates to the logo, the lot trace code information, or the environmental category on the device.

(5) Multiple Device Markings will be inside parentheses. Only one Device Marking contained in parentheses and separated by a "~" will appear on a device. If a line is indented then it is a continuation of the previous line and the two combined represent the entire Device Marking for that device.

(6) Lead finish/Ball material - Orderable Devices may have multiple material finish options. Finish options are separated by a vertical ruled line. Lead finish/Ball material values may wrap to two lines if the finish value exceeds the maximum column width.

**Important Information and Disclaimer:**The information provided on this page represents TI's knowledge and belief as of the date that it is provided. TI bases its knowledge and belief on information provided by third parties, and makes no representation or warranty as to the accuracy of such information. Efforts are underway to better integrate information from third parties. TI has taken and continues to take reasonable steps to provide representative and accurate information but may not have conducted destructive testing or chemical analysis on incoming materials and chemicals. TI and TI suppliers consider certain information to be proprietary, and thus CAS numbers and other limited information may not be available for release.

In no event shall TI's liability arising out of such information exceed the total purchase price of the TI part(s) at issue in this document sold by TI to Customer on an annual basis.

## TAPE AND REEL INFORMATION

**REEL DIMENSIONS**

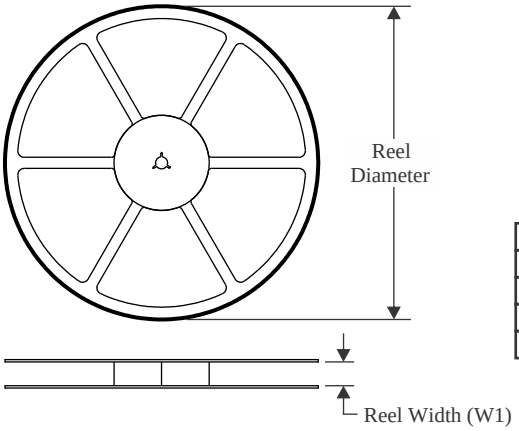


**TAPE DIMENSIONS**

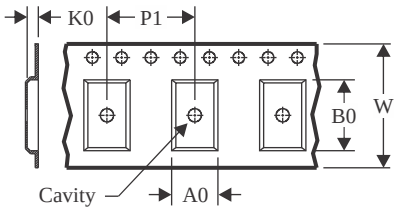


| | |
|---|---|
| A0 | Dimension designed to accommodate the component width |
| B0 | Dimension designed to accommodate the component length |
| K0 | Dimension designed to accommodate the component thickness |
| W | Overall width of the carrier tape |
| P1 | Pitch between successive cavity centers |

**QUADRANT ASSIGNMENTS FOR PIN 1 ORIENTATION IN TAPE**

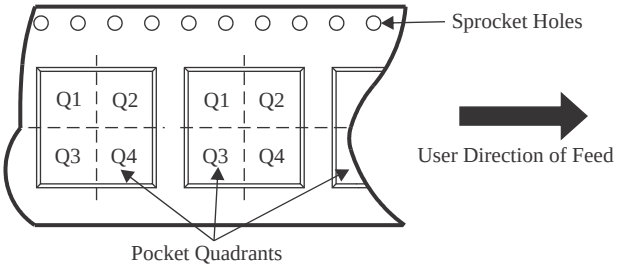


*All dimensions are nominal

| Device | Package Type | Package Drawing | Pins | SPQ | Reel Diameter (mm) | Reel Width W1 (mm) | A0 (mm) | B0 (mm) | K0 (mm) | P1 (mm) | W (mm) | Pin1 Quadrant |
|---|---|---|---|---|---|---|---|---|---|---|---|---|
| UC2842AQD8R | SOIC | D | 8 | 2500 | 330.0 | 12.4 | 6.4 | 5.2 | 2.1 | 8.0 | 12.0 | Q1 |
| UC2842AQDR | SOIC | D | 14 | 2500 | 330.0 | 16.4 | 6.5 | 9.0 | 2.1 | 8.0 | 16.0 | Q1 |
| UC2843AQD8R | SOIC | D | 8 | 2500 | 330.0 | 12.4 | 6.4 | 5.2 | 2.1 | 8.0 | 12.0 | Q1 |
| UC2845AQD8R | SOIC | D | 8 | 2500 | 330.0 | 12.4 | 6.4 | 5.2 | 2.1 | 8.0 | 12.0 | Q1 |
| UC2845AQDR | SOIC | D | 14 | 2500 | 330.0 | 16.4 | 6.5 | 9.0 | 2.1 | 8.0 | 16.0 | Q1 |

TAPE AND REEL BOX DIMENSIONS

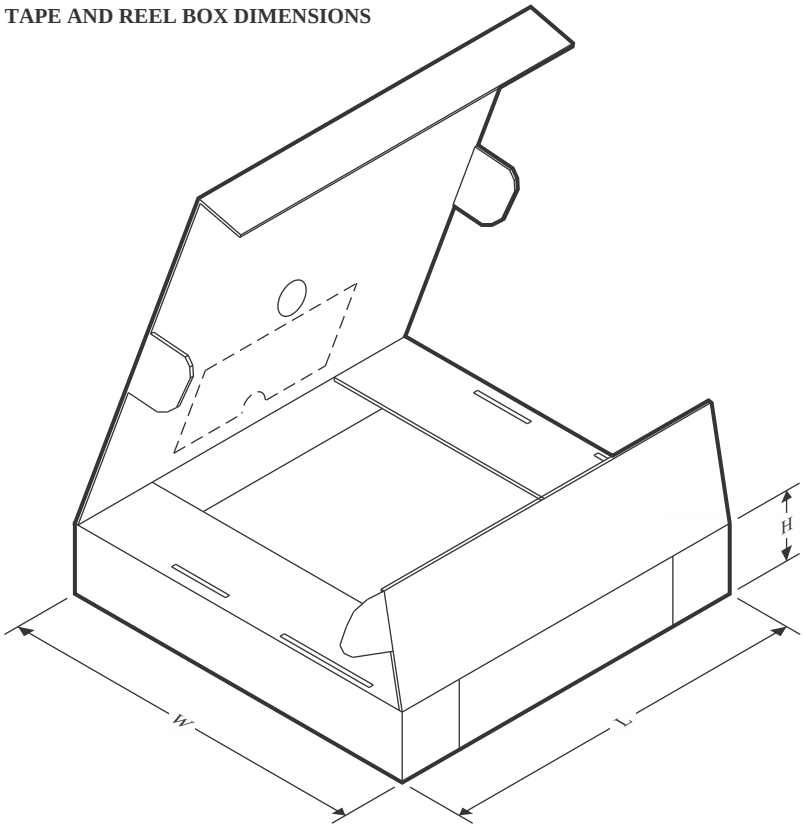


*All dimensions are nominal

| Device | Package Type | Package Drawing | Pins | SPQ | Length (mm) | Width (mm) | Height (mm) |
|---|---|---|---|---|---|---|---|
| UC2842AQD8R | SOIC | D | 8 | 2500 | 356.0 | 356.0 | 35.0 |
| UC2842AQDR | SOIC | D | 14 | 2500 | 356.0 | 356.0 | 35.0 |
| UC2843AQD8R | SOIC | D | 8 | 2500 | 356.0 | 356.0 | 35.0 |
| UC2845AQD8R | SOIC | D | 8 | 2500 | 356.0 | 356.0 | 35.0 |
| UC2845AQDR | SOIC | D | 14 | 2500 | 356.0 | 356.0 | 35.0 |

## TUBE

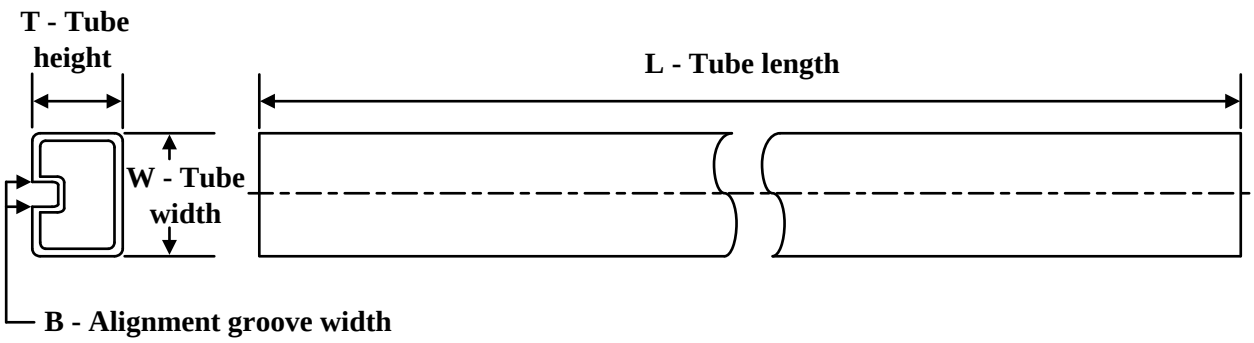


*All dimensions are nominal

| Device | Package Name | Package Type | Pins | SPQ | L (mm) | W (mm) | T (µm) | B (mm) |
|---|---|---|---|---|---|---|---|---|
| UC2843AQD8 | D | SOIC | 8 | 75 | 506.6 | 8 | 3940 | 4.32 |

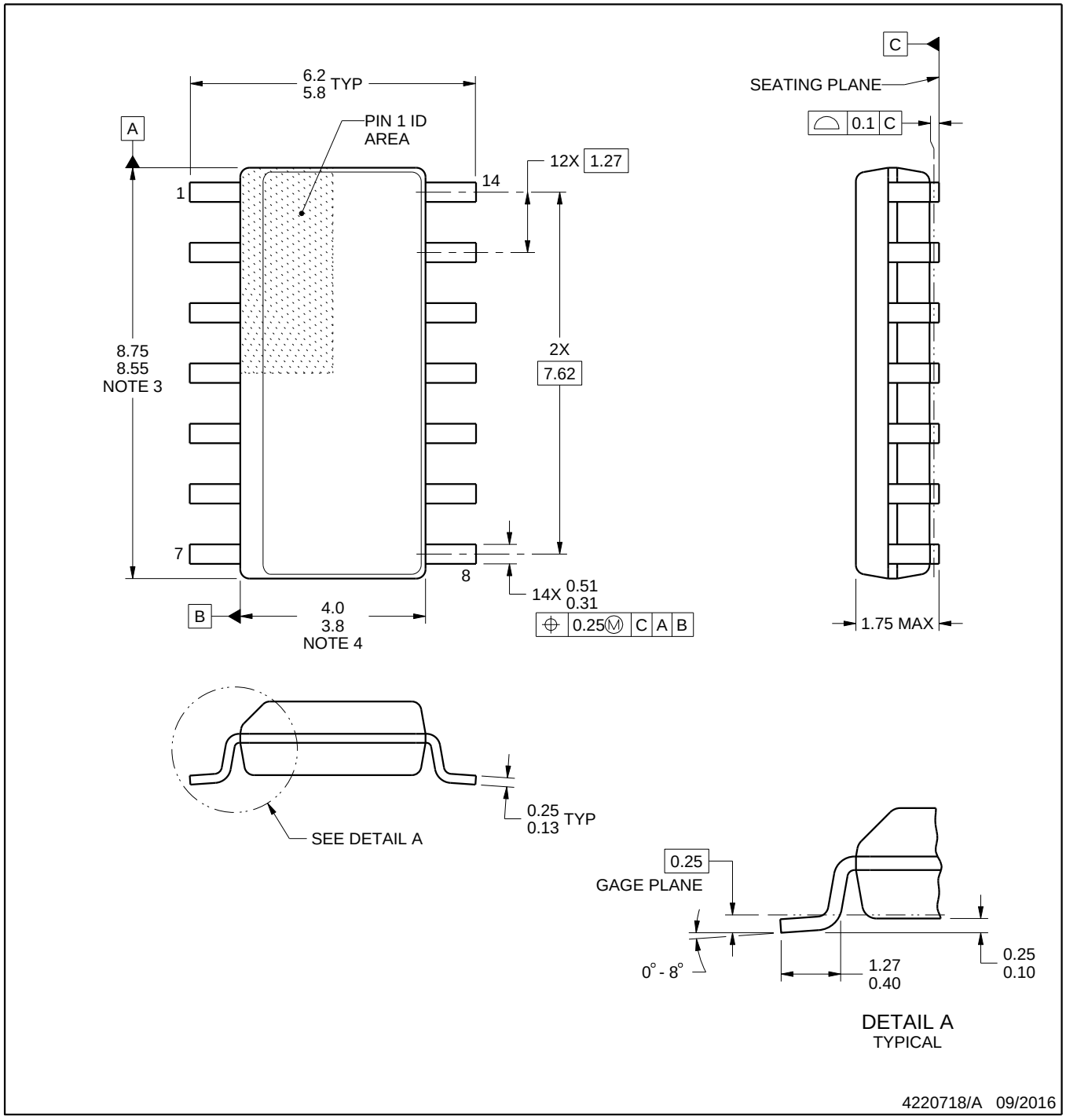


NOTES:

1. All linear dimensions are in millimeters. Dimensions in parenthesis are for reference only. Dimensioning and tolerancing per ASME Y14.5M.
2. This drawing is subject to change without notice.
3. This dimension does not include mold flash, protrusions, or gate burrs. Mold flash, protrusions, or gate burrs shall not exceed 0.15 mm, per side.
4. This dimension does not include interlead flash. Interlead flash shall not exceed 0.43 mm, per side.
5. Reference JEDEC registration MS-012, variation AB.

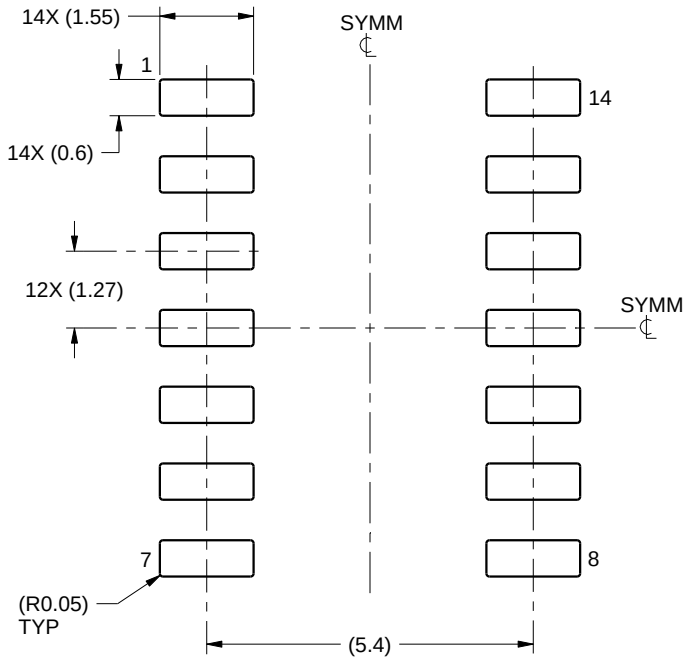


LAND PATTERN EXAMPLE
SCALE:8X

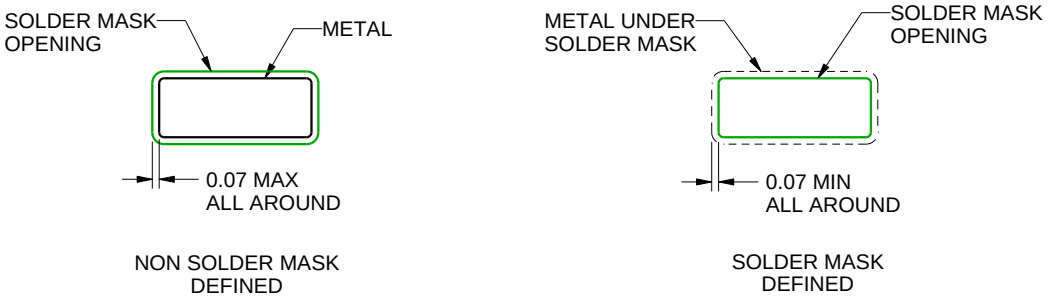


SOLDER MASK DETAILS

4220718/A 09/2016

NOTES: (continued)

6. Publication IPC-7351 may have alternate designs.
7. Solder mask tolerances between and around signal pads can vary based on board fabrication site.

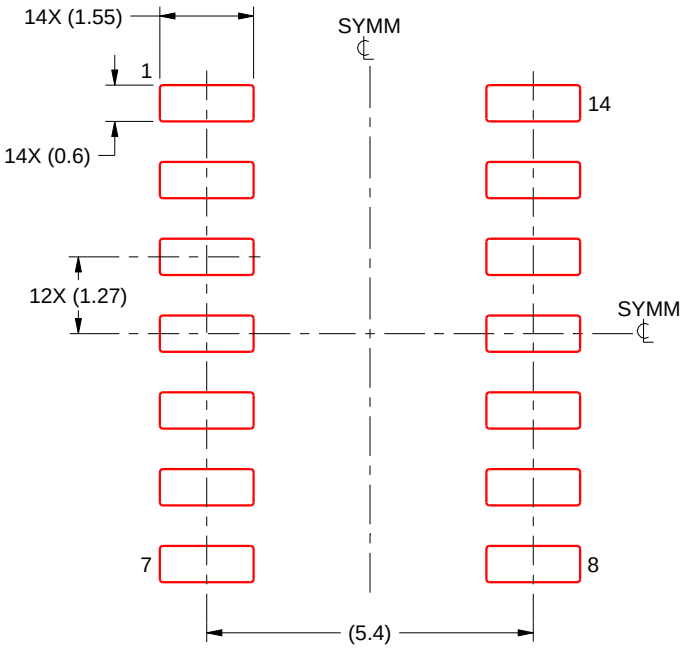


SOLDER PASTE EXAMPLE
BASED ON 0.125 mm THICK STENCIL
SCALE:8X

4220718/A 09/2016

NOTES: (continued)

8. Laser cutting apertures with trapezoidal walls and rounded corners may offer better paste release. IPC-7525 may have alternate design recommendations.
9. Board assembly site may have different recommendations for stencil design.

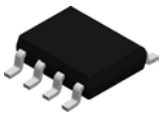

# PACKAGE OUTLINE

## D0008A

## SOIC - 1.75 mm max height

SMALL OUTLINE INTEGRATED CIRCUIT

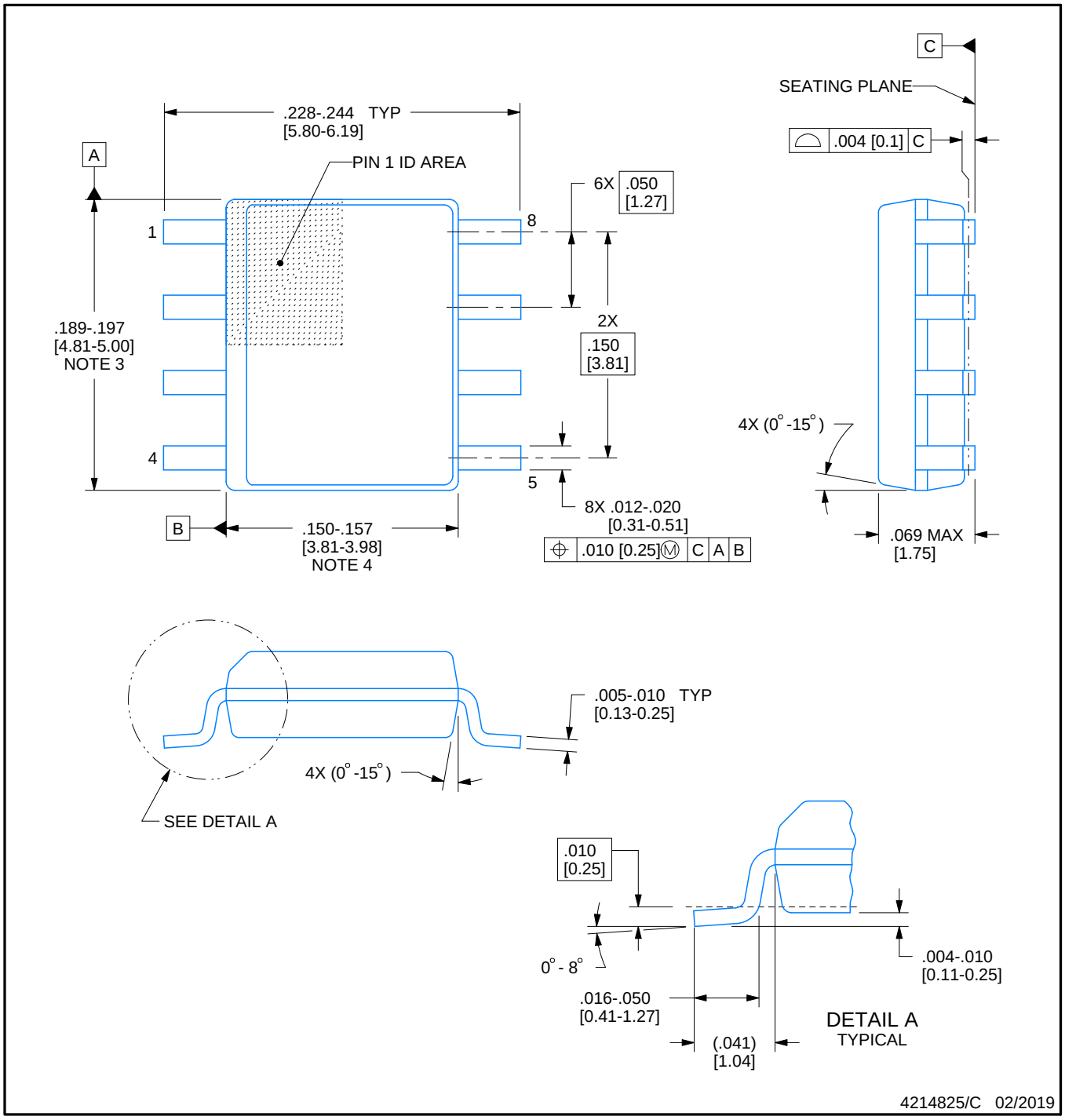


NOTES:

1. Linear dimensions are in inches [millimeters]. Dimensions in parenthesis are for reference only. Controlling dimensions are in inches. Dimensioning and tolerancing per ASME Y14.5M.
2. This drawing is subject to change without notice.
3. This dimension does not include mold flash, protrusions, or gate burrs. Mold flash, protrusions, or gate burrs shall not exceed .006 [0.15] per side.
4. This dimension does not include interlead flash.
5. Reference JEDEC registration MS-012, variation AA.

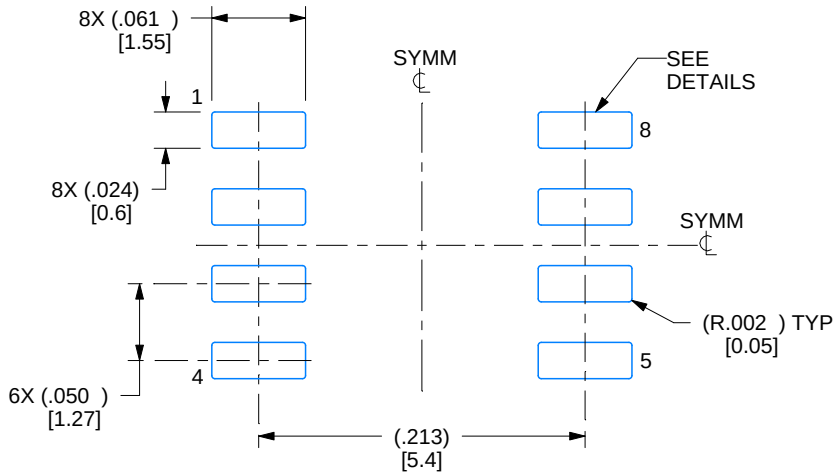


LAND PATTERN EXAMPLE
EXPOSED METAL SHOWN
SCALE:8X

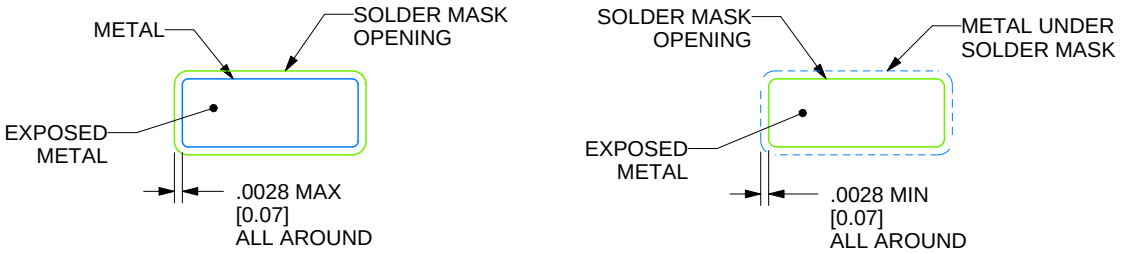


SOLDER MASK DETAILS

4214825/C 02/2019

NOTES: (continued)

6. Publication IPC-7351 may have alternate designs.
7. Solder mask tolerances between and around signal pads can vary based on board fabrication site.

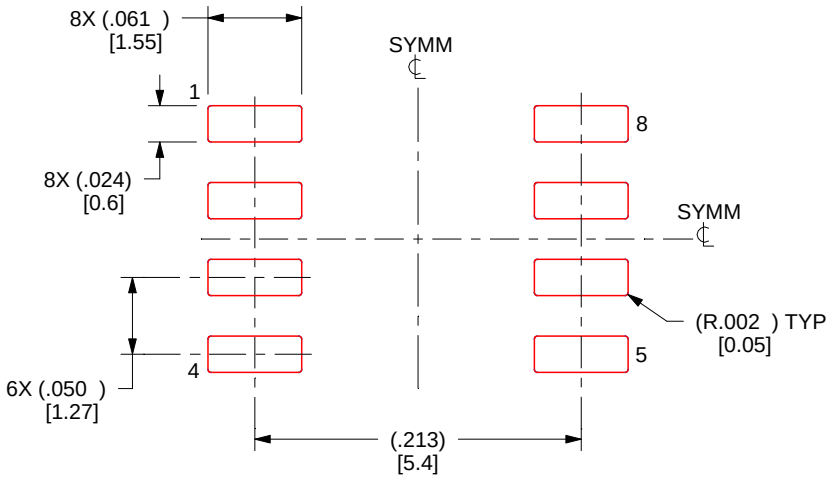


SOLDER PASTE EXAMPLE
BASED ON .005 INCH [0.125 MM] THICK STENCIL
SCALE:8X

4214825/C 02/2019

NOTES: (continued)

8. Laser cutting apertures with trapezoidal walls and rounded corners may offer better paste release. IPC-7525 may have alternate design recommendations.
9. Board assembly site may have different recommendations for stencil design.

# IMPORTANT NOTICE AND DISCLAIMER

TI PROVIDES TECHNICAL AND RELIABILITY DATA (INCLUDING DATA SHEETS), DESIGN RESOURCES (INCLUDING REFERENCE DESIGNS), APPLICATION OR OTHER DESIGN ADVICE, WEB TOOLS, SAFETY INFORMATION, AND OTHER RESOURCES “AS IS” AND WITH ALL FAULTS, AND DISCLAIMS ALL WARRANTIES, EXPRESS AND IMPLIED, INCLUDING WITHOUT LIMITATION ANY IMPLIED WARRANTIES OF MERCHANTABILITY, FITNESS FOR A PARTICULAR PURPOSE OR NON-INFRINGEMENT OF THIRD PARTY INTELLECTUAL PROPERTY RIGHTS.

These resources are intended for skilled developers designing with TI products. You are solely responsible for (1) selecting the appropriate TI products for your application, (2) designing, validating and testing your application, and (3) ensuring your application meets applicable standards, and any other safety, security, regulatory or other requirements.

These resources are subject to change without notice. TI grants you permission to use these resources only for development of an application that uses the TI products described in the resource. Other reproduction and display of these resources is prohibited. No license is granted to any other TI intellectual property right or to any third party intellectual property right. TI disclaims responsibility for, and you will fully indemnify TI and its representatives against, any claims, damages, costs, losses, and liabilities arising out of your use of these resources.

TI’s products are provided subject to TI’s Terms of Sale or other applicable terms available either on ti.com or provided in conjunction with such TI products. TI’s provision of these resources does not expand or otherwise alter TI’s applicable warranties or warranty disclaimers for TI products.

TI objects to and rejects any additional or different terms you may have proposed.

Mailing Address: Texas Instruments, Post Office Box 655303, Dallas, Texas 75265
Copyright © 2024, Texas Instruments Incorporated