TEXAS INSTRUMENTS
Data sheet acquired from Harris Semiconductor
SCHS022D – Revised September 2003

# CD4011UB Types

## CMOS Quad 2-Input NAND Gate

High-Voltage Types (20-Volt Rating)

■ CD4011UB quad 2-input NAND gate provides the system designer with direct implementation of the NAND function and supplements the existing family of CMOS gates.

The CD4011UB types are supplied in 14-lead hermetic dual-in-line ceramic packages (F3A suffix), 14-lead dual-in-line plastic packages (E suffix), 14-lead small-outline packages (M, MT, M96, and NSR suffixes), and 14-lead thin shrink small-outline packages (PW and PWR suffixes).

*Features:*

- Propagation delay time = 30 ns (typ). at $C_L$ = 50 pF, $V_{DD}$ = 10 V
- Standardized symmetrical output characteristics
- 100% tested for quiescent current at 20 V
- Maximum input current of 1 μA at 18 V over full package temperature range; 100 nA at 18 V and 25°C
- 5-V, 10-V, and 15-V parametric ratings
- Meets all requirements of JEDEC Tentative **Standard No. 13B, "Standard Specifications** for Description of 'B' Series CMOS Devices"

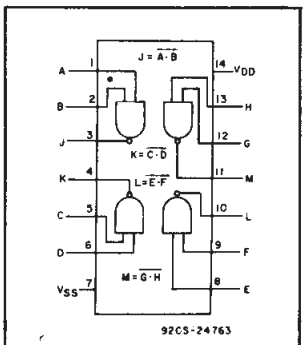


CD4011UB
FUNCTIONAL DIAGRAM

**MAXIMUM RATINGS,** *Absolute-Maximum Values:*

DC SUPPLY-VOLTAGE RANGE, ($V_{DD}$)
Voltages referenced to $V_{SS}$ Terminal) ..... -0.5V to +20V
INPUT VOLTAGE RANGE, ALL INPUTS ..... -0.5V to $V_{DD}$ +0.5V
DC INPUT CURRENT, ANY ONE INPUT ..... ±10mA
POWER DISSIPATION PER PACKAGE ($P_D$):
For $T_A$ = -55°C to +100°C ..... 500mW
For $T_A$ = +100°C to +125°C ..... Derate Linearity at 12mW/°C to 200mW
DEVICE DISSIPATION PER OUTPUT TRANSISTOR
FOR $T_A$ = FULL PACKAGE-TEMPERATURE RANGE (All Package Types) ..... 100mW
OPERATING-TEMPERATURE RANGE ($T_A$) ..... -55°C to +125°C
STORAGE TEMPERATURE RANGE ($T_{stg}$) ..... -65°C to +150°C
LEAD TEMPERATURE (DURING SOLDERING):
At distance 1/16 ± 1/32 inch (1.59 ± 0.79mm) from case for 10s max ..... +265°C

TERMINAL ASSIGNMENT

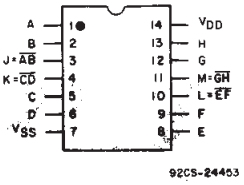


TOP VIEW
CD4011UB

**RECOMMENDED OPERATING CONDITIONS**

**For maximum reliability, nominal operating conditions should be selected so that operation is always within the following ranges.**

| CHARACTERISTIC | MIN. | MAX. | UNITS |
|---|---|---|---|
| Supply Voltage Range (For $T_A$ = Full Package Temperature Range) | 3 | 18 | V |

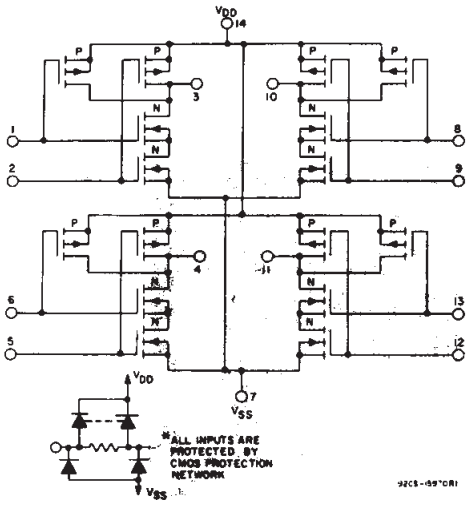


*Fig. 1 – Schematic diagram for type CD4011UB.*

Copyright © 2003, Texas Instruments Incorporated

## STATIC ELECTRICAL CHARACTERISTICS

| CHARACTERISTIC | CONDITIONS | | | LIMITS AT INDICATED TEMPERATURES (°C) | | | | | | | UNITS |
|---|---|---|---|---|---|---|---|---|---|---|---|
| | $V_O$ (V) | $V_{IN}$ (V) | $V_{DD}$ (V) | −55 | −40 | +85 | +125 | +25 Min. | +25 Typ. | +25 Max. | |
| Quiescent Device Current, $I_{DD}$ Max. | – | 0,5 | 5 | 0.25 | 0.25 | 7.5 | 7.5 | – | 0.01 | 0.25 | μA |
| | – | 0,10 | 10 | 0.5 | 0.5 | 15 | 15 | – | 0.01 | 0.5 | |
| | – | 0,15 | 15 | 1 | 1 | 30 | 30 | – | 0.01 | 1 | |
| | – | 0,20 | 20 | 5 | 5 | 150 | 150 | – | 0.02 | 5 | |
| Output Low (Sink) Current $I_{OL}$ Min. | 0.4 | 0,5 | 5 | 0.64 | 0.61 | 0.42 | 0.36 | 0.51 | 1 | – | mA |
| | 0.5 | 0,10 | 10 | 1.6 | 1.5 | 1.1 | 0.9 | 1.3 | 2.6 | – | |
| | 1.5 | 0,15 | 15 | 4.2 | 4 | 2.8 | 2.4 | 3.4 | 6.8 | – | |
| Output High (Source) Current, $I_{OH}$ Min. | 4.6 | 0,5 | 5 | −0.64 | −0.61 | −0.42 | −0.36 | −0.51 | −1 | – | |
| | 2.5 | 0,5 | 5 | −2 | −1.8 | −1.3 | −1.15 | −1.6 | −3.2 | – | |
| | 9.5 | 0,10 | 10 | −1.6 | −1.5 | −1.1 | −0.9 | −1.3 | −2.6 | – | |
| | 13.5 | 0,15 | 15 | −4.2 | −4 | −2.8 | −2.4 | −3.4 | −6.8 | – | |
| Output Voltage: Low-Level, $V_{OL}$ Max. | – | 0,5 | 5 | 0.05 | | | | – | 0 | 0.05 | V |
| | – | 0,10 | 10 | 0.05 | | | | – | 0 | 0.05 | |
| | – | 0,15 | 15 | 0.05 | | | | – | 0 | 0.05 | |
| Output Voltage: High-Level, $V_{OH}$ Min. | – | 0,5 | 5 | 4.95 | | | | 4.95 | 5 | – | |
| | – | 0,10 | 10 | 9.95 | | | | 9.95 | 10 | – | |
| | – | 0,15 | 15 | 14.95 | | | | 14.95 | 15 | – | |
| Input Low Voltage, $V_{IL}$ Max. | 4.5 | – | 5 | 1 | | | | – | – | 1 | V |
| | 9 | – | 10 | 2 | | | | – | – | 2 | |
| | 13.5 | – | 15 | 2.5 | | | | – | – | 2.5 | |
| Input High Voltage, $V_{IH}$ Min. | 0.5,4.5 | – | 5 | 4 | | | | 4 | – | – | |
| | 1,9 | – | 10 | 8 | | | | 8 | – | – | |
| | 1.5,13.5 | – | 15 | 12.5 | | | | 12.5 | – | – | |
| Input Current $I_{IN}$ Max. | | 0,18 | 18 | ±0.1 | ±0.1 | ±1 | ±1 | – | $\pm 10^{-5}$ | ±0.1 | μA |

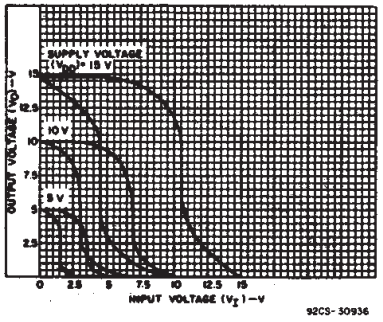


*Fig. 2 – Minimum and maximum voltage transfer characteristics.*

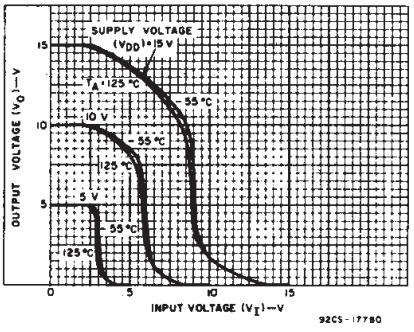


*Fig. 3 – Typical voltage transfer characteristics as a function of temperature.*

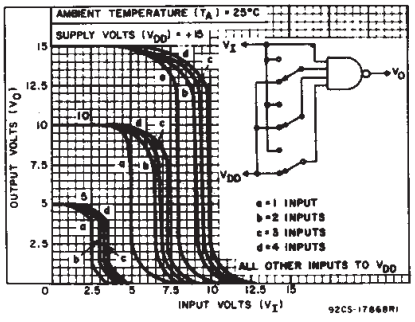


*Fig. 4 – Typical multiple input switching transfer characteristics for CD4012UB.*

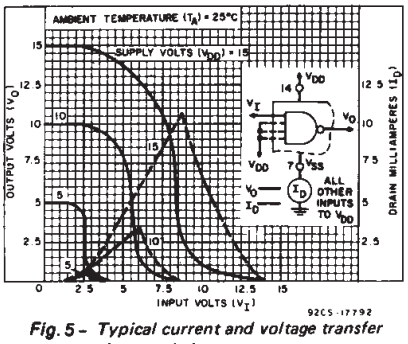


*Fig. 5 – Typical current and voltage transfer characteristics.*

## DYNAMIC ELECTRICAL CHARACTERISTICS

*At $T_A$ = 25°C, Input $t_r$, $t_f$ = 20 ns, and $C_L$ = 50 pF, $R_L$ = 200kΩ*

| CHARACTERISTIC | TEST CONDITIONS | | LIMITS | | UNITS |
|---|---|---|---|---|---|
| | | $V_{DD}$ VOLTS | TYP. | MAX | |
| Propagation Delay Time, $t_{PHL}$, $t_{PLH}$ | | 5 | 60 | 120 | ns |
| | | 10 | 30 | 60 | |
| | | 15 | 25 | 50 | |
| Transition Time, $t_{THL}$, $t_{TLH}$ | | 5 | 100 | 200 | ns |
| | | 10 | 50 | 100 | |
| | | 15 | 40 | 80 | |
| Input Capacitance, $C_{IN}$ | Any Input | | 10 | 15 | pF |

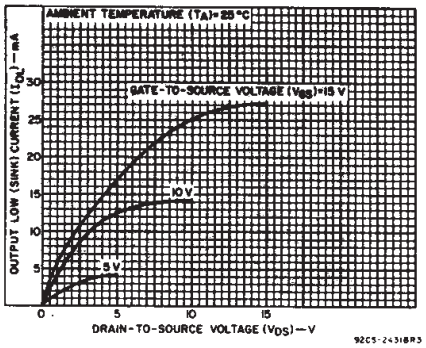


*Fig. 6 – Typical output low (sink) current characteristics.*

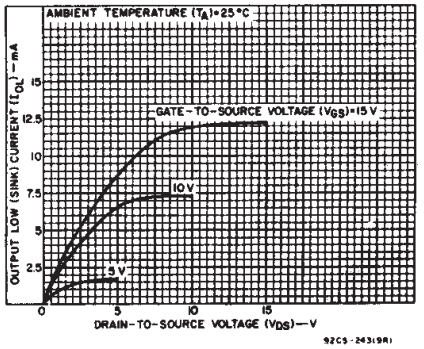


*Fig. 7 – Minimum output low (sink) current characteristics.*

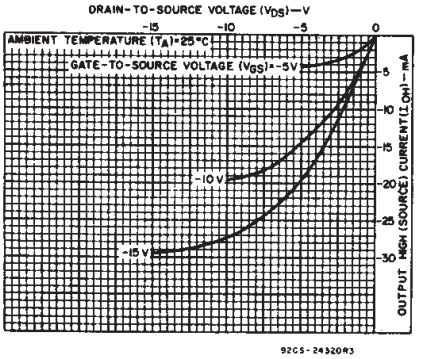


*Fig. 8 – Typical output high (source) current characteristics.*

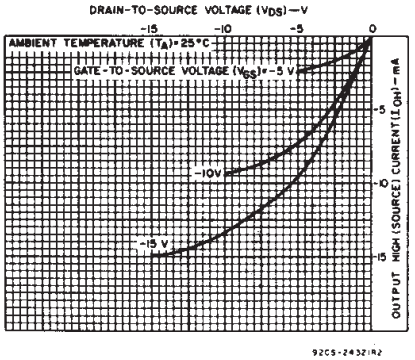


*Fig. 9 – Minimum output high (source) current characteristics.*

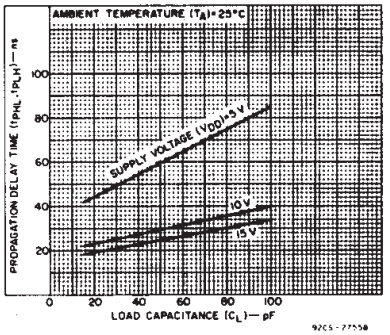


*Fig. 10 – Typical propagation delay time vs. load capacitance.*

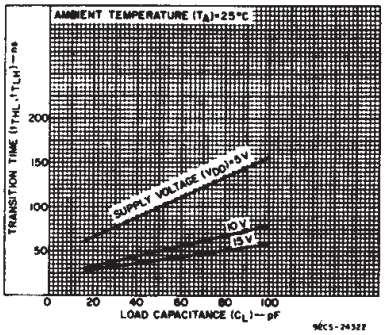


*Fig. 11 – Typical transition time vs. load capacitance.*

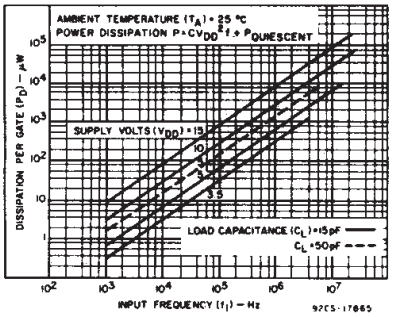


*Fig. 12 – Typical power dissipation vs. frequency characteristics.*

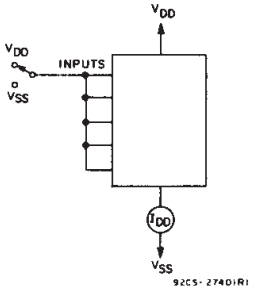


*Fig. 13 – Quiescent device current test circuit.*

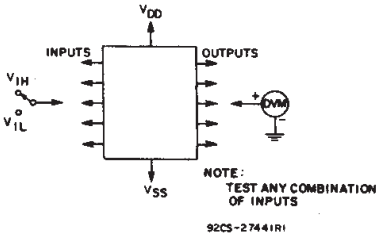


*Fig. 14 – Input voltage test circuit.*

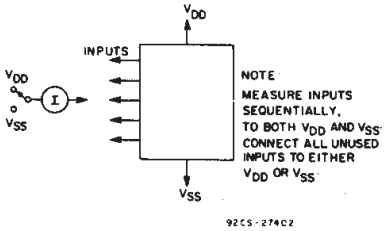


*Fig. 15 – Input current test circuit.*

**Chip Dimensions and Pad Layout**

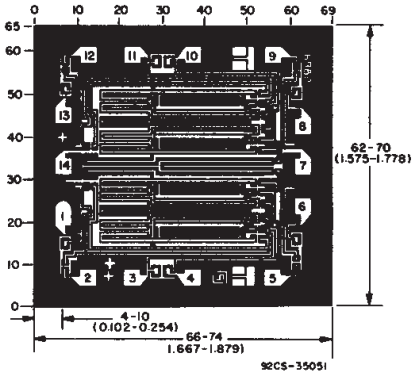


**CD4011UBH**

*Dimensions in parentheses are in millimeters and are derived from the basic inch dimensions as indicated. Grid graduations are in mils ($10^{-3}$ inch).*

## PACKAGING INFORMATION

| Orderable part number | Status (1) | Material type (2) | Package \| Pins | Package qty \| Carrier | RoHS (3) | Lead finish/ Ball material (4) | MSL rating/ Peak reflow (5) | Op temp (°C) | Part marking (6) |
|---|---|---|---|---|---|---|---|---|---|
| CD4011UBE | Active | Production | PDIP (N) \| 14 | 25 \| TUBE | Yes | NIPDAU | N/A for Pkg Type | -55 to 125 | CD4011UBE |
| CD4011UBE.A | Active | Production | PDIP (N) \| 14 | 25 \| TUBE | Yes | NIPDAU | N/A for Pkg Type | -55 to 125 | CD4011UBE |
| CD4011UBEE4 | Active | Production | PDIP (N) \| 14 | 25 \| TUBE | Yes | NIPDAU | N/A for Pkg Type | -55 to 125 | CD4011UBE |
| CD4011UBF | Active | Production | CDIP (J) \| 14 | 25 \| TUBE | No | SNPB | N/A for Pkg Type | -55 to 125 | CD4011UBF |
| CD4011UBF.A | Active | Production | CDIP (J) \| 14 | 25 \| TUBE | No | SNPB | N/A for Pkg Type | -55 to 125 | CD4011UBF |
| CD4011UBM | Obsolete | Production | SOIC (D) \| 14 | - | - | Call TI | Call TI | -55 to 125 | CD4011UBM |
| CD4011UBM96 | Active | Production | SOIC (D) \| 14 | 2500 \| LARGE T&R | Yes | NIPDAU | Level-1-260C-UNLIM | -55 to 125 | CD4011UBM |
| CD4011UBM96.A | Active | Production | SOIC (D) \| 14 | 2500 \| LARGE T&R | Yes | NIPDAU | Level-1-260C-UNLIM | -55 to 125 | CD4011UBM |
| CD4011UBMT | Obsolete | Production | SOIC (D) \| 14 | - | - | Call TI | Call TI | -55 to 125 | CD4011UBM |
| CD4011UBNSR | Active | Production | SOP (NS) \| 14 | 2000 \| LARGE T&R | Yes | NIPDAU | Level-1-260C-UNLIM | -55 to 125 | CD4011UB |
| CD4011UBNSR.A | Active | Production | SOP (NS) \| 14 | 2000 \| LARGE T&R | Yes | NIPDAU | Level-1-260C-UNLIM | -55 to 125 | CD4011UB |
| CD4011UBPWR | Active | Production | TSSOP (PW) \| 14 | 2000 \| LARGE T&R | Yes | NIPDAU | Level-1-260C-UNLIM | -55 to 125 | CM011UB |
| CD4011UBPWR.A | Active | Production | TSSOP (PW) \| 14 | 2000 \| LARGE T&R | Yes | NIPDAU | Level-1-260C-UNLIM | -55 to 125 | CM011UB |

(1) **Status:** For more details on status, see our product life cycle.

(2) **Material type:** When designated, preproduction parts are prototypes/experimental devices, and are not yet approved or released for full production. Testing and final process, including without limitation quality assurance, reliability performance testing, and/or process qualification, may not yet be complete, and this item is subject to further changes or possible discontinuation. If available for ordering, purchases will be subject to an additional waiver at checkout, and are intended for early internal evaluation purposes only. These items are sold without warranties of any kind.

(3) **RoHS values:** Yes, No, RoHS Exempt. See the TI RoHS Statement for additional information and value definition.

(4) **Lead finish/Ball material:** Parts may have multiple material finish options. Finish options are separated by a vertical ruled line. Lead finish/Ball material values may wrap to two lines if the finish value exceeds the maximum column width.

(5) **MSL rating/Peak reflow:** The moisture sensitivity level ratings and peak solder (reflow) temperatures. In the event that a part has multiple moisture sensitivity ratings, only the lowest level per JEDEC standards is shown. Refer to the shipping label for the actual reflow temperature that will be used to mount the part to the printed circuit board.

(6) **Part marking:** There may be an additional marking, which relates to the logo, the lot trace code information, or the environmental category of the part.

Multiple part markings will be inside parentheses. Only one part marking contained in parentheses and separated by a "~" will appear on a part. If a line is indented then it is a continuation of the previous line and the two combined represent the entire part marking for that device.

**Important Information and Disclaimer:**The information provided on this page represents TI's knowledge and belief as of the date that it is provided. TI bases its knowledge and belief on information provided by third parties, and makes no representation or warranty as to the accuracy of such information. Efforts are underway to better integrate information from third parties. TI has taken and continues to take reasonable steps to provide representative and accurate information but may not have conducted destructive testing or chemical analysis on incoming materials and chemicals. TI and TI suppliers consider certain information to be proprietary, and thus CAS numbers and other limited information may not be available for release.

In no event shall TI's liability arising out of such information exceed the total purchase price of the TI part(s) at issue in this document sold by TI to Customer on an annual basis.

**OTHER QUALIFIED VERSIONS OF CD4011UB, CD4011UB-MIL :**

- Catalog : CD4011UB
- Military : CD4011UB-MIL

NOTE: Qualified Version Definitions:

- Catalog - TI's standard catalog product
- Military - QML certified for Military and Defense Applications

## TAPE AND REEL INFORMATION

**REEL DIMENSIONS**

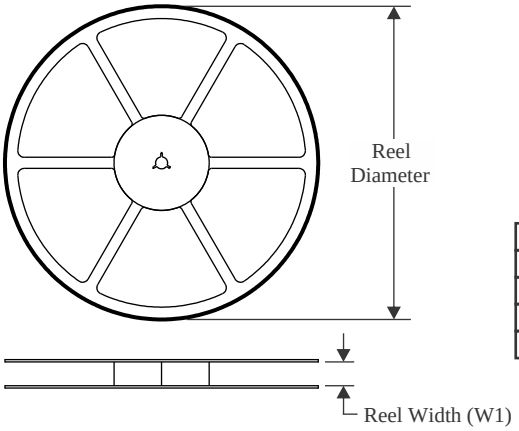


**TAPE DIMENSIONS**

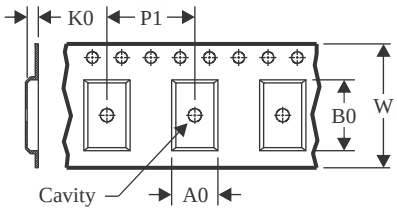


| | |
|---|---|
| A0 | Dimension designed to accommodate the component width |
| B0 | Dimension designed to accommodate the component length |
| K0 | Dimension designed to accommodate the component thickness |
| W | Overall width of the carrier tape |
| P1 | Pitch between successive cavity centers |

**QUADRANT ASSIGNMENTS FOR PIN 1 ORIENTATION IN TAPE**

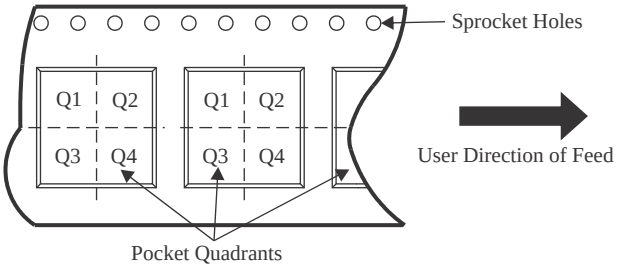


*All dimensions are nominal

| Device | Package Type | Package Drawing | Pins | SPQ | Reel Diameter (mm) | Reel Width W1 (mm) | A0 (mm) | B0 (mm) | K0 (mm) | P1 (mm) | W (mm) | Pin1 Quadrant |
|---|---|---|---|---|---|---|---|---|---|---|---|---|
| CD4011UBM96 | SOIC | D | 14 | 2500 | 330.0 | 16.4 | 6.5 | 9.0 | 2.1 | 8.0 | 16.0 | Q1 |
| CD4011UBNSR | SOP | NS | 14 | 2000 | 330.0 | 16.4 | 8.1 | 10.4 | 2.5 | 12.0 | 16.0 | Q1 |
| CD4011UBPWR | TSSOP | PW | 14 | 2000 | 330.0 | 12.4 | 6.9 | 5.6 | 1.6 | 8.0 | 12.0 | Q1 |

TAPE AND REEL BOX DIMENSIONS

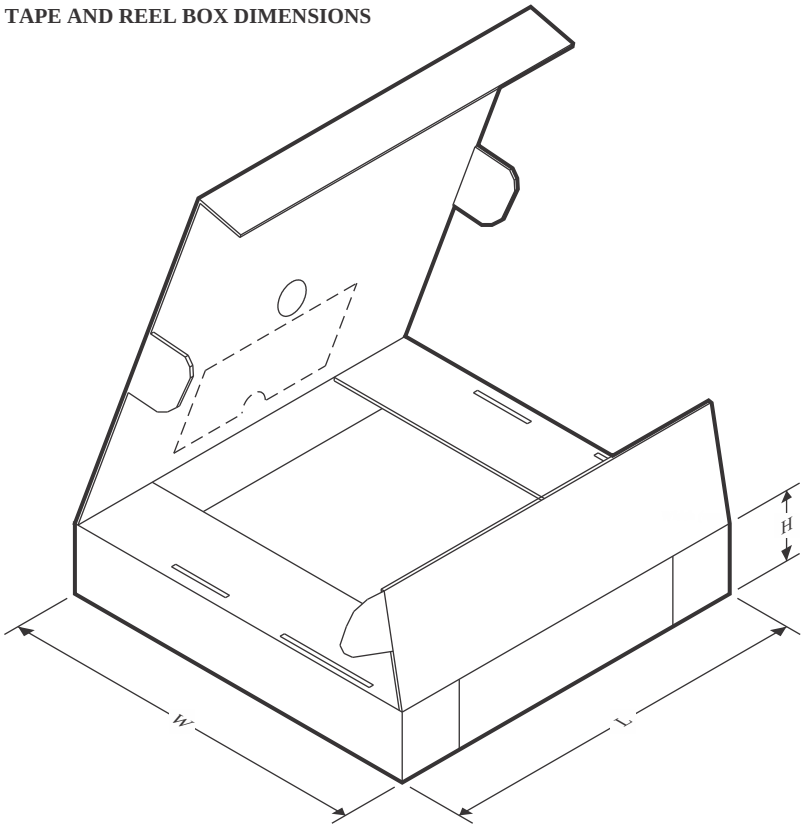


*All dimensions are nominal

| Device | Package Type | Package Drawing | Pins | SPQ | Length (mm) | Width (mm) | Height (mm) |
|---|---|---|---|---|---|---|---|
| CD4011UBM96 | SOIC | D | 14 | 2500 | 353.0 | 353.0 | 32.0 |
| CD4011UBNSR | SOP | NS | 14 | 2000 | 353.0 | 353.0 | 32.0 |
| CD4011UBPWR | TSSOP | PW | 14 | 2000 | 353.0 | 353.0 | 32.0 |

## TUBE

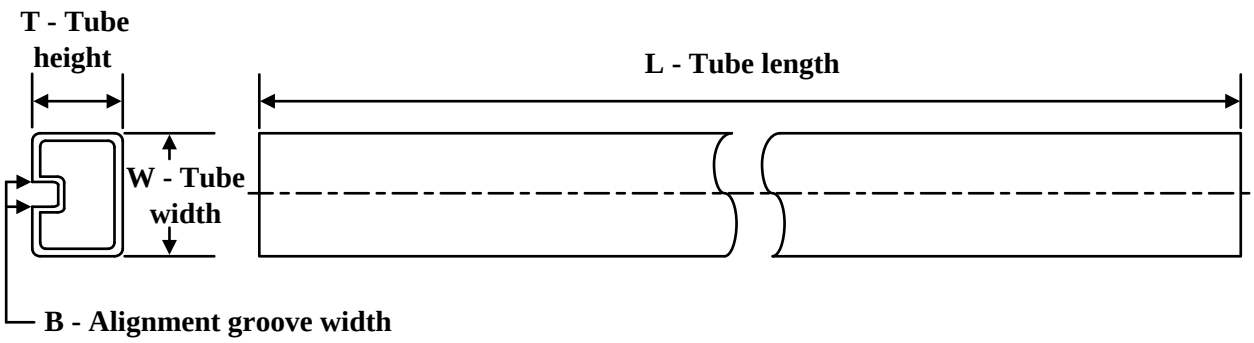


*All dimensions are nominal

| Device | Package Name | Package Type | Pins | SPQ | L (mm) | W (mm) | T (µm) | B (mm) |
|---|---|---|---|---|---|---|---|---|
| CD4011UBE | N | PDIP | 14 | 25 | 506 | 13.97 | 11230 | 4.32 |
| CD4011UBE | N | PDIP | 14 | 25 | 506 | 13.97 | 11230 | 4.32 |
| CD4011UBE.A | N | PDIP | 14 | 25 | 506 | 13.97 | 11230 | 4.32 |
| CD4011UBE.A | N | PDIP | 14 | 25 | 506 | 13.97 | 11230 | 4.32 |
| CD4011UBEE4 | N | PDIP | 14 | 25 | 506 | 13.97 | 11230 | 4.32 |
| CD4011UBEE4 | N | PDIP | 14 | 25 | 506 | 13.97 | 11230 | 4.32 |

# J 14 CDIP - 5.08 mm max height

CERAMIC DUAL IN LINE PACKAGE

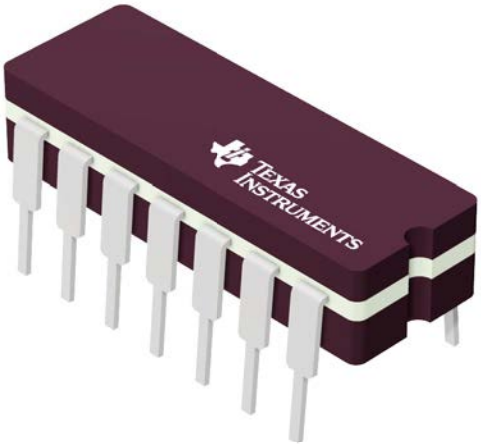


Images above are just a representation of the package family, actual package may vary.
Refer to the product data sheet for package details.

4040083-5/G

# PACKAGE OUTLINE

## J0014A

## CDIP - 5.08 mm max height

CERAMIC DUAL IN LINE PACKAGE

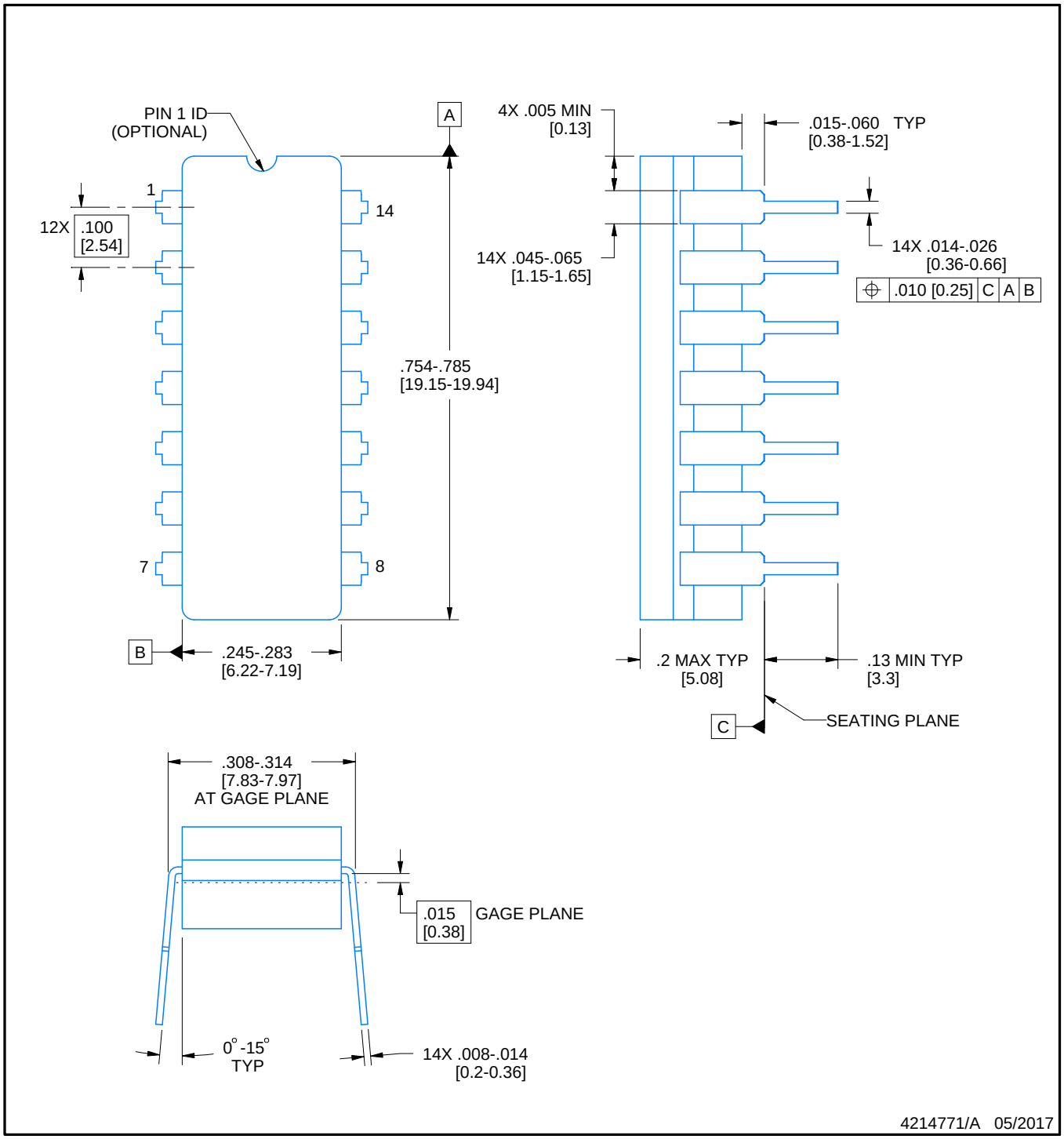


NOTES:

1. All controlling linear dimensions are in inches. Dimensions in brackets are in millimeters. Any dimension in brackets or parenthesis are for reference only. Dimensioning and tolerancing per ASME Y14.5M.
2. This drawing is subject to change without notice.
3. This package is hermitically sealed with a ceramic lid using glass frit.
4. Index point is provided on cap for terminal identification only and on press ceramic glass frit seal only.
5. Falls within MIL-STD-1835 and GDIP1-T14.

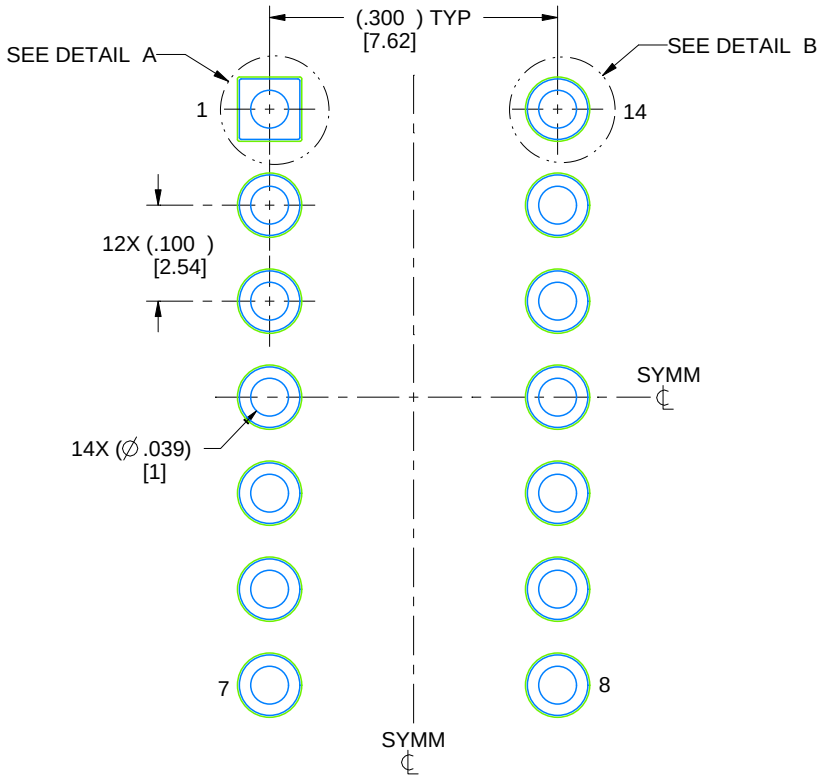


LAND PATTERN EXAMPLE
NON-SOLDER MASK DEFINED
SCALE: 5X

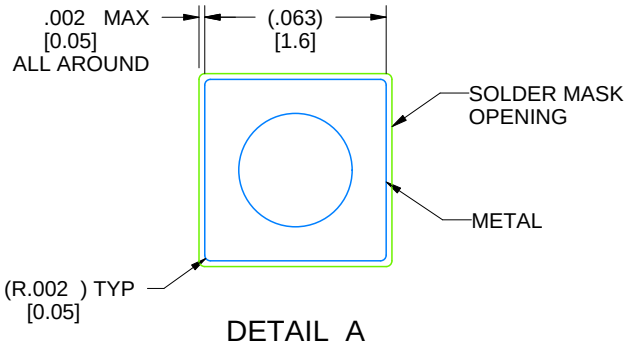


DETAIL A
SCALE: 15X

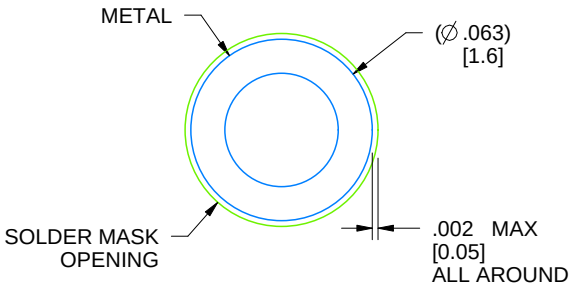


DETAIL B
13X, SCALE: 15X

4214771/A 05/2017

## N (R–PDIP–T**) PLASTIC DUAL–IN–LINE PACKAGE

16 PINS SHOWN

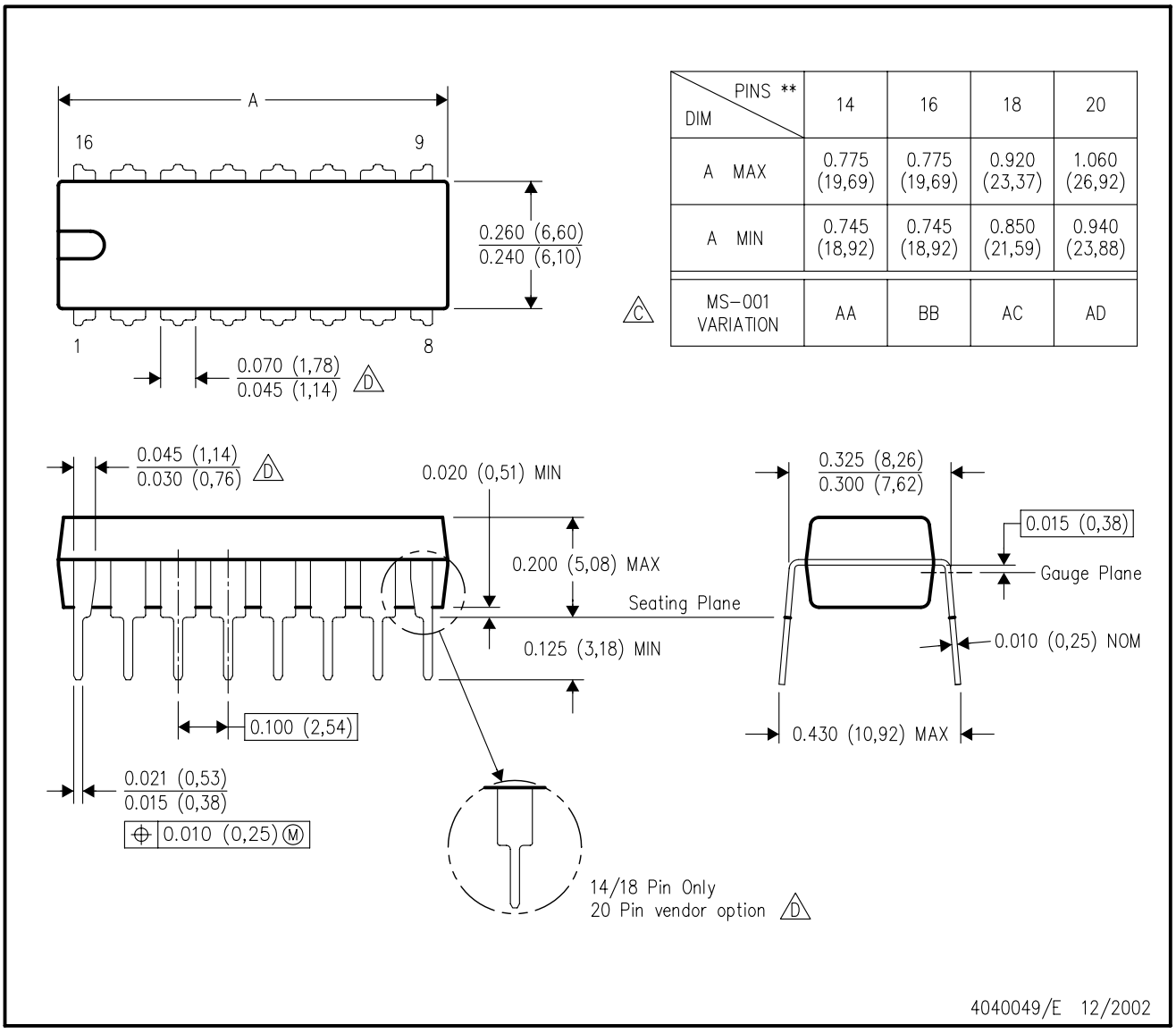


| DIM \ PINS ** | 14 | 16 | 18 | 20 |
|---|---|---|---|---|
| A MAX | 0.775 (19,69) | 0.775 (19,69) | 0.920 (23,37) | 1.060 (26,92) |
| A MIN | 0.745 (18,92) | 0.745 (18,92) | 0.850 (21,59) | 0.940 (23,88) |
| MS–001 VARIATION (C) | AA | BB | AC | AD |

NOTES:
A. All linear dimensions are in inches (millimeters).
B. This drawing is subject to change without notice.
C. Falls within JEDEC MS–001, except 18 and 20 pin minimum body length (Dim A).
D. The 20 pin end lead shoulder width is a vendor option, either half or full width.

# PW0014A

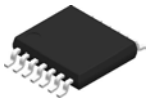

# PACKAGE OUTLINE

## TSSOP - 1.2 mm max height

SMALL OUTLINE PACKAGE

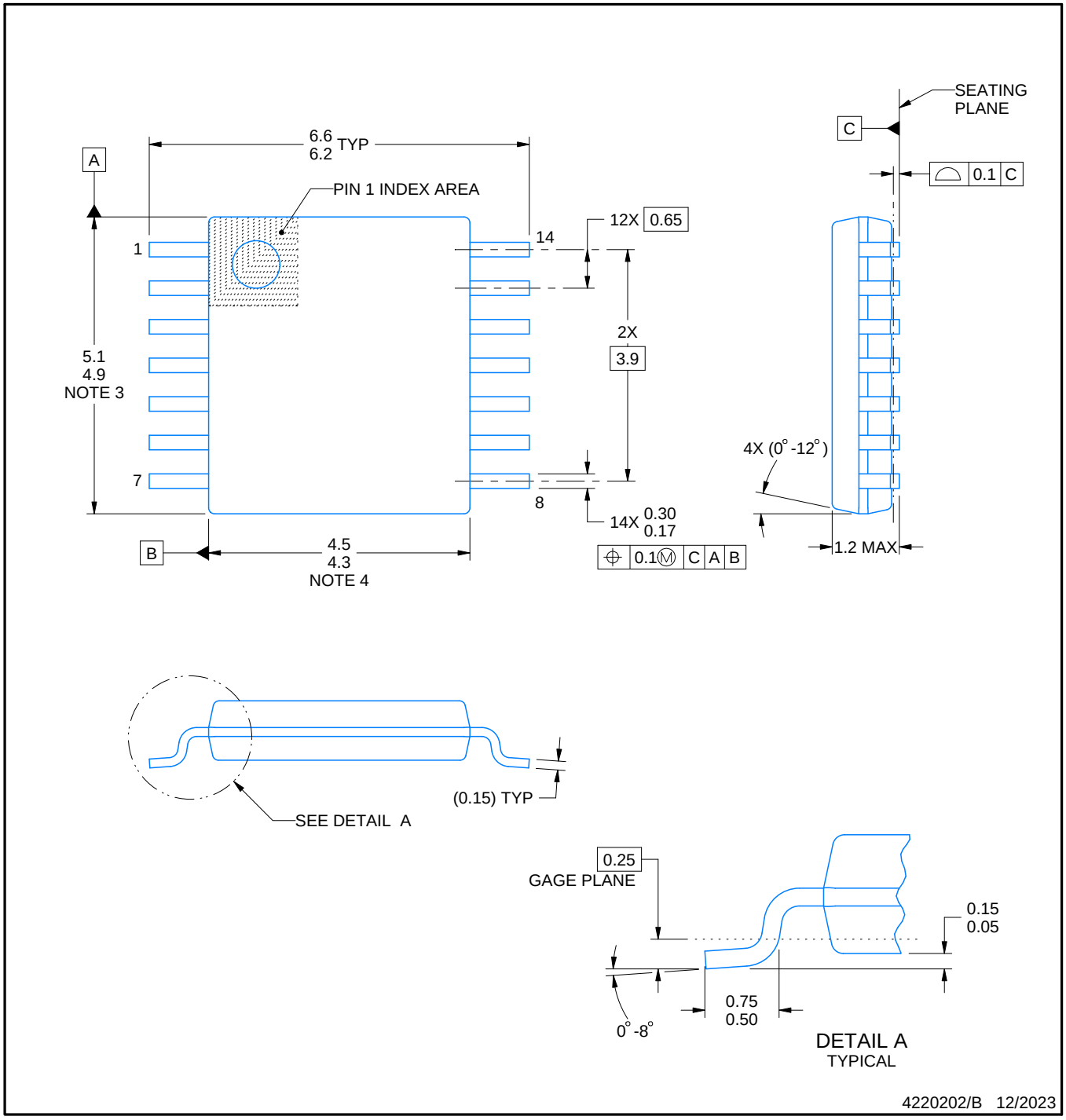


NOTES:

1. All linear dimensions are in millimeters. Any dimensions in parenthesis are for reference only. Dimensioning and tolerancing per ASME Y14.5M.
2. This drawing is subject to change without notice.
3. This dimension does not include mold flash, protrusions, or gate burrs. Mold flash, protrusions, or gate burrs shall not exceed 0.15 mm per side.
4. This dimension does not include interlead flash. Interlead flash shall not exceed 0.25 mm per side.
5. Reference JEDEC registration MO-153.

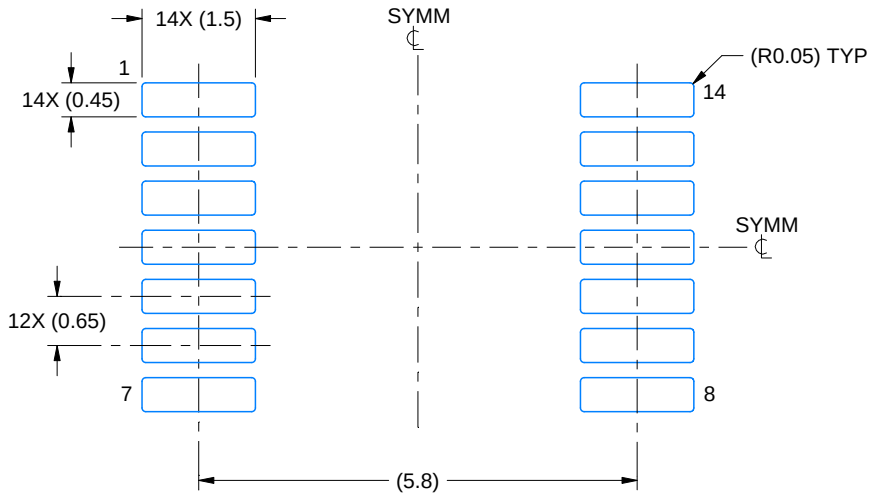


LAND PATTERN EXAMPLE
EXPOSED METAL SHOWN
SCALE: 10X

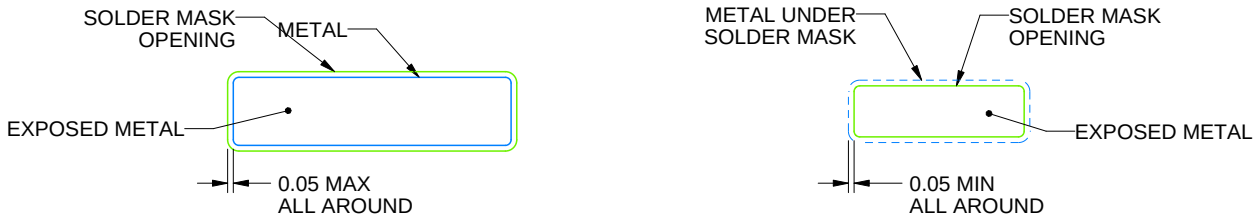


NON-SOLDER MASK DEFINED (PREFERRED)

SOLDER MASK DEFINED

SOLDER MASK DETAILS

4220202/B 12/2023

NOTES: (continued)

6. Publication IPC-7351 may have alternate designs.
7. Solder mask tolerances between and around signal pads can vary based on board fabrication site.

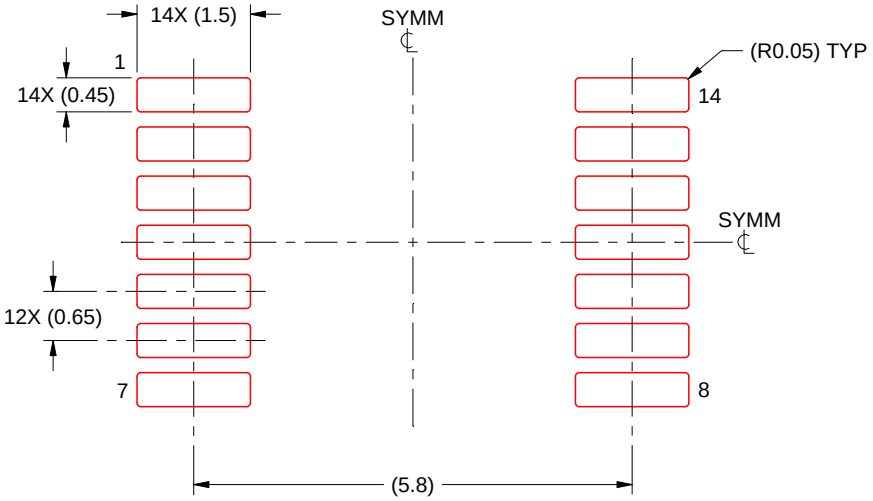


SOLDER PASTE EXAMPLE
BASED ON 0.125 mm THICK STENCIL
SCALE: 10X

4220202/B 12/2023

NOTES: (continued)

8. Laser cutting apertures with trapezoidal walls and rounded corners may offer better paste release. IPC-7525 may have alternate design recommendations.
9. Board assembly site may have different recommendations for stencil design.

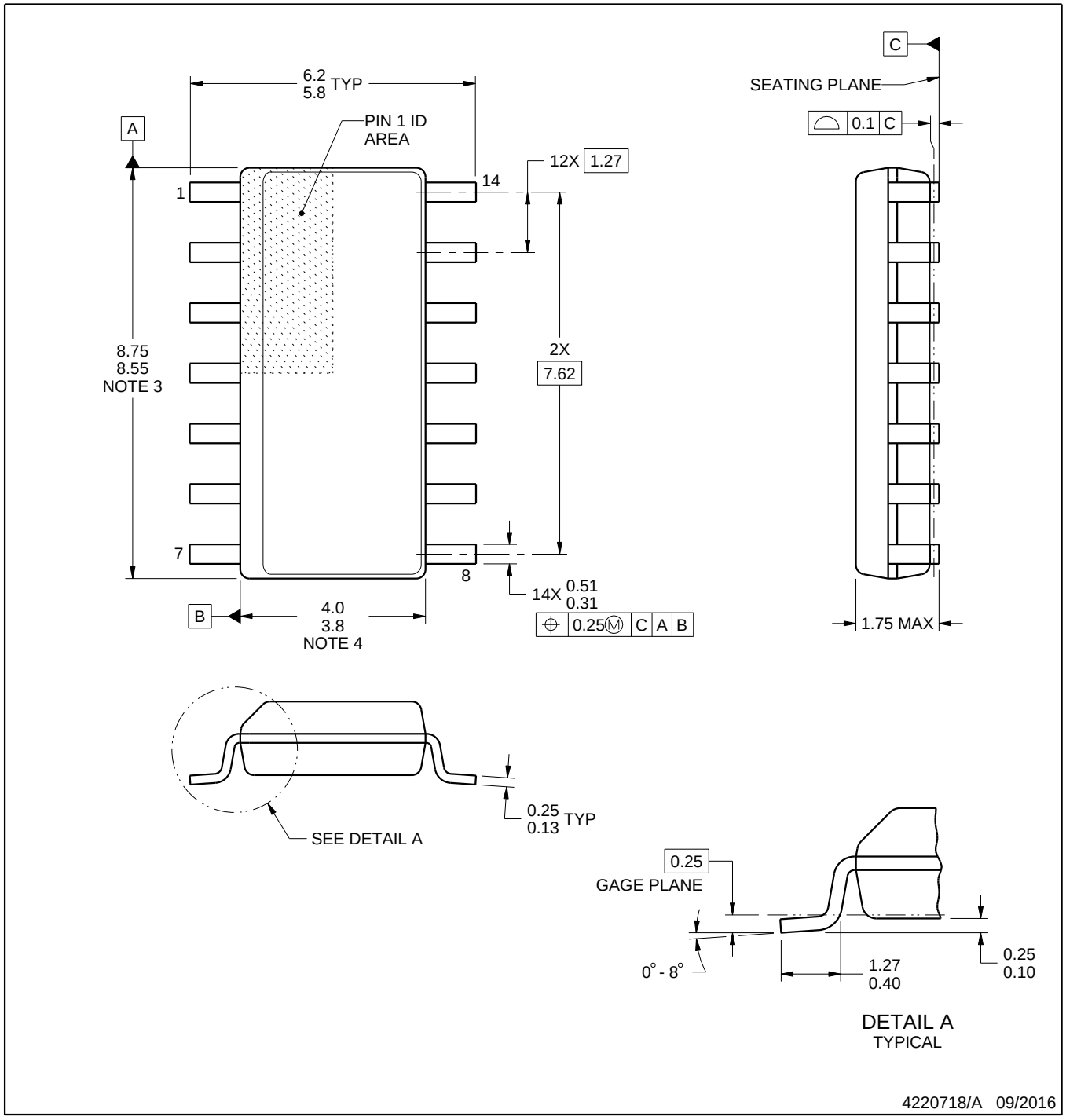


NOTES:

1. All linear dimensions are in millimeters. Dimensions in parenthesis are for reference only. Dimensioning and tolerancing per ASME Y14.5M.
2. This drawing is subject to change without notice.
3. This dimension does not include mold flash, protrusions, or gate burrs. Mold flash, protrusions, or gate burrs shall not exceed 0.15 mm, per side.
4. This dimension does not include interlead flash. Interlead flash shall not exceed 0.43 mm, per side.
5. Reference JEDEC registration MS-012, variation AB.

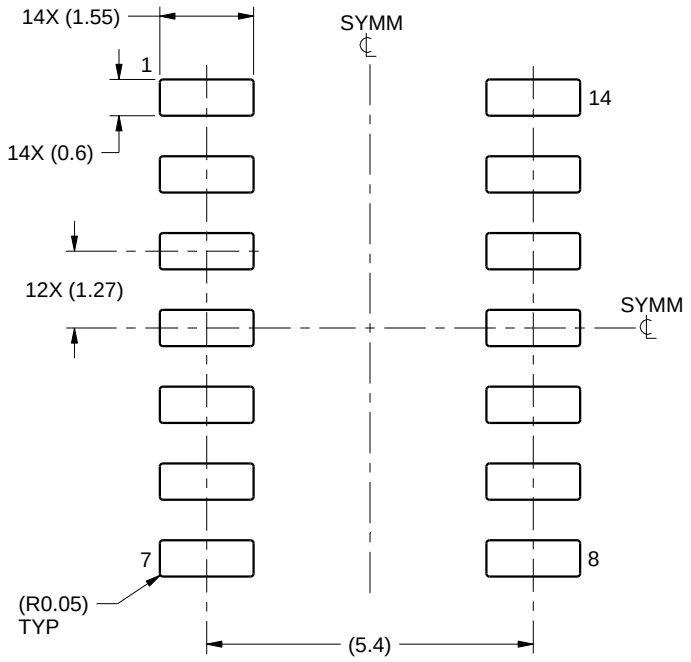


LAND PATTERN EXAMPLE
SCALE:8X

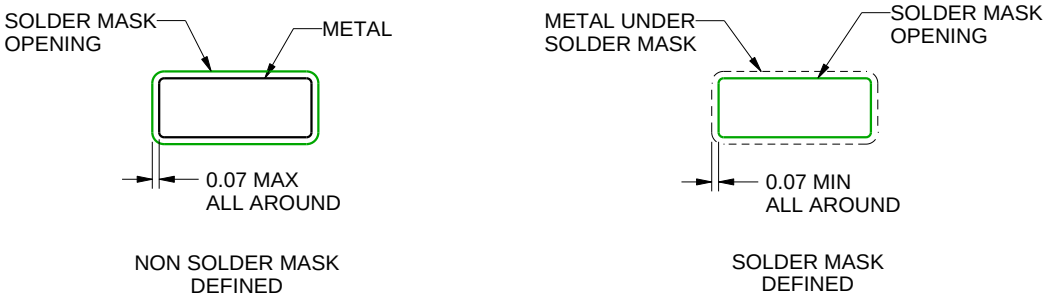


SOLDER MASK DETAILS

4220718/A 09/2016

NOTES: (continued)

6. Publication IPC-7351 may have alternate designs.
7. Solder mask tolerances between and around signal pads can vary based on board fabrication site.

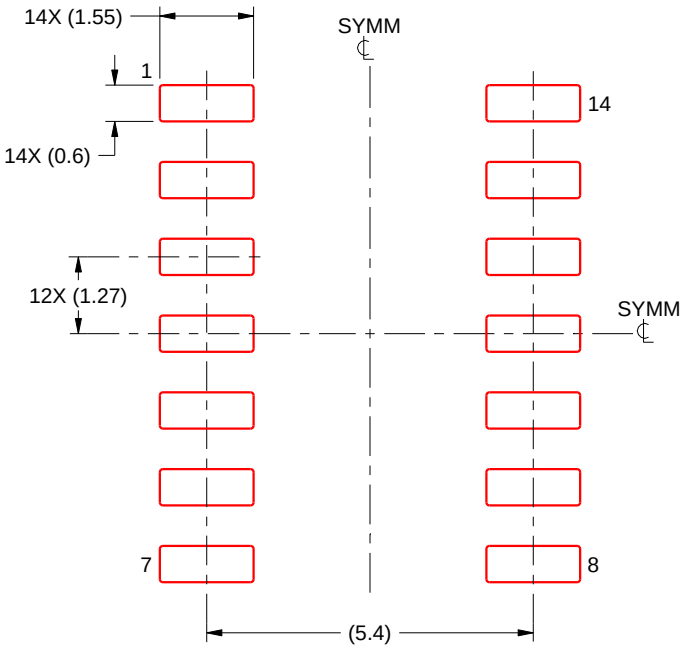


SOLDER PASTE EXAMPLE
BASED ON 0.125 mm THICK STENCIL
SCALE:8X

4220718/A 09/2016

NOTES: (continued)

8. Laser cutting apertures with trapezoidal walls and rounded corners may offer better paste release. IPC-7525 may have alternate design recommendations.
9. Board assembly site may have different recommendations for stencil design.

## MECHANICAL DATA

**NS (R-PDSO-G**)** **PLASTIC SMALL-OUTLINE PACKAGE**

**14-PINS SHOWN**

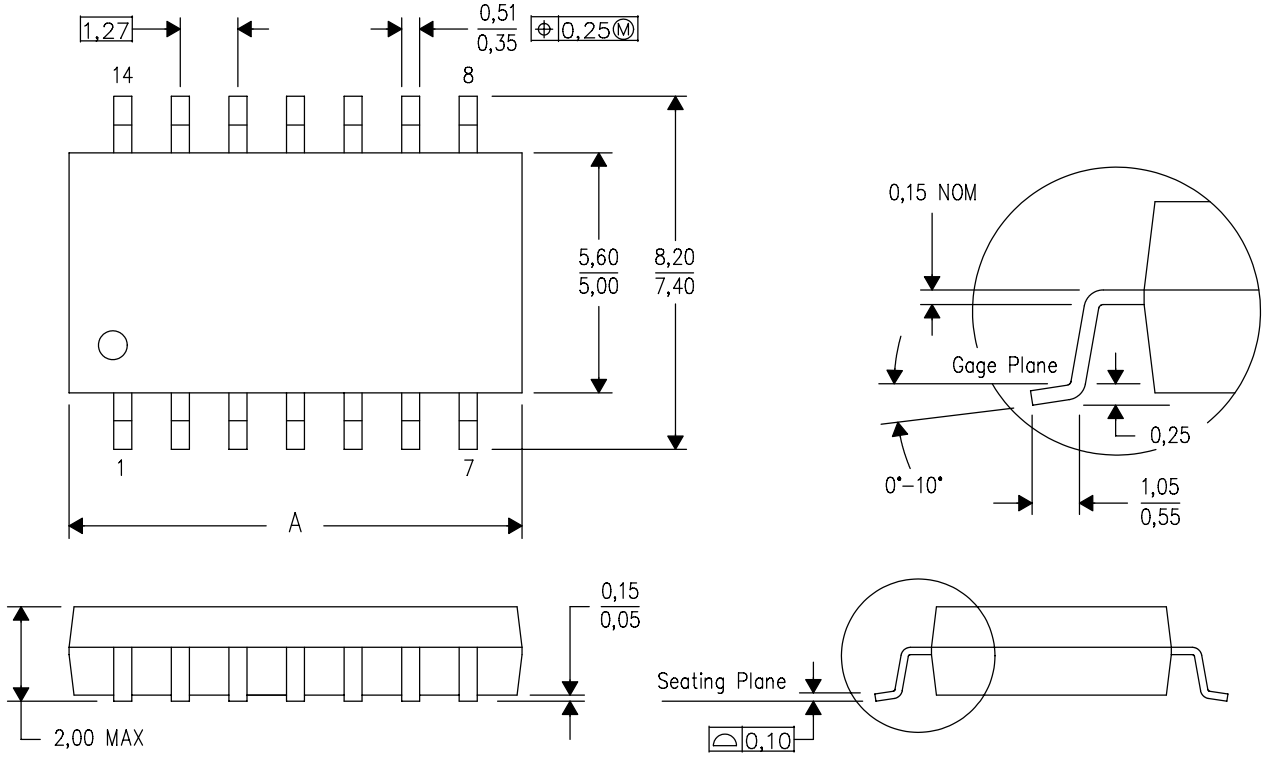


| DIM \ PINS ** | 14 | 16 | 20 | 24 |
|---|---|---|---|---|
| A MAX | 10,50 | 10,50 | 12,90 | 15,30 |
| A MIN | 9,90 | 9,90 | 12,30 | 14,70 |

4040062/C 03/03

NOTES:
A. All linear dimensions are in millimeters.
B. This drawing is subject to change without notice.
C. Body dimensions do not include mold flash or protrusion, not to exceed 0,15.

# IMPORTANT NOTICE AND DISCLAIMER

TI PROVIDES TECHNICAL AND RELIABILITY DATA (INCLUDING DATASHEETS), DESIGN RESOURCES (INCLUDING REFERENCE DESIGNS), APPLICATION OR OTHER DESIGN ADVICE, WEB TOOLS, SAFETY INFORMATION, AND OTHER RESOURCES “AS IS” AND WITH ALL FAULTS, AND DISCLAIMS ALL WARRANTIES, EXPRESS AND IMPLIED, INCLUDING WITHOUT LIMITATION ANY IMPLIED WARRANTIES OF MERCHANTABILITY, FITNESS FOR A PARTICULAR PURPOSE OR NON-INFRINGEMENT OF THIRD PARTY INTELLECTUAL PROPERTY RIGHTS.

These resources are intended for skilled developers designing with TI products. You are solely responsible for (1) selecting the appropriate TI products for your application, (2) designing, validating and testing your application, and (3) ensuring your application meets applicable standards, and any other safety, security, regulatory or other requirements.

These resources are subject to change without notice. TI grants you permission to use these resources only for development of an application that uses the TI products described in the resource. Other reproduction and display of these resources is prohibited. No license is granted to any other TI intellectual property right or to any third party intellectual property right. TI disclaims responsibility for, and you fully indemnify TI and its representatives against any claims, damages, costs, losses, and liabilities arising out of your use of these resources.

TI’s products are provided subject to TI’s Terms of Sale, TI’s General Quality Guidelines, or other applicable terms available either on ti.com or provided in conjunction with such TI products. TI’s provision of these resources does not expand or otherwise alter TI’s applicable warranties or warranty disclaimers for TI products. Unless TI explicitly designates a product as custom or customer-specified, TI products are standard, catalog, general purpose devices.

TI objects to and rejects any additional or different terms you may propose.

Copyright © 2025, Texas Instruments Incorporated

Last updated 10/2025