DRV5023-Q1 Automotive Digital-Switch Hall Effect Sensor

1 Features

- Digital Unipolar-Switch Hall Sensor
- AEC-Q100 Qualified for Automotive Applications
  - Grade 1: T_A = –40 to 125°C (Q, See *Device Nomenclature*)
  - Grade 0: T_A = –40 to 150°C (E, See *Device Nomenclature*)
- Inverse Output Option (FI)
- Superior Temperature Stability
  - Sensitivity ±10% Over Temperature
- Multiple Sensitivity Options (B_{OP} / B_{RP}):
  - 3.5 / 2 mT (FA, FI, see *Device Nomenclature*)
  - 6.9 / 3.2 mT (AJ, see *Device Nomenclature*)
  - 14.5 / 6 mT (BI, see *Device Nomenclature*)
- Supports a Wide Voltage Range
  - 2.7 to 38 V
  - No External Regulator Required
- Open Drain Output (30-mA Sink)
- Fast 35-µs Power-On Time
- Small Package and Footprint
  - Surface Mount 3-Pin SOT-23 (DBZ)
    - 2.92 mm × 2.37 mm
  - Through-Hole 3-Pin TO-92 (LPG)
    - 4.00 mm × 3.15 mm
- **Protection Features**
  - Reverse Supply Protection (up to –22 V)
  - Supports up to 40-V Load Dump
  - Output Short-Circuit Protection
  - Output Current Limitation
  - OUT Short to Battery Protection

2 Applications

- Docking Detection
- Door Open and Close Detection
- Proximity Sensing
- Valve Positioning
- Pulse Counting

3 Description

The DRV5023-Q1 device is a chopper-stabilized Hall Effect Sensor that offers a magnetic sensing solution with superior sensitivity stability over temperature and integrated protection features.

When the applied magnetic flux density exceeds the B_{OP} threshold, the DRV5023-Q1 open-drain output goes low. The output stays low until the field decreases to less than B_{RP}, and then the output goes to high impedance. The output current sink capability is 30 mA. A wide operating voltage range from 2.7 to 38 V with reverse polarity protection up to –22 V makes the device suitable for a wide range of automotive applications.

Internal protection functions are provided for reverse supply conditions, load dump, and output short circuit or over current.

Device Information(1)

PART NUMBER	PACKAGE	BODY SIZE (NOM)
DRV5023-Q1	SOT-23 (3)	2.92 mm × 1.30 mm
	TO-92 (3)	4.00 mm × 3.15 mm

(1) For all available packages, see the orderable addendum at the end of the data sheet.

Output State

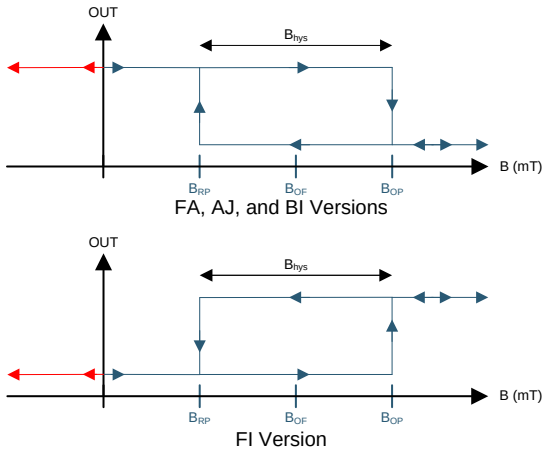

Device Packages

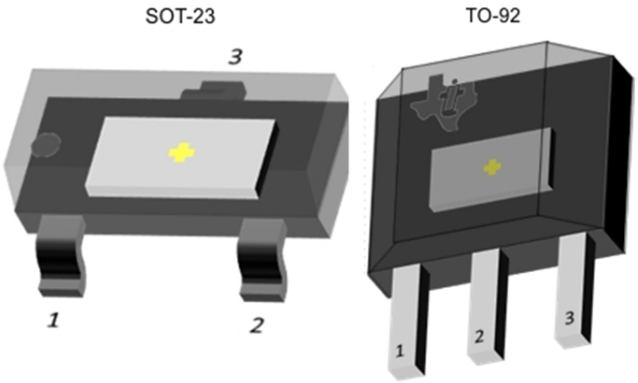

An IMPORTANT NOTICE at the end of this data sheet addresses availability, warranty, changes, use in safety-critical applications, intellectual property matters and other important disclaimers. PRODUCTION DATA.

Table of Contents

1 Features ... 1
2 Applications ... 1
3 Description ... 1
4 Revision History ... 2
5 Pin Configuration and Functions ... 4
6 Specifications ... 5
6.1 Absolute Maximum Ratings ... 5
6.2 ESD Ratings ... 5
6.3 Recommended Operating Conditions ... 5
6.4 Thermal Information ... 5
6.5 Electrical Characteristics ... 6
6.6 Switching Characteristics ... 6
6.7 Magnetic Characteristics ... 6
6.8 Typical Characteristics ... 7
7 Detailed Description ... 9
7.1 Overview ... 9
7.2 Functional Block Diagram ... 9
7.3 Feature Description ... 10
7.4 Device Functional Modes ... 15
8 Application and Implementation ... 16
8.1 Application Information ... 16
8.2 Typical Applications ... 16
9 Power Supply Recommendations ... 18
10 Layout ... 19
10.1 Layout Guidelines ... 19
10.2 Layout Example ... 19
11 Device and Documentation Support ... 20
11.1 Device Support ... 20
11.2 Documentation Support ... 21
11.3 Receiving Notification of Documentation Updates 21
11.4 Community Resources ... 21
11.5 Trademarks ... 21
11.6 Electrostatic Discharge Caution ... 21
11.7 Glossary ... 21
12 Mechanical, Packaging, and Orderable Information ... 21

4 Revision History

NOTE: Page numbers for previous revisions may differ from page numbers in the current version.

Changes from Revision F (September 2016) to Revision G	Page
• Added the output jitter parameter to the *Switching Characteristics* table	6
• Added the *Output Jitter Characteristic* section	15

Changes from Revision E (August 2016) to Revision F	Page
• Made changes to the Power-on time in the *Electrical Characteristics* table	6

Changes from Revision D (May 2016) to Revision E	Page
• Clarified the output description for the FI device version in the *Device Output* section	10
• Added the *Layout* section	19
• Added the *Receiving Notification of Documentation Updates* section	21

Changes from Revision C (February 2016) to Revision D	Page
• Revised preliminary limits for the FA version	6

Changes from Revision B (December 2015) to Revision C	Page
• Added the FA and FI device options	1
• Added the typical bandwidth value to the *Magnetic Characteristics* table	6

Copyright © 2014–2017, Texas Instruments Incorporated

Changes from Revision A (May 2015) to Revision B **Page**

- Corrected body size of SOT-23 package and SIP package name to TO-92 1
- Added B_{MAX} to *Absolute Maximum Ratings* 5
- Removed table notes regarding testing for the operating junction temperature in *Absolute Maximum Ratings* 5
- Updated package tape and reel options for M and blank 20
- Added *Community Resources* 21

Changes from Original (December 2014) to Revision A **Page**

- Updated device status to production data 1

5 Pin Configuration and Functions

For additional configuration information, see *Device Markings* and *Mechanical, Packaging, and Orderable Information*.

DBZ Package
3-Pin SOT-23
Top View

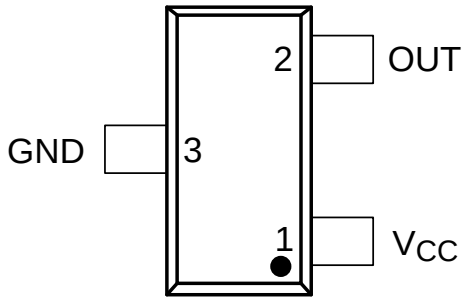

LPG Package
3-Pin TO-92
Top View

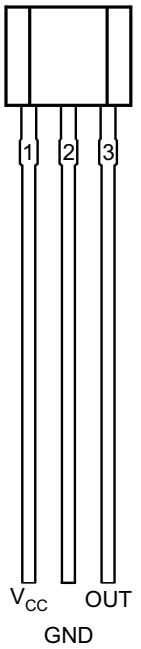

Pin Functions

PIN			TYPE	DESCRIPTION
NAME	DBZ	LPG		
GND	3	2	GND	Ground pin
OUT	2	3	Output	Hall sensor open-drain output. The open drain requires a resistor pullup.
V_{CC}	1	1	Power	2.7 to 38 V power supply. Bypass this pin to the GND pin with a 0.01-μF (minimum) ceramic capacitor rated for V_{CC}.

Copyright © 2014–2017, Texas Instruments Incorporated

6 Specifications

6.1 Absolute Maximum Ratings

over operating free-air temperature range (unless otherwise noted)[1]

		MIN	MAX	UNIT
Power supply voltage	V_{CC}	–22[2]	40	V
	Voltage ramp rate (V_{CC}), V_{CC} < 5 V	Unlimited		V/µs
	Voltage ramp rate (V_{CC}), V_{CC} > 5 V	0	2	
Output pin voltage		–0.5	40	V
Output pin reverse current during reverse supply condition		0	100	mA
Magnetic flux density, B_{MAX}		Unlimited		
Operating junction temperature, T_J	Q, see Figure 26	–40	150	°C
	E, see Figure 26	–40	175	
Storage temperature, T_{stg}		–65	150	°C

(1) Stresses beyond those listed under *Absolute Maximum Ratings* may cause permanent damage to the device. These are stress ratings only, which do not imply functional operation of the device at these or any other conditions beyond those indicated under *Recommended Operating Conditions*. Exposure to absolute-maximum-rated conditions for extended periods may affect device reliability.
(2) Ensured by design. Only tested to –20 V.

6.2 ESD Ratings

			VALUE	UNIT
$V_{(ESD)}$	Electrostatic discharge	Human-body model (HBM), per AEC Q100-002[1]	±2500	V
		Charged-device model (CDM), per AEC Q100-011	±500	

(1) AEC Q100-002 indicates that HBM stressing shall be in accordance with the ANSI/ESDA/JEDEC JS-001 specification.

6.3 Recommended Operating Conditions

over operating free-air temperature range (unless otherwise noted)

			MIN	MAX	UNIT
V_{CC}	Power supply voltage		2.7	38	V
V_O	Output pin voltage (OUT)		0	38	V
I_{SINK}	Output pin current sink (OUT)[1]		0	30	mA
T_A	Operating ambient temperature	Q, see Figure 26	–40	125	°C
		E, see Figure 26	–40	150	

(1) Power dissipation and thermal limits must be observed.

6.4 Thermal Information

THERMAL METRIC[1]		DRV5023-Q1		UNIT
		DBZ (SOT-23)	LPG (TO-92)	
		3 PINS	3 PINS	
$R_{\theta JA}$	Junction-to-ambient thermal resistance	333.2	180	°C/W
$R_{\theta JC(top)}$	Junction-to-case (top) thermal resistance	99.9	98.6	°C/W
$R_{\theta JB}$	Junction-to-board thermal resistance	66.9	154.9	°C/W
ψ_{JT}	Junction-to-top characterization parameter	4.9	40	°C/W
ψ_{JB}	Junction-to-board characterization parameter	65.2	154.9	°C/W

(1) For more information about traditional and new thermal metrics, see the *Semiconductor and IC Package Thermal Metrics* application report.

Copyright © 2014–2017, Texas Instruments Incorporated

6.5 Electrical Characteristics

over operating free-air temperature range (unless otherwise noted)

PARAMETER		TEST CONDITIONS	MIN	TYP	MAX	UNIT
POWER SUPPLIES (V_{CC})						
V_{CC}	V_{CC} operating voltage		2.7		38	V
I_{CC}	Operating supply current	V_{CC} = 2.7 to 38 V, T_A = 25°C		2.7		mA
		V_{CC} = 2.7 to 38 V, $T_A = T_{A, MAX}$ (1)		3	3.5	
t_{on}	Power-on time	AJ, BI versions		35	50	µs
		FA, FI versions		35	70	
OPEN DRAIN OUTPUT (OUT)						
$r_{DS(on)}$	FET on-resistance	V_{CC} = 3.3 V, I_O = 10 mA, T_A = 25°C		22		Ω
		V_{CC} = 3.3 V, I_O = 10 mA, T_A = 125°C		36	50	
$I_{lkg(off)}$	Off-state leakage current	Output Hi-Z			1	µA
PROTECTION CIRCUITS						
V_{CCR}	Reverse supply voltage		–22			V
I_{OCP}	Overcurrent protection level	OUT shorted V_{CC}	15	30	45	mA

(1) $T_{A, MAX}$ is 125°C for Q Grade 1 devices and 150°C for E Grade 0 devices (see Figure 26)

6.6 Switching Characteristics

over operating free-air temperature range (unless otherwise noted)

PARAMETER		TEST CONDITIONS	MIN	TYP	MAX	UNIT
OPEN DRAIN OUTPUT (OUT)						
t_d	Output delay time	B = B_{RP} – 10 mT to B_{OP} + 10 mT in 1 µs		13	25	µs
t_r	Output rise time (10% to 90%)	R1 = 1 kΩ, C_O = 50 pF, V_{CC} = 3.3 V		200		ns
t_f	Output fall time (90% to 10%)	R1 = 1 kΩ, C_O = 50 pF, V_{CC} = 3.3 V		31		ns
t_j	Output jitter	Measured from 20 000 cycles of B increasing at a rate of 50 mT/ms (see Figure 19)		±8.5		µs

6.7 Magnetic Characteristics

over operating free-air temperature range (unless otherwise noted)

PARAMETER		TEST CONDITIONS	MIN	TYP	MAX	UNIT (1)
f_{BW}	Bandwidth (2)		20	30		kHz
DRV5023FA, DRV5023FI: 3.5 / 2 mT						
B_{OP}	Operate point (see Figure 12 and Figure 13)		1.8	3.5	6.8	mT
B_{RP}	Release point (see Figure 12 and Figure 13)		0.5	2	4.2	mT
B_{hys}	Hysteresis; B_{hys}= (B_{OP} – B_{RP})			1.5		mT
B_O	Magnetic offset, B_O = (B_{OP} + B_{RP}) / 2			2.8		mT
DRV5023AJ: 6.9 / 3.2 mT						
B_{OP}	Operate point (see Figure 12 and Figure 13)		3	6.9	12	mT
B_{RP}	Release point (see Figure 12 and Figure 13)		1	3.2	5	mT
B_{hys}	Hysteresis; B_{hys}= (B_{OP} – B_{RP})			3.7		mT
B_O	Magnetic offset, B_O = (B_{OP} + B_{RP}) / 2			5		mT
DRV5023BI: 14.5 / 6 mT						
B_{OP}	Operate point (see Figure 12 and Figure 13)		6	14.5	24	mT
B_{RP}	Release point (see Figure 12 and Figure 13)		3	6	9	mT
B_{hys}	Hysteresis; B_{hys} = (B_{OP} – B_{RP}) (3)			8.5		mT
B_O	Magnetic offset, B_O = (B_{OP} + B_{RP}) / 2			10.3		mT

(1) 1 mT = 10 Gauss
(2) Bandwidth describes the fastest changing magnetic field that can be detected and translated to the output.
(3) $|B_{OP}|$ is always greater than $|B_{RP}|$.

Copyright © 2014–2017, Texas Instruments Incorporated

6.8 Typical Characteristics

T_A > 125°C data is valid for Grade 0 devices only (E, see Figure 26)

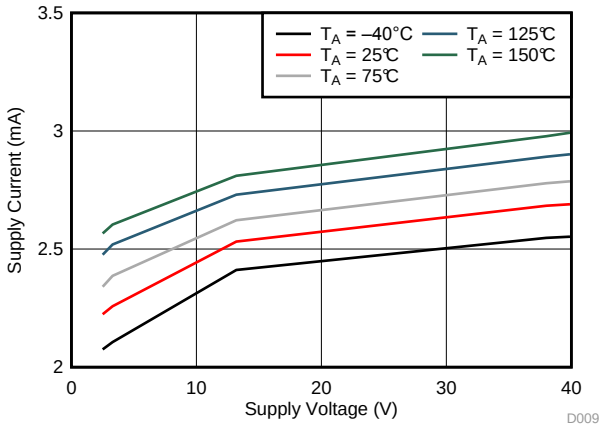

Figure 1. I_{CC} vs V_{CC}

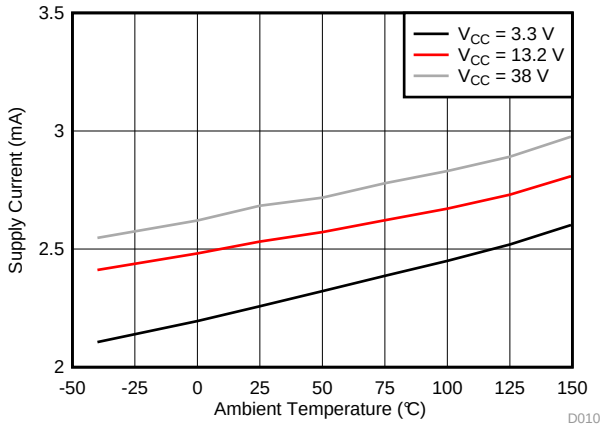

Figure 2. I_{CC} vs Temperature

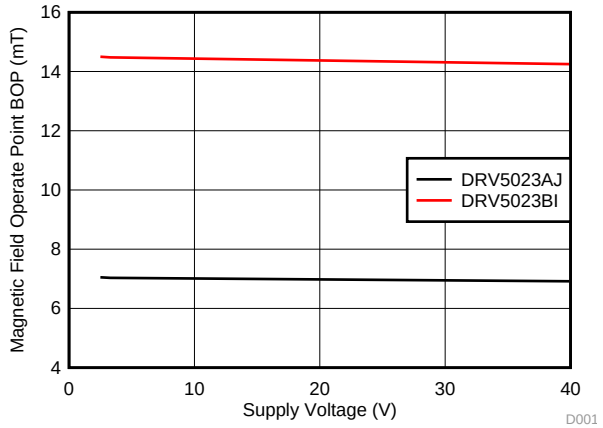

T_A = 25°C

Figure 3. B_{OP} vs V_{CC}

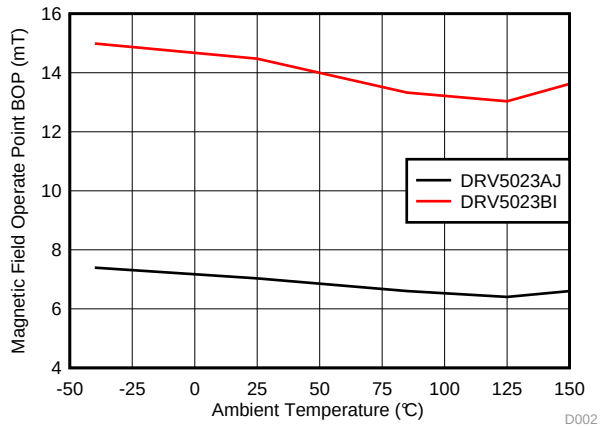

V_{CC} = 3.3 V

Figure 4. B_{OP} vs Temperature

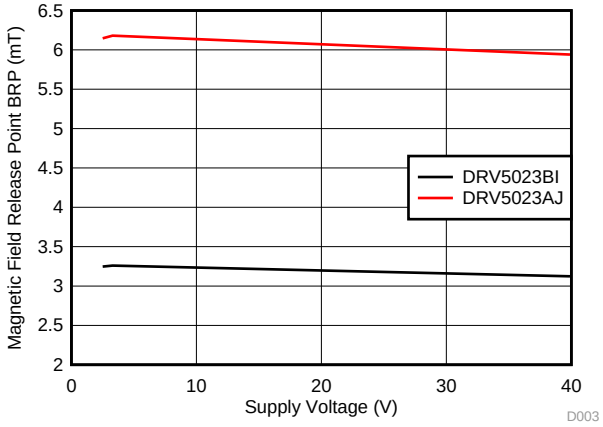

T_A = 25°C

Figure 5. B_{RP} vs V_{CC}

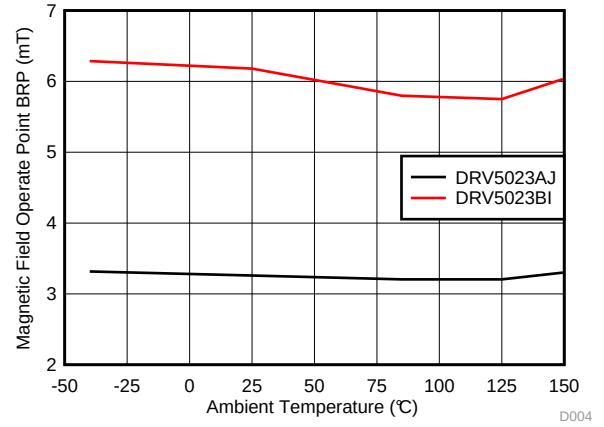

V_{CC} = 3.3 V

Figure 6. B_{RP} vs Temperature

Typical Characteristics (continued)

T_A > 125°C data is valid for Grade 0 devices only (E, see Figure 26)

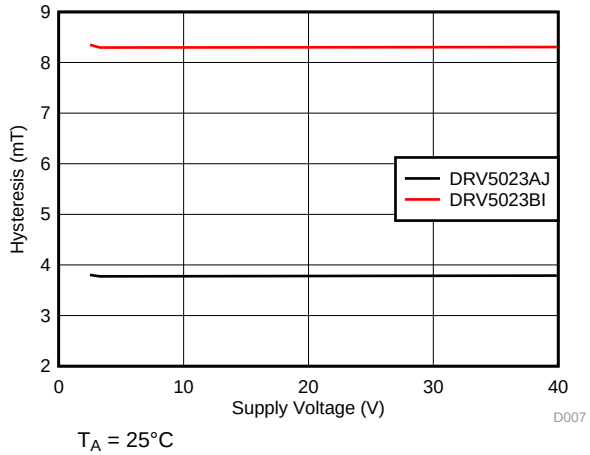

Figure 7. Hysteresis vs V_{CC}

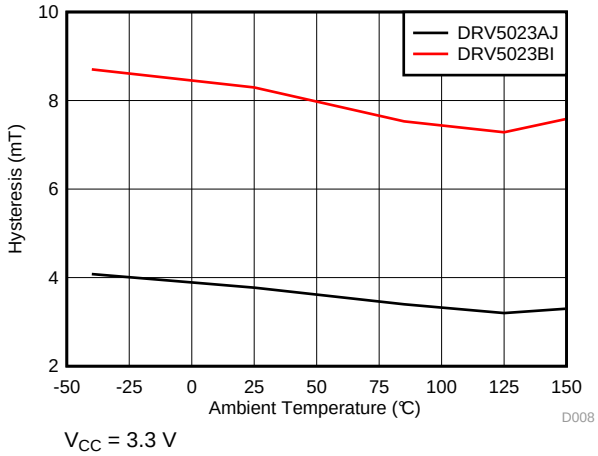

Figure 8. Hysteresis vs Temperature

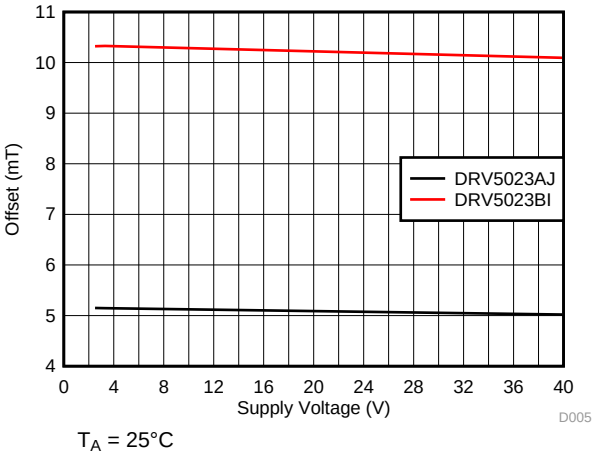

Figure 9. Offset vs V_{CC}

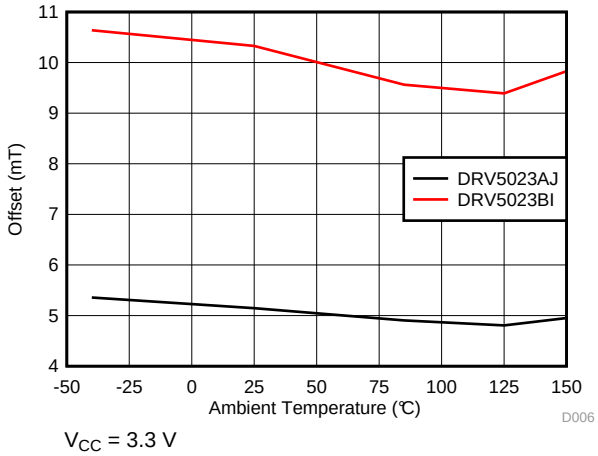

Figure 10. Offset vs Temperature

Copyright © 2014–2017, Texas Instruments Incorporated

7 Detailed Description

7.1 Overview

The DRV5023-Q1 device is a chopper-stabilized Hall sensor with a digital output for magnetic sensing applications. The DRV5023-Q1 device can be powered with a supply voltage between 2.7 and 38 V, and will survive –22 V reverse-battery conditions. The DRV5023-Q1 device does not operate when –22 to 2.4 V is applied to the V_{CC} pin (with respect to GND pin). In addition, the device can withstand supply voltages up to 40 V for transient durations.

The field polarity is defined as follows: a south pole near the marked side of the package is a positive magnetic field. A north pole near the marked side of the package is a negative magnetic field. The output state is dependent on the magnetic field perpendicular to the package.

For the FA, AJ, and BI device versions, a strong south pole near the marked side of the package causes the output to pull low, and the absence of a field makes the output high-impedance. The FI version has an inverted output response, where a strong south pole causes the output to be high-impedance, and the absence of a field makes the output pull low. Hysteresis is included in between the operate point and the release point to prevent toggling near the magnetic threshold.

An external pullup resistor is required on the OUT pin. The OUT pin can be pulled up to V_{CC}, or to a different voltage supply. This allows for easier interfacing with controller circuits.

7.2 Functional Block Diagram

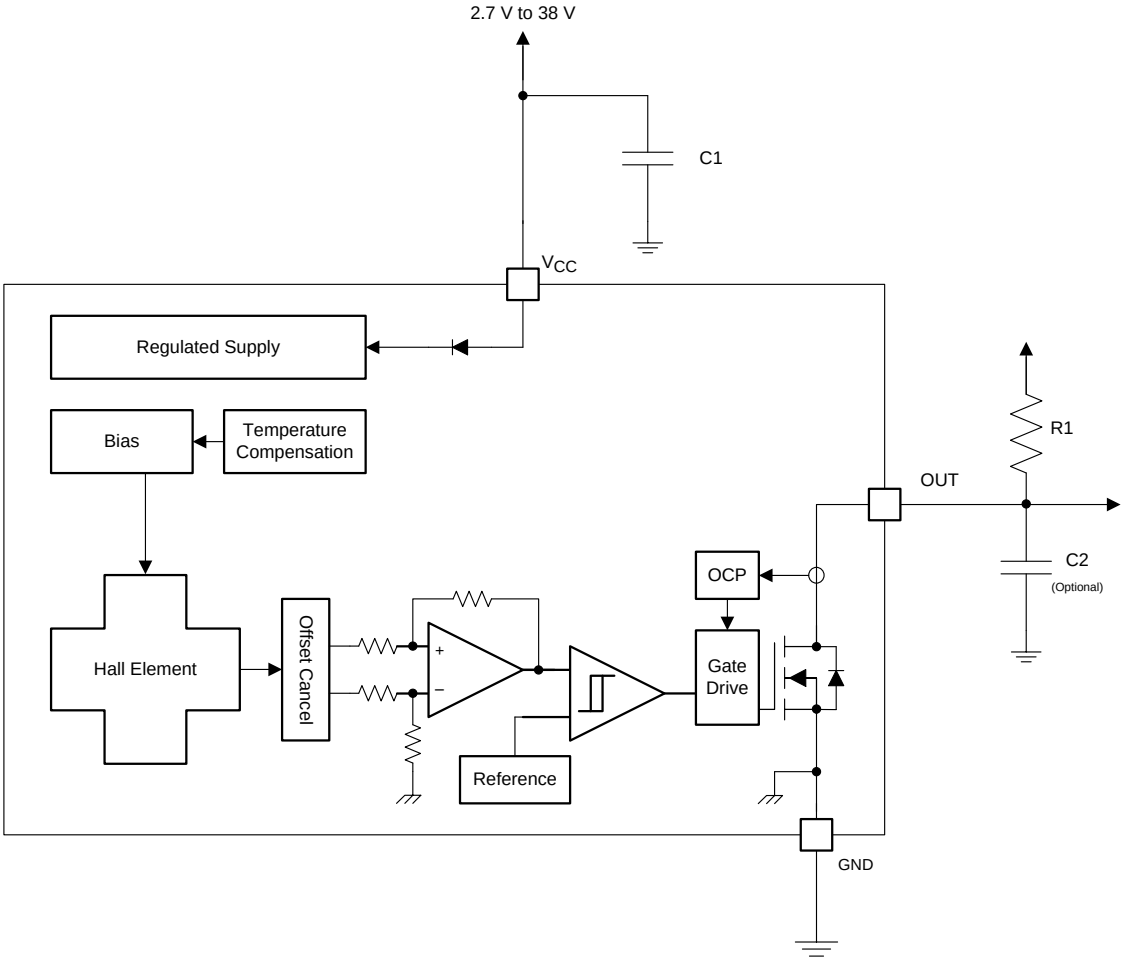

7.3 Feature Description

7.3.1 Field Direction Definition

A positive magnetic field is defined as a south pole near the marked side of the package as shown in Figure 11.

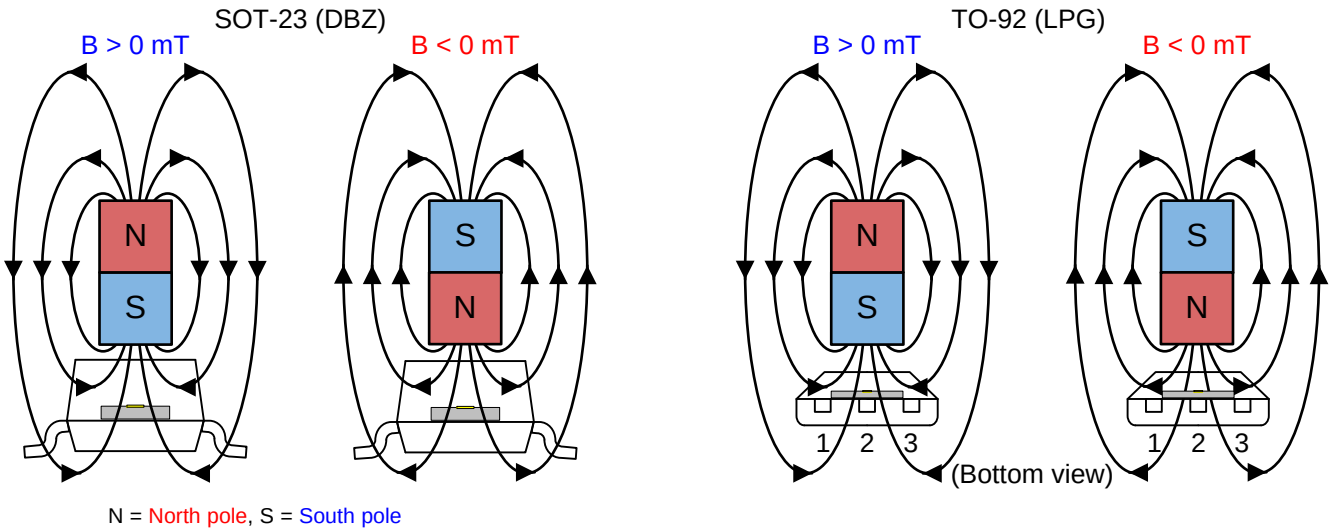

Figure 11. Field Direction Definition

7.3.2 Device Output

If the device is powered on with a magnetic field strength between B_{RP} and B_{OP}, then the device output is indeterminate and can either be Hi-Z or Low. For the FA, AJ, and BI device versions, if the field strength is greater than B_{OP}, then the output is pulled low; if the field strength is less than B_{RP}, then the output is released. For the FI device version, if the field strength is greater than B_{OP}, then the output is Hi-Z; if the field strength is less than B_{RP}, then the output is pulled Low.

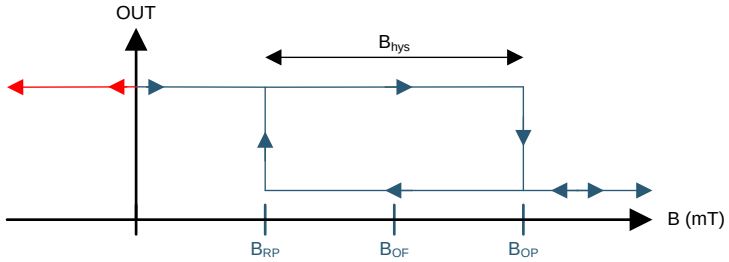

Figure 12. Output State of FA, AJ, BI Versions

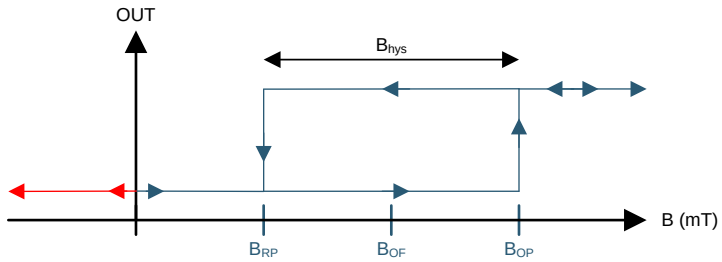

Figure 13. Output State of FI Version

Copyright © 2014–2017, Texas Instruments Incorporated

Feature Description (continued)

7.3.3 Power-On Time

After applying V_{CC} to the DRV5023-Q1 device, t_{on} must elapse before the OUT pin is valid. During the power-up sequence, the output is Hi-Z. A pulse as shown in Figure 14 and Figure 15 occurs at the end of t_{on}. This pulse can allow the host processor to determine when the DRV5023-Q1 output is valid after startup. In Case 1 (Figure 14) and Case 2 (Figure 15), the output is defined assuming a constant magnetic field B > B_{OP} and B < B_{RP}.

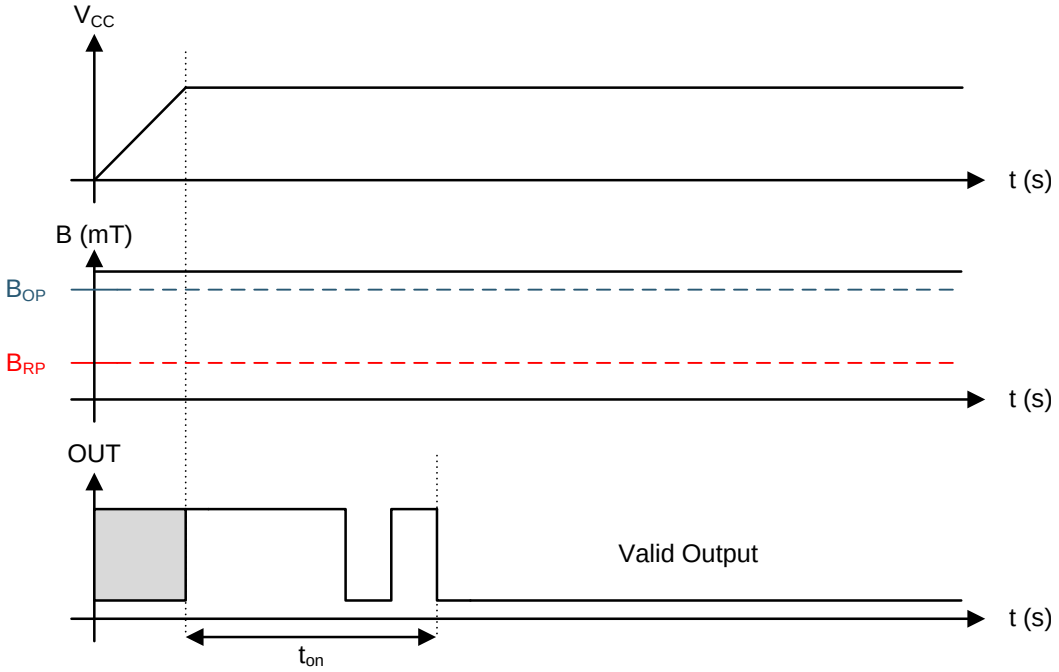

Figure 14. Case 1: Power On When B > B_{OP}

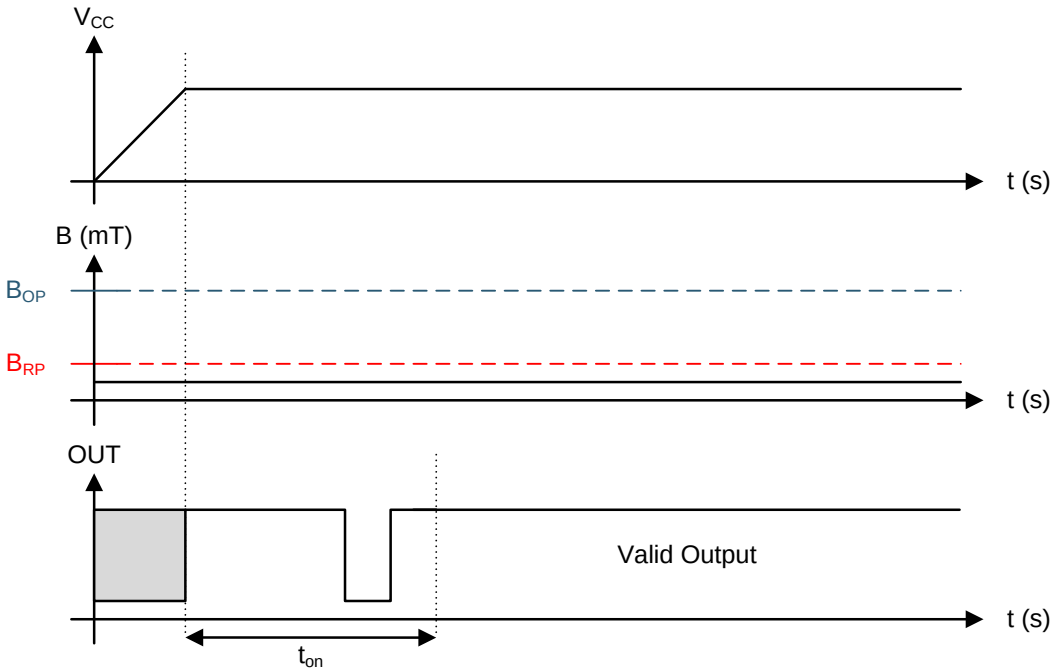

Figure 15. Case 2: Power On When B < B_{RP}

Feature Description (continued)

If the device is powered on with the magnetic field strength $B_{RP} < B < B_{OP}$, then the device output is indeterminate and can either be Hi-Z or pulled low. During the power-up sequence, the output is held Hi-Z until t_{on} has elapsed. At the end of t_{on}, a pulse is given on the OUT pin to indicate that t_{on} has elapsed. After t_{on}, if the magnetic field changes such that $B_{OP} < B$, the output is released. Case 3 (Figure 16) and Case 4 (Figure 17) show examples of this behavior.

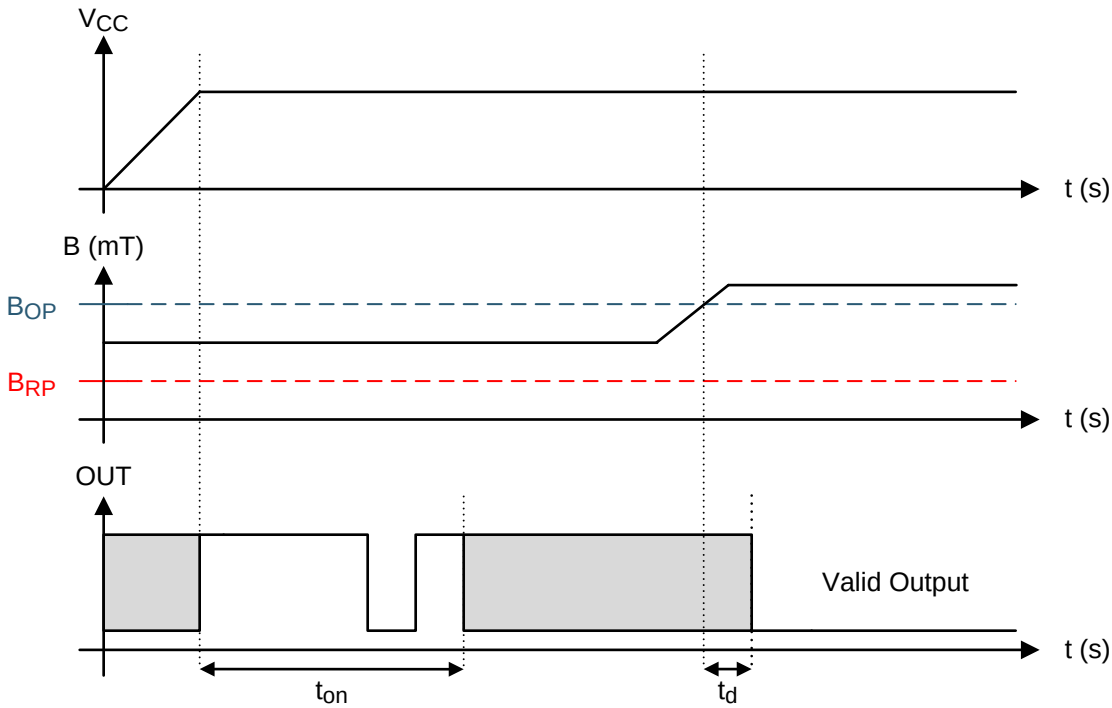

Figure 16. Case 3: Power On When $B_{RP} < B < B_{OP}$, Followed by $B > B_{OP}$

Copyright © 2014–2017, Texas Instruments Incorporated

Feature Description (continued)

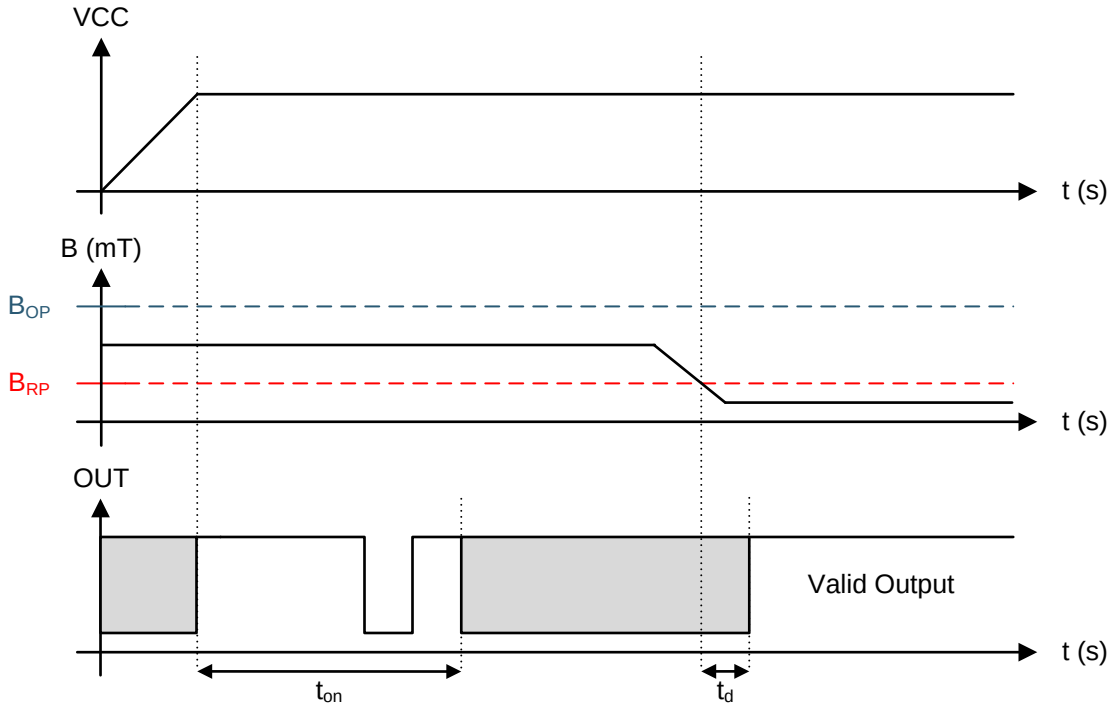

Figure 17. Case 4: Power On When B_{RP} < B < B_{OP}, Followed by B < B_{RP}

Feature Description (continued)

7.3.4 Output Stage

The DRV5023-Q1 output stage uses an open-drain NMOS, and it is rated to sink up to 30 mA of current. For proper operation, calculate the value of the pullup resistor R1 using Equation 1.

$$\frac{V_{ref}\ max}{30\ mA} \le R1 \le \frac{V_{ref}\ min}{100\ \mu A} \tag{1}$$

The size of R1 is a tradeoff between the OUT rise time and the current when OUT is pulled low. A lower current is generally better, however faster transitions and bandwidth require a smaller resistor for faster switching.

In addition, ensure that the value of R1 > 500 Ω to ensure the output driver can pull the OUT pin close to GND.

NOTE

V_{ref} is not restricted to V_{CC}. The allowable voltage range of this pin is specified in the *Absolute Maximum Ratings*.

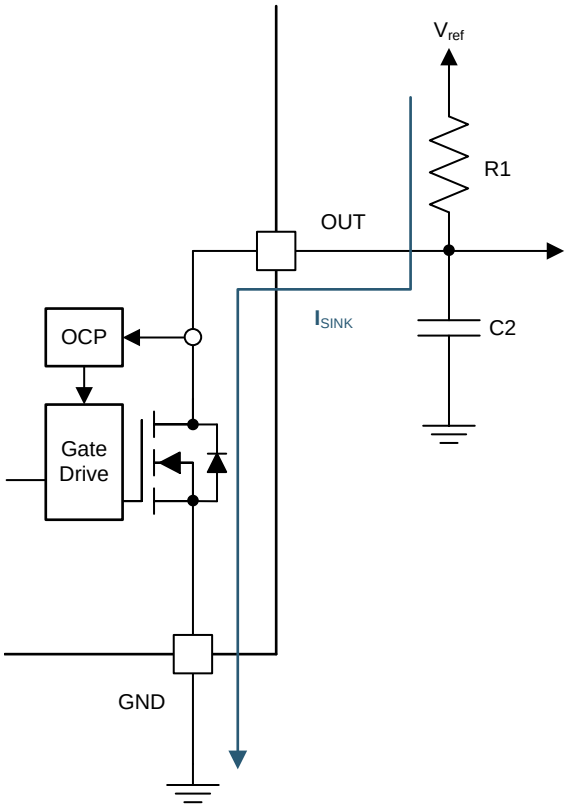

Figure 18.

Select a value for C2 based on the system bandwidth specifications as shown in Equation 2.

$$2 \times f_{BW}\ (Hz) < \frac{1}{2\pi \times R1 \times C2} \tag{2}$$

Most applications do not require this C2 filtering capacitor.

Copyright © 2014–2017, Texas Instruments Incorporated

Feature Description (continued)

7.3.5 Protection Circuits

The DRV5023-Q1 device is fully protected against overcurrent and reverse-supply conditions.

7.3.5.1 Overcurrent Protection (OCP)

An analog current-limit circuit limits the current through the FET. The driver current is clamped to I_{OCP}. During this clamping, the $r_{DS(on)}$ of the output FET is increased from the nominal value.

7.3.5.2 Load Dump Protection

The DRV5023-Q1 device operates at DC V_{CC} conditions up to 38 V nominally, and can additionally withstand V_{CC} = 40 V. No current-limiting series resistor is required for this protection.

7.3.5.3 Reverse Supply Protection

The DRV5023-Q1 device is protected in the event that the V_{CC} pin and the GND pin are reversed (up to –22 V).

NOTE

In a reverse supply condition, the OUT pin reverse-current must not exceed the ratings specified in the *Absolute Maximum Ratings*.

Table 1.

FAULT	CONDITION	DEVICE	DESCRIPTION	RECOVERY
FET overload (OCP)	$I_{SINK} \geq I_{OCP}$	Operating	Output current is clamped to I_{OCP}	$I_O < I_{OCP}$
Load dump	38 V < V_{CC} < 40 V	Operating	Device will operate for a transient duration	$V_{CC} \leq$ 38 V
Reverse supply	–22 V < V_{CC} < 0 V	Disabled	Device will survive this condition	$V_{CC} \geq$ 2.7 V

7.3.5.4 Output Jitter Characteristic

The DRV5023-Q1 propagation delay is not fully consistent. If a periodic magnetic field is applied, the device introduces a small amount of jitter on the output. The t_j parameter describes this characteristic and Figure 19 shows the test waveform.

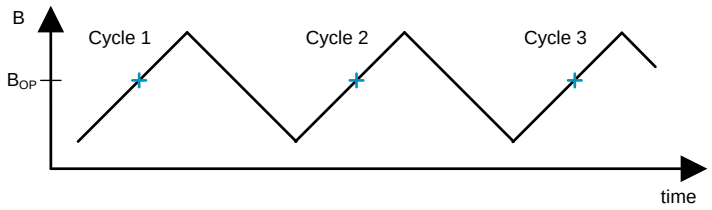

Figure 19. Test Waveform for t_j

7.4 Device Functional Modes

The DRV5023-Q1 device is active only when V_{CC} is between 2.7 and 38 V.

When a reverse supply condition exists, the device is inactive.

8 Application and Implementation

NOTE

Information in the following applications sections is not part of the TI component specification, and TI does not warrant its accuracy or completeness. TI's customers are responsible for determining suitability of components for their purposes. Customers should validate and test their design implementation to confirm system functionality.

8.1 Application Information

The DRV5023-Q1 device is used in magnetic-field sensing applications.

8.2 Typical Applications

8.2.1 Standard Circuit

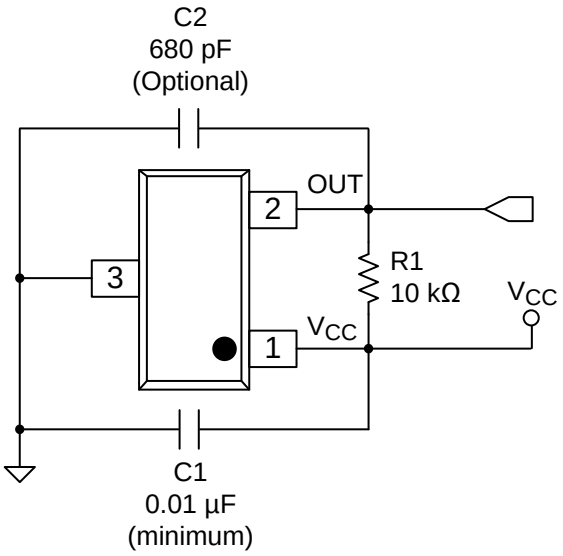

Figure 20. Typical Application Circuit

8.2.1.1 Design Requirements

For this design example, use the parameters listed in Table 2 as the input parameters.

Table 2. Design Parameters

DESIGN PARAMETER	REFERENCE	EXAMPLE VALUE
Supply voltage	V_{CC}	3.2 to 3.4 V
System bandwidth	f_{BW}	10 kHz

8.2.1.2 Detailed Design Procedure

Table 3. External Components

COMPONENT	PIN 1	PIN 2	RECOMMENDED
C1	V_{CC}	GND	A 0.01-µF (minimum) ceramic capacitor rated for V_{CC}
C2	OUT	GND	**Optional**: Place a ceramic capacitor to GND
R1	OUT	REF(1)	Requires a resistor pullup

(1) REF is not a pin on the DRV5023-Q1 device, but a REF supply-voltage pullup is required for the OUT pin; the OUT pin may be pulled up to V_{CC}.

Copyright © 2014–2017, Texas Instruments Incorporated

8.2.1.2.1 Configuration Example

In a 3.3-V system, 3.2 V ≤ V_{ref} ≤ 3.4 V. Use Equation 3 to calculate the allowable range for R1.

$$\frac{V_{ref}\ \max}{30\ \text{mA}} \le R1 \le \frac{V_{ref}\ \min}{100\ \mu\text{A}} \tag{3}$$

For this design example, use Equation 4 to calculate the allowable range of R1.

$$\frac{3.4\ \text{V}}{30\ \text{mA}} \le R1 \le \frac{3.2\ \text{V}}{100\ \mu\text{A}} \tag{4}$$

Therefore:

$$113\ \Omega \le R1 \le 32\ \text{k}\Omega \tag{5}$$

After finding the allowable range of R1 (Equation 5), select a value between 500 Ω and 32 kΩ for R1.

Assuming a system bandwidth of 10 kHz, use Equation 6 to calculate the value of C2.

$$2 \times f_{BW}\ (\text{Hz}) < \frac{1}{2\pi \times R1 \times C2} \tag{6}$$

For this design example, use Equation 7 to calculate the value of C2.

$$2 \times 10\ \text{kHz} < \frac{1}{2\pi \times R1 \times C2} \tag{7}$$

An R1 value of 10 kΩ and a C2 value less than 820 pF satisfy the requirement for a 10-kHz system bandwidth.

A selection of R1 = 10 kΩ and C2 = 680 pF would cause a low-pass filter with a corner frequency of 23.4 kHz.

8.2.1.3 Application Curves

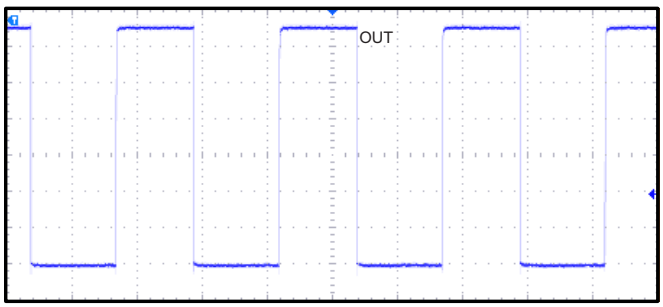

R1 = 10-kΩ pullup No C2

Figure 21. 10-kHz Switching Magnetic Field

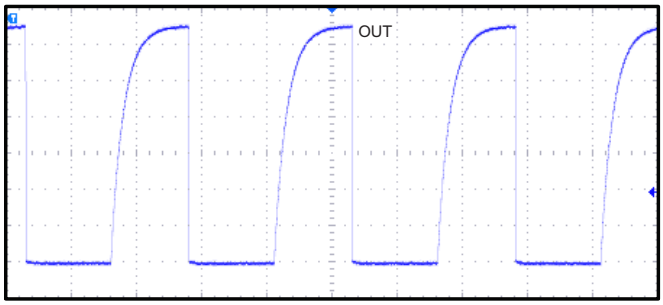

R1 = 10-kΩ pullup C2 = 680 pF

Figure 22. 10-kHz Switching Magnetic Field

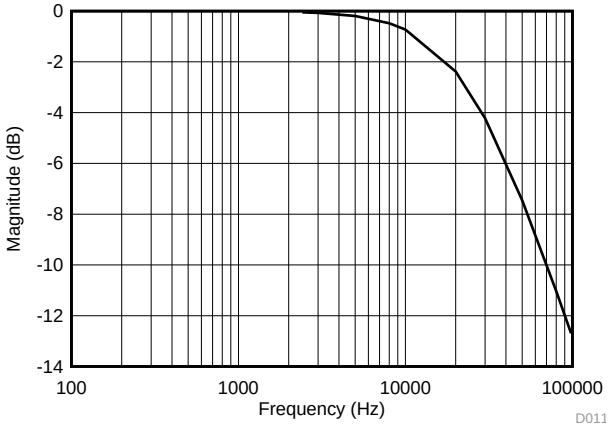

R1 = 10-kΩ pullup C2 = 680 pF

Figure 23. Low-Pass Filtering

8.2.2 Alternative Two-Wire Application

For systems that require minimal wire count, the device output can be connected to V_{CC} through a resistor, and the total supplied current can be sensed near the controller.

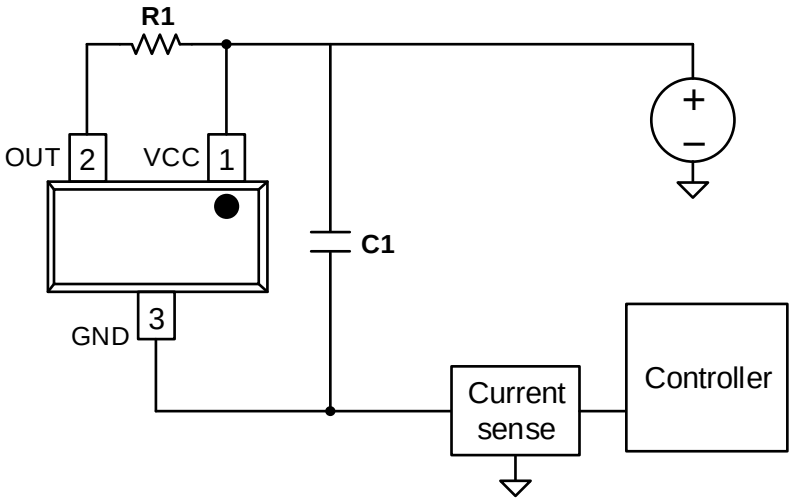

Figure 24. 2-Wire Application

Current can be sensed using a shunt resistor or other circuitry.

8.2.2.1 Design Requirements

Table 4 lists the related design parameters.

Table 4. Design Parameters

DESIGN PARAMETER	REFERENCE	EXAMPLE VALUE
Supply voltage	V_{CC}	12 V
OUT resistor	R1	1 kΩ
Bypass capacitor	C1	0.1 µF
Current when B < B_{RP}	$I_{RELEASE}$	About 3 mA
Current when B > B_{OP}	$I_{OPERATE}$	About 15 mA

8.2.2.2 Detailed Design Procedure

When the open-drain output of the device is high-impedance, current through the path equals the I_{CC} of the device (approximately 3 mA).

When the output pulls low, a parallel current path is added, equal to V_{CC} / (R1 + $r_{DS(on)}$). Using 12 V and 1 kΩ, the parallel current is approximately 12 mA, making the total current approximately 15 mA.

The local bypass capacitor C1 should be at least 0.1 µF, and a larger value if there is high inductance in the power line interconnect.

9 Power Supply Recommendations

The DRV5023-Q1 device is designed to operate from an input voltage supply (VM) range between 2.7 and 38 V. A 0.01-µF (minimum) ceramic capacitor rated for V_{CC} must be placed as close to the DRV5023-Q1 device as possible.

Copyright © 2014–2017, Texas Instruments Incorporated

10 Layout

10.1 Layout Guidelines

The bypass capacitor should be placed near the DRV5023-Q1 device for efficient power delivery with minimal inductance. The external pullup resistor should be placed near the microcontroller input to provide the most stable voltage at the input; alternatively, an integrated pullup resistor within the GPIO of the microcontroller can be used.

Generally, using PCB copper planes underneath the DRV5023-Q1 device has no effect on magnetic flux, and does not interfere with device performance. This is because copper is not a ferromagnetic material. However, If nearby system components contain iron or nickel, they may redirect magnetic flux in unpredictable ways.

10.2 Layout Example

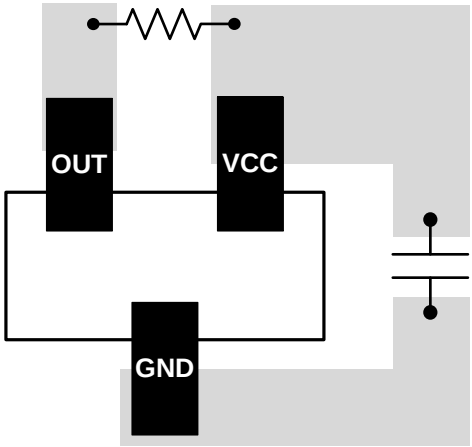

Figure 25. DRV5023-Q1 Layout Example

11 Device and Documentation Support

11.1 Device Support

11.1.1 Device Nomenclature

Figure 26 shows a legend for reading the complete device name for and DRV5023-Q1 device.

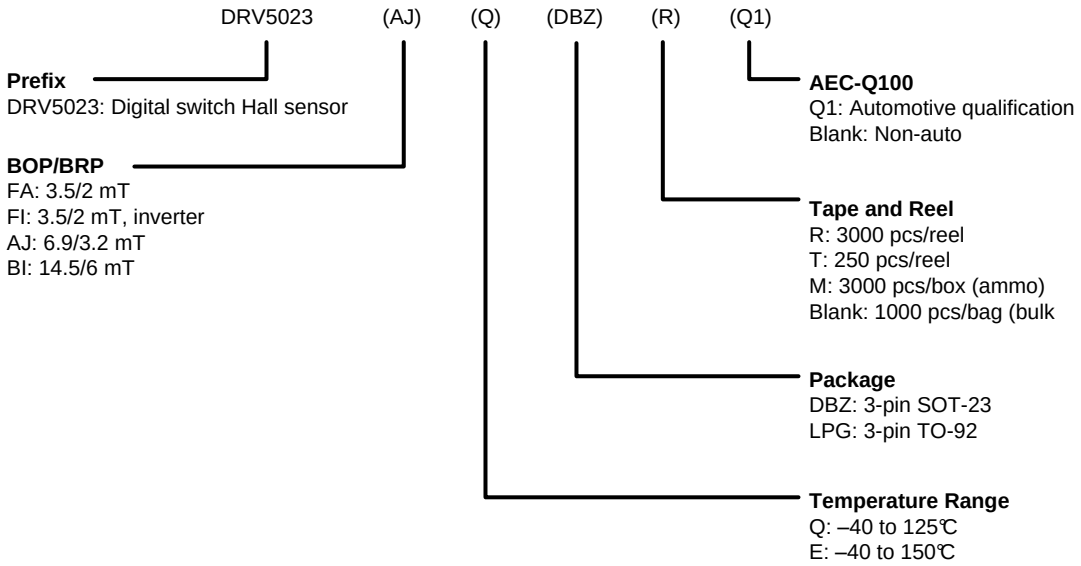

Figure 26. Device Nomenclature

11.1.2 Device Markings

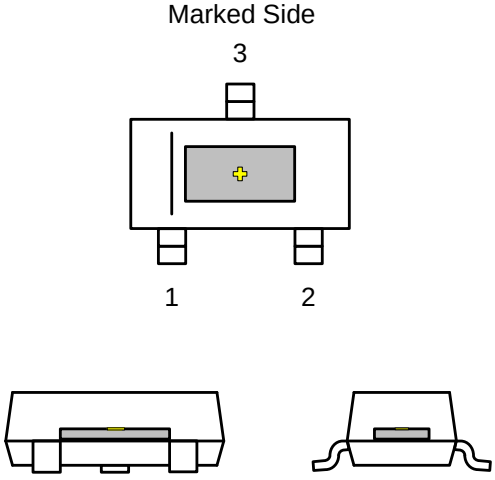

Figure 27. SOT-23 (DBZ) Package

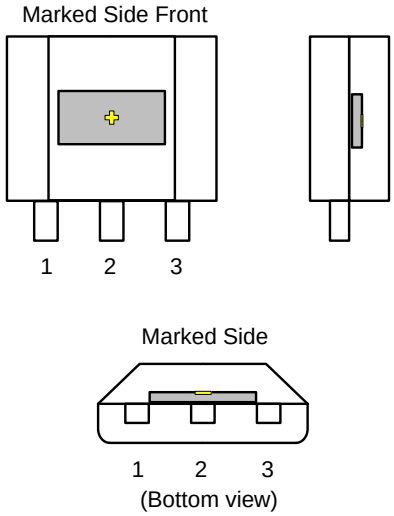

Figure 28. TO-92 (LPG) Package

✚ indicates the Hall effect sensor (not to scale). The Hall element is located in the center of the package with a tolerance of ±100 µm. The height of the Hall element from the bottom of the package is 0.7 mm ±50 µm in the DBZ package and 0.987 mm ±50 µm in the LPG package.

Copyright © 2014–2017, Texas Instruments Incorporated

11.2 Documentation Support

11.2.1 Related Documentation

For related documentation see the following:

Understanding & Applying Hall Effect Sensor Datasheets

11.3 Receiving Notification of Documentation Updates

To receive notification of documentation updates, navigate to the device product folder on ti.com. In the upper right corner, click on *Alert me* to register and receive a weekly digest of any product information that has changed. For change details, review the revision history included in any revised document.

11.4 Community Resources

The following links connect to TI community resources. Linked contents are provided "AS IS" by the respective contributors. They do not constitute TI specifications and do not necessarily reflect TI's views; see TI's Terms of Use.

TI E2E™ Online Community ***TI's Engineer-to-Engineer (E2E) Community.*** Created to foster collaboration among engineers. At e2e.ti.com, you can ask questions, share knowledge, explore ideas and help solve problems with fellow engineers.

Design Support ***TI's Design Support*** Quickly find helpful E2E forums along with design support tools and contact information for technical support.

11.5 Trademarks

E2E is a trademark of Texas Instruments.
All other trademarks are the property of their respective owners.

11.6 Electrostatic Discharge Caution

These devices have limited built-in ESD protection. The leads should be shorted together or the device placed in conductive foam during storage or handling to prevent electrostatic damage to the MOS gates.

11.7 Glossary

SLYZ022 — *TI Glossary*.

This glossary lists and explains terms, acronyms, and definitions.

12 Mechanical, Packaging, and Orderable Information

The following pages include mechanical, packaging, and orderable information. This information is the most current data available for the designated devices. This data is subject to change without notice and revision of this document. For browser-based versions of this data sheet, refer to the left-hand navigation.

PACKAGING INFORMATION

Orderable part number	Status (1)	Material type (2)	Package | Pins	Package qty | Carrier	RoHS (3)	Lead finish/ Ball material (4)	MSL rating/ Peak reflow (5)	Op temp (°C)	Part marking (6)
DRV5023AJEDBZRQ1	Active	Production	SOT-23 (DBZ) | 3	3000 | LARGE T&R	Yes	NIPDAUAG	Level-1-260C-UNLIM	-40 to 150	+PJAJ
DRV5023AJEDBZRQ1.A	Active	Production	SOT-23 (DBZ) | 3	3000 | LARGE T&R	Yes	NIPDAUAG	Level-1-260C-UNLIM	-40 to 150	+PJAJ
DRV5023AJEDBZTQ1	Obsolete	Production	SOT-23 (DBZ) | 3	-	-	Call TI	Call TI	-40 to 150	+PJAJ
DRV5023AJELPGMQ1	Active	Production	TO-92 (LPG) | 3	3000 | AMMO	Yes	SN	N/A for Pkg Type	-40 to 150	+PJAJ
DRV5023AJELPGMQ1.A	Active	Production	TO-92 (LPG) | 3	3000 | AMMO	Yes	SN	N/A for Pkg Type	-40 to 150	+PJAJ
DRV5023AJELPGQ1	Active	Production	TO-92 (LPG) | 3	1000 | BULK	Yes	SN	N/A for Pkg Type	-40 to 150	+PJAJ
DRV5023AJELPGQ1.A	Active	Production	TO-92 (LPG) | 3	1000 | BULK	Yes	SN	N/A for Pkg Type	-40 to 150	+PJAJ
DRV5023AJQDBZRQ1	Active	Production	SOT-23 (DBZ) | 3	3000 | LARGE T&R	Yes	NIPDAUAG	Level-1-260C-UNLIM	-40 to 125	+PKAJ
DRV5023AJQDBZRQ1.A	Active	Production	SOT-23 (DBZ) | 3	3000 | LARGE T&R	Yes	NIPDAUAG	Level-1-260C-UNLIM	-40 to 125	+PKAJ
DRV5023AJQDBZTQ1	Obsolete	Production	SOT-23 (DBZ) | 3	-	-	Call TI	Call TI	-40 to 125	+PKAJ
DRV5023AJQLPGMQ1	Active	Production	TO-92 (LPG) | 3	3000 | AMMO	Yes	SN	N/A for Pkg Type	-40 to 125	+PKAJ
DRV5023AJQLPGMQ1.A	Active	Production	TO-92 (LPG) | 3	3000 | AMMO	Yes	SN	N/A for Pkg Type	-40 to 125	+PKAJ
DRV5023AJQLPGQ1	Active	Production	TO-92 (LPG) | 3	1000 | BULK	Yes	SN	N/A for Pkg Type	-40 to 125	+PKAJ
DRV5023AJQLPGQ1.A	Active	Production	TO-92 (LPG) | 3	1000 | BULK	Yes	SN	N/A for Pkg Type	-40 to 125	+PKAJ
DRV5023BIEDBZRQ1	Active	Production	SOT-23 (DBZ) | 3	3000 | LARGE T&R	Yes	NIPDAUAG	Level-1-260C-UNLIM	-40 to 150	+PJBI
DRV5023BIEDBZRQ1.A	Active	Production	SOT-23 (DBZ) | 3	3000 | LARGE T&R	Yes	NIPDAUAG	Level-1-260C-UNLIM	-40 to 150	+PJBI
DRV5023BIEDBZTQ1	Obsolete	Production	SOT-23 (DBZ) | 3	-	-	Call TI	Call TI	-40 to 150	+PJBI
DRV5023BIELPGMQ1	Active	Production	TO-92 (LPG) | 3	3000 | AMMO	Yes	SN	N/A for Pkg Type	-40 to 150	+PJBI
DRV5023BIELPGMQ1.A	Active	Production	TO-92 (LPG) | 3	3000 | AMMO	Yes	SN	N/A for Pkg Type	-40 to 150	+PJBI
DRV5023BIELPGQ1	Active	Production	TO-92 (LPG) | 3	1000 | BULK	Yes	SN	N/A for Pkg Type	-40 to 150	+PJBI
DRV5023BIELPGQ1.A	Active	Production	TO-92 (LPG) | 3	1000 | BULK	Yes	SN	N/A for Pkg Type	-40 to 150	+PJBI
DRV5023BIQDBZRQ1	Active	Production	SOT-23 (DBZ) | 3	3000 | LARGE T&R	Yes	NIPDAUAG	Level-1-260C-UNLIM	-40 to 125	+PKBI
DRV5023BIQDBZRQ1.A	Active	Production	SOT-23 (DBZ) | 3	3000 | LARGE T&R	Yes	NIPDAUAG	Level-1-260C-UNLIM	-40 to 125	+PKBI
DRV5023BIQDBZTQ1	Obsolete	Production	SOT-23 (DBZ) | 3	-	-	Call TI	Call TI	-40 to 125	+PKBI
DRV5023BIQLPGMQ1	Active	Production	TO-92 (LPG) | 3	3000 | AMMO	Yes	SN	N/A for Pkg Type	-40 to 125	+PKBI
DRV5023BIQLPGMQ1.A	Active	Production	TO-92 (LPG) | 3	3000 | AMMO	Yes	SN	N/A for Pkg Type	-40 to 125	+PKBI
DRV5023BIQLPGQ1	Active	Production	TO-92 (LPG) | 3	1000 | BULK	Yes	SN	N/A for Pkg Type	-40 to 125	+PKBI
DRV5023BIQLPGQ1.A	Active	Production	TO-92 (LPG) | 3	1000 | BULK	Yes	SN	N/A for Pkg Type	-40 to 125	+PKBI
DRV5023FAEDBZRQ1	Active	Production	SOT-23 (DBZ) | 3	3000 | LARGE T&R	Yes	SN	Level-1-260C-UNLIM	-40 to 150	+PJFA

Orderable part number	Status (1)	Material type (2)	Package | Pins	Package qty | Carrier	RoHS (3)	Lead finish/ Ball material (4)	MSL rating/ Peak reflow (5)	Op temp (°C)	Part marking (6)
DRV5023FAEDBZRQ1.A	Active	Production	SOT-23 (DBZ) | 3	3000 | LARGE T&R	Yes	SN	Level-1-260C-UNLIM	-40 to 150	+PJFA
DRV5023FIEDBZRQ1	Active	Production	SOT-23 (DBZ) | 3	3000 | LARGE T&R	Yes	SN	Level-1-260C-UNLIM	-40 to 150	+PJFI
DRV5023FIEDBZRQ1.A	Active	Production	SOT-23 (DBZ) | 3	3000 | LARGE T&R	Yes	SN	Level-1-260C-UNLIM	-40 to 150	+PJFI

(1) **Status:** For more details on status, see our product life cycle.

(2) **Material type:** When designated, preproduction parts are prototypes/experimental devices, and are not yet approved or released for full production. Testing and final process, including without limitation quality assurance, reliability performance testing, and/or process qualification, may not yet be complete, and this item is subject to further changes or possible discontinuation. If available for ordering, purchases will be subject to an additional waiver at checkout, and are intended for early internal evaluation purposes only. These items are sold without warranties of any kind.

(3) **RoHS values:** Yes, No, RoHS Exempt. See the TI RoHS Statement for additional information and value definition.

(4) **Lead finish/Ball material:** Parts may have multiple material finish options. Finish options are separated by a vertical ruled line. Lead finish/Ball material values may wrap to two lines if the finish value exceeds the maximum column width.

(5) **MSL rating/Peak reflow:** The moisture sensitivity level ratings and peak solder (reflow) temperatures. In the event that a part has multiple moisture sensitivity ratings, only the lowest level per JEDEC standards is shown. Refer to the shipping label for the actual reflow temperature that will be used to mount the part to the printed circuit board.

(6) **Part marking:** There may be an additional marking, which relates to the logo, the lot trace code information, or the environmental category of the part.

Multiple part markings will be inside parentheses. Only one part marking contained in parentheses and separated by a "~" will appear on a part. If a line is indented then it is a continuation of the previous line and the two combined represent the entire part marking for that device.

Important Information and Disclaimer: The information provided on this page represents TI's knowledge and belief as of the date that it is provided. TI bases its knowledge and belief on information provided by third parties, and makes no representation or warranty as to the accuracy of such information. Efforts are underway to better integrate information from third parties. TI has taken and continues to take reasonable steps to provide representative and accurate information but may not have conducted destructive testing or chemical analysis on incoming materials and chemicals. TI and TI suppliers consider certain information to be proprietary, and thus CAS numbers and other limited information may not be available for release.

In no event shall TI's liability arising out of such information exceed the total purchase price of the TI part(s) at issue in this document sold by TI to Customer on an annual basis.

OTHER QUALIFIED VERSIONS OF DRV5023-Q1 :

- Catalog : DRV5023

NOTE: Qualified Version Definitions:

- Catalog - TI's standard catalog product

TAPE AND REEL INFORMATION

REEL DIMENSIONS

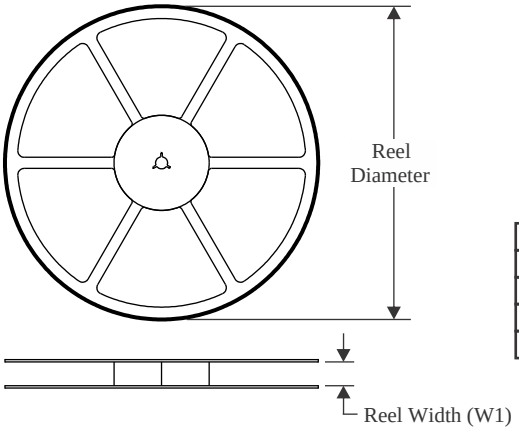

TAPE DIMENSIONS

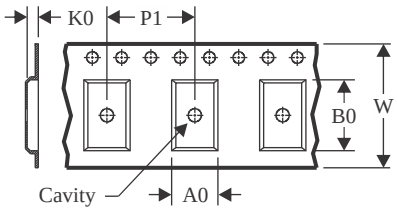

A0	Dimension designed to accommodate the component width
B0	Dimension designed to accommodate the component length
K0	Dimension designed to accommodate the component thickness
W	Overall width of the carrier tape
P1	Pitch between successive cavity centers

QUADRANT ASSIGNMENTS FOR PIN 1 ORIENTATION IN TAPE

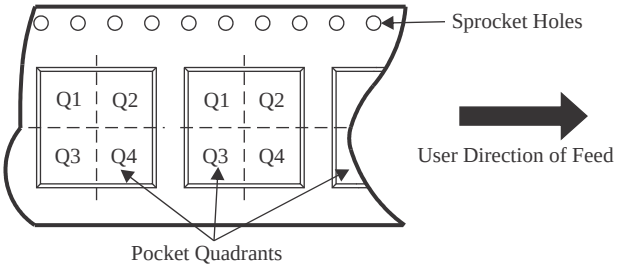

*All dimensions are nominal

Device	Package Type	Package Drawing	Pins	SPQ	Reel Diameter (mm)	Reel Width W1 (mm)	A0 (mm)	B0 (mm)	K0 (mm)	P1 (mm)	W (mm)	Pin1 Quadrant
DRV5023AJEDBZRQ1	SOT-23	DBZ	3	3000	180.0	8.4	3.15	2.77	1.22	4.0	8.0	Q3
DRV5023AJQDBZRQ1	SOT-23	DBZ	3	3000	180.0	8.4	3.15	2.77	1.22	4.0	8.0	Q3
DRV5023BIEDBZRQ1	SOT-23	DBZ	3	3000	180.0	8.4	3.15	2.77	1.22	4.0	8.0	Q3
DRV5023BIQDBZRQ1	SOT-23	DBZ	3	3000	180.0	8.4	3.15	2.77	1.22	4.0	8.0	Q3
DRV5023FAEDBZRQ1	SOT-23	DBZ	3	3000	180.0	8.4	3.15	2.77	1.22	4.0	8.0	Q3
DRV5023FIEDBZRQ1	SOT-23	DBZ	3	3000	180.0	8.4	3.15	2.77	1.22	4.0	8.0	Q3

TAPE AND REEL BOX DIMENSIONS

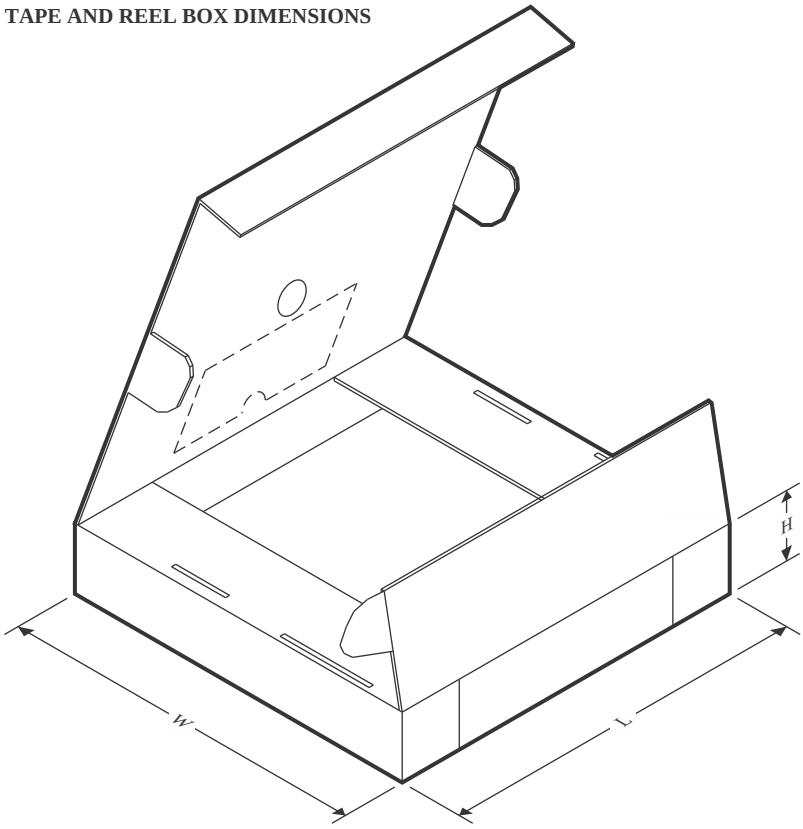

*All dimensions are nominal

Device	Package Type	Package Drawing	Pins	SPQ	Length (mm)	Width (mm)	Height (mm)
DRV5023AJEDBZRQ1	SOT-23	DBZ	3	3000	202.0	201.0	28.0
DRV5023AJQDBZRQ1	SOT-23	DBZ	3	3000	202.0	201.0	28.0
DRV5023BIEDBZRQ1	SOT-23	DBZ	3	3000	202.0	201.0	28.0
DRV5023BIQDBZRQ1	SOT-23	DBZ	3	3000	202.0	201.0	28.0
DRV5023FAEDBZRQ1	SOT-23	DBZ	3	3000	202.0	201.0	28.0
DRV5023FIEDBZRQ1	SOT-23	DBZ	3	3000	202.0	201.0	28.0

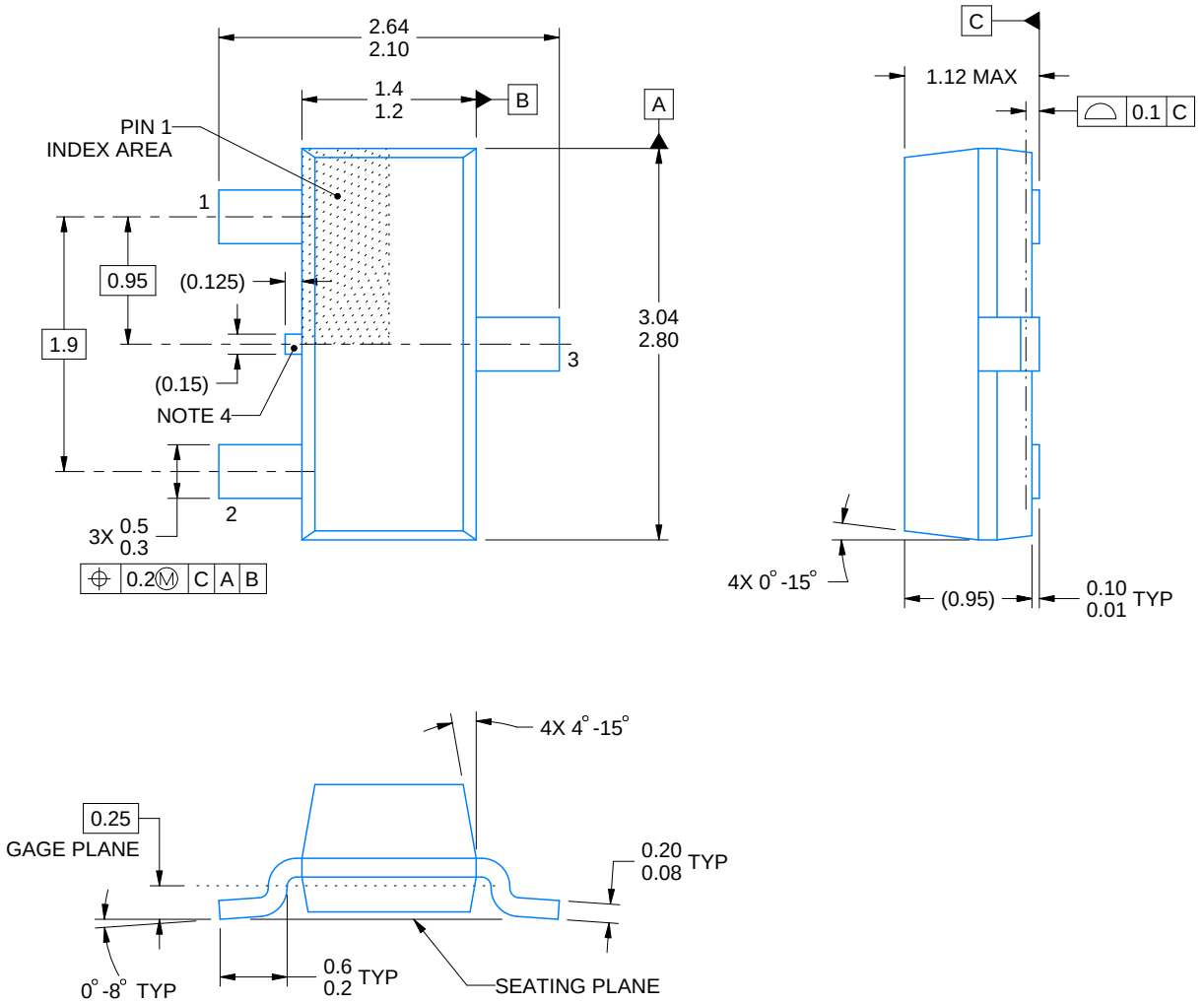

4214838/F 08/2024

NOTES:

1. All linear dimensions are in millimeters. Any dimensions in parenthesis are for reference only. Dimensioning and tolerancing per ASME Y14.5M.
2. This drawing is subject to change without notice.
3. Reference JEDEC registration TO-236, except minimum foot length.
4. Support pin may differ or may not be present.
5. Body dimensions do not include mold flash, protrusions, or gate burrs. Mold flash, protrusions, or gate burrs shall not exceed 0.25mm per side

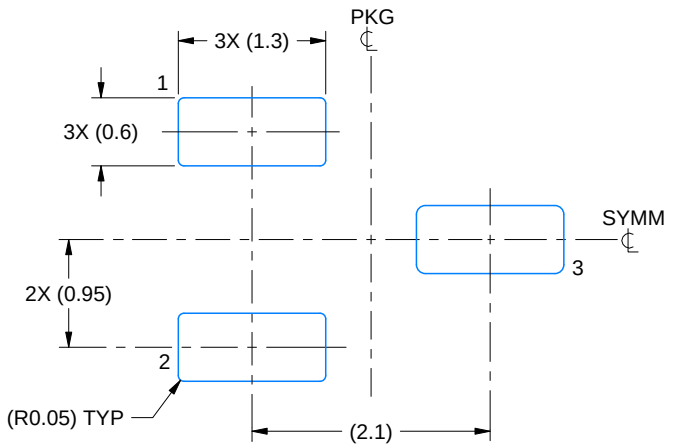

LAND PATTERN EXAMPLE
SCALE:15X

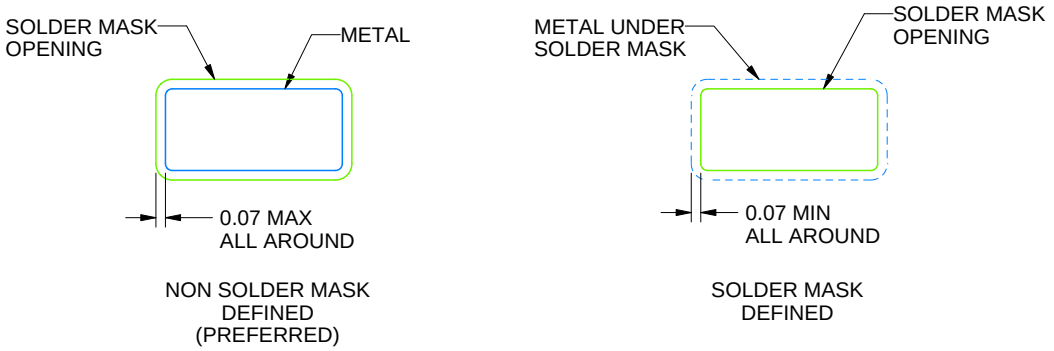

SOLDER MASK DETAILS

4214838/F 08/2024

NOTES: (continued)

5. Publication IPC-7351 may have alternate designs.
6. Solder mask tolerances between and around signal pads can vary based on board fabrication site.

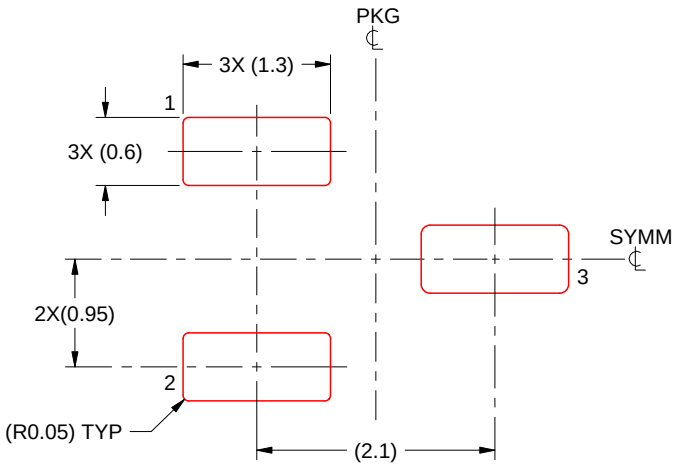

SOLDER PASTE EXAMPLE
BASED ON 0.125 THICK STENCIL
SCALE:15X

4214838/F 08/2024

NOTES: (continued)

7. Laser cutting apertures with trapezoidal walls and rounded corners may offer better paste release. IPC-7525 may have alternate design recommendations.
8. Board assembly site may have different recommendations for stencil design.

PACKAGE OUTLINE

LPG0003A

TO-92 - 5.05 mm max height

TRANSISTOR OUTLINE

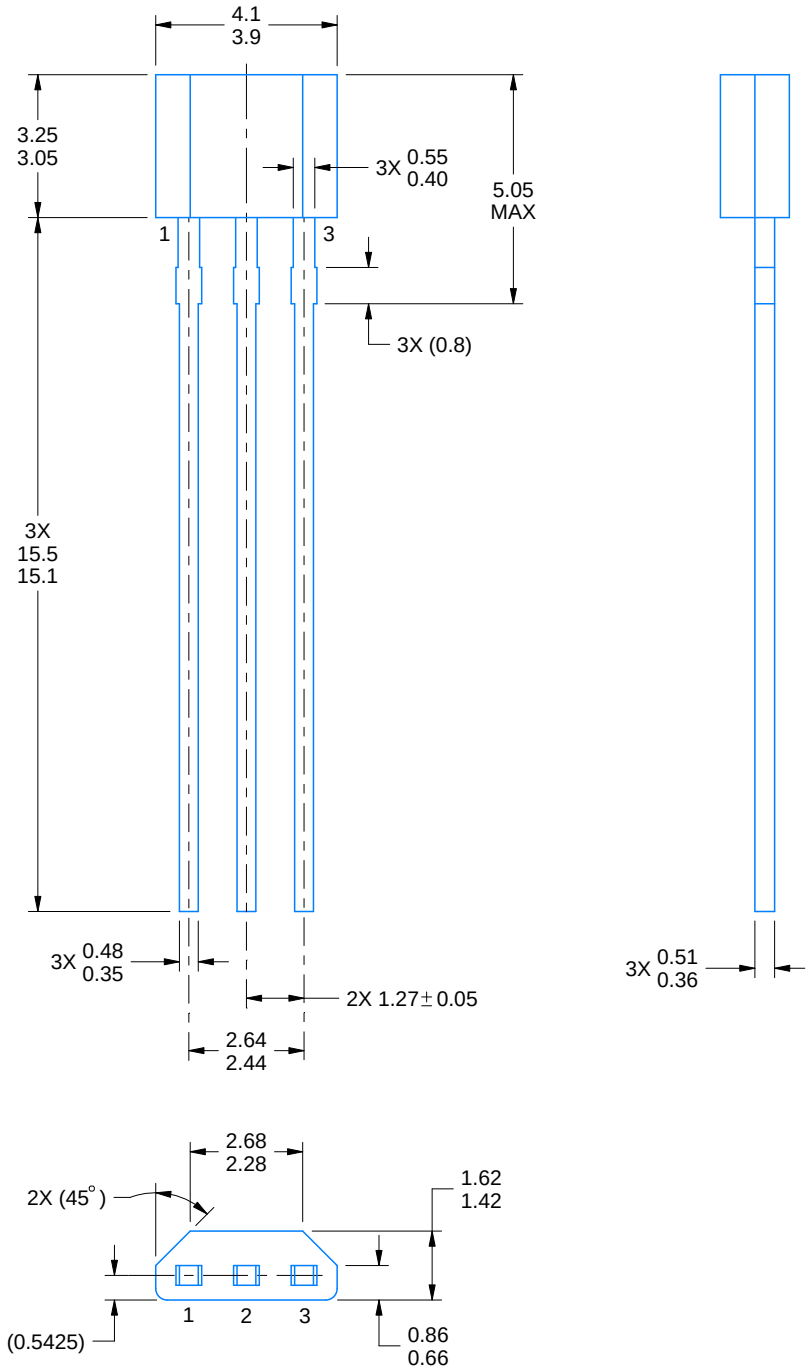

4221343/C 01/2018

NOTES:

1. All linear dimensions are in millimeters. Any dimensions in parenthesis are for reference only. Dimensioning and tolerancing per ASME Y14.5M.
2. This drawing is subject to change without notice.

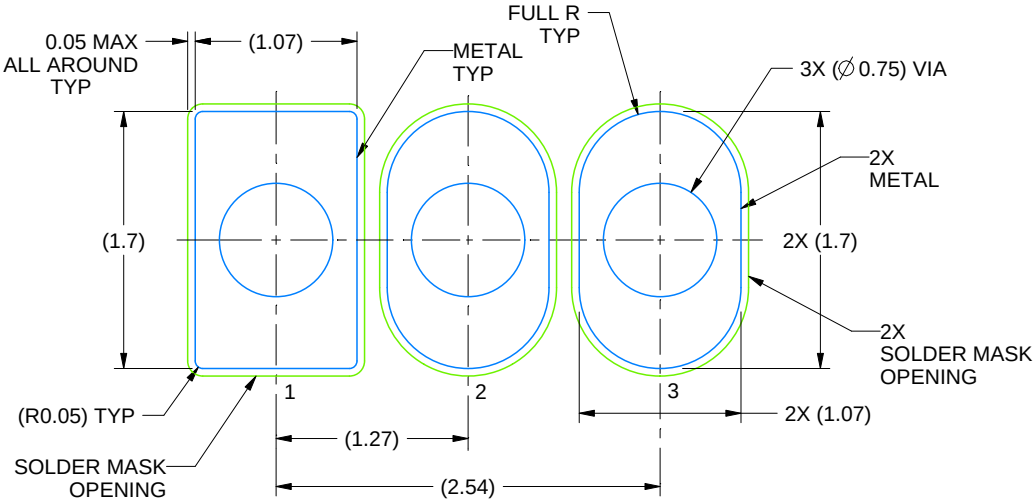

LAND PATTERN EXAMPLE
NON-SOLDER MASK DEFINED
SCALE:20X

4221343/C 01/2018

TRANSISTOR OUTLINE

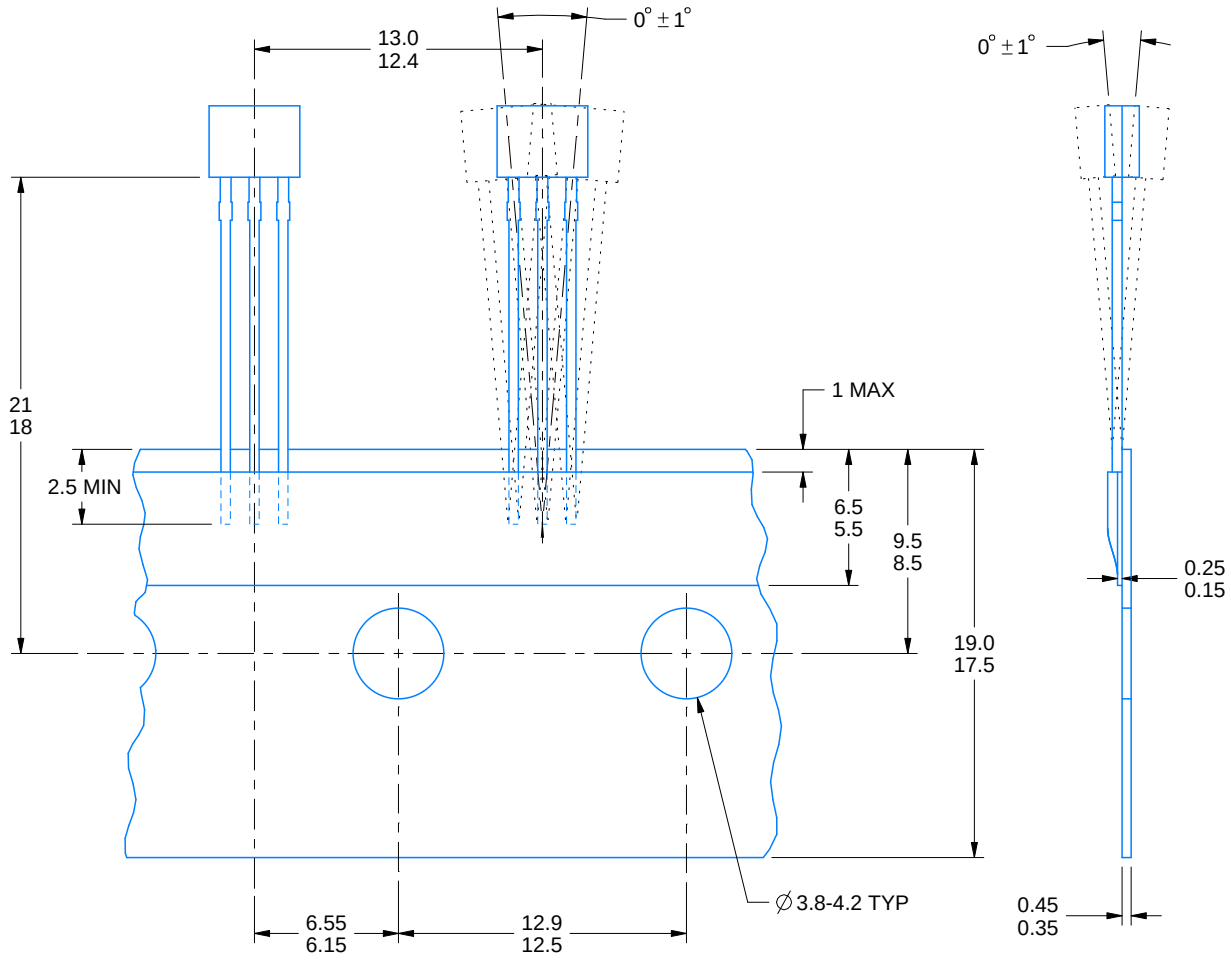

4221343/C 01/2018

IMPORTANT NOTICE AND DISCLAIMER

TI PROVIDES TECHNICAL AND RELIABILITY DATA (INCLUDING DATASHEETS), DESIGN RESOURCES (INCLUDING REFERENCE DESIGNS), APPLICATION OR OTHER DESIGN ADVICE, WEB TOOLS, SAFETY INFORMATION, AND OTHER RESOURCES “AS IS” AND WITH ALL FAULTS, AND DISCLAIMS ALL WARRANTIES, EXPRESS AND IMPLIED, INCLUDING WITHOUT LIMITATION ANY IMPLIED WARRANTIES OF MERCHANTABILITY, FITNESS FOR A PARTICULAR PURPOSE OR NON-INFRINGEMENT OF THIRD PARTY INTELLECTUAL PROPERTY RIGHTS.

These resources are intended for skilled developers designing with TI products. You are solely responsible for (1) selecting the appropriate TI products for your application, (2) designing, validating and testing your application, and (3) ensuring your application meets applicable standards, and any other safety, security, regulatory or other requirements.

These resources are subject to change without notice. TI grants you permission to use these resources only for development of an application that uses the TI products described in the resource. Other reproduction and display of these resources is prohibited. No license is granted to any other TI intellectual property right or to any third party intellectual property right. TI disclaims responsibility for, and you fully indemnify TI and its representatives against any claims, damages, costs, losses, and liabilities arising out of your use of these resources.

TI’s products are provided subject to TI’s Terms of Sale, TI’s General Quality Guidelines, or other applicable terms available either on ti.com or provided in conjunction with such TI products. TI’s provision of these resources does not expand or otherwise alter TI’s applicable warranties or warranty disclaimers for TI products. Unless TI explicitly designates a product as custom or customer-specified, TI products are standard, catalog, general purpose devices.

TI objects to and rejects any additional or different terms you may propose.

Copyright © 2025, Texas Instruments Incorporated

Last updated 10/2025