Data Sheet

Tag-it™ HF Transponder Inlay Rectangle - Large

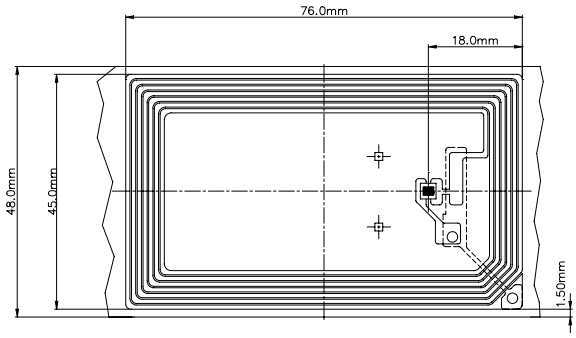

Specifications:

Part Number	*RI-I02-110A*
Recommended Operating frequency	13.56 MHz
Passive Resonance Frequency (at +25°C)	14.36 MHz ± 200kHz (includes frequency offset to compensate further integration into paper; drops down to operating frequency when exposed to activation field strength)
Typical activation field strength read (at +25°C)	100 dBμA/m
Typical activation field strength write (at +25°C)	105 dBμA/m
Factory programmed Read Only Number	32 bits
Memory (user programmable)	256 bits organized in 8 x 32-bit blocks
Typical programming cycles (at +25°C)	100,000
Data retention time (at +55°C)	> 10 years
Simultaneous Identification of Tags	Up to 50 tags per second (reader/antenna dependant)
Uplink / downlink data rates	26.7 kBd / 6.2 and 9 kBd
RX modulation	Pulse-width coded, AM 100% modulation
TX frequencies	Manchester encoded, A = f_c ± 423.75 kHz, B = f_c ± 484.29 kHz Low bit: transition A to B. High bit: transition B to A
Antenna size	45 mm x 76 mm (~1.77 in x ~2.99 in)
Foil width	48 mm ± 0.5 mm (1.89 in ± 0.02 in)
Foil pitch	96 mm +0.1mm/-0.4mm (~3.78 in)
Thickness	Chip area: 0.355mm (~0.014 in) Antenna area: 0.085mm (~0.0033 in)
Base material	Substrate: PET (Polyethylenetherephtalate) Antenna: Aluminum
Smallest bending radius allowed	18 mm (~0.71 in)
Operating temperature	-25°C to +70°C
Storage temperature (single inlay)	-40°C to +85°C (warpage may occur with increasing temperature)
Storage temperature (on reel)	-40°C to +40°C
Delivery	Single row tape wound on cardboard reel with 500 mm diameter Reel width: approx. 60 mm (~2.36 in); inside 50 mm (~1.97 in) Hub diameter: 76.2 mm (3 in)
Typical quantity per reel	5,000

For more information, contact the sales office or distributor nearest you. This contact information can be found on our web site at: **http://www.ti-rfid.com**

Texas Instruments reserves the right to change its products and services at any time without notice. TI provides customer assistance in various technical areas, but does not have full access to data concerning the uses and applications of customers products. Therefore, TI assumes no responsibility for customer product design or for infringement of patents and/or the rights of third parties, which may result from assistance provided by TI.

© Copyright 2005 Texas Instruments Incorporated.

11-09-22-090 02/05
SCBS860