TL4050 Precision Micropower Shunt Voltage Reference

1 Features

- Fixed output voltages of 2.5V, 4.096V, 5V, and 10V
- Tight output tolerances and low temperature coefficient
  - Max 0.1%, 50ppm/°C – A Grade
  - Max 0.2%, 50ppm/°C – B Grade
  - Max 0.5%, 50ppm/°C – C Grade
- Low output noise: 41μV_{RMS} typical
- Wide operating current range: 60μA typical to 15mA
- Stable with all capacitive loads; No output capacitor required
- Available in extended temperature range: –40°C to 125°C

2 Applications

- Data-acquisition systems
- Power supplies and power-supply monitors
- Instrumentation and test equipment
- Process controls
- Precision audio
- Automotive electronics
- Energy management
- Battery-powered equipment

3 Description

The TL4050 series of shunt voltage references are versatile easy-to-use references designed for a wide array of applications. The two-terminal fixed-output device requires no external capacitors for operation and is stable with all capacitive loads. Additionally, the reference offers low dynamic impedance, low noise, and low temperature coefficient to maintain a stable output voltage over a wide range of operating currents and temperatures.

The TL4050 is offered in three initial tolerances, ranging from 0.1% (maximum) for the A grade to 0.5% (maximum) for the C grade. Thus, a great deal of flexibility is offered to designers in choosing the best cost-to-performance ratio for any application. Packaged in the space-saving SOT-23-3 and SC-70 packages and requiring a minimum current of 45μA (typical), the TL4050 also is an excellent choice for portable applications.

The TL4050xI is characterized for operation over an ambient temperature range of –40°C to 85°C. The TL4050xQ is characterized for operation over an ambient temperature range of –40°C to 125°C.

An IMPORTANT NOTICE at the end of this data sheet addresses availability, warranty, changes, use in safety-critical applications, intellectual property matters and other important disclaimers. PRODUCTION DATA.

Table of Contents

1 Features....1
2 Applications....1
3 Description....1
4 Pin Configuration and Functions....3
5 Specifications....4
5.1 Absolute Maximum Ratings [1]....4
5.2 ESD Ratings....4
5.3 Recommended Operating Conditions....4
5.4 TL4050x25I Electrical Characteristics....5
5.5 TL4050x25Q Electrical Characteristics....6
5.6 TL4050x41I Electrical Characteristics....7
5.7 TL4050x41Q Electrical Characteristics....8
5.8 TL4050x50I Electrical Characteristics....9
5.9 TL4050x50Q Electrical Characteristics....10
5.10 TL4050x10I Electrical Characteristics....11
5.11 TL4050x10Q Electrical Characteristics....12
6 Typical Characteristics....13
7 Detailed Description....15
8 Application Information....16
8.1 Output Capacitor....16
8.2 SOT-23 Pin Connections....16
8.3 Use With an ADC or DAC....16
8.4 Cathode and Load Currents....18
9 Device and Documentation Support....19
9.1 Ordering Information....19
9.2 Receiving Notification of Documentation Updates....21
9.3 Support Resources....21
9.4 Trademarks....22
9.5 Electrostatic Discharge Caution....22
9.6 Glossary....22
10 Revision History....22
11 Mechanical, Packaging, and Orderable Information....23

Copyright © 2025 Texas Instruments Incorporated

4 Pin Configuration and Functions

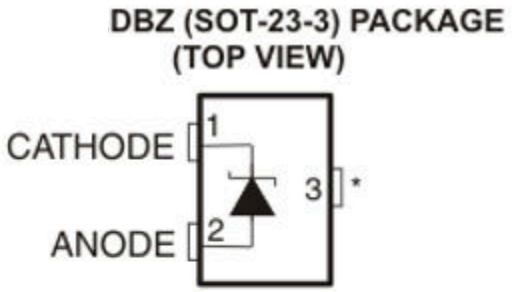

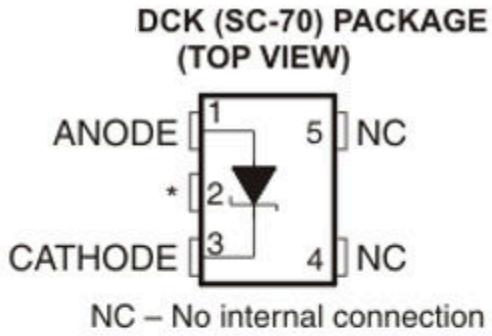

***In applications with high electromagnetic interference (for example, when placed near transformers or other electromagnetic sources) or significant high-frequency switching noise, TI recommends connecting this pin to the anode.**

5 Specifications

5.1 Absolute Maximum Ratings [1]

over free-air temperature range (unless otherwise noted)

			MIN	MAX	UNIT
I_Z	Continuous cathode current		–10	20	mA
θ_{JA}	Package thermal impedance[2] [3]	DBV package		206	°C/W
		DCK package		252	
T_J	Operating virtual junction temperature			150	°C
T_{stg}	Storage temperature range		–65	150	°C

(1) Stresses beyond those listed under *Absolute Maximum Ratings* can cause permanent damage to the device. These are stress ratings only, and functional operation of the device at these or any other conditions beyond those indicated under *Recommended Operating Conditions* is not implied. Exposure to absolute-maximum-rated conditions for extended periods can affect device reliability.
(2) Maximum power dissipation is a function of T_J(max), θ_{JA}, and T_A. The maximum allowable power dissipation at any allowable ambient temperature is $P_D = (T_J(max) – T_A)/\theta_{JA}$. Operating at the absolute maximum T_J of 150°C can affect reliability.
(3) The package thermal impedance is calculated in accordance with JESD 51-7.

5.2 ESD Ratings

			VALUE	UNIT
$V_{(ESD)}$	Electrostatic discharge	Human-body model (HBM), per ANSI/ESDA/JEDEC JS-001[1] [2]	±2000	V
		Charged-device model (CDM), per JEDEC specification JESD22-C101[3]	±500	

(1) JEDEC document JEP155 states that 500V HBM allows safe manufacturing with a standard ESD control process.
(2) The human-body model is a 100pF capacitor discharged through a 1.5kΩ resistor into each pin. All pins are rated at 2kV for human-body model, but the feedback pin which is rated at 1kV.
(3) JEDEC document JEP157 states that 250V CDM allows safe manufacturing with a standard ESD control process. Manufacturing with less than 250V CDM is possible with the necessary precautions.

5.3 Recommended Operating Conditions

			MIN	MAX	UNIT
I_Z	Cathode current		[1]	15	mA
T_A	Free-air temperature	I temperature	–40	85	°C
		Q temperature	–40	125	

(1) See parametric tables

Copyright © 2025 Texas Instruments Incorporated

5.4 TL4050x25I Electrical Characteristics

at industrial temperature range, full range T_A = –40°C to 85°C (unless otherwise noted)

PARAMETER		TEST CONDITIONS	T_A	TL4050A25I			TL4050B25I			TL4050C25I			UNIT
				MIN	TYP	MAX	MIN	TYP	MAX	MIN	TYP	MAX	
V_Z	Reverse breakdown voltage	I_Z = 100µA	25°C		2.5			2.5			2.5		V
ΔV_Z	Reverse breakdown voltage tolerance	I_Z = 100µA	25°C	–2.5		2.5	–5		5	–13		13	mV
			Full range	–11		11	–14		14	–21		21	
$I_{Z,min}$	Minimum cathode current		25°C		41	60		41	60		41	60	µA
			Full range			65			65			65	
α_{VZ}	Average temperature coefficient of reverse breakdown voltage	I_Z = 10mA	25°C		±20			±20			±20		ppm/°C
		I_Z = 1mA	25°C		±15			±15			±15		
		I_Z = 100µA	25°C		±15			±15			±15		
			Full range			±50			±50			±50	
$\frac{\Delta V_Z}{\Delta I_Z}$	Reverse breakdown voltage change with cathode current change	$I_{Z,min} < I_Z < 1mA$	25°C		0.3	0.8		0.3	0.8		0.3	0.8	mV
			Full range			1.2			1.2			1.2	
		1mA < I_Z < 15mA	25°C		2.3	6		2.3	6		2.3	6	
			Full range			8			8			8	
Z_Z	Reverse dynamic impedance	I_Z = 1mA, f = 120Hz, I_{AC} = 0.1 I_Z	25°C		0.3			0.3			0.3		Ω
e_N	Wide band noise	I_Z = 100µA, 10Hz ≤ f ≤ 10kHz	25°C		41			41			41		$µV_{RMS}$
	Long-term stability of reverse breakdown voltage	t = 1000 h, T_A = 25°C ± 0.1°C, I_Z = 100µA			120			120			120		ppm
V_{HYST}	Thermal hysteresis(1)	ΔT_A = –40°C to 125°C			0.7			0.7			0.7		mV

(1) Thermal hysteresis is defined as $V_{Z,25°C}$ (after cycling to –40°C) – $V_{Z,25°C}$ (after cycling to 125°C).

5.5 TL4050x25Q Electrical Characteristics

at extended temperature range, full range T_A = –40°C to 125°C (unless otherwise noted)

PARAMETER		TEST CONDITIONS	T_A	TL4050A25Q			TL4050B25Q			TL4050C25Q			UNIT
				MIN	TYP	MAX	MIN	TYP	MAX	MIN	TYP	MAX	
V_Z	Reverse breakdown voltage	I_Z = 100µA	25°C		2.5			2.5			2.5		V
ΔV_Z	Reverse breakdown voltage tolerance	I_Z = 100µA	25°C	–2.5		2.5	–5		5	–13		13	mV
			Full range	–15		15	–18		18	–25		25	
$I_{Z,min}$	Minimum cathode current		25°C		41	60		41	60		41	60	µA
			Full range			65			65			65	
α_{VZ}	Average temperature coefficient of reverse breakdown voltage	I_Z = 10mA	25°C		±20			±20			±20		ppm/°C
		I_Z = 1mA	25°C		±15			±15			±15		
		I_Z = 100µA	25°C		±15			±15			±15		
			Full range			±50			±50			±50	
$\frac{\Delta V_Z}{\Delta I_Z}$	Reverse breakdown voltage change with cathode current change	$I_{Z,min} < I_Z < 1mA$	25°C		0.3	0.8		0.3	0.8		0.3	0.8	mV
			Full range			1.2			1.2			1.2	
		1mA < I_Z < 15mA	25°C		2.3	6		2.3	6		2.3	6	
			Full range			8			8			8	
Z_Z	Reverse dynamic impedance	I_Z = 1mA, f = 120Hz, I_{AC} = 0.1 I_Z	25°C		0.3			0.3			0.3		Ω
e_N	Wide band noise	I_Z = 100µA, 10Hz ≤ f ≤ 10kHz	25°C		41			41			41		$µV_{RMS}$
	Long-term stability of reverse breakdown voltage	t = 1000 h, T_A = 25°C ± 0.1°C, I_Z = 100µA			120			120			120		ppm
V_{HYST}	Thermal hysteresis(1)	ΔT_A = –40°C to 125°C			0.7			0.7			0.7		mV

(1) Thermal hysteresis is defined as $V_{Z,25°C}$ (after cycling to –40°C) – $V_{Z,25°C}$ (after cycling to 125°C).

Copyright © 2025 Texas Instruments Incorporated

5.6 TL4050x41I Electrical Characteristics

at industrial temperature range, full range T_A = –40°C to 85°C (unless otherwise noted)

PARAMETER		TEST CONDITIONS	T_A	TL4050A41I			TL4050B41I			TL4050C41I			UNIT
				MIN	TYP	MAX	MIN	TYP	MAX	MIN	TYP	MAX	
V_Z	Reverse breakdown voltage	I_Z = 100µA	25°C		4.096			4.096			4.096		V
ΔV_Z	Reverse breakdown voltage tolerance	I_Z = 100µA	25°C	–4.1		4.1	–8.2		8.2	–21		21	mV
			Full range	–18		18	–22		22	–34		34	
$I_{Z,min}$	Minimum cathode current		25°C		52	68		52	68		52	68	µA
			Full range			73			73			73	
α_{VZ}	Average temperature coefficient of reverse breakdown voltage	I_Z = 10mA	25°C		±30			±30			±30		ppm/°C
		I_Z = 1mA	25°C		±20			±20			±20		
		I_Z = 100µA	25°C		±20			±20			±20		
			Full range			±50			±50			±50	
$\frac{\Delta V_Z}{\Delta I_Z}$	Reverse breakdown voltage change with cathode current change	$I_{Z,min} < I_Z < 1mA$	25°C		0.2	0.9		0.2	0.9		0.2	0.9	mV
			Full range			1.2			1.2			1.2	
		1mA < I_Z < 15mA	25°C		2	7		2	7		2	7	
			Full range			10			10			10	
Z_Z	Reverse dynamic impedance	I_Z = 1mA, f = 120Hz, I_{AC} = 0.1 I_Z	25°C		0.5			0.5			0.5		Ω
e_N	Wide band noise	I_Z = 100µA, 10Hz ≤ f ≤10 kHz	25°C		93			93			93		$µV_{RMS}$
	Long-term stability of reverse breakdown voltage	t = 1000 h, T_A = 25°C ± 0.1°C, I_Z = 100µA			120			120			120		ppm
V_{HYST}	Thermal hysteresis(1)	ΔT_A = –40°C to 125°C			1.148			1.148			1.148		mV

(1) Thermal hysteresis is defined as $V_{Z,25°C}$ (after cycling to –40°C) – $V_{Z,25°C}$ (after cycling to 125°C).

5.7 TL4050x41Q Electrical Characteristics

at extended temperature range, full range T_A = –40°C to 125°C (unless otherwise noted)

PARAMETER		TEST CONDITIONS	T_A	TL4050A41Q			TL4050B41Q			TL4050C41Q			UNIT
				MIN	TYP	MAX	MIN	TYP	MAX	MIN	TYP	MAX	
V_Z	Reverse breakdown voltage	I_Z = 100µA	25°C		4.096			4.096			4.096		V
ΔV_Z	Reverse breakdown voltage tolerance	I_Z = 100µA	25°C	–4.1		4.1	–8.2		8.2	–21		21	mV
			Full range	–25		25	–29		29	–41		41	
$I_{Z,min}$	Minimum cathode current		25°C		52	68		52	68		52	68	µA
			Full range			78			78			78	
α_{VZ}	Average temperature coefficient of reverse breakdown voltage	I_Z = 10mA	25°C		±30			±30			±30		ppm/°C
		I_Z = 1mA	25°C		±20			±20			±20		
		I_Z = 100µA	25°C		±20			±20			±20		
			Full range			±50			±50			±50	
$\frac{\Delta V_Z}{\Delta I_Z}$	Reverse breakdown voltage change with cathode current change	$I_{Z,min} < I_Z < 1mA$	25°C		0.2	0.9		0.2	0.9		0.2	0.9	mV
			Full range			1.2			1.2			1.2	
		1mA < I_Z < 15mA	25°C		2	7		2	7		2	7	
			Full range			10			10			10	
Z_Z	Reverse dynamic impedance	I_Z = 1mA, f = 120Hz, I_{AC} = 0.1 I_Z	25°C		0.5			0.5			0.5		Ω
e_N	Wide band noise	I_Z = 100µA, 10Hz ≤ f ≤10 kHz	25°C		93			93			93		$µV_{RMS}$
	Long-term stability of reverse breakdown voltage	t = 1000 h, T_A = 25°C ± 0.1°C, I_Z = 100µA			120			120			120		ppm
V_{HYST}	Thermal hysteresis(1)	ΔT_A = –40°C to 125°C			1.148			1.148			1.148		mV

(1) Thermal hysteresis is defined as $V_{Z,25°C}$ (after cycling to –40°C) – $V_{Z,25°C}$ (after cycling to 125°C).

Copyright © 2025 Texas Instruments Incorporated

5.8 TL4050x50I Electrical Characteristics

at industrial temperature range, full range T_A = –40°C to 85°C (unless otherwise noted)

PARAMETER		TEST CONDITIONS	T_A	TL4050A50I			TL4050B50I			TL4050C50I			UNIT
				MIN	TYP	MAX	MIN	TYP	MAX	MIN	TYP	MAX	
V_Z	Reverse breakdown voltage	I_Z = 100µA	25°C		5			5			5		V
ΔV_Z	Reverse breakdown voltage tolerance	I_Z = 100µA	25°C	–5		5	–10		10	–25		25	mV
			Full range	–22		22	–27		27	–42		42	
$I_{Z,min}$	Minimum cathode current		25°C		56	74		56	74		56	74	µA
			Full range			80			80			80	
α_{VZ}	Average temperature coefficient of reverse breakdown voltage	I_Z = 10mA	25°C		±30			±30			±30		ppm/°C
		I_Z = 1mA	25°C		±20			±20			±20		
		I_Z = 100µA	25°C		±20			±20			±20		
			Full range			±50			±50			±50	
$\frac{\Delta V_Z}{\Delta I_Z}$	Reverse breakdown voltage change with cathode current change	$I_{Z,min} < I_Z < 1mA$	25°C		0.2	1		0.2	1		0.2	1	mV
			Full range			1.4			1.4			1.4	
		1mA < I_Z < 15mA	25°C		2	8		2	8		2	8	
			Full range			12			12			12	
Z_Z	Reverse dynamic impedance	I_Z = 1mA, f = 120Hz, I_{AC} = 0.1 I_Z	25°C		0.5			0.5			0.5		Ω
e_N	Wide band noise	I_Z = 100µA, 10Hz ≤ f ≤10 kHz	25°C		93			93			93		$µV_{RMS}$
	Long-term stability of reverse breakdown voltage	t = 1000 h, T_A = 25°C ± 0.1°C, I_Z = 100µA			120			120			120		ppm
V_{HYST}	Thermal hysteresis(1)	ΔT_A = –40°C to 125°C			1.4			1.4			1.4		mV

(1) Thermal hysteresis is defined as $V_{Z,25°C}$ (after cycling to –40°C) – $V_{Z,25°C}$ (after cycling to 125°C).

5.9 TL4050x50Q Electrical Characteristics

at extended temperature range, full range T_A = –40°C to 125°C (unless otherwise noted)

PARAMETER		TEST CONDITIONS	T_A	TL4050A50Q			TL4050B50Q			TL4050C50Q			UNIT
				MIN	TYP	MAX	MIN	TYP	MAX	MIN	TYP	MAX	
V_Z	Reverse breakdown voltage	I_Z = 100µA	25°C		5			5			5		V
ΔV_Z	Reverse breakdown voltage tolerance	I_Z = 100µA	25°C	–5		5	–10		10	–25		25	mV
			Full range	–30		30	–35		35	–50		50	
$I_{Z,min}$	Minimum cathode current		25°C		56	74		56	74		56	74	µA
			Full range			90			90			90	
α_{VZ}	Average temperature coefficient of reverse breakdown voltage	I_Z = 10mA	25°C		±30			±30			±30		ppm/°C
		I_Z = 1mA	25°C		±20			±20			±20		
		I_Z = 100µA	25°C		±20			±20			±20		
			Full range			±50			±50			±50	
$\frac{\Delta V_Z}{\Delta I_Z}$	Reverse breakdown voltage change with cathode current change	$I_{Z,min} < I_Z < 1mA$	25°C		0.2	1		0.2	1		0.2	1	mV
			Full range			1.4			1.4			1.4	
		1mA < I_Z < 15mA	25°C		2	8		2	8		2	8	
			Full range			12			12			12	
Z_Z	Reverse dynamic impedance	I_Z = 1mA, f = 120Hz, I_{AC} = 0.1 I_Z	25°C		0.5			0.5			0.5		Ω
e_N	Wide band noise	I_Z = 100µA, 10Hz ≤ f ≤ 10kHz	25°C		93			93			93		$µV_{RMS}$
	Long-term stability of reverse breakdown voltage	t = 1000 h, T_A = 25°C ± 0.1°C, I_Z = 100µA			120			120			120		ppm
V_{HYST}	Thermal hysteresis(1)	ΔT_A = –40°C to 125°C			1.4			1.4			1.4		mV

(1) Thermal hysteresis is defined as $V_{Z,25°C}$ (after cycling to –40°C) – $V_{Z,25°C}$ (after cycling to 125°C).

Copyright © 2025 Texas Instruments Incorporated

5.10 TL4050x10I Electrical Characteristics

at industrial temperature range, full range T_A = –40°C to 85°C (unless otherwise noted)

PARAMETER		TEST CONDITIONS	T_A	TL4050A10I			TL4050B10I			TL4050C10I			UNIT
				MIN	TYP	MAX	MIN	TYP	MAX	MIN	TYP	MAX	
V_Z	Reverse breakdown voltage	I_Z = 100µA	25°C		10			10			10		V
ΔV_Z	Reverse breakdown voltage tolerance	I_Z = 100µA	25°C	–10		10	–20		20	–50		50	mV
			Full range	–43		43	–53		53	–83		83	
$I_{Z,min}$	Minimum cathode current		25°C		80	100		80	100		80	100	µA
			Full range			103			103			103	
α_{VZ}	Average temperature coefficient of reverse breakdown voltage	I_Z = 10mA	25°C		±40			±40			±40		ppm/°C
		I_Z = 1mA	25°C		±20			±20			±20		
		I_Z = 100µA	25°C		±20			±20			±20		
			Full range			±50			±50			±50	
$\frac{\Delta V_Z}{\Delta I_Z}$	Reverse breakdown voltage change with cathode current change	$I_{Z,min} < I_Z < 1mA$	25°C		0.8	1.5		0.8	1.5		0.8	1.5	mV
			Full range			3.8			3.8			3.8	
		1mA < I_Z < 15mA	25°C		8	12		8	12		8	12	
			Full range			23			23			23	
Z_Z	Reverse dynamic impedance	I_Z = 1mA, f = 120Hz, I_{AC} = 0.1 I_Z	25°C		0.7			0.7			0.7		Ω
e_N	Wide band noise	I_Z = 100µA, 10Hz ≤ f ≤ 10kHz	25°C		150			150			150		$µV_{RMS}$
	Long-term stability of reverse breakdown voltage	t = 1000 h, T_A = 25°C ± 0.1°C, I_Z = 100µA			120			120			120		ppm
V_{HYST}	Thermal hysteresis(1)	ΔT_A = –40°C to 125°C			2.8			2.8			2.8		mV

(1) Thermal hysteresis is defined as $V_{Z,25°C}$ (after cycling to –40°C) – $V_{Z,25°C}$ (after cycling to 125°C).

5.11 TL4050x10Q Electrical Characteristics

at extended temperature range, full range T_A = –40°C to 125°C (unless otherwise noted)

PARAMETER		TEST CONDITIONS	T_A	TL4050A10Q			TL4050B10Q			TL4050C10Q			UNIT
				MIN	TYP	MAX	MIN	TYP	MAX	MIN	TYP	MAX	
V_Z	Reverse breakdown voltage	I_Z = 100µA	25°C		10			10			10		V
ΔV_Z	Reverse breakdown voltage tolerance	I_Z = 100µA	25°C	–10		10	–20		20	–50		50	mV
			Full range	–60		60	–70		70	–100		100	
$I_{Z,min}$	Minimum cathode current		25°C		80	100		80	100		80	100	µA
			Full range			110			110			110	
α_{VZ}	Average temperature coefficient of reverse breakdown voltage	I_Z = 10mA	25°C		±40			±40			±40		ppm/°C
		I_Z = 1mA	25°C		±20			±20			±20		
		I_Z = 100µA	25°C		±20			±20			±20		
			Full range			±50			±50			±50	
$\frac{\Delta V_Z}{\Delta I_Z}$	Reverse breakdown voltage change with cathode current change	$I_{Z,min} < I_Z < 1mA$	25°C		0.8	1.5		0.8	1.5		0.8	1.5	mV
			Full range			3.8			3.8			3.8	
		1mA < I_Z < 15mA	25°C		8	12		8	12		8	12	
			Full range			23			23			23	
Z_Z	Reverse dynamic impedance	I_Z = 1mA, f = 120Hz, I_{AC} = 0.1 I_Z	25°C		0.7			0.7			0.7		Ω
e_N	Wide band noise	I_Z = 100µA, 10Hz ≤ f ≤10 kHz	25°C		150			150			150		$µV_{RMS}$
	Long-term stability of reverse breakdown voltage	t = 1000 h, T_A = 25°C ± 0.1°C, I_Z = 100µA			120			120			120		ppm
V_{HYST}	Thermal hysteresis(1)	ΔT_A = –40°C to 125°C			2.8			2.8			2.8		mV

(1) Thermal hysteresis is defined as $V_{Z,25°C}$ (after cycling to –40°C) – $V_{Z,25°C}$ (after cycling to 125°C).

Copyright © 2025 Texas Instruments Incorporated

6 Typical Characteristics

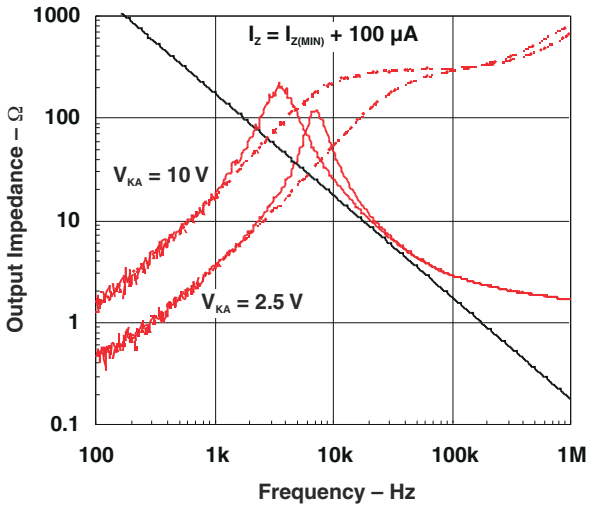

Figure 6-1. Output Impedance vs Frequency

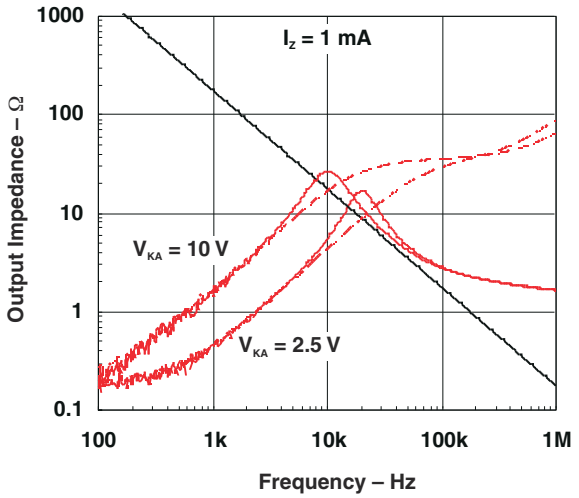

Figure 6-2. Output Impedance vs Frequency

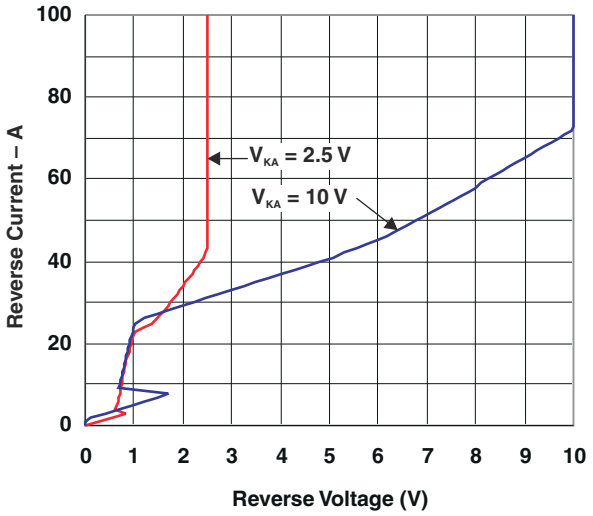

Figure 6-3. Reverse Characteristics And Minimum Operating Current

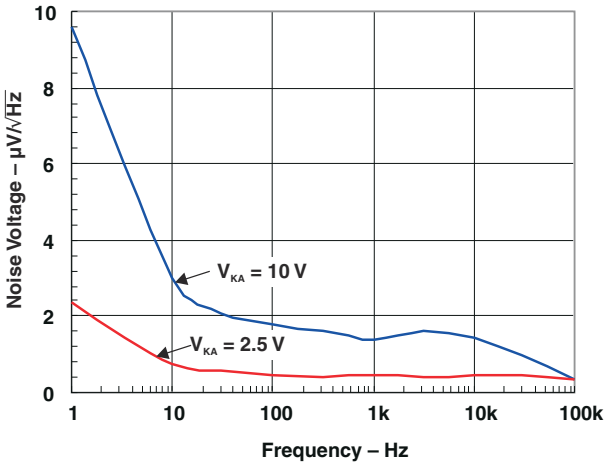

Figure 6-4. Noise Voltage vs Frequency

6 Typical Characteristics (continued)

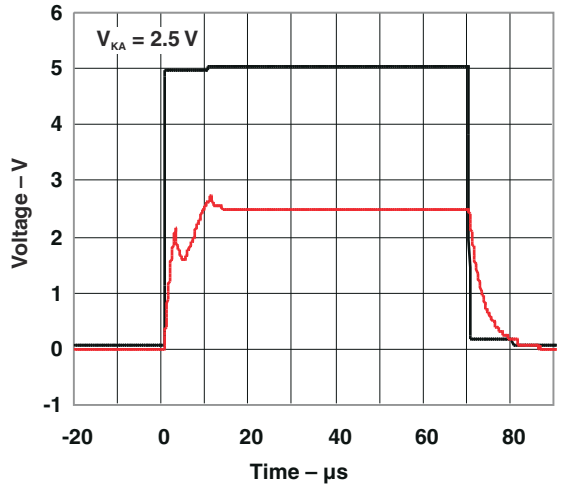

Figure 6-5. Large Signal Pulse Response

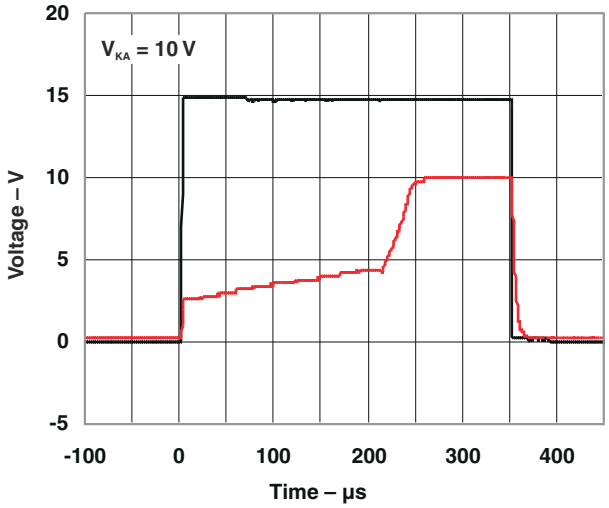

Figure 6-6. Large Signal Pulse Response

Copyright © 2025 Texas Instruments Incorporated

7 Detailed Description

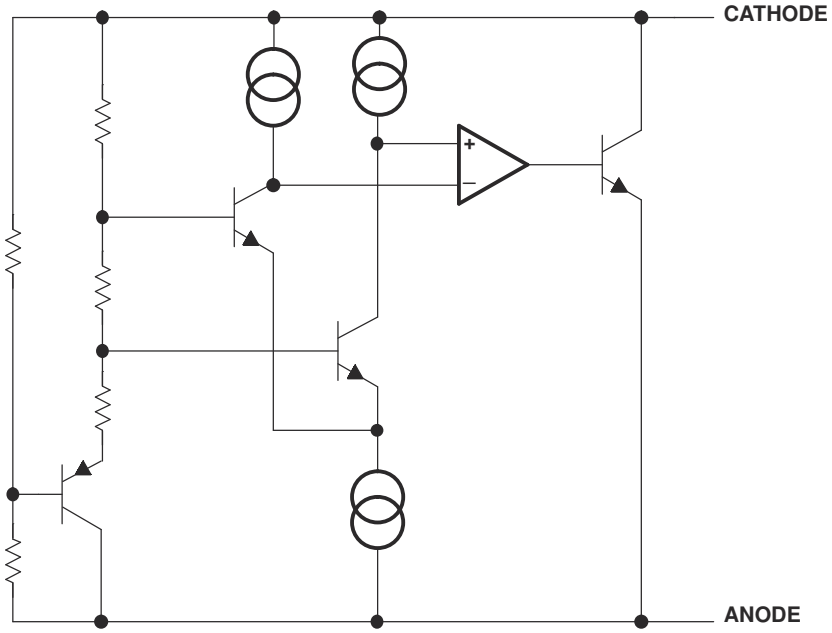

Figure 7-1. Functional Block Diagram

8 Application Information

Note

Information in the following applications sections is not part of the TI component specification, and TI does not warrant its accuracy or completeness. TI's customers are responsible for determining suitability of components for their purposes, as well as validating and testing their design implementation to confirm system functionality.

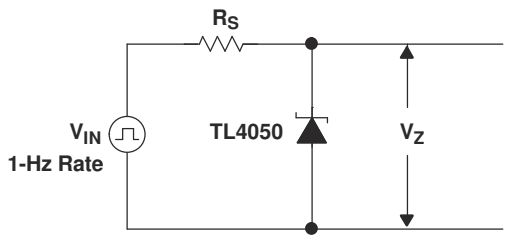

Figure 8-1. Start-Up Test Circuit

8.1 Output Capacitor

The TL4050 does not require an output capacitor across cathode and anode for stability. However, if an output bypass capacitor is desired, the TL4050 is designed to be stable with all capacitive loads.

8.2 SOT-23 Pin Connections

There is a parasitic Schottky diode connected between pins 2 and 3 of the SOT-23 packaged device. Thus, pin 3 of the SOT-23 package must be left floating or connected to pin 2.

8.3 Use With an ADC or DAC

The TL4050x-41 is designed to be a cost-effective voltage reference as required in 12-bit data-acquisition systems. For 12-bit systems operating from 5V supplies, such as the ADS7842 (see Figure 8-2), the TL4050x-41 (4.096V) permits operation with an LSB of 1mV.

Copyright © 2025 Texas Instruments Incorporated

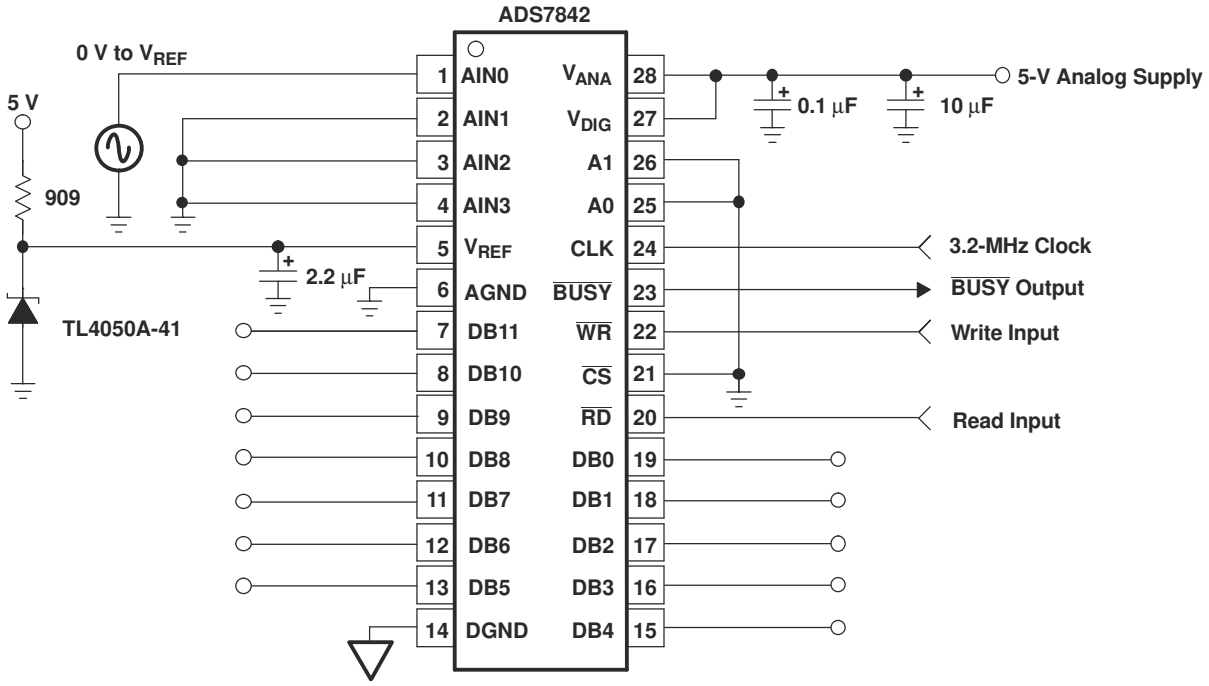

Figure 8-2. Data-Acquisition Circuit With TL4050x-41

8.4 Cathode and Load Currents

In a typical shunt-regulator configuration (see Figure 8-3), an external resistor, R_S, is connected between the supply and the cathode of the TL4050. R_S must be set properly, as R_S sets the total current available to supply the load (I_L) and bias the TL4050 (I_Z). In all cases, I_Z must stay within a specified range for proper operation of the reference. Taking into consideration one extreme in the variation of the load and supply voltage (maximum I_L and minimum V_S), R_S must be small enough to supply the minimum I_Z required for operation of the regulator, as given by data-sheet parameters. At the other extreme, maximum V_S and minimum I_L, R_S must be large enough to limit I_Z to less than the maximum-rated value of 15mA.

R_S is calculated according to Equation 1:

$$R_S = \frac{(V_S - V_Z)}{(I_L + I_Z)} \tag{1}$$

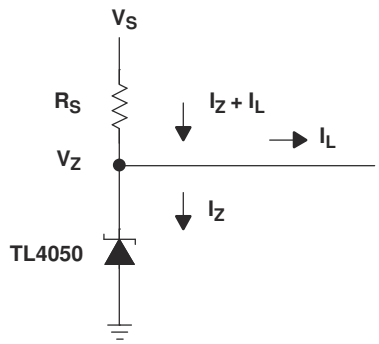

Figure 8-3. Shunt Regulator

Copyright © 2025 Texas Instruments Incorporated

9 Device and Documentation Support

9.1 Ordering Information

Table 9-1. Ordering Information [1]

T_A	DEVICE GRADE	V_{KA}	PACKAGE[2]		ORDERABLE PART NUMBER	TOP-SIDE MARKING[3]
–40°C to 85°C	A grade: 0.1% initial accuracy and 50ppm/°C temperature coefficient	2.5 V	SOT-23-3 – DBZ	Reel of 3000	TL4050A25IDBZR	TKE_
				Reel of 250	TL4050A25IDBZT	
			SC-70 – DCK	Reel of 3000	TL4050A25IDCKR	82_
				Reel of 250	TL4050A25IDCKT	
		4.096 V	SOT-23-3 – DBZ	Reel of 3000	TL4050A41IDBZR	TKL_
				Reel of 250	TL4050A41IDBZT	
			SC-70 – DCK	Reel of 3000	TL4050A41IDCKR	8E_
				Reel of 250	TL4050A41IDCKT	
		5 V	SOT-23-3 – DBZ	Reel of 3000	TL4050A50IDBZR	TKS_
				Reel of 250	TL4050A50IDBZT	
			SC-70 – DCK	Reel of 3000	TL4050A50IDCKR	8L_
				Reel of 250	TL4050A50IDCKT	
		10 V	SOT-23-3 – DBZ	Reel of 3000	TL4050A10IDBZR	TK2_
				Reel of 250	TL4050A10IDBZT	
			SC-70 – DCK	Reel of 3000	TL4050A10IDCKR	8Z_
				Reel of 250	TL4050A10IDCKT	
	B grade: 0.2% initial accuracy and 50ppm/°C temperature coefficient	2.5 V	SOT-23-3 – DBZ	Reel of 3000	TL4050B25IDBZR	TKF_
				Reel of 250	TL4050B25IDBZT	
			SC-70 – DCK	Reel of 3000	TL4050B25IDCKR	83_
				Reel of 250	TL4050B25IDCKT	
		4.096 V	SOT-23-3 – DBZ	Reel of 3000	TL4050B41IDBZR	TKM_
				Reel of 250	TL4050B41IDBZT	
			SC-70 – DCK	Reel of 3000	TL4050B41IDCKR	8F_
				Reel of 250	TL4050B41IDCKT	
		5 V	SOT-23-3 – DBZ	Reel of 3000	TL4050B50IDBZR	TKT_
				Reel of 250	TL4050B50IDBZT	
			SC-70 – DCK	Reel of 3000	TL4050B50IDCKR	8M_
				Reel of 250	TL4050B50IDCKT	
		10 V	SOT-23-3 – DBZ	Reel of 3000	TL4050B10IDBZR	TK3_
				Reel of 250	TL4050B10IDBZT	
			SC-70 – DCK	Reel of 3000	TL4050B10IDCKR	92_
				Reel of 250	TL4050B10IDCKT	

Copyright © 2025 Texas Instruments Incorporated

Table 9-1. Ordering Information [1] (continued)

T_A	DEVICE GRADE	V_{KA}	PACKAGE[2]		ORDERABLE PART NUMBER	TOP-SIDE MARKING[3]
–40°C to 85°C	C grade: 0.5% initial accuracy and 50ppm/°C temperature coefficient	2.5 V	SOT-23-3 – DBZ	Reel of 3000	TL4050C25IDBZR	TKG_
				Reel of 250	TL4050C25IDBZT	
			SC-70 – DCK	Reel of 3000	TL4050C25IDCKR	84_
				Reel of 250	TL4050C25IDCKT	
		4.096 V	SOT-23-3 – DBZ	Reel of 3000	TL4050C41IDBZR	TKN_
				Reel of 250	TL4050C41IDBZT	
			SC-70 – DCK	Reel of 3000	TL4050C41IDCKR	8G_
				Reel of 250	TL4050C41IDCKT	
		5 V	SOT-23-3 – DBZ	Reel of 3000	TL4050C50IDBZR	TKU_
				Reel of 250	TL4050C50IDBZT	
			SC-70 – DCK	Reel of 3000	TL4050C50IDCKR	8N_
				Reel of 250	TL4050C50IDCKT	
		10 V	SOT-23-3 – DBZ	Reel of 3000	TL4050C10IDBZR	TK4_
				Reel of 250	TL4050C10IDBZT	
			SC-70 – DCK	Reel of 3000	TL4050C10IDCKR	93_
				Reel of 250	TL4050C10IDCKT	
–40°C to 125°C	A grade: 0.1% initial accuracy and 50ppm/°C temperature coefficient	2.5 V	SOT-23-3 – DBZ	Reel of 3000	TL4050A25QDBZR	TKH_
				Reel of 250	TL4050A25QDBZT	
			SC-70 – DCK	Reel of 3000	TL4050A25QDCKR	85_
				Reel of 250	TL4050A25QDCKT	
		4.096 V	SOT-23-3 – DBZ	Reel of 3000	TL4050A41QDBZR	TKP_
				Reel of 250	TL4050A41QDBZT	
			SC-70 – DCK	Reel of 3000	TL4050A41QDCKR	8H_
				Reel of 250	TL4050A41QDCKT	
		5 V	SOT-23-3 – DBZ	Reel of 3000	TL4050A50QDBZR	TKV_
				Reel of 250	TL4050A50QDBZT	
			SC-70 – DCK	Reel of 3000	TL4050A50QDCKR	8P_
				Reel of 250	TL4050A50QDCKT	
		10 V	SOT-23-3 – DBZ	Reel of 3000	TL4050A10QDBZR	TK5_
				Reel of 250	TL4050A10QDBZT	
			SC-70 – DCK	Reel of 3000	TL4050A10QDCKR	94_
				Reel of 250	TL4050A10QDCKT	

Copyright © 2025 Texas Instruments Incorporated

Table 9-1. Ordering Information (1) (continued)

T_A	DEVICE GRADE	V_{KA}	PACKAGE(2)		ORDERABLE PART NUMBER	TOP-SIDE MARKING(3)
–40°C to 125°C	B grade: 0.2% initial accuracy and 50ppm/°C temperature coefficient	2.5 V	SOT-23-3 – DBZ	Reel of 3000	TL4050B25QDBZR	TKJ_
				Reel of 250	TL4050B25QDBZT	
			SC-70 – DCK	Reel of 3000	TL4050B25QDCKR	86_
				Reel of 250	TL4050B25QDCKT	
		4.096 V	SOT-23-3 – DBZ	Reel of 3000	TL4050B41QDBZR	TKQ_
				Reel of 250	TL4050B41QDBZT	
			SC-70 – DCK	Reel of 3000	TL4050B41QDCKR	8J_
				Reel of 250	TL4050B41QDCKT	
		5 V	SOT-23-3 – DBZ	Reel of 3000	TL4050B50QDBZR	TKW_
				Reel of 250	TL4050B50QDBZT	
			SC-70 – DCK	Reel of 3000	TL4050B50QDCKR	8R_
				Reel of 250	TL4050B50QDCKT	
		10 V	SOT-23-3 – DBZ	Reel of 3000	TL4050B10QDBZR	TK6_
				Reel of 250	TL4050B10QDBZT	
			SC-70 – DCK	Reel of 3000	TL4050B10QDCKR	95_
				Reel of 250	TL4050B10QDCKT	
	C grade: 0.5% initial accuracy and 50ppm/°C temperature coefficient	2.5 V	SOT-23-3 – DBZ	Reel of 3000	TL4050C25QDBZR	TKK_
				Reel of 250	TL4050C25QDBZT	
			SC-70 – DCK	Reel of 3000	TL4050C25QDCKR	87_
				Reel of 250	TL4050C25QDCKT	
		4.096 V	SOT-23-3 – DBZ	Reel of 3000	TL4050C41QDBZR	TKR_
				Reel of 250	TL4050C41QDBZT	
			SC-70 – DCK	Reel of 3000	TL4050C41QDCKR	8K_
				Reel of 250	TL4050C41QDCKT	
		5 V	SOT-23-3 – DBZ	Reel of 3000	TL4050C50QDBZR	TKY_
				Reel of 250	TL4050C50QDBZT	
			SC-70 – DCK	Reel of 3000	TL4050C50QDCKR	8S_
				Reel of 250	TL4050C50QDCKT	
		10 V	SOT-23-3 – DBZ	Reel of 3000	TL4050C10QDBZR	TK7_
				Reel of 250	TL4050C10QDBZT	
			SC-70 – DCK	Reel of 3000	TL4050C10QDCKR	96_
				Reel of 250	TL4050C10QDCKT	

(1) For the most current package and ordering information, see the Package Option Addendum at the end of this document, or see the TI web site at www.ti.com.
(2) Package drawings, thermal data, and symbolization are available at www.ti.com/packaging.
(3) The actual top-side marking has one additional character that designates the wafer fab/assembly site.

9.2 Receiving Notification of Documentation Updates

To receive notification of documentation updates, navigate to the device product folder on ti.com. Click on *Notifications* to register and receive a weekly digest of any product information that has changed. For change details, review the revision history included in any revised document.

9.3 Support Resources

TI E2E™ support forums are an engineer's go-to source for fast, verified answers and design help — straight from the experts. Search existing answers or ask your own question to get the quick design help you need.

Linked content is provided "AS IS" by the respective contributors. They do not constitute TI specifications and do not necessarily reflect TI's views; see TI's Terms of Use.

9.4 Trademarks

TI E2E™ is a trademark of Texas Instruments.
All trademarks are the property of their respective owners.

9.5 Electrostatic Discharge Caution

This integrated circuit can be damaged by ESD. Texas Instruments recommends that all integrated circuits be handled with appropriate precautions. Failure to observe proper handling and installation procedures can cause damage.

ESD damage can range from subtle performance degradation to complete device failure. Precision integrated circuits may be more susceptible to damage because very small parametric changes could cause the device not to meet its published specifications.

9.6 Glossary

TI Glossary	This glossary lists and explains terms, acronyms, and definitions.

10 Revision History

NOTE: Page numbers for previous revisions may differ from page numbers in the current version.

Changes from Revision A (June 2007) to Revision B (March 2025)	Page
• Updated the numbering format for tables, figures, and cross-references throughout the document	1
• Updated pinout information for high EMI applications	1
• Added ESD ratings	4
• Updated reverse breakdown voltage change with cathode current change	11
• Updated reverse breakdown voltage change with operating current change	12

Copyright © 2025 Texas Instruments Incorporated

11 Mechanical, Packaging, and Orderable Information

The following pages include mechanical, packaging, and orderable information. This information is the most current data available for the designated devices. This data is subject to change without notice and revision of this document. For browser-based versions of this data sheet, refer to the left-hand navigation.

PACKAGING INFORMATION

Orderable part number	Status (1)	Material type (2)	Package | Pins	Package qty | Carrier	RoHS (3)	Lead finish/ Ball material (4)	MSL rating/ Peak reflow (5)	Op temp (°C)	Part marking (6)
TL4050A10IDBZR	Active	Production	SOT-23 (DBZ) | 3	3000 | LARGE T&R	Yes	NIPDAU	Level-1-260C-UNLIM	-40 to 85	TK2U
TL4050A10IDBZR.A	Active	Production	SOT-23 (DBZ) | 3	3000 | LARGE T&R	Yes	NIPDAU	Level-1-260C-UNLIM	-40 to 85	TK2U
TL4050A10IDBZT	Active	Production	SOT-23 (DBZ) | 3	250 | SMALL T&R	Yes	NIPDAU	Level-1-260C-UNLIM	-40 to 85	TK2U
TL4050A10IDBZT.A	Active	Production	SOT-23 (DBZ) | 3	250 | SMALL T&R	Yes	NIPDAU	Level-1-260C-UNLIM	-40 to 85	TK2U
TL4050A10IDCKR	Active	Production	SC70 (DCK) | 5	3000 | LARGE T&R	Yes	NIPDAU	Level-1-260C-UNLIM	-40 to 85	8ZU
TL4050A10IDCKR.A	Active	Production	SC70 (DCK) | 5	3000 | LARGE T&R	Yes	NIPDAU	Level-1-260C-UNLIM	-40 to 85	8ZU
TL4050A10IDCKT	Active	Production	SC70 (DCK) | 5	250 | SMALL T&R	Yes	NIPDAU	Level-1-260C-UNLIM	-40 to 85	8ZU
TL4050A10IDCKT.A	Active	Production	SC70 (DCK) | 5	250 | SMALL T&R	Yes	NIPDAU	Level-1-260C-UNLIM	-40 to 85	8ZU
TL4050A10QDBZR	Active	Production	SOT-23 (DBZ) | 3	3000 | LARGE T&R	Yes	NIPDAU	Level-1-260C-UNLIM	-40 to 125	TK5U
TL4050A10QDBZR.A	Active	Production	SOT-23 (DBZ) | 3	3000 | LARGE T&R	Yes	NIPDAU	Level-1-260C-UNLIM	-40 to 125	TK5U
TL4050A10QDCKR	Active	Production	SC70 (DCK) | 5	3000 | LARGE T&R	Yes	NIPDAU	Level-1-260C-UNLIM	-40 to 125	94U
TL4050A10QDCKR.A	Active	Production	SC70 (DCK) | 5	3000 | LARGE T&R	Yes	NIPDAU	Level-1-260C-UNLIM	-40 to 125	94U
TL4050A25IDBZR	Active	Production	SOT-23 (DBZ) | 3	3000 | LARGE T&R	Yes	NIPDAU | SN	Level-1-260C-UNLIM	-40 to 85	TKEU
TL4050A25IDBZR.A	Active	Production	SOT-23 (DBZ) | 3	3000 | LARGE T&R	Yes	SN	Level-1-260C-UNLIM	-40 to 85	TKEU
TL4050A25IDBZT	Active	Production	SOT-23 (DBZ) | 3	250 | SMALL T&R	Yes	NIPDAU | SN	Level-1-260C-UNLIM	-40 to 85	TKEU
TL4050A25IDBZT.A	Active	Production	SOT-23 (DBZ) | 3	250 | SMALL T&R	Yes	SN	Level-1-260C-UNLIM	-40 to 85	TKEU
TL4050A25IDCKR	Active	Production	SC70 (DCK) | 5	3000 | LARGE T&R	Yes	NIPDAU | SN	Level-1-260C-UNLIM	-40 to 85	82U
TL4050A25IDCKR.A	Active	Production	SC70 (DCK) | 5	3000 | LARGE T&R	Yes	SN	Level-1-260C-UNLIM	-40 to 85	82U
TL4050A25IDCKT	Active	Production	SC70 (DCK) | 5	250 | SMALL T&R	Yes	NIPDAU | SN	Level-1-260C-UNLIM	-40 to 85	82U
TL4050A25IDCKT.A	Active	Production	SC70 (DCK) | 5	250 | SMALL T&R	Yes	SN	Level-1-260C-UNLIM	-40 to 85	82U
TL4050A25QDBZR	Active	Production	SOT-23 (DBZ) | 3	3000 | LARGE T&R	Yes	NIPDAU | SN	Level-1-260C-UNLIM	-40 to 125	TKHU
TL4050A25QDBZR.A	Active	Production	SOT-23 (DBZ) | 3	3000 | LARGE T&R	Yes	SN	Level-1-260C-UNLIM	-40 to 125	TKHU
TL4050A25QDBZT	Active	Production	SOT-23 (DBZ) | 3	250 | SMALL T&R	Yes	NIPDAU | SN	Level-1-260C-UNLIM	-40 to 125	TKHU
TL4050A25QDBZT.A	Active	Production	SOT-23 (DBZ) | 3	250 | SMALL T&R	Yes	SN	Level-1-260C-UNLIM	-40 to 125	TKHU
TL4050A25QDCKR	Active	Production	SC70 (DCK) | 5	3000 | LARGE T&R	Yes	NIPDAU | SN	Level-1-260C-UNLIM	-40 to 125	85U
TL4050A25QDCKR.A	Active	Production	SC70 (DCK) | 5	3000 | LARGE T&R	Yes	SN	Level-1-260C-UNLIM	-40 to 125	85U
TL4050A41IDBZR	Active	Production	SOT-23 (DBZ) | 3	3000 | LARGE T&R	Yes	NIPDAU | SN	Level-1-260C-UNLIM	-40 to 85	(TKL3, TKLU)
TL4050A41IDBZR.A	Active	Production	SOT-23 (DBZ) | 3	3000 | LARGE T&R	Yes	SN	Level-1-260C-UNLIM	-40 to 85	(TKL3, TKLU)
TL4050A41IDBZT	Active	Production	SOT-23 (DBZ) | 3	250 | SMALL T&R	Yes	NIPDAU | SN	Level-1-260C-UNLIM	-40 to 85	(TKL3, TKLU)

Orderable part number	Status (1)	Material type (2)	Package | Pins	Package qty | Carrier	RoHS (3)	Lead finish/ Ball material (4)	MSL rating/ Peak reflow (5)	Op temp (°C)	Part marking (6)
TL4050A41IDBZT.A	Active	Production	SOT-23 (DBZ) | 3	250 | SMALL T&R	Yes	SN	Level-1-260C-UNLIM	-40 to 85	(TKL3, TKLU)
TL4050A41QDBZR	Active	Production	SOT-23 (DBZ) | 3	3000 | LARGE T&R	Yes	NIPDAU | SN	Level-1-260C-UNLIM	-40 to 125	(TKP3, TKPU)
TL4050A41QDBZR.A	Active	Production	SOT-23 (DBZ) | 3	3000 | LARGE T&R	Yes	SN	Level-1-260C-UNLIM	-40 to 125	(TKP3, TKPU)
TL4050A41QDBZT	Active	Production	SOT-23 (DBZ) | 3	250 | SMALL T&R	Yes	NIPDAU | SN	Level-1-260C-UNLIM	-40 to 125	(TKP3, TKPU)
TL4050A41QDBZT.A	Active	Production	SOT-23 (DBZ) | 3	250 | SMALL T&R	Yes	SN	Level-1-260C-UNLIM	-40 to 125	(TKP3, TKPU)
TL4050A41QDCKR	Active	Production	SC70 (DCK) | 5	3000 | LARGE T&R	Yes	NIPDAU | SN	Level-1-260C-UNLIM	-40 to 125	8HU
TL4050A41QDCKR.A	Active	Production	SC70 (DCK) | 5	3000 | LARGE T&R	Yes	SN	Level-1-260C-UNLIM	-40 to 125	8HU
TL4050A50IDBZR	Active	Production	SOT-23 (DBZ) | 3	3000 | LARGE T&R	Yes	NIPDAU | SN	Level-1-260C-UNLIM	-40 to 85	(TKS3, TKSU)
TL4050A50IDBZR.A	Active	Production	SOT-23 (DBZ) | 3	3000 | LARGE T&R	Yes	SN	Level-1-260C-UNLIM	-40 to 85	(TKS3, TKSU)
TL4050A50IDBZT	Active	Production	SOT-23 (DBZ) | 3	250 | SMALL T&R	Yes	NIPDAU | SN	Level-1-260C-UNLIM	-40 to 85	(TKS3, TKSU)
TL4050A50IDBZT.A	Active	Production	SOT-23 (DBZ) | 3	250 | SMALL T&R	Yes	SN	Level-1-260C-UNLIM	-40 to 85	(TKS3, TKSU)
TL4050A50IDCKR	Active	Production	SC70 (DCK) | 5	3000 | LARGE T&R	Yes	NIPDAU | SN	Level-1-260C-UNLIM	-40 to 85	8LU
TL4050A50IDCKR.A	Active	Production	SC70 (DCK) | 5	3000 | LARGE T&R	Yes	SN	Level-1-260C-UNLIM	-40 to 85	8LU
TL4050A50IDCKT	Active	Production	SC70 (DCK) | 5	250 | SMALL T&R	Yes	NIPDAU | SN	Level-1-260C-UNLIM	-40 to 85	8LU
TL4050A50IDCKT.A	Active	Production	SC70 (DCK) | 5	250 | SMALL T&R	Yes	SN	Level-1-260C-UNLIM	-40 to 85	8LU
TL4050A50QDBZR	Active	Production	SOT-23 (DBZ) | 3	3000 | LARGE T&R	Yes	NIPDAU | SN	Level-1-260C-UNLIM	-40 to 125	(TKV3, TKVU)
TL4050A50QDBZR.A	Active	Production	SOT-23 (DBZ) | 3	3000 | LARGE T&R	Yes	SN	Level-1-260C-UNLIM	-40 to 125	(TKV3, TKVU)
TL4050A50QDBZT	Active	Production	SOT-23 (DBZ) | 3	250 | SMALL T&R	Yes	NIPDAU | SN	Level-1-260C-UNLIM	-40 to 125	(TKV3, TKVU)
TL4050A50QDBZT.A	Active	Production	SOT-23 (DBZ) | 3	250 | SMALL T&R	Yes	SN	Level-1-260C-UNLIM	-40 to 125	(TKV3, TKVU)
TL4050A50QDCKR	Active	Production	SC70 (DCK) | 5	3000 | LARGE T&R	Yes	NIPDAU | SN	Level-1-260C-UNLIM	-40 to 125	8PU
TL4050A50QDCKR.A	Active	Production	SC70 (DCK) | 5	3000 | LARGE T&R	Yes	SN	Level-1-260C-UNLIM	-40 to 125	8PU
TL4050B10IDBZR	Active	Production	SOT-23 (DBZ) | 3	3000 | LARGE T&R	Yes	NIPDAU	Level-1-260C-UNLIM	-40 to 85	TK3U
TL4050B10IDBZR.A	Active	Production	SOT-23 (DBZ) | 3	3000 | LARGE T&R	Yes	NIPDAU	Level-1-260C-UNLIM	-40 to 85	TK3U
TL4050B10IDBZT	Active	Production	SOT-23 (DBZ) | 3	250 | SMALL T&R	Yes	NIPDAU	Level-1-260C-UNLIM	-40 to 85	TK3U
TL4050B10IDBZT.A	Active	Production	SOT-23 (DBZ) | 3	250 | SMALL T&R	Yes	NIPDAU	Level-1-260C-UNLIM	-40 to 85	TK3U
TL4050B10QDBZR	Active	Production	SOT-23 (DBZ) | 3	3000 | LARGE T&R	Yes	NIPDAU	Level-1-260C-UNLIM	-40 to 125	TK6U
TL4050B10QDBZR.A	Active	Production	SOT-23 (DBZ) | 3	3000 | LARGE T&R	Yes	NIPDAU	Level-1-260C-UNLIM	-40 to 125	TK6U
TL4050B10QDBZT	Active	Production	SOT-23 (DBZ) | 3	250 | SMALL T&R	Yes	NIPDAU	Level-1-260C-UNLIM	-40 to 125	TK6U
TL4050B10QDBZT.A	Active	Production	SOT-23 (DBZ) | 3	250 | SMALL T&R	Yes	NIPDAU	Level-1-260C-UNLIM	-40 to 125	TK6U
TL4050B10QDCKR	Active	Production	SC70 (DCK) | 5	3000 | LARGE T&R	Yes	NIPDAU	Level-1-260C-UNLIM	-40 to 125	95U
TL4050B10QDCKR.A	Active	Production	SC70 (DCK) | 5	3000 | LARGE T&R	Yes	NIPDAU	Level-1-260C-UNLIM	-40 to 125	95U

Orderable part number	Status (1)	Material type (2)	Package | Pins	Package qty | Carrier	RoHS (3)	Lead finish/ Ball material (4)	MSL rating/ Peak reflow (5)	Op temp (°C)	Part marking (6)
TL4050B10QDCKRG4	Active	Production	SC70 (DCK) | 5	3000 | LARGE T&R	Yes	NIPDAU	Level-1-260C-UNLIM	-40 to 125	95U
TL4050B10QDCKRG4.A	Active	Production	SC70 (DCK) | 5	3000 | LARGE T&R	Yes	NIPDAU	Level-1-260C-UNLIM	-40 to 125	95U
TL4050B25IDBZR	Active	Production	SOT-23 (DBZ) | 3	3000 | LARGE T&R	Yes	NIPDAU | SN	Level-1-260C-UNLIM	-40 to 85	TKFU
TL4050B25IDBZR.A	Active	Production	SOT-23 (DBZ) | 3	3000 | LARGE T&R	Yes	SN	Level-1-260C-UNLIM	-40 to 85	TKFU
TL4050B25IDBZT	Active	Production	SOT-23 (DBZ) | 3	250 | SMALL T&R	Yes	NIPDAU | SN	Level-1-260C-UNLIM	-40 to 85	TKFU
TL4050B25IDBZT.A	Active	Production	SOT-23 (DBZ) | 3	250 | SMALL T&R	Yes	SN	Level-1-260C-UNLIM	-40 to 85	TKFU
TL4050B25IDCKR	Active	Production	SC70 (DCK) | 5	3000 | LARGE T&R	Yes	NIPDAU | SN	Level-1-260C-UNLIM	-40 to 85	83U
TL4050B25IDCKR.A	Active	Production	SC70 (DCK) | 5	3000 | LARGE T&R	Yes	SN	Level-1-260C-UNLIM	-40 to 85	83U
TL4050B25QDBZR	Active	Production	SOT-23 (DBZ) | 3	3000 | LARGE T&R	Yes	NIPDAU | SN	Level-1-260C-UNLIM	-40 to 125	TKJU
TL4050B25QDBZR.A	Active	Production	SOT-23 (DBZ) | 3	3000 | LARGE T&R	Yes	SN	Level-1-260C-UNLIM	-40 to 125	TKJU
TL4050B25QDCKR	Active	Production	SC70 (DCK) | 5	3000 | LARGE T&R	Yes	NIPDAU | SN	Level-1-260C-UNLIM	-40 to 125	86U
TL4050B25QDCKR.A	Active	Production	SC70 (DCK) | 5	3000 | LARGE T&R	Yes	SN	Level-1-260C-UNLIM	-40 to 125	86U
TL4050B41IDBZR	Active	Production	SOT-23 (DBZ) | 3	3000 | LARGE T&R	Yes	NIPDAU | SN	Level-1-260C-UNLIM	-40 to 85	TKMU
TL4050B41IDBZR.A	Active	Production	SOT-23 (DBZ) | 3	3000 | LARGE T&R	Yes	SN	Level-1-260C-UNLIM	-40 to 85	TKMU
TL4050B41IDBZT	Active	Production	SOT-23 (DBZ) | 3	250 | SMALL T&R	Yes	NIPDAU | SN	Level-1-260C-UNLIM	-40 to 85	TKMU
TL4050B41IDBZT.A	Active	Production	SOT-23 (DBZ) | 3	250 | SMALL T&R	Yes	SN	Level-1-260C-UNLIM	-40 to 85	TKMU
TL4050B41IDCKR	Active	Production	SC70 (DCK) | 5	3000 | LARGE T&R	Yes	NIPDAU | SN	Level-1-260C-UNLIM	-40 to 85	8FU
TL4050B41IDCKR.A	Active	Production	SC70 (DCK) | 5	3000 | LARGE T&R	Yes	SN	Level-1-260C-UNLIM	-40 to 85	8FU
TL4050B41IDCKT	Active	Production	SC70 (DCK) | 5	250 | SMALL T&R	Yes	NIPDAU | SN	Level-1-260C-UNLIM	-40 to 85	8FU
TL4050B41IDCKT.A	Active	Production	SC70 (DCK) | 5	250 | SMALL T&R	Yes	SN	Level-1-260C-UNLIM	-40 to 85	8FU
TL4050B41QDBZR	Active	Production	SOT-23 (DBZ) | 3	3000 | LARGE T&R	Yes	NIPDAU | SN	Level-1-260C-UNLIM	-40 to 125	(TKQ3, TKQU)
TL4050B41QDBZR.A	Active	Production	SOT-23 (DBZ) | 3	3000 | LARGE T&R	Yes	SN	Level-1-260C-UNLIM	-40 to 125	(TKQ3, TKQU)
TL4050B41QDBZT	Active	Production	SOT-23 (DBZ) | 3	250 | SMALL T&R	Yes	NIPDAU | SN	Level-1-260C-UNLIM	-40 to 125	(TKQ3, TKQU)
TL4050B41QDBZT.A	Active	Production	SOT-23 (DBZ) | 3	250 | SMALL T&R	Yes	SN	Level-1-260C-UNLIM	-40 to 125	(TKQ3, TKQU)
TL4050B50IDBZR	Active	Production	SOT-23 (DBZ) | 3	3000 | LARGE T&R	Yes	NIPDAU | SN	Level-1-260C-UNLIM	-40 to 85	(TKT3, TKTU)
TL4050B50IDBZR.A	Active	Production	SOT-23 (DBZ) | 3	3000 | LARGE T&R	Yes	SN	Level-1-260C-UNLIM	-40 to 85	(TKT3, TKTU)
TL4050B50IDBZT	Active	Production	SOT-23 (DBZ) | 3	250 | SMALL T&R	Yes	NIPDAU | SN	Level-1-260C-UNLIM	-40 to 85	(TKT3, TKTU)
TL4050B50IDBZT.A	Active	Production	SOT-23 (DBZ) | 3	250 | SMALL T&R	Yes	SN	Level-1-260C-UNLIM	-40 to 85	(TKT3, TKTU)
TL4050B50IDCKR	Active	Production	SC70 (DCK) | 5	3000 | LARGE T&R	Yes	NIPDAU | SN	Level-1-260C-UNLIM	-40 to 85	8MU
TL4050B50IDCKR.A	Active	Production	SC70 (DCK) | 5	3000 | LARGE T&R	Yes	SN	Level-1-260C-UNLIM	-40 to 85	8MU
TL4050B50QDBZR	Active	Production	SOT-23 (DBZ) | 3	3000 | LARGE T&R	Yes	NIPDAU | SN	Level-1-260C-UNLIM	-40 to 125	(TKW3, TKWU)

Orderable part number	Status (1)	Material type (2)	Package | Pins	Package qty | Carrier	RoHS (3)	Lead finish/ Ball material (4)	MSL rating/ Peak reflow (5)	Op temp (°C)	Part marking (6)
TL4050B50QDBZR.A	Active	Production	SOT-23 (DBZ) | 3	3000 | LARGE T&R	Yes	SN	Level-1-260C-UNLIM	-40 to 125	(TKW3, TKWU)
TL4050B50QDCKR	Active	Production	SC70 (DCK) | 5	3000 | LARGE T&R	Yes	NIPDAU | SN	Level-1-260C-UNLIM	-40 to 125	8RU
TL4050B50QDCKR.A	Active	Production	SC70 (DCK) | 5	3000 | LARGE T&R	Yes	SN	Level-1-260C-UNLIM	-40 to 125	8RU
TL4050C10IDBZR	Active	Production	SOT-23 (DBZ) | 3	3000 | LARGE T&R	Yes	NIPDAU	Level-1-260C-UNLIM	-40 to 85	(TK43, TK4U)
TL4050C10IDBZR.A	Active	Production	SOT-23 (DBZ) | 3	3000 | LARGE T&R	Yes	NIPDAU	Level-1-260C-UNLIM	-40 to 85	(TK43, TK4U)
TL4050C10IDBZT	Active	Production	SOT-23 (DBZ) | 3	250 | SMALL T&R	Yes	NIPDAU	Level-1-260C-UNLIM	-40 to 85	(TK43, TK4U)
TL4050C10IDBZT.A	Active	Production	SOT-23 (DBZ) | 3	250 | SMALL T&R	Yes	NIPDAU	Level-1-260C-UNLIM	-40 to 85	(TK43, TK4U)
TL4050C10QDBZR	Active	Production	SOT-23 (DBZ) | 3	3000 | LARGE T&R	Yes	NIPDAU	Level-1-260C-UNLIM	-40 to 125	(TK73, TK7U)
TL4050C10QDBZR.A	Active	Production	SOT-23 (DBZ) | 3	3000 | LARGE T&R	Yes	NIPDAU	Level-1-260C-UNLIM	-40 to 125	(TK73, TK7U)
TL4050C25IDBZR	Active	Production	SOT-23 (DBZ) | 3	3000 | LARGE T&R	Yes	NIPDAU | SN	Level-1-260C-UNLIM	-40 to 85	TKGU
TL4050C25IDBZR.A	Active	Production	SOT-23 (DBZ) | 3	3000 | LARGE T&R	Yes	SN	Level-1-260C-UNLIM	-40 to 85	TKGU
TL4050C25IDBZT	Active	Production	SOT-23 (DBZ) | 3	250 | SMALL T&R	Yes	NIPDAU | SN	Level-1-260C-UNLIM	-40 to 85	TKGU
TL4050C25IDBZT.A	Active	Production	SOT-23 (DBZ) | 3	250 | SMALL T&R	Yes	SN	Level-1-260C-UNLIM	-40 to 85	TKGU
TL4050C25IDCKR	Active	Production	SC70 (DCK) | 5	3000 | LARGE T&R	Yes	NIPDAU | SN	Level-1-260C-UNLIM	-40 to 85	84U
TL4050C25IDCKR.A	Active	Production	SC70 (DCK) | 5	3000 | LARGE T&R	Yes	SN	Level-1-260C-UNLIM	-40 to 85	84U
TL4050C25IDCKT	Active	Production	SC70 (DCK) | 5	250 | SMALL T&R	Yes	NIPDAU | SN	Level-1-260C-UNLIM	-40 to 85	84U
TL4050C25IDCKT.A	Active	Production	SC70 (DCK) | 5	250 | SMALL T&R	Yes	SN	Level-1-260C-UNLIM	-40 to 85	84U
TL4050C25QDBZR	Active	Production	SOT-23 (DBZ) | 3	3000 | LARGE T&R	Yes	NIPDAU | SN	Level-1-260C-UNLIM	-40 to 125	TKKU
TL4050C25QDBZR.A	Active	Production	SOT-23 (DBZ) | 3	3000 | LARGE T&R	Yes	SN	Level-1-260C-UNLIM	-40 to 125	TKKU
TL4050C25QDCKR	Active	Production	SC70 (DCK) | 5	3000 | LARGE T&R	Yes	NIPDAU | SN	Level-1-260C-UNLIM	-40 to 125	87U
TL4050C25QDCKR.A	Active	Production	SC70 (DCK) | 5	3000 | LARGE T&R	Yes	SN	Level-1-260C-UNLIM	-40 to 125	87U
TL4050C41IDBZR	Active	Production	SOT-23 (DBZ) | 3	3000 | LARGE T&R	Yes	NIPDAU | SN	Level-1-260C-UNLIM	-40 to 85	TKNU
TL4050C41IDBZR.A	Active	Production	SOT-23 (DBZ) | 3	3000 | LARGE T&R	Yes	SN	Level-1-260C-UNLIM	-40 to 85	TKNU
TL4050C41IDBZT	Active	Production	SOT-23 (DBZ) | 3	250 | SMALL T&R	Yes	NIPDAU | SN	Level-1-260C-UNLIM	-40 to 85	TKNU
TL4050C41IDBZT.A	Active	Production	SOT-23 (DBZ) | 3	250 | SMALL T&R	Yes	SN	Level-1-260C-UNLIM	-40 to 85	TKNU
TL4050C41IDCKR	Active	Production	SC70 (DCK) | 5	3000 | LARGE T&R	Yes	NIPDAU | SN	Level-1-260C-UNLIM	-40 to 85	8GU
TL4050C41IDCKR.A	Active	Production	SC70 (DCK) | 5	3000 | LARGE T&R	Yes	SN	Level-1-260C-UNLIM	-40 to 85	8GU
TL4050C41QDBZR	Active	Production	SOT-23 (DBZ) | 3	3000 | LARGE T&R	Yes	NIPDAU | SN	Level-1-260C-UNLIM	-40 to 125	TKRU
TL4050C41QDBZR.A	Active	Production	SOT-23 (DBZ) | 3	3000 | LARGE T&R	Yes	SN	Level-1-260C-UNLIM	-40 to 125	TKRU
TL4050C41QDCKR	Active	Production	SC70 (DCK) | 5	3000 | LARGE T&R	Yes	NIPDAU | SN	Level-1-260C-UNLIM	-40 to 125	8KU
TL4050C41QDCKR.A	Active	Production	SC70 (DCK) | 5	3000 | LARGE T&R	Yes	SN	Level-1-260C-UNLIM	-40 to 125	8KU

Orderable part number	Status (1)	Material type (2)	Package | Pins	Package qty | Carrier	RoHS (3)	Lead finish/ Ball material (4)	MSL rating/ Peak reflow (5)	Op temp (°C)	Part marking (6)
TL4050C41QDCKT	Active	Production	SC70 (DCK) | 5	250 | SMALL T&R	Yes	NIPDAU | SN	Level-1-260C-UNLIM	-40 to 125	8KU
TL4050C41QDCKT.A	Active	Production	SC70 (DCK) | 5	250 | SMALL T&R	Yes	SN	Level-1-260C-UNLIM	-40 to 125	8KU
TL4050C50IDBZR	Active	Production	SOT-23 (DBZ) | 3	3000 | LARGE T&R	Yes	NIPDAU | SN	Level-1-260C-UNLIM	-40 to 85	(TKU3, TKUU)
TL4050C50IDBZR.A	Active	Production	SOT-23 (DBZ) | 3	3000 | LARGE T&R	Yes	SN	Level-1-260C-UNLIM	-40 to 85	(TKU3, TKUU)
TL4050C50IDBZT	Active	Production	SOT-23 (DBZ) | 3	250 | SMALL T&R	Yes	NIPDAU | SN	Level-1-260C-UNLIM	-40 to 85	(TKU3, TKUU)
TL4050C50IDBZT.A	Active	Production	SOT-23 (DBZ) | 3	250 | SMALL T&R	Yes	SN	Level-1-260C-UNLIM	-40 to 85	(TKU3, TKUU)
TL4050C50IDCKR	Active	Production	SC70 (DCK) | 5	3000 | LARGE T&R	Yes	NIPDAU | SN	Level-1-260C-UNLIM	-40 to 85	8NU
TL4050C50IDCKR.A	Active	Production	SC70 (DCK) | 5	3000 | LARGE T&R	Yes	SN	Level-1-260C-UNLIM	-40 to 85	8NU
TL4050C50IDCKT	Active	Production	SC70 (DCK) | 5	250 | SMALL T&R	Yes	NIPDAU | SN	Level-1-260C-UNLIM	-40 to 85	8NU
TL4050C50IDCKT.A	Active	Production	SC70 (DCK) | 5	250 | SMALL T&R	Yes	SN	Level-1-260C-UNLIM	-40 to 85	8NU
TL4050C50QDBZR	Active	Production	SOT-23 (DBZ) | 3	3000 | LARGE T&R	Yes	NIPDAU | SN	Level-1-260C-UNLIM	-40 to 125	(TKY3, TKYU)
TL4050C50QDBZR.A	Active	Production	SOT-23 (DBZ) | 3	3000 | LARGE T&R	Yes	SN	Level-1-260C-UNLIM	-40 to 125	(TKY3, TKYU)
TL4050C50QDCKR	Active	Production	SC70 (DCK) | 5	3000 | LARGE T&R	Yes	NIPDAU | SN	Level-1-260C-UNLIM	-40 to 125	8SU
TL4050C50QDCKR.A	Active	Production	SC70 (DCK) | 5	3000 | LARGE T&R	Yes	SN	Level-1-260C-UNLIM	-40 to 125	8SU

(1) **Status:** For more details on status, see our product life cycle.

(2) **Material type:** When designated, preproduction parts are prototypes/experimental devices, and are not yet approved or released for full production. Testing and final process, including without limitation quality assurance, reliability performance testing, and/or process qualification, may not yet be complete, and this item is subject to further changes or possible discontinuation. If available for ordering, purchases will be subject to an additional waiver at checkout, and are intended for early internal evaluation purposes only. These items are sold without warranties of any kind.

(3) **RoHS values:** Yes, No, RoHS Exempt. See the TI RoHS Statement for additional information and value definition.

(4) **Lead finish/Ball material:** Parts may have multiple material finish options. Finish options are separated by a vertical ruled line. Lead finish/Ball material values may wrap to two lines if the finish value exceeds the maximum column width.

(5) **MSL rating/Peak reflow:** The moisture sensitivity level ratings and peak solder (reflow) temperatures. In the event that a part has multiple moisture sensitivity ratings, only the lowest level per JEDEC standards is shown. Refer to the shipping label for the actual reflow temperature that will be used to mount the part to the printed circuit board.

(6) **Part marking:** There may be an additional marking, which relates to the logo, the lot trace code information, or the environmental category of the part.

Multiple part markings will be inside parentheses. Only one part marking contained in parentheses and separated by a "~" will appear on a part. If a line is indented then it is a continuation of the previous line and the two combined represent the entire part marking for that device.

Important Information and Disclaimer: The information provided on this page represents TI's knowledge and belief as of the date that it is provided. TI bases its knowledge and belief on information provided by third parties, and makes no representation or warranty as to the accuracy of such information. Efforts are underway to better integrate information from third parties. TI has taken and continues to take reasonable steps to provide representative and accurate information but may not have conducted destructive testing or chemical analysis on incoming materials and chemicals. TI and TI suppliers consider certain information to be proprietary, and thus CAS numbers and other limited information may not be available for release.

In no event shall TI's liability arising out of such information exceed the total purchase price of the TI part(s) at issue in this document sold by TI to Customer on an annual basis.

TAPE AND REEL INFORMATION

REEL DIMENSIONS

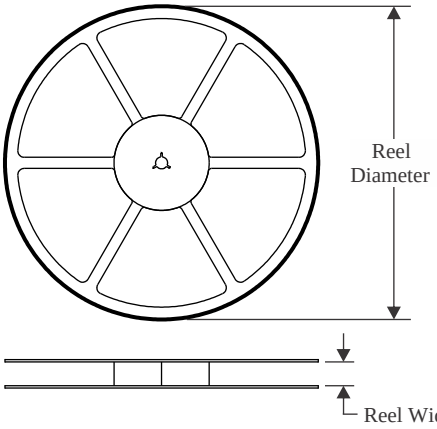

TAPE DIMENSIONS

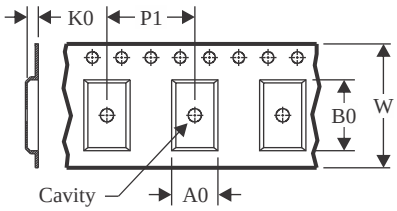

A0	Dimension designed to accommodate the component width
B0	Dimension designed to accommodate the component length
K0	Dimension designed to accommodate the component thickness
W	Overall width of the carrier tape
P1	Pitch between successive cavity centers

QUADRANT ASSIGNMENTS FOR PIN 1 ORIENTATION IN TAPE

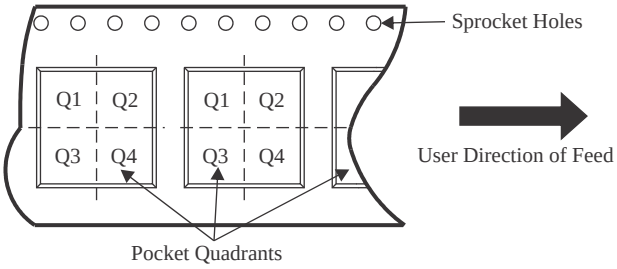

*All dimensions are nominal

Device	Package Type	Package Drawing	Pins	SPQ	Reel Diameter (mm)	Reel Width W1 (mm)	A0 (mm)	B0 (mm)	K0 (mm)	P1 (mm)	W (mm)	Pin1 Quadrant
TL4050A10IDBZR	SOT-23	DBZ	3	3000	179.0	8.4	3.15	2.95	1.22	4.0	8.0	Q3
TL4050A10IDBZT	SOT-23	DBZ	3	250	179.0	8.4	3.15	2.95	1.22	4.0	8.0	Q3
TL4050A10IDCKR	SC70	DCK	5	3000	179.0	8.4	2.2	2.5	1.2	4.0	8.0	Q3
TL4050A10IDCKT	SC70	DCK	5	250	179.0	8.4	2.2	2.5	1.2	4.0	8.0	Q3
TL4050A10QDBZR	SOT-23	DBZ	3	3000	179.0	8.4	3.15	2.95	1.22	4.0	8.0	Q3
TL4050A10QDCKR	SC70	DCK	5	3000	179.0	8.4	2.2	2.5	1.2	4.0	8.0	Q3
TL4050A25IDBZR	SOT-23	DBZ	3	3000	180.0	8.4	3.2	2.85	1.3	4.0	8.0	Q3
TL4050A25IDBZT	SOT-23	DBZ	3	250	180.0	8.4	3.2	2.85	1.3	4.0	8.0	Q3
TL4050A25IDCKR	SC70	DCK	5	3000	180.0	8.4	2.3	2.5	1.2	4.0	8.0	Q3
TL4050A25IDCKR	SC70	DCK	5	3000	179.0	8.4	2.2	2.5	1.2	4.0	8.0	Q3
TL4050A25IDCKT	SC70	DCK	5	250	179.0	8.4	2.2	2.5	1.2	4.0	8.0	Q3
TL4050A25IDCKT	SC70	DCK	5	250	180.0	8.4	2.3	2.5	1.2	4.0	8.0	Q3
TL4050A25QDBZR	SOT-23	DBZ	3	3000	180.0	8.4	3.2	2.85	1.3	4.0	8.0	Q3
TL4050A25QDBZT	SOT-23	DBZ	3	250	180.0	8.4	3.2	2.85	1.3	4.0	8.0	Q3
TL4050A25QDCKR	SC70	DCK	5	3000	179.0	8.4	2.2	2.5	1.2	4.0	8.0	Q3
TL4050A25QDCKR	SC70	DCK	5	3000	180.0	8.4	2.3	2.5	1.2	4.0	8.0	Q3

Device	Package Type	Package Drawing	Pins	SPQ	Reel Diameter (mm)	Reel Width W1 (mm)	A0 (mm)	B0 (mm)	K0 (mm)	P1 (mm)	W (mm)	Pin1 Quadrant
TL4050A41IDBZR	SOT-23	DBZ	3	3000	180.0	8.4	3.2	2.85	1.3	4.0	8.0	Q3
TL4050A41IDBZT	SOT-23	DBZ	3	250	180.0	8.4	3.2	2.85	1.3	4.0	8.0	Q3
TL4050A41QDBZR	SOT-23	DBZ	3	3000	180.0	8.4	3.2	2.85	1.3	4.0	8.0	Q3
TL4050A41QDBZT	SOT-23	DBZ	3	250	180.0	8.4	3.2	2.85	1.3	4.0	8.0	Q3
TL4050A41QDCKR	SC70	DCK	5	3000	179.0	8.4	2.2	2.5	1.2	4.0	8.0	Q3
TL4050A41QDCKR	SC70	DCK	5	3000	180.0	8.4	2.3	2.5	1.2	4.0	8.0	Q3
TL4050A50IDBZR	SOT-23	DBZ	3	3000	180.0	8.4	3.2	2.85	1.3	4.0	8.0	Q3
TL4050A50IDBZT	SOT-23	DBZ	3	250	180.0	8.4	3.2	2.85	1.3	4.0	8.0	Q3
TL4050A50IDCKR	SC70	DCK	5	3000	180.0	8.4	2.3	2.5	1.2	4.0	8.0	Q3
TL4050A50IDCKT	SC70	DCK	5	250	180.0	8.4	2.3	2.5	1.2	4.0	8.0	Q3
TL4050A50QDBZR	SOT-23	DBZ	3	3000	179.0	8.4	3.15	2.95	1.22	4.0	8.0	Q3
TL4050A50QDBZR	SOT-23	DBZ	3	3000	178.0	9.2	3.15	2.77	1.22	4.0	8.0	Q3
TL4050A50QDBZR	SOT-23	DBZ	3	3000	180.0	8.4	3.2	2.85	1.3	4.0	8.0	Q3
TL4050A50QDBZT	SOT-23	DBZ	3	250	180.0	8.4	3.2	2.85	1.3	4.0	8.0	Q3
TL4050A50QDCKR	SC70	DCK	5	3000	180.0	8.4	2.3	2.5	1.2	4.0	8.0	Q3
TL4050B10IDBZR	SOT-23	DBZ	3	3000	179.0	8.4	3.15	2.95	1.22	4.0	8.0	Q3
TL4050B10IDBZT	SOT-23	DBZ	3	250	179.0	8.4	3.15	2.95	1.22	4.0	8.0	Q3
TL4050B10QDBZR	SOT-23	DBZ	3	3000	179.0	8.4	3.15	2.95	1.22	4.0	8.0	Q3
TL4050B10QDBZT	SOT-23	DBZ	3	250	179.0	8.4	3.15	2.95	1.22	4.0	8.0	Q3
TL4050B10QDCKR	SC70	DCK	5	3000	179.0	8.4	2.2	2.5	1.2	4.0	8.0	Q3
TL4050B10QDCKRG4	SC70	DCK	5	3000	179.0	8.4	2.2	2.5	1.2	4.0	8.0	Q3
TL4050B25IDBZR	SOT-23	DBZ	3	3000	180.0	8.4	3.2	2.85	1.3	4.0	8.0	Q3
TL4050B25IDBZT	SOT-23	DBZ	3	250	180.0	8.4	3.2	2.85	1.3	4.0	8.0	Q3
TL4050B25IDCKR	SC70	DCK	5	3000	179.0	8.4	2.2	2.5	1.2	4.0	8.0	Q3
TL4050B25IDCKR	SC70	DCK	5	3000	180.0	8.4	2.3	2.5	1.2	4.0	8.0	Q3
TL4050B25QDBZR	SOT-23	DBZ	3	3000	180.0	8.4	3.2	2.85	1.3	4.0	8.0	Q3
TL4050B25QDCKR	SC70	DCK	5	3000	180.0	8.4	2.3	2.5	1.2	4.0	8.0	Q3
TL4050B25QDCKR	SC70	DCK	5	3000	179.0	8.4	2.2	2.5	1.2	4.0	8.0	Q3
TL4050B41IDBZR	SOT-23	DBZ	3	3000	180.0	8.4	3.2	2.85	1.3	4.0	8.0	Q3
TL4050B41IDBZT	SOT-23	DBZ	3	250	180.0	8.4	3.2	2.85	1.3	4.0	8.0	Q3
TL4050B41IDCKR	SC70	DCK	5	3000	179.0	8.4	2.2	2.5	1.2	4.0	8.0	Q3
TL4050B41IDCKR	SC70	DCK	5	3000	180.0	8.4	2.3	2.5	1.2	4.0	8.0	Q3
TL4050B41IDCKT	SC70	DCK	5	250	179.0	8.4	2.2	2.5	1.2	4.0	8.0	Q3
TL4050B41IDCKT	SC70	DCK	5	250	180.0	8.4	2.3	2.5	1.2	4.0	8.0	Q3
TL4050B41QDBZR	SOT-23	DBZ	3	3000	180.0	8.4	3.2	2.85	1.3	4.0	8.0	Q3
TL4050B41QDBZT	SOT-23	DBZ	3	250	180.0	8.4	3.2	2.85	1.3	4.0	8.0	Q3
TL4050B50IDBZR	SOT-23	DBZ	3	3000	180.0	8.4	3.2	2.85	1.3	4.0	8.0	Q3
TL4050B50IDBZR	SOT-23	DBZ	3	3000	179.0	8.4	3.15	2.95	1.22	4.0	8.0	Q3
TL4050B50IDBZT	SOT-23	DBZ	3	250	180.0	8.4	3.2	2.85	1.3	4.0	8.0	Q3
TL4050B50IDCKR	SC70	DCK	5	3000	180.0	8.4	2.3	2.5	1.2	4.0	8.0	Q3
TL4050B50QDBZR	SOT-23	DBZ	3	3000	180.0	8.4	3.2	2.85	1.3	4.0	8.0	Q3

Device	Package Type	Package Drawing	Pins	SPQ	Reel Diameter (mm)	Reel Width W1 (mm)	A0 (mm)	B0 (mm)	K0 (mm)	P1 (mm)	W (mm)	Pin1 Quadrant
TL4050B50QDCKR	SC70	DCK	5	3000	180.0	8.4	2.3	2.5	1.2	4.0	8.0	Q3
TL4050C10IDBZR	SOT-23	DBZ	3	3000	178.0	9.2	3.15	2.77	1.22	4.0	8.0	Q3
TL4050C10IDBZR	SOT-23	DBZ	3	3000	179.0	8.4	3.15	2.95	1.22	4.0	8.0	Q3
TL4050C10IDBZT	SOT-23	DBZ	3	250	178.0	9.2	3.15	2.77	1.22	4.0	8.0	Q3
TL4050C10IDBZT	SOT-23	DBZ	3	250	179.0	8.4	3.15	2.95	1.22	4.0	8.0	Q3
TL4050C10QDBZR	SOT-23	DBZ	3	3000	179.0	8.4	3.15	2.95	1.22	4.0	8.0	Q3
TL4050C10QDBZR	SOT-23	DBZ	3	3000	178.0	9.2	3.15	2.77	1.22	4.0	8.0	Q3
TL4050C25IDBZR	SOT-23	DBZ	3	3000	180.0	8.4	3.2	2.85	1.3	4.0	8.0	Q3
TL4050C25IDBZT	SOT-23	DBZ	3	250	180.0	8.4	3.2	2.85	1.3	4.0	8.0	Q3
TL4050C25IDCKR	SC70	DCK	5	3000	179.0	8.4	2.2	2.5	1.2	4.0	8.0	Q3
TL4050C25IDCKR	SC70	DCK	5	3000	180.0	8.4	2.3	2.5	1.2	4.0	8.0	Q3
TL4050C25IDCKT	SC70	DCK	5	250	180.0	8.4	2.3	2.5	1.2	4.0	8.0	Q3
TL4050C25IDCKT	SC70	DCK	5	250	179.0	8.4	2.2	2.5	1.2	4.0	8.0	Q3
TL4050C25QDBZR	SOT-23	DBZ	3	3000	180.0	8.4	3.2	2.85	1.3	4.0	8.0	Q3
TL4050C25QDCKR	SC70	DCK	5	3000	179.0	8.4	2.2	2.5	1.2	4.0	8.0	Q3
TL4050C25QDCKR	SC70	DCK	5	3000	180.0	8.4	2.3	2.5	1.2	4.0	8.0	Q3
TL4050C41IDBZR	SOT-23	DBZ	3	3000	180.0	8.4	3.2	2.85	1.3	4.0	8.0	Q3
TL4050C41IDBZT	SOT-23	DBZ	3	250	180.0	8.4	3.2	2.85	1.3	4.0	8.0	Q3
TL4050C41IDCKR	SC70	DCK	5	3000	180.0	8.4	2.3	2.5	1.2	4.0	8.0	Q3
TL4050C41IDCKR	SC70	DCK	5	3000	179.0	8.4	2.2	2.5	1.2	4.0	8.0	Q3
TL4050C41QDBZR	SOT-23	DBZ	3	3000	180.0	8.4	3.2	2.85	1.3	4.0	8.0	Q3
TL4050C41QDCKR	SC70	DCK	5	3000	179.0	8.4	2.2	2.5	1.2	4.0	8.0	Q3
TL4050C41QDCKR	SC70	DCK	5	3000	180.0	8.4	2.3	2.5	1.2	4.0	8.0	Q3
TL4050C41QDCKT	SC70	DCK	5	250	179.0	8.4	2.2	2.5	1.2	4.0	8.0	Q3
TL4050C41QDCKT	SC70	DCK	5	250	180.0	8.4	2.3	2.5	1.2	4.0	8.0	Q3
TL4050C50IDBZR	SOT-23	DBZ	3	3000	179.0	8.4	3.15	2.95	1.22	4.0	8.0	Q3
TL4050C50IDBZR	SOT-23	DBZ	3	3000	178.0	9.2	3.15	2.77	1.22	4.0	8.0	Q3
TL4050C50IDBZR	SOT-23	DBZ	3	3000	180.0	8.4	3.2	2.85	1.3	4.0	8.0	Q3
TL4050C50IDBZT	SOT-23	DBZ	3	250	180.0	8.4	3.2	2.85	1.3	4.0	8.0	Q3
TL4050C50IDCKR	SC70	DCK	5	3000	180.0	8.4	2.3	2.5	1.2	4.0	8.0	Q3
TL4050C50IDCKT	SC70	DCK	5	250	180.0	8.4	2.3	2.5	1.2	4.0	8.0	Q3
TL4050C50QDBZR	SOT-23	DBZ	3	3000	180.0	8.4	3.2	2.85	1.3	4.0	8.0	Q3
TL4050C50QDCKR	SC70	DCK	5	3000	180.0	8.4	2.3	2.5	1.2	4.0	8.0	Q3

TAPE AND REEL BOX DIMENSIONS

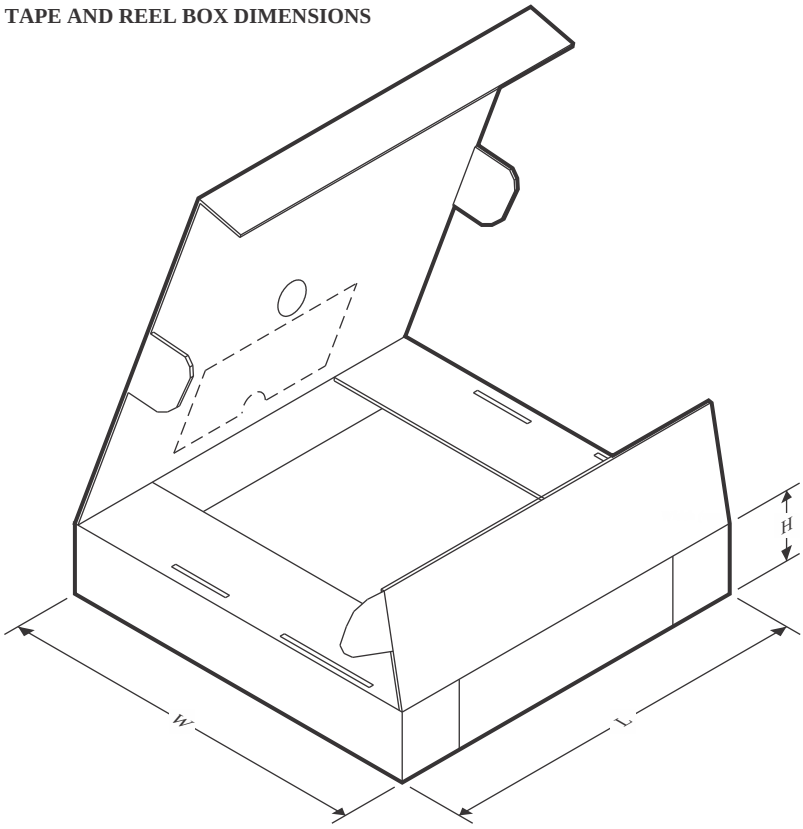

*All dimensions are nominal

Device	Package Type	Package Drawing	Pins	SPQ	Length (mm)	Width (mm)	Height (mm)
TL4050A10IDBZR	SOT-23	DBZ	3	3000	200.0	183.0	25.0
TL4050A10IDBZT	SOT-23	DBZ	3	250	203.0	203.0	35.0
TL4050A10IDCKR	SC70	DCK	5	3000	200.0	183.0	25.0
TL4050A10IDCKT	SC70	DCK	5	250	200.0	183.0	25.0
TL4050A10QDBZR	SOT-23	DBZ	3	3000	200.0	183.0	25.0
TL4050A10QDCKR	SC70	DCK	5	3000	200.0	183.0	25.0
TL4050A25IDBZR	SOT-23	DBZ	3	3000	210.0	185.0	35.0
TL4050A25IDBZT	SOT-23	DBZ	3	250	210.0	185.0	35.0
TL4050A25IDCKR	SC70	DCK	5	3000	210.0	185.0	35.0
TL4050A25IDCKR	SC70	DCK	5	3000	200.0	183.0	25.0
TL4050A25IDCKT	SC70	DCK	5	250	203.0	203.0	35.0
TL4050A25IDCKT	SC70	DCK	5	250	210.0	185.0	35.0
TL4050A25QDBZR	SOT-23	DBZ	3	3000	210.0	185.0	35.0
TL4050A25QDBZT	SOT-23	DBZ	3	250	210.0	185.0	35.0
TL4050A25QDCKR	SC70	DCK	5	3000	203.0	203.0	35.0
TL4050A25QDCKR	SC70	DCK	5	3000	210.0	185.0	35.0
TL4050A41IDBZR	SOT-23	DBZ	3	3000	210.0	185.0	35.0
TL4050A41IDBZT	SOT-23	DBZ	3	250	210.0	185.0	35.0

Device	Package Type	Package Drawing	Pins	SPQ	Length (mm)	Width (mm)	Height (mm)
TL4050A41QDBZR	SOT-23	DBZ	3	3000	210.0	185.0	35.0
TL4050A41QDBZT	SOT-23	DBZ	3	250	210.0	185.0	35.0
TL4050A41QDCKR	SC70	DCK	5	3000	203.0	203.0	35.0
TL4050A41QDCKR	SC70	DCK	5	3000	210.0	185.0	35.0
TL4050A50IDBZR	SOT-23	DBZ	3	3000	210.0	185.0	35.0
TL4050A50IDBZT	SOT-23	DBZ	3	250	210.0	185.0	35.0
TL4050A50IDCKR	SC70	DCK	5	3000	210.0	185.0	35.0
TL4050A50IDCKT	SC70	DCK	5	250	210.0	185.0	35.0
TL4050A50QDBZR	SOT-23	DBZ	3	3000	200.0	183.0	25.0
TL4050A50QDBZR	SOT-23	DBZ	3	3000	180.0	180.0	18.0
TL4050A50QDBZR	SOT-23	DBZ	3	3000	210.0	185.0	35.0
TL4050A50QDBZT	SOT-23	DBZ	3	250	210.0	185.0	35.0
TL4050A50QDCKR	SC70	DCK	5	3000	210.0	185.0	35.0
TL4050B10IDBZR	SOT-23	DBZ	3	3000	200.0	183.0	25.0
TL4050B10IDBZT	SOT-23	DBZ	3	250	203.0	203.0	35.0
TL4050B10QDBZR	SOT-23	DBZ	3	3000	203.0	203.0	35.0
TL4050B10QDBZT	SOT-23	DBZ	3	250	203.0	203.0	35.0
TL4050B10QDCKR	SC70	DCK	5	3000	203.0	203.0	35.0
TL4050B10QDCKRG4	SC70	DCK	5	3000	203.0	203.0	35.0
TL4050B25IDBZR	SOT-23	DBZ	3	3000	210.0	185.0	35.0
TL4050B25IDBZT	SOT-23	DBZ	3	250	210.0	185.0	35.0
TL4050B25IDCKR	SC70	DCK	5	3000	203.0	203.0	35.0
TL4050B25IDCKR	SC70	DCK	5	3000	210.0	185.0	35.0
TL4050B25QDBZR	SOT-23	DBZ	3	3000	210.0	185.0	35.0
TL4050B25QDCKR	SC70	DCK	5	3000	210.0	185.0	35.0
TL4050B25QDCKR	SC70	DCK	5	3000	203.0	203.0	35.0
TL4050B41IDBZR	SOT-23	DBZ	3	3000	210.0	185.0	35.0
TL4050B41IDBZT	SOT-23	DBZ	3	250	210.0	185.0	35.0
TL4050B41IDCKR	SC70	DCK	5	3000	203.0	203.0	35.0
TL4050B41IDCKR	SC70	DCK	5	3000	210.0	185.0	35.0
TL4050B41IDCKT	SC70	DCK	5	250	200.0	183.0	25.0
TL4050B41IDCKT	SC70	DCK	5	250	210.0	185.0	35.0
TL4050B41QDBZR	SOT-23	DBZ	3	3000	210.0	185.0	35.0
TL4050B41QDBZT	SOT-23	DBZ	3	250	210.0	185.0	35.0
TL4050B50IDBZR	SOT-23	DBZ	3	3000	210.0	185.0	35.0
TL4050B50IDBZR	SOT-23	DBZ	3	3000	200.0	183.0	25.0
TL4050B50IDBZT	SOT-23	DBZ	3	250	210.0	185.0	35.0
TL4050B50IDCKR	SC70	DCK	5	3000	210.0	185.0	35.0
TL4050B50QDBZR	SOT-23	DBZ	3	3000	210.0	185.0	35.0
TL4050B50QDCKR	SC70	DCK	5	3000	210.0	185.0	35.0
TL4050C10IDBZR	SOT-23	DBZ	3	3000	180.0	180.0	18.0
TL4050C10IDBZR	SOT-23	DBZ	3	3000	200.0	183.0	25.0
TL4050C10IDBZT	SOT-23	DBZ	3	250	180.0	180.0	18.0

Device	Package Type	Package Drawing	Pins	SPQ	Length (mm)	Width (mm)	Height (mm)
TL4050C10IDBZT	SOT-23	DBZ	3	250	203.0	203.0	35.0
TL4050C10QDBZR	SOT-23	DBZ	3	3000	203.0	203.0	35.0
TL4050C10QDBZR	SOT-23	DBZ	3	3000	180.0	180.0	18.0
TL4050C25IDBZR	SOT-23	DBZ	3	3000	210.0	185.0	35.0
TL4050C25IDBZT	SOT-23	DBZ	3	250	210.0	185.0	35.0
TL4050C25IDCKR	SC70	DCK	5	3000	203.0	203.0	35.0
TL4050C25IDCKR	SC70	DCK	5	3000	210.0	185.0	35.0
TL4050C25IDCKT	SC70	DCK	5	250	210.0	185.0	35.0
TL4050C25IDCKT	SC70	DCK	5	250	203.0	203.0	35.0
TL4050C25QDBZR	SOT-23	DBZ	3	3000	210.0	185.0	35.0
TL4050C25QDCKR	SC70	DCK	5	3000	203.0	203.0	35.0
TL4050C25QDCKR	SC70	DCK	5	3000	210.0	185.0	35.0
TL4050C41IDBZR	SOT-23	DBZ	3	3000	210.0	185.0	35.0
TL4050C41IDBZT	SOT-23	DBZ	3	250	210.0	185.0	35.0
TL4050C41IDCKR	SC70	DCK	5	3000	210.0	185.0	35.0
TL4050C41IDCKR	SC70	DCK	5	3000	200.0	183.0	25.0
TL4050C41QDBZR	SOT-23	DBZ	3	3000	210.0	185.0	35.0
TL4050C41QDCKR	SC70	DCK	5	3000	203.0	203.0	35.0
TL4050C41QDCKR	SC70	DCK	5	3000	210.0	185.0	35.0
TL4050C41QDCKT	SC70	DCK	5	250	203.0	203.0	35.0
TL4050C41QDCKT	SC70	DCK	5	250	210.0	185.0	35.0
TL4050C50IDBZR	SOT-23	DBZ	3	3000	200.0	183.0	25.0
TL4050C50IDBZR	SOT-23	DBZ	3	3000	180.0	180.0	18.0
TL4050C50IDBZR	SOT-23	DBZ	3	3000	210.0	185.0	35.0
TL4050C50IDBZT	SOT-23	DBZ	3	250	210.0	185.0	35.0
TL4050C50IDCKR	SC70	DCK	5	3000	210.0	185.0	35.0
TL4050C50IDCKT	SC70	DCK	5	250	210.0	185.0	35.0
TL4050C50QDBZR	SOT-23	DBZ	3	3000	210.0	185.0	35.0
TL4050C50QDCKR	SC70	DCK	5	3000	210.0	185.0	35.0

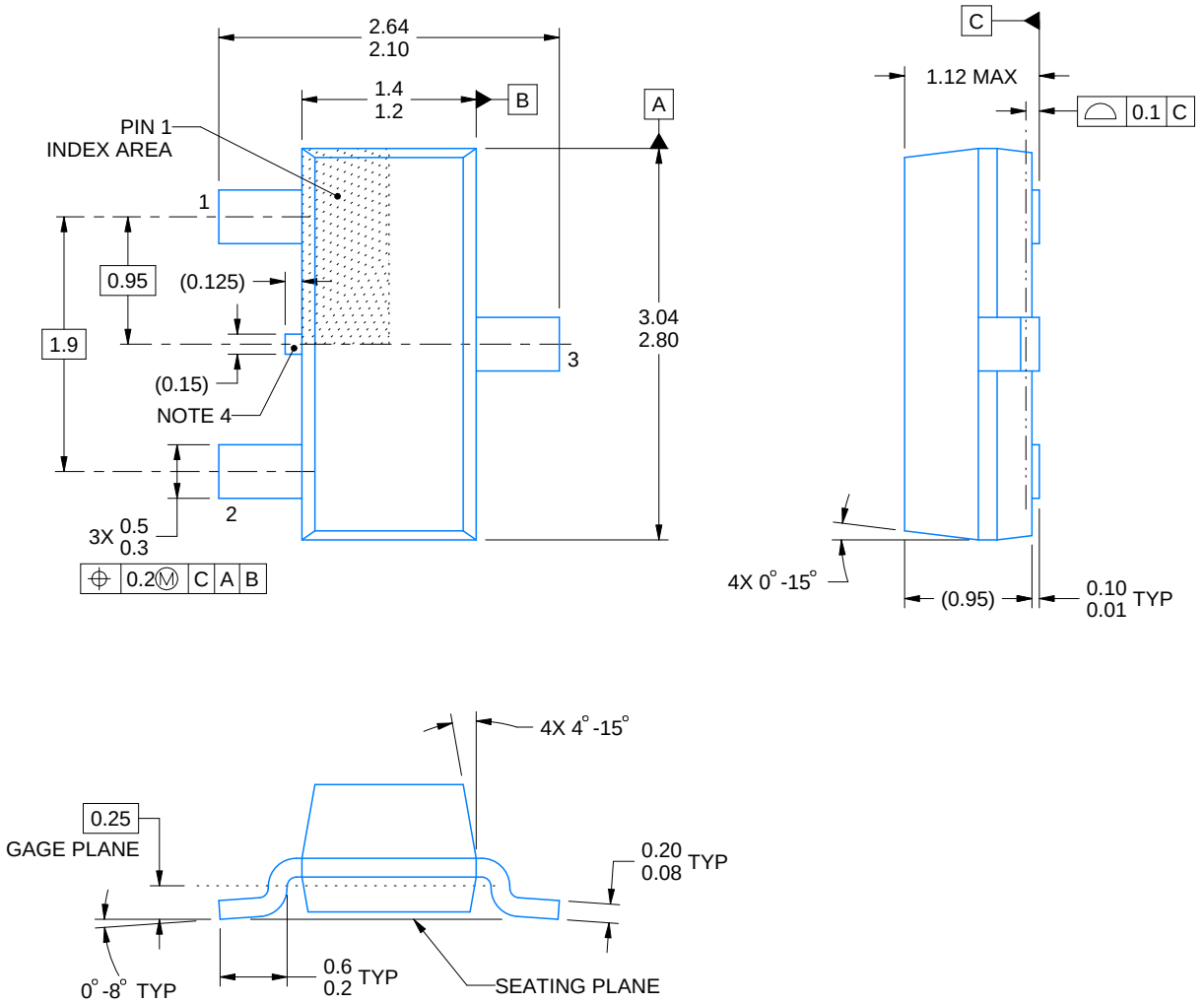

4214838/F 08/2024

NOTES:

1. All linear dimensions are in millimeters. Any dimensions in parenthesis are for reference only. Dimensioning and tolerancing per ASME Y14.5M.
2. This drawing is subject to change without notice.
3. Reference JEDEC registration TO-236, except minimum foot length.
4. Support pin may differ or may not be present.
5. Body dimensions do not include mold flash, protrusions, or gate burrs. Mold flash, protrusions, or gate burrs shall not exceed 0.25mm per side

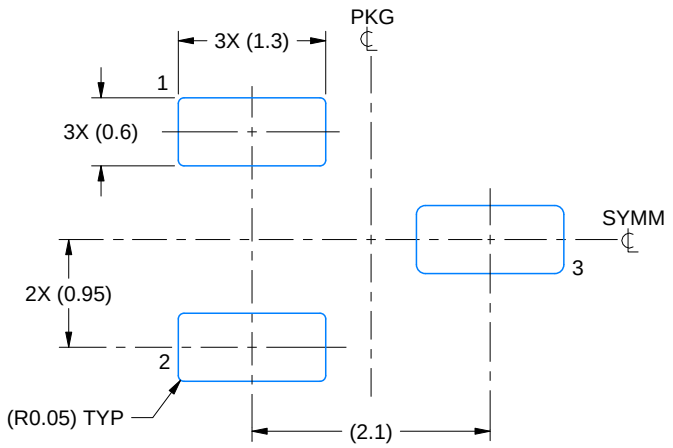

LAND PATTERN EXAMPLE
SCALE:15X

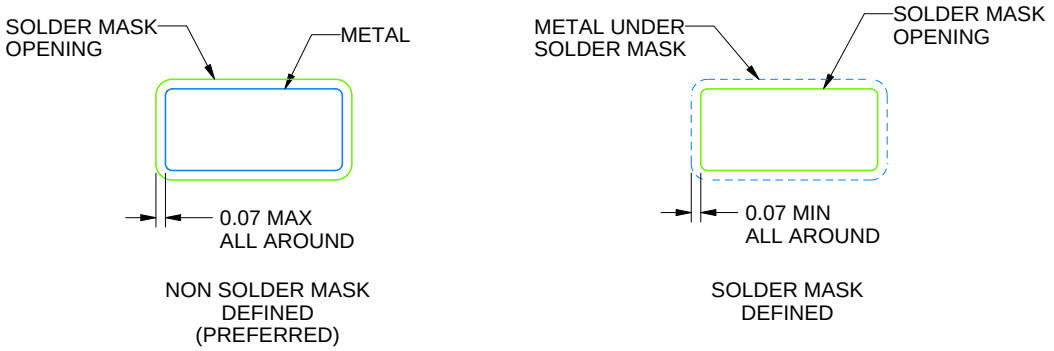

SOLDER MASK DETAILS

4214838/F 08/2024

NOTES: (continued)

5. Publication IPC-7351 may have alternate designs.
6. Solder mask tolerances between and around signal pads can vary based on board fabrication site.

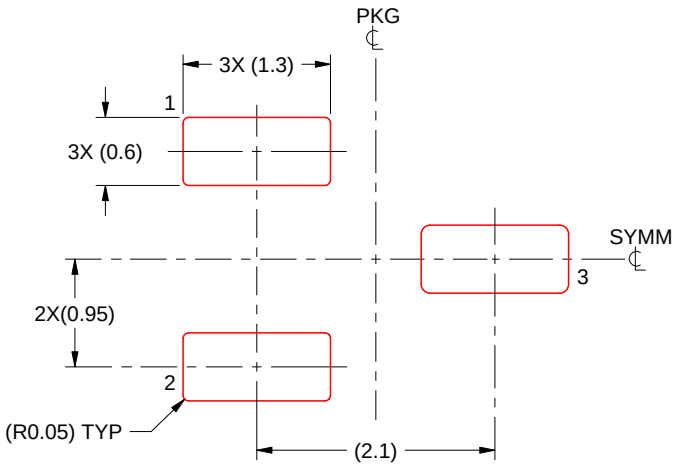

SOLDER PASTE EXAMPLE
BASED ON 0.125 THICK STENCIL
SCALE:15X

4214838/F 08/2024

NOTES: (continued)

7. Laser cutting apertures with trapezoidal walls and rounded corners may offer better paste release. IPC-7525 may have alternate design recommendations.
8. Board assembly site may have different recommendations for stencil design.

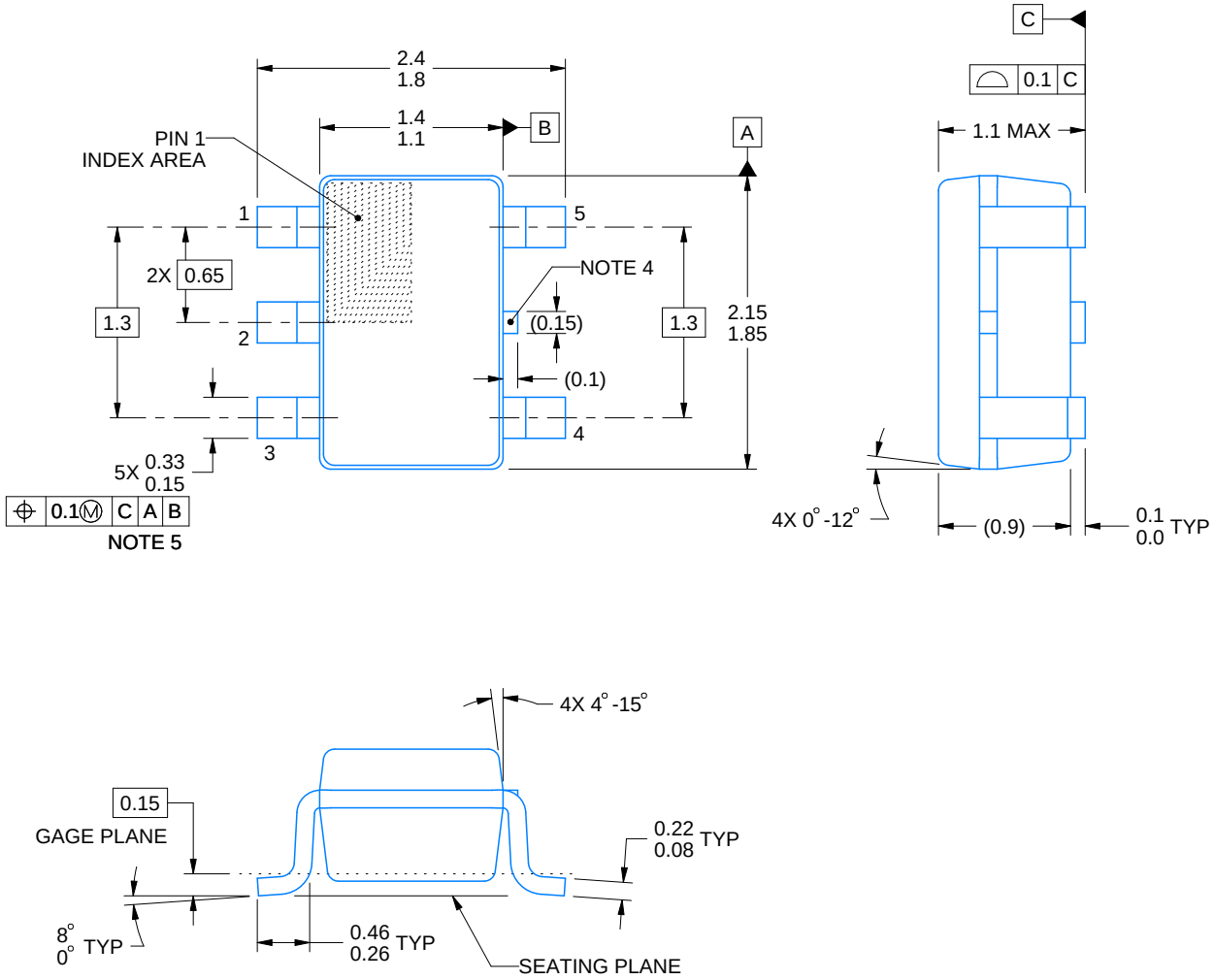

NOTES:

1. All linear dimensions are in millimeters. Any dimensions in parenthesis are for reference only. Dimensioning and tolerancing per ASME Y14.5M.
2. This drawing is subject to change without notice.
3. Refernce JEDEC MO-203.
4. Support pin may differ or may not be present.
5. Lead width does not comply with JEDEC.
6. Body dimensions do not include mold flash, protrusions, or gate burrs. Mold flash, protrusions, or gate burrs shall not exceed 0.25mm per side

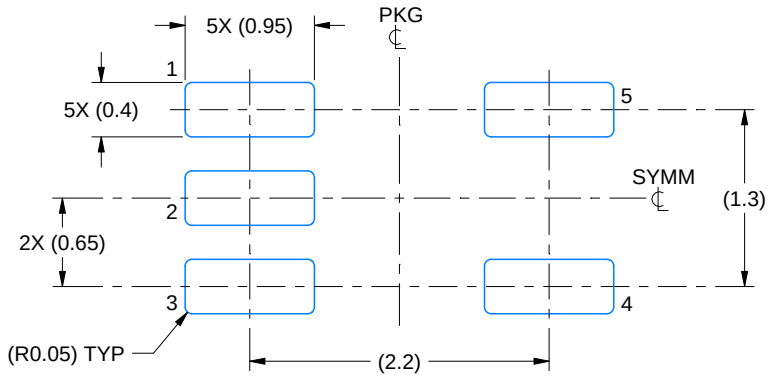

LAND PATTERN EXAMPLE
EXPOSED METAL SHOWN
SCALE:18X

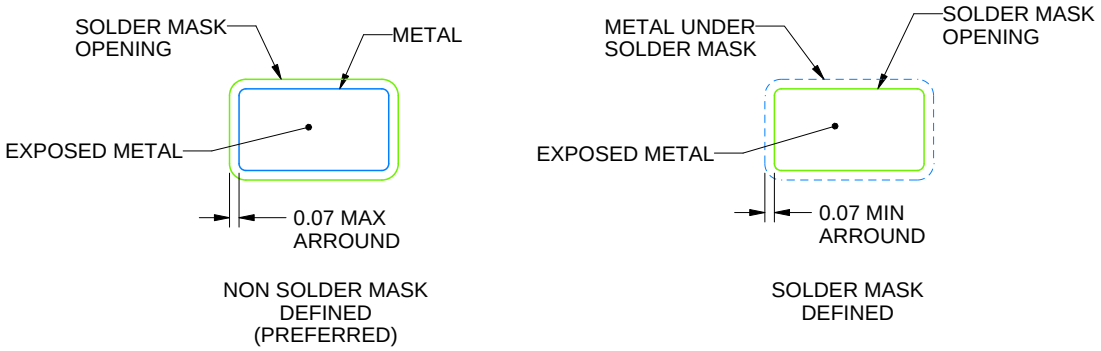

SOLDER MASK DETAILS

4214834/G 11/2024

NOTES: (continued)

7. Publication IPC-7351 may have alternate designs.
8. Solder mask tolerances between and around signal pads can vary based on board fabrication site.

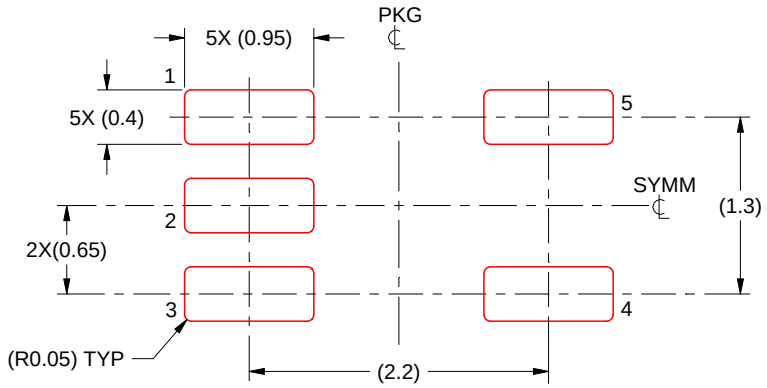

SOLDER PASTE EXAMPLE
BASED ON 0.125 THICK STENCIL
SCALE:18X

4214834/G 11/2024

NOTES: (continued)

9. Laser cutting apertures with trapezoidal walls and rounded corners may offer better paste release. IPC-7525 may have alternate design recommendations.
10. Board assembly site may have different recommendations for stencil design.

IMPORTANT NOTICE AND DISCLAIMER

TI PROVIDES TECHNICAL AND RELIABILITY DATA (INCLUDING DATASHEETS), DESIGN RESOURCES (INCLUDING REFERENCE DESIGNS), APPLICATION OR OTHER DESIGN ADVICE, WEB TOOLS, SAFETY INFORMATION, AND OTHER RESOURCES “AS IS” AND WITH ALL FAULTS, AND DISCLAIMS ALL WARRANTIES, EXPRESS AND IMPLIED, INCLUDING WITHOUT LIMITATION ANY IMPLIED WARRANTIES OF MERCHANTABILITY, FITNESS FOR A PARTICULAR PURPOSE OR NON-INFRINGEMENT OF THIRD PARTY INTELLECTUAL PROPERTY RIGHTS.

These resources are intended for skilled developers designing with TI products. You are solely responsible for (1) selecting the appropriate TI products for your application, (2) designing, validating and testing your application, and (3) ensuring your application meets applicable standards, and any other safety, security, regulatory or other requirements.

These resources are subject to change without notice. TI grants you permission to use these resources only for development of an application that uses the TI products described in the resource. Other reproduction and display of these resources is prohibited. No license is granted to any other TI intellectual property right or to any third party intellectual property right. TI disclaims responsibility for, and you fully indemnify TI and its representatives against any claims, damages, costs, losses, and liabilities arising out of your use of these resources.

TI’s products are provided subject to TI’s Terms of Sale, TI’s General Quality Guidelines, or other applicable terms available either on ti.com or provided in conjunction with such TI products. TI’s provision of these resources does not expand or otherwise alter TI’s applicable warranties or warranty disclaimers for TI products. Unless TI explicitly designates a product as custom or customer-specified, TI products are standard, catalog, general purpose devices.

TI objects to and rejects any additional or different terms you may propose.

Copyright © 2025, Texas Instruments Incorporated

Last updated 10/2025