T E X A S I N S T R U M E N T S

IMPORTANT NOTICE

Texas Instruments Incorporated and its subsidiaries (TI) reserve the right to make corrections, enhancements, improvements and other changes to its semiconductor products and services per JESD46C and to discontinue any product or service per JESD48B. Buyers should obtain the latest relevant information before placing orders and should verify that such information is current and complete. All semiconductor products (also referred to herein as "components") are sold subject to TI's terms and conditions of sale supplied at the time of order acknowledgment.

TI warrants performance of its components to the specifications applicable at the time of sale, in accordance with the warranty in TI's terms and conditions of sale of semiconductor products. Testing and other quality control techniques are used to the extent TI deems necessary to support this warranty. Except where mandated by applicable law, testing of all parameters of each component is not necessarily performed.

TI assumes no liability for applications assistance or the design of Buyers' products. Buyers are responsible for their products and applications using TI components. To minimize the risks associated with Buyers' products and applications, Buyers should provide adequate design and operating safeguards.

TI does not warrant or represent that any license, either express or implied, is granted under any patent right, copyright, mask work right, or other intellectual property right relating to any combination, machine, or process in which TI components or services are used. Information published by TI regarding third-party products or services does not constitute a license to use such products or services or a warranty or endorsement thereof. Use of such information may require a license from a third party under the patents or other intellectual property of the third party, or a license from TI under the patents or other intellectual property of TI.

Reproduction of significant portions of TI information in TI data books or data sheets is permissible only if reproduction is without alteration and is accompanied by all associated warranties, conditions, limitations, and notices. TI is not responsible or liable for such altered documentation. Information of third parties may be subject to additional restrictions. Resale of TI components or services with statements different from or beyond the parameters stated by TI for that component or service voids all express and any implied warranties for the associated TI component or service and is an unfair and deceptive business practice.

TI is not responsible or liable for any such statements. Buyer acknowledges and agrees that it is solely responsible for compliance with all legal, regulatory and safety-related requirements concerning its products, and any use of TI components in its applications, notwithstanding any applications-related information or support that may be provided by TI. Buyer represents and agrees that it has all the necessary expertise to create and implement safeguards which anticipate dangerous consequences of failures, monitor failures and their consequences, lessen the likelihood of failures that might cause harm and take appropriate remedial actions. Buyer will fully indemnify TI and its representatives against any damages arising out of the use of any TI components in safety-critical applications. In some cases, TI components may be promoted specifically to facilitate safety-related applications. With such components, TI's goal is to help enable customers to design and create their own end-product solutions that meet applicable functional safety standards and requirements. Nonetheless, such components are subject to these terms. No TI components are authorized for use in FDA Class III (or similar life-critical medical equipment) unless authorized officers of the parties have executed a special agreement specifically governing such use.

Only those TI components which TI has specifically designated as military grade or "enhanced plastic" are designed and intended for use in military/aerospace applications or environments. Buyer acknowledges and agrees that any military or aerospace use of TI components which have not been so designated is solely at the Buyer's risk, and that Buyer is solely responsible for compliance with all legal and regulatory requirements in connection with such use.

TI has specifically designated certain components which meet ISO/TS16949 requirements, mainly for automotive use. Components which have not been so designated are neither designed nor intended for automotive use; and TI will not be responsible for any failure of such components to meet such requirements.

REV	DESCRIPTION	ECN	DATE	APPROVAL
A	INITIAL RELEASE			TC LIEW

MAX TESTING VOLTAGE IN RANGE OF

LESS THAN 50V D.C.

50V D.C. TO LESS THAN 120V D.C (PUT ON YELLOW AMARAN STICKER)

120V D.C. AND ABOVE (PUT ON RED BAHAYA STICKER)

Please be aware that an important notice concerning availability, standard warranty, and use in critical applications of Texas Instruments semiconductor products and disclaimers thereto appears at the first page of this document

COMPANY PRIVATE

THIS DOCUMENT IS UNCONTROLLED UNLESS IT IS PART OF A DCB/TOC OR IS VIEW ON LINE.

	NAME	SIGNATURE	DATE
DRAWN	Medical Imaging	Group	30 DEC 10
ENGINEER	<ENGINEER>		
APPROVED	SC/EM		

NATIONAL SEMICONDUCTOR TM

CONFIDENTIAL NDA REQUIRED

REVISION SHEET

Power Module - Board 1

B PART NAME : PM_TX_SDK_V1 A

SHEET 1 OF <TOTAL_DESIGN_SHEETS> REV.

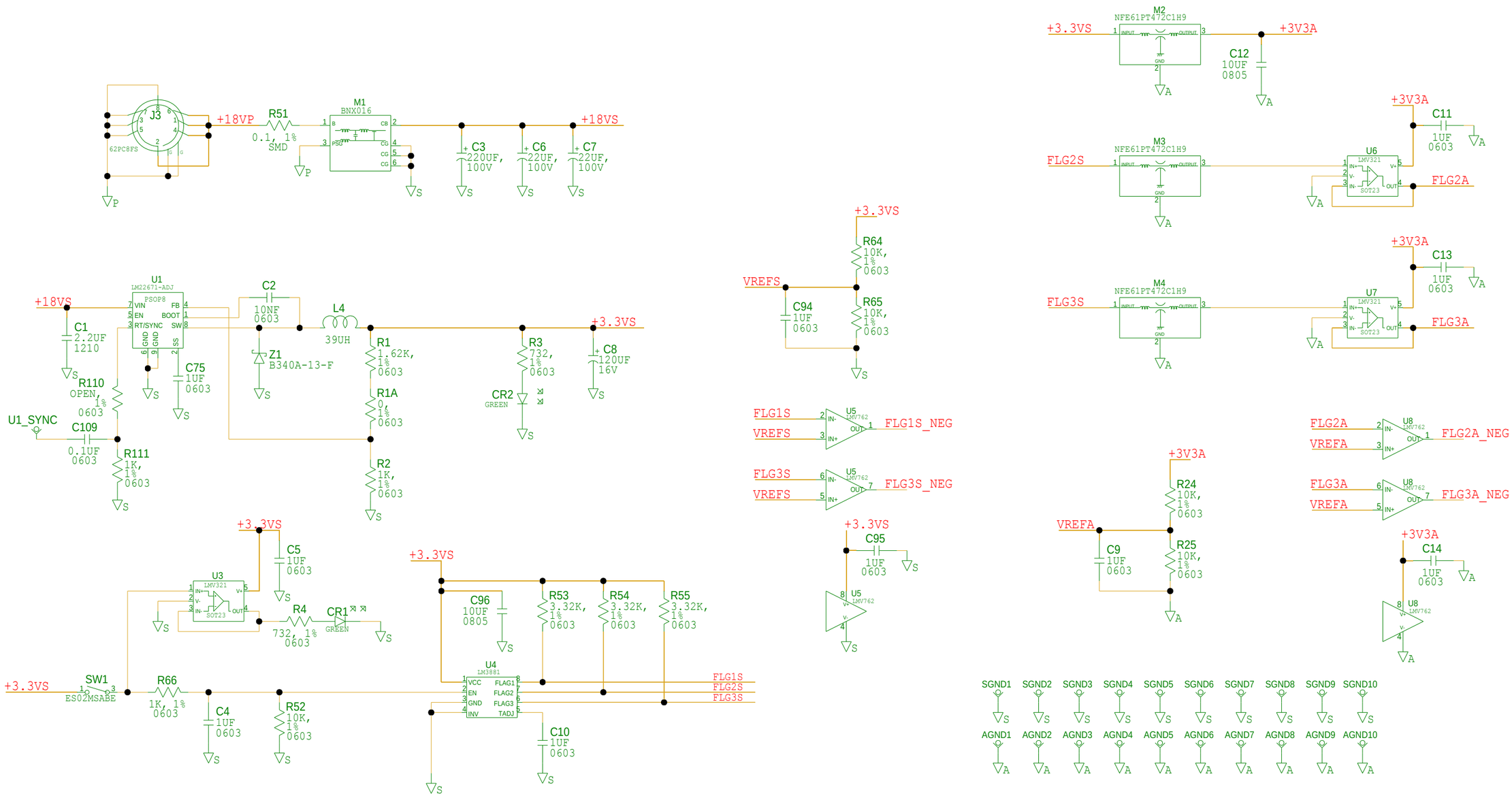

Please be aware that an important notice concerning availability, standard warranty, and use in critical applications of Texas Instruments semiconductor products and disclaimers thereto appears at the first page of this document.

COMPANY PRIVATE

THIS DOCUMENT IS UNCONTROLLED UNLESS IT IS PART OF A DCB/TOC OR IS VIEW ON LINE.

NAME	SIGNATURE	DATE
DRAWN Medical Imaging Group		30 DEC 10
ENGINEER <ENGINEER>		
APPROVED SC/EM		

NATIONAL SEMICONDUCTOR SDN. BHD. MALACCA TM

Power Module - Board 1

B | PART NAME : PM_TX_SDK_V1 | A

SHEET <CURRENT_DESIGN_SHEETS> OF <TOTAL_DESIGN_SHEETS> REV.

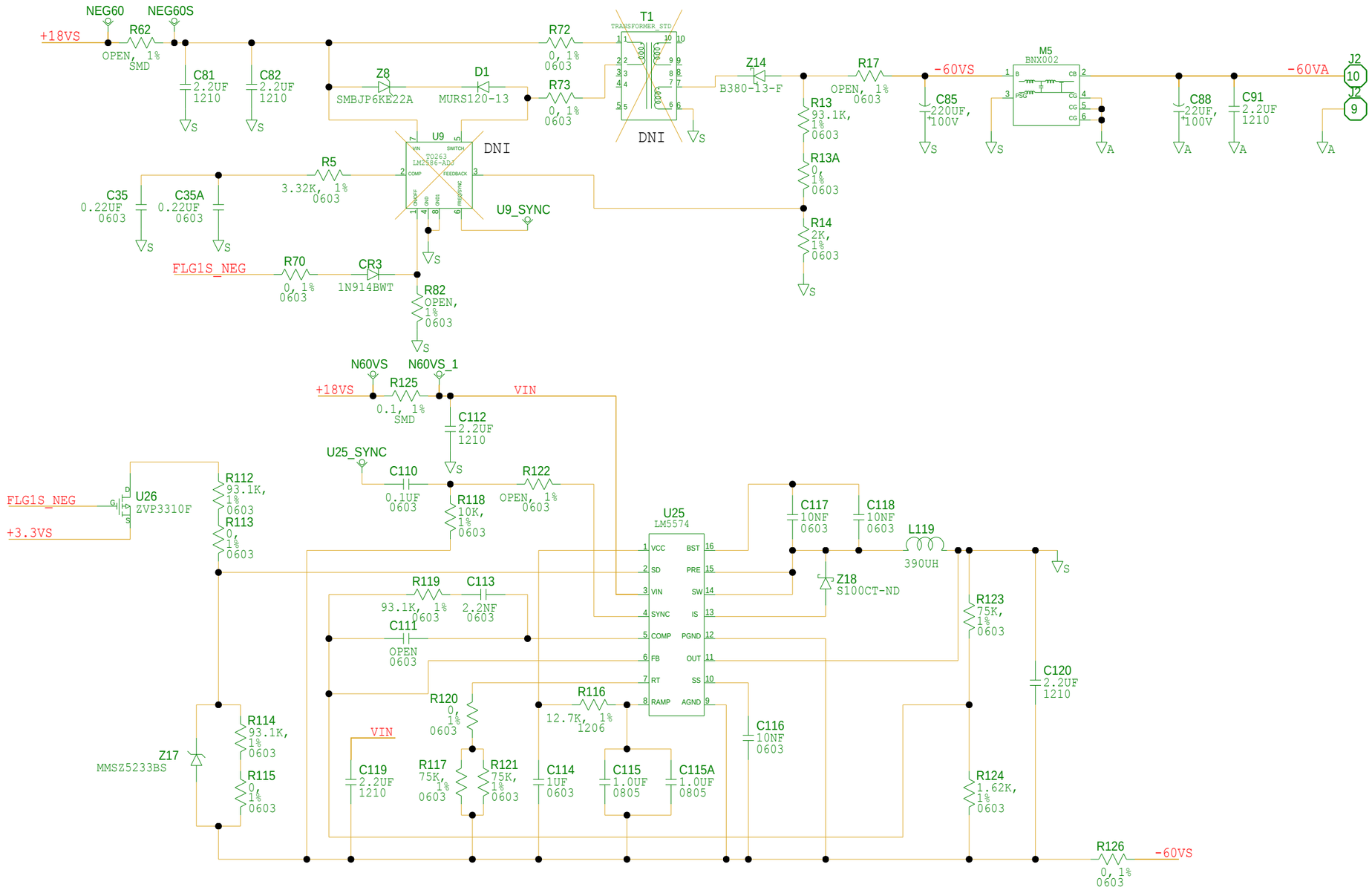

Please be aware that an important notice concerning availability, standard warranty, and use in critical applications of Texas Instruments semiconductor products and disclaimers thereto appears at the first page of this document.

COMPANY PRIVATE

THIS DOCUMENT IS UNCONTROLLED UNLESS IT IS PART OF A DCB/TOC OR IS VIEW ON LINE.

NAME	SIGNATURE	DATE
DRAWN Medical Imaging Group		30 DEC 10
ENGINEER <ENGINEER>		
APPROVED SC/EM		

NATIONAL SEMICONDUCTOR SDN. BHD. MALACCA TM

Power Module - Board 1

B | PART NAME : PM_TX_SDK_V1 | A

SHEET <CURRENT_DESIGN_SHEETS> OF <TOTAL_DESIGN_SHEETS> REV

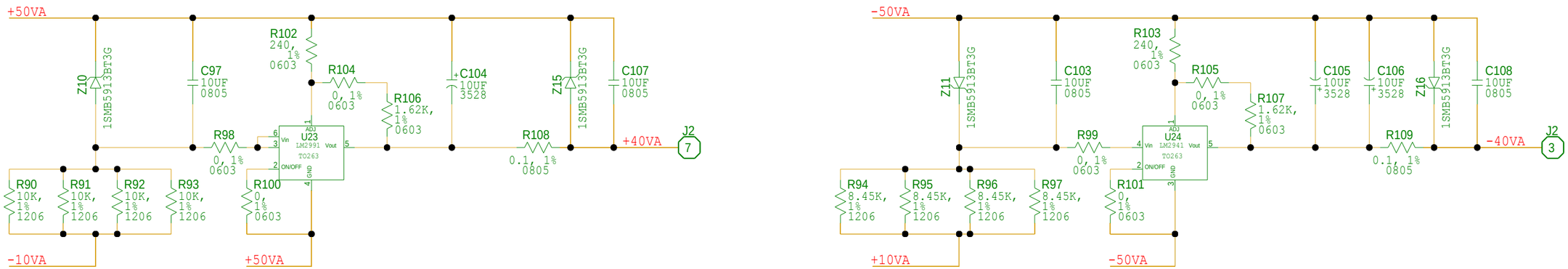

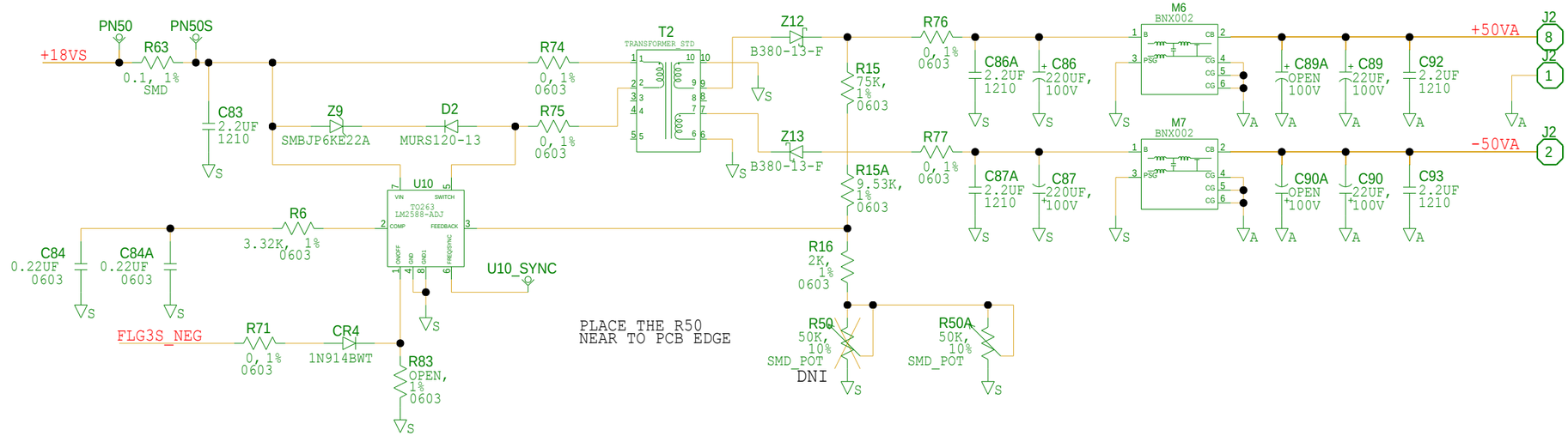

PLACE THE R50
NEAR TO PCB EDGE

Please be aware that an important notice concerning availability, standard warranty, and use in critical applications of Texas Instruments semiconductor products and disclaimers thereto appears at the first page of this document.

COMPANY PRIVATE

THIS DOCUMENT IS UNCONTROLLED UNLESS
IT IS PART OF A DCB/TOC OR IS VIEW ON LINE.

NAME	SIGNATURE	DATE
DRAWN Medical Imaging Group		30 DEC 10
ENGINEER <ENGINEER>		
APPROVED SC/EM		

NATIONAL SEMICONDUCTOR TM
SDN. BHD. MALACCA

Power Module - Board 1

B | PART NAME : PM_TX_SDK_V1 | A

SHEET <CURRENT_DESIGN_SHEET> <TOTAL_DESIGN_SHEETS> REV

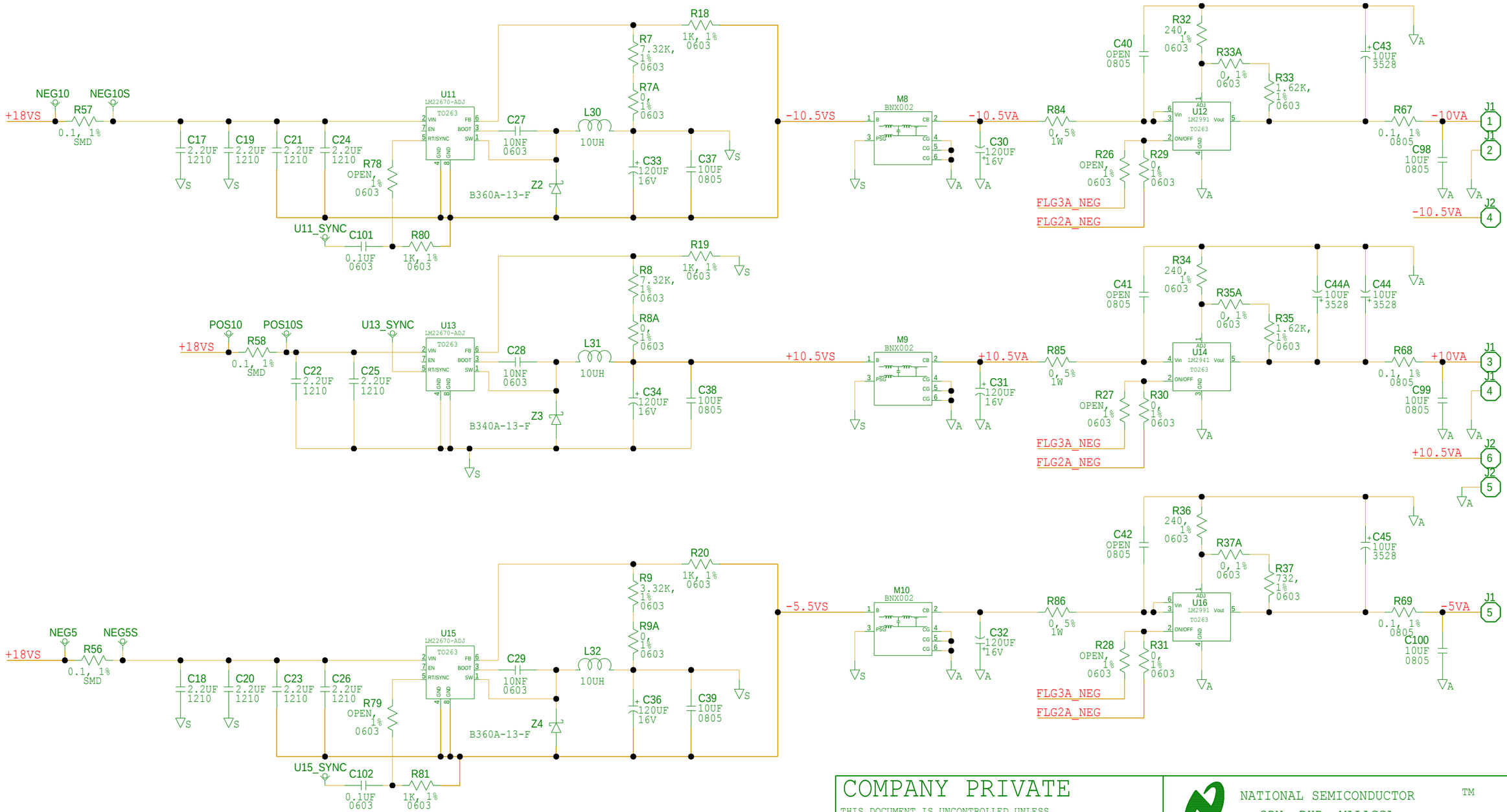

Please be aware that an important notice concerning availability, standard warranty, and use in critical applications of Texas Instruments semiconductor products and disclaimers thereto appears at the first page of this document.

COMPANY PRIVATE

THIS DOCUMENT IS UNCONTROLLED UNLESS IT IS PART OF A DCB/TOC OR IS VIEW ON LINE.

NAME	SIGNATURE	DATE
DRAWN Medical Imaging Group		30 DEC 10
ENGINEER <ENGINEER>		
APPROVED SC/EM		

NATIONAL SEMICONDUCTOR SDN. BHD. MALACCA TM

Power Module - Board 1

B | PART NAME : PM_TX_SDK_V1 | A

SHEET <CURRENT_DESIGN_SHEETS> OF <TOTAL_DESIGN_SHEETS> REV

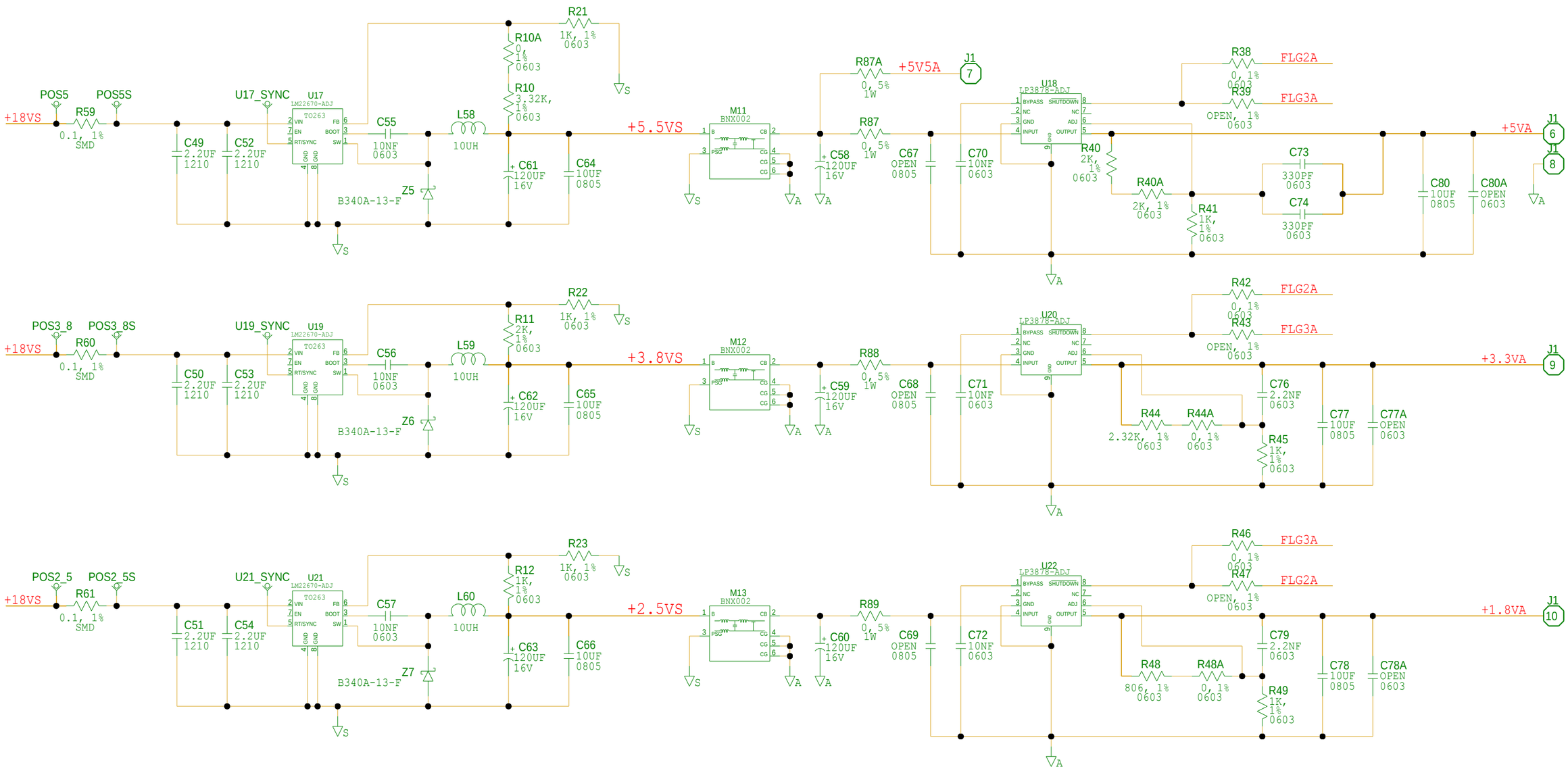

Please be aware that an important notice concerning availability, standard warranty, and use in critical applications of Texas Instruments semiconductor products and disclaimers thereto appears at the first page of this document

.

COMPANY PRIVATE

THIS DOCUMENT IS UNCONTROLLED UNLESS IT IS PART OF A DCB/TOC OR IS VIEW ON LINE.

NAME	SIGNATURE	DATE
DRAWN Medical Imaging Group		30 DEC 10
ENGINEER <ENGINEER>		
APPROVED SC/EM		

NATIONAL SEMICONDUCTOR SDN. BHD. MALACCA TM

Power Module - Board 1

B | PART NAME : PM_TX_SDK_V1 | A

SHEET <CURRENT_DESIGN_SHEETS> OF <TOTAL_DESIGN_SHEETS> REV.

TITLE: Bill of Materials
DATE: 12/30/2010
DESIGN: power_module
TEMPLATE: /home/Development/PM_TX_SDK_V1/worklib/power_module/bom/embom_template101022.bom
CALLOUT: /home/Development/power_module/bom.callouts

NO.	VALUE\PART NO.	REF DES	POWER	TOL	QTY	DESCRIPTION	PART NUMBER	MANUFACTURER	BOM_PART
1	0 OHM	R84-R89,R87A	1W	5%	7	-	MCR100JZHJ000	Rohm Semiconductor	COM_SMD_5PERCENT_2512-SMD_SIZE2512 ,0,,5%,1W,ROHM SEMICONDUCTOR,MCR100JZHJ000
2	0 Ohm	R1A,R29-R31,R38,R42,R46, R70-R77,R7A-R10A,R98-R101, R104,R105,R113,R115,R120, R126,R13A,R33A,R35A,R37A, R44A,R48A	1/16W	1%	35	Thick film chip resistor, size 0603	0 Ohm	Panasonic	COM_SMD_1PERCENT_0603-SMD_SIZE0603 ,0,,1%,1/16W,,
3	0.1 OHM	R51,R56-R61,R63,R125	3W	1%	9	High Power Current Sense Chip Resistor, size 2512	CRA2512-FZ-R100 ELF	BOURNS	COM_SMD_1PERCENT_SMD-SMD_CRA2512, 0.1,,1%,3W,BOURNS, CRA2512-FZ-R100ELF
4	0.1 OHM	R67-R69,R108,R109	1/4W	1%	5	Thick film chip resistor, size 0805	MCR10EZHFLR100	Rohm Semiconductor	COM_SMD_1PERCENT_0805-SMD_SIZE0805 ,0.1,,1%,1/4W,,
5	0.1uF	C110	50V	10%	1	Multilayer Ceramic Chip Capacitors, size 0603	C1608X7R1H104K	TDK Corporation	EM_SMD_CERAMIC_0603-SMD_SIZE0603, 0.1UF,50V,TDK CORPORATION,C1608X7R1H104K
6	0.1uf	C101,C102,C109	16V	10%	3	0.1uF,16V	XR0603CTTD104K	KOA	EM_SMD_CERAMIC_0603-SMD_SIZE0603, 0.1UF,16V,-,XR0603CTTD104K
7	0.22uF	C35,C84,C35A,C84A	50V	-20/+80	4	Monolithic Chip Capacitor, size 0603	GRM188F51H224ZA01D	Murata	EM_SMD_CERAMIC_0603-SMD_SIZE0603, 0.22UF,50V,MURATA, GRM188F51H224ZA01D
8	1.00K	R2,R12,R18-R23,R41,R45, R49,R66,R80,R81,R111	1/16W	1%	15	Thick film chip resistor, size 0603	1K	Panasonic	COM_SMD_1PERCENT_0603-SMD_SIZE0603 ,1K,,1%,1/16W,,
9	1.0uF	C115,C115A	50V	10%	2	1.0uF, 50V,ceremic capacitor, size 0805	1.0uF	Kemet	EM_SMD_CERAMIC_0805-SMD_SIZE0805, 1.0UF,50V,,
10	1.62K	R1,R33,R35,R106,R107,R124	1/10W	1%	6	Thick film chip resistor, size 0603	MCR03EZPFX1621	Rohm Semiconductor	COM_SMD_1PERCENT_0603-SMD_SIZE0603 ,1.62K,,1%,1/10W,,
11	1N914BWT	CR3,CR4	-	-	2	High Conductance Fast Switching Diode	1N914BWT	Fairchild Semiconductor	COM_1N914_SMD-DIODE_SOD523F, 1N914BWT
12	1SMB5913BT3G	Z10,Z11,Z15,Z16	-	-	4	3 Watt Plastic Surface Mount Zener Voltage Regulators	1SMB5913BT3G	ON Semiconductor	ZENER_DIODE_SMD-DIODE_SMB403A_03, 1SMB5913BT3G,1SMB5913BT3G
13	1uF	C4,C5,C9-C11,C13,C14,C75, C94,C95,C114	16V	10%	11	Multilayer Ceramic Chip Capacitors, size 0603	C1608X5R1C105K	TDK Corporation	EM_SMD_CERAMIC_0603-SMD_SIZE0603, 1UF,16V,TDK CORPORATION,C1608X5R1C105K
14	2.00K	R11,R14,R16,R40,R40A	1/16W	1%	5	Thick film chip resistor, size 0603	2K	Panasonic	COM_SMD_1PERCENT_0603-SMD_SIZE0603 ,2K,,1%,1/16W,,
15	2.2nF	C76,C79,C113	16V	10%	3	X7R Dielectric Chip Capacitor, size 0603	0603YC222KAT2A	AVX	EM_SMD_CERAMIC_0603-SMD_SIZE0603, 2.2NF,16V,AVX,0603YC222KAT2A
16	2.2uF	C1,C17-C26,C49-C54, C81-C83,C91-C93,C112,C119, C120,C86A,C87A	100V	10%	28	Monolithic Ceramic Capacitor, size 1210	2.2uF	Murata	EM_SMD_CERAMIC_1210-SMD_SIZE1210, 2.2UF,100V,MURATA,-
17	2.32K	R44	1/10W	1%	1	Thick film chip resistor, size 0603	MCR03EZPFX2321	Rohm Semiconductor	COM_SMD_1PERCENT_0603-SMD_SIZE0603 ,2.32K,,1%,1/10W,,
18	3.32K	R5,R6,R9,R10,R53-R55	1/16W	1%	7	Thick film chip resistor, size 0603	3.32K	Panasonic	COM_SMD_1PERCENT_0603-SMD_SIZE0603 ,3.32K,,1%,1/16W,,
19	7.32K	R7,R8	1/10W	1%	2	Thick film chip resistor, size 0603	MCR03EZPFX7321	Rohm Semiconductor	COM_SMD_1PERCENT_0603-SMD_SIZE0603 ,7.32K,,1%,1/10W,,
20	8.45K	R94-R97	1/8W	1%	4	Thick film chip resistor, size 1206	8.45K	Panasonic	COM_SMD_1PERCENT_1206-SMD_SIZE1206 ,8.45K,,1%,1/8W,,
21	9.53K	R15A	1/16W	1%	1	Thick film chip resistor, size 0603	9.53K	Panasonic	COM_SMD_1PERCENT_0603-SMD_SIZE0603 ,9.53K,,1%,1/16W,,
22	10K	R24,R25,R52,R64,R65,R118	1/16W	1%	6	Thick film chip resistor, size 0603	10K	Panasonic	COM_SMD_1PERCENT_0603-SMD_SIZE0603 ,10K,,1%,1/16W,,
23	10K	R90-R93	1/4W	1%	4	SMD Resistor	10K	-	COM_SMD_1PERCENT_1206-SMDRES_1206, 10K,,1%,1/4W,-,-
24	10nF	C2,C27-C29,C55-C57, C70-C72,C116-C118	50V	10%	13	Multilayer Ceramic Chip Capacitors, size 0603	C1608X7R1H103J	TDK Corporation	EM_SMD_CERAMIC_0603-SMD_SIZE0603, 10NF,50V,TDK CORPORATION,C1608X7R1H103J
25	10uF	C12,C37-C39,C64-C66,C77, C78,C80,C96-C100,C103, C107,C108	25V	10%	18	Monolithic Ceramic Capacitor, size 0805	10uF	Murata	EM_SMD_CERAMIC_0805-SMD_SIZE0805, 10UF,25V,-,-
26	10uF	C43-C45,C104-C106,C44A	16V	20%	7	T520 Series Polymer Tantalum Chip capacitor, size 3528	T520B106M016ATE 100	Kemet	EM_SMD_TANTALUM_3528-SMD_SIZE3528_ 21,10UF,16V,KEMET, T520B106M016ATE100
27	10uH	L30-L32,L58-L60	-	30%	6	SMT Power Inductors - Series MSS1038	MSS1038-103NLB	Coilcraft	SMT_INDUCTOR_SMT-SMT_INDUCTORS_MSS 1038,10UH,COILCRAFT,MSS1038-103NLB
28	12.7K	R116	1/8W	1%	1	Thick film chip resistor, size 1206	12.7K	Panasonic	COM_SMD_1PERCENT_1206-SMD_SIZE1206 ,12.7K,,1%,1/8W,,
29	22uF,	C6,C7,C88-C90	100V	20%	5	Aluminium Electrolytic Capacitor	EEVTG2A220UP	Panasonic	EM_ELECTCAP_RADIAL-CAPF_ELEC,22UF, ,100V,PANASONIC,EEVTG2A220UP
30	39uH	L4	-	30%	1	SMT Power Inductors - Series MSS1038	MSS1038-393NLB	Coilcraft	SMT_INDUCTOR_SMT-SMT_INDUCTORS_MSS 1038,39UH,COILCRAFT,MSS1038-393NLB
31	50K	R50,R50A	1/4W	10%	2	3214 5 Turn Trimming Potentiometer	3214J-1-503E	Bourns	SMD_POTS_SMD_POT-SMT_TRIMMER_3214J ,50K,,10%,1/4W,BOURNS,3214J-1-503E
32	62PC8FS	J3	-	-	1	Female DIN Right angle PC Mount, 8 contacts at 270deg	62PC8FS	SwitchCraft	CONN8_62PC8FS_CONN8-62PC8FS
33	75K	R15,R117,R121,R123	1/10W	1%	4	Thick film chip resistor, size 0603	MCR03EZPFX7502	Rohm Semiconductor	COM_SMD_1PERCENT_0603-SMD_SIZE0603 ,75K,,1%,1/10W,,
34	93.1K	R13,R112,R114,R119	1/10W	1%	4	Thick film chip resistor, size 0603	MCR03EZPFX9312	Rohm Semiconductor	COM_SMD_1PERCENT_0603-SMD_SIZE0603 ,93.1K,,1%,1/10W,,
35	120uF,	C8,C30-C34,C36,C58-C63	16V	20%	13	Aluminium Electrolytic Capacitor, Case H70	APXE160ARA121MH 70G	Nippon Chemi-con	EM_ELECTCAP_RADIAL-CAPH70_ELEC, 120UF,16V,NIPPON CHEMI-CON,APXE160ARA121MH70G
36	220uF,	C3,C85-C87	100V	20%	4	Aluminium Electrolytic Capacitor	EEVTG2A221M	Panasonic	EM_ELECTCAP_RADIAL-CAPK16_ELEC, 220UF,,100V,PANASONIC,EEVTG2A221M
37	240 Ohm	R32,R34,R36,R102,R103	1/10W	1%	5	Thick film chip resistor, size 0603	MCR03EZPFX2400	Rohm Semiconductor	COM_SMD_1PERCENT_0603-SMD_SIZE0603 ,240,,1%,1/10W,,
38	330pF	C73,C74	50V	10%	2	Multilayer Ceramic Chip Capacitors, size 0603	C1608X7R1H331K	TDK Corporation	EM_SMD_CERAMIC_0603-SMD_SIZE0603, 330PF,50V,TDK CORPORATION,C1608X7R1H331K
39	390uH	L119	-	10%	1	SMT Power Inductors - Series MSS1038	MSS1038-394KLB	Coilcraft	SMT_INDUCTOR_SMT-SMT_INDUCTORS_MSS 1038,390UH,COILCRAFT, MSS1038-394KLB
40	732 Ohm	R3,R4,R37	1/10W	1%	3	Thick film chip resistor, size 0603	MCR03EZPFX7320	Rohm Semiconductor	COM_SMD_1PERCENT_0603-SMD_SIZE0603 ,732,,1%,1/10W,,

Please be aware that an important notice concerning availability, standard warranty, and use in critical applications of Texas Instruments semiconductor products and disclaimers thereto appears at the first page of this document.

COMPANY PRIVATE
THIS DOCUMENT IS UNCONTROLLED UNLESS IT IS PART OF A DCB/TOC OR IS VIEW ON LINE.

NAME	SIGNATURE	DATE
DRAWN Medical Imaging	Group	30 DEC 10
ENGINEER <ENGINEER>		
APPROVED SC/EM		

NATIONAL SEMICONDUCTOR SDN. BHD. MALACCA ™

Power Module - Board 1

C PART NAME : PM_TX_SDK_V1 A

<CURRENT_DESIGN_SHEETS> REV.

41	806 OHM	R48	1/10W	1%	1	Thick film chip resistor, size 0603	MCR03EZPFX8060	Rohm Semiconductor	COM_SMD_1PERCENT_0603-SMD_SIZE0603 ,806,,1%,1/10W,,
42	5002	NEG5,PN50,POS5, AGND1-AGND10,N60VS,NEG10, NEG5S,NEG60,PN50S,POS10, POS5S,SGND1-SGND10,NEG10S, NEG60S,POS10S,POS2_5, POS3_8,N60VS_1,POS2_5S, POS3_8S,U1_SYNC, U9_SYNC-U1T_SYNC,U13_SYNC, U15_SYNC,U17_SYNC, U19_SYNC,U21_SYNC,U25_SYNC	-	-	48	Miniature Thru Hole Mount Test Points - White Color	5002	Keystone	TESTPOINT_THD_TP-5002
43	1757323	J1,J2	-	-	2	10 PIN MALE 5.08MM CONNECTOR HEADER - RIGHT ANGLE	1757323	PHOENIX CONTACT	CONN10_CONN-HEADER 10
44	B340A-13-F	Z1,Z3,Z5-Z7	-	-	5	3.0Amps Surface Mount Schottky Barrier Rectifier	B340A-13-F	DIODE Incorporated	SCHOTTKY_DIODE_SMA-B340A-13-F
45	B360A-13-F	Z2,Z4	-	-	2	3.0Amps Surface Mount Schottky Barrier Rectifier	B360A-13-F	DIODE Incorporated	SCHOTTKY_DIODE_SMA-B360A-13-F
46	B380-13-F	Z12-Z14	-	-	3	3.0Amps High Voltage Schottky Barrier Rectifier	B380-13-F	DIODE Incorporated	SCHOTTKY_DIODE_SMC-B380-13-F
47	BNX002	M5-M13	-	-	9	Block Type EMIFIL LC Combined Type	BNX002	Murata	LC_EMI_FILTER_BNX00X-BNX002
48	BNX016	M1	-	-	1	Block Type EMIFIL LC Combined Type	BNX016	Murata	LC_EMI_FILTER_BNX01X-BNX016
49	ES02MSABE	SW1	-	-	1	Sealed Tiny Slide Switches (SMT)	ES02MSABE	CK Components	SWITCHES_SPST-ES02MSABE
50	GREEN	CR1,CR2	-	-	2	Surface Mounting Chip LED, size 0603	LNJ626W8CRA	Panasonic	COM_LED_0603-SMD_LED0603,GREEN
51	LM2586-ADJ	U9	-	-	1	LM2586 Simple Switcher 3A Flyback Regulator with Shutdown	LM2586-ADJ	NSC	LM2586_TO263-LM2586-ADJ
52	LM2588-ADJ	U10	-	-	1	LM2588 Simple Switcher 5A Flyback Regulator with Shutdown	LM2588-ADJ	NSC	LM2588_TO263-LM2588-ADJ
53	LM2941	U14,U24	-	-	2	LM2941/LM2941C 1A Low Dropout Adjustable Regulator	LM2941	NSC	LM2941_TO263-LM2941
54	LM2991	U12,U16,U23	-	-	3	LM2991 Negative Low Dropout Adjustable Regulator	LM2991	NSC	LM2991_TO263-LM2991
55	LM3881	U4	-	-	1	Power Sequencer	LM3881	NSC	LM3881_MSOP8-LM3881
56	LM5574	U25	-	-	1	SIMPLE SWITCHER 75V, 0.5A Step-Down Switching Regulator	LM5574	NSC	LM5574_TSSOP16-LM5574
57	LM22670-ADJ	U11,U13,U15,U17,U19,U21	-	-	6	3A Simple Switcher	LM22670-ADJ	NSC	LM22670_TO263-LM22670-ADJ
58	LM22671-ADJ	U1	-	-	1	500mA Simple Switcher, Step-Down Voltage Regulator with Features	LM22671-ADJ	NSC	LM22671_PSOP8-LM22670-ADJ
59	LMV321	U3,U6,U7	-	-	3	General Purpose, Low Voltage, Rail-to-Rail Output Operational Amplifiers	LMV321	NSC	LMV321_SOT23-LMV321
60	LMV762	U5,U8	-	-	2	LMV761/LMV762 Low Voltage, Precision Comparator with Push-Pull Output	MSOP8	NSC	LMV762_MSOP8-LMV762
61	LP3878-ADJ	U18,U20,U22	-	-	3	Micropower 800mA Low Noise "Ceramic Stable" Adjustable Voltage Regulator for 1V to 5V Applications	LP3878-ADJ	NSC	LP3878-ADJ_PSOP8-LP3878-ADJ
62	MMSZ5233BS	Z17	-	-	1	Surface Mount Zener Diode	MMSZ5233BS	DIODE Inc.	ZENER_DIODE_SMD-DIODE_SOD323, MMSZ5233BS,MMSZ5233BS
63	MURS120-13	D1,D2	-	-	2	1.0Amp Surface Mount Super-Fast Rectifier	MURS120-13	DIODE Incorporated	DIODE_SMB-MURS120-13
64	NFE61PT472C1H9	M2-M4	-	-	3	EMIFIL (LC Combined) Feed Through Type	NFE61PT472C1H9	Murata	LC_EMI_FILTER_NFE61P-NFE61PT472C1H 9
65	OPEN	C40-C42,C67-C69	25V	10%	6	Monolithic Ceramic Capacitor, size 0805	OPEN	-	EM_SMD_CERAMIC_0805-SMD_SIZE0805, OPEN,25V,-,-
66	OPEN	C111,C77A,C78A,C80A	-	-	4	Ceramic Chip Capacitor, size 0603	OPEN	-	EM_SMD_CERAMIC_0603-SMD_SIZE0603, OPEN,-,-,OPEN
67	OPEN	C89A,C90A	100V	20%	2	Aluminium Electrolytic Capacitor	EEVTG2A221M	Panasonic	EM_ELECTCAP_RADIAL-CAPK16_ELEC, OPEN,100V,PANASONIC,EEVTGZA221M
68	OPEN	R17,R26-R28,R39,R43,R47, R78,R79,R82,R83,R110,R122	1/16W	1%	13	Thick film chip resistor, size 0603	OPEN	Panasonic	COM_SMD_1PERCENT_0603-SMD_SIZE0603 ,OPEN,,1%,1/16W,,
69	OPEN	R62	3W	1%	1	High Power Current Sense Chip Resistor, size 2512	OPEN	-	COM_SMD_1PERCENT_SMD-SMD_CRA2512, OPEN,,1%,3W,-,OPEN
70	S100CT-ND	Z18	-	-	1	Schottky Rectifiers	S100CT-ND	Fairchild Semiconductor	SCHOTTKY_DIODE_SMA-S100CT-ND
71	SMBJP6KE22A	Z8,Z9	-	-	2	Zener Diode (Transient Voltage Suppressor)	SMBJP6KE22A	Micro Commercial Components	ZENER_DIODE_DO214AA-SMB_DO214AA, SMBJP6KE22A,SMBJP6KE22A
72	TRANSFORMER_STD	T1,T2	-	-	2	Custom made 10 pins transformer	TRANSFORMER_STD	-	XFORMER_STD_STD10-TRANSFORMER_STD
73	ZVP3310F	U26	-	-	1	P-Channel 100V Enhancement Mode Vertical DMOST FET	ZVP3310F	DIODE Inc	EM_PMOSFET_SOT23-3-SOT_23_132, ZVP3310F
TOTAL					391				

NOTES:(MODIFICATION FOR BOARD DATED 22-NOV-2010)
1. DO NOT STUFF R50, T1 & U9.
2. SWAP DRAIN AND SOURCE CONNECTION FOR U26.
3. ADDED RESISTOR R116.
4. MODIFY CASE SIZE FOR CAPACITOR C115 FROM 0603 TO 0805.
5. ADDED CAPACITOR C115A & C119.
6. MODIFY CASE SIZE FOR RESISTOR R90-R97 FROM 0603 TO 1206.

TRANSFORMER INFORMATION FOR T2:
1. T2 PIN 1,2 USE 0.812MM WIRE (AWG20), 9 TURNS.
2. T7 PIN 6,7 AND 9,10, USE 0.57MM (AWG23), 28 TURNS EACH.
3. ADJUST FERRITE E CORE AIR GAP TO ACHIEVE APPROX 45UH INDUCTANCE AT PIN 1,2.

Please be aware that an important notice concerning availability, standard warranty, and use in critical applications of Texas Instruments semiconductor products and disclaimers thereto appears at the first page of this document.

COMPANY PRIVATE
THIS DOCUMENT IS UNCONTROLLED UNLESS IT IS PART OF A DCB/TOC OR IS VIEW ON LINE.

NAME	SIGNATURE	DATE
DRAWN Medical Imaging	Group	30 DEC 10
ENGINEER <ENGINEER>		
APPROVED SC/EM		

NATIONAL SEMICONDUCTOR SDN. BHD. MALACCA ™

Power Module - Board 1

C | PART NAME : PM_TX_SDK_V1 | A

<CURRENT_DESIGN_SHEETS> REV.