SAR - Amplifier Design

TI Precision Labs – SAR

by Tim Green, Art Kay, Luis Chioye, Dale Li

Art Kay, MGTS Bio:

Applications Engineering Manager, SAR Ref Mux

- **Career**
  - Formally Op Amp's Apps Manager
  - Developed Op Amp Precision Labs
  - Published a book on Amplifier Noise & Pocket Reference
  - Formally at Burr-Brown Corp., and Northrop Grumman Corp
  - M.S.E.E. Georgia Institute of Technology
- **Expertise**
  - Focus on low noise, precision signal chain design
  - Sensor signal conditioning

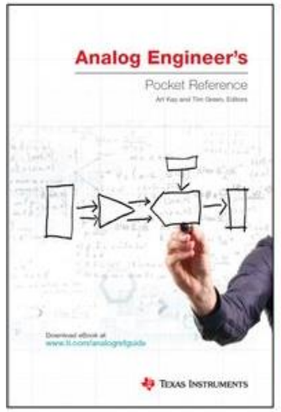

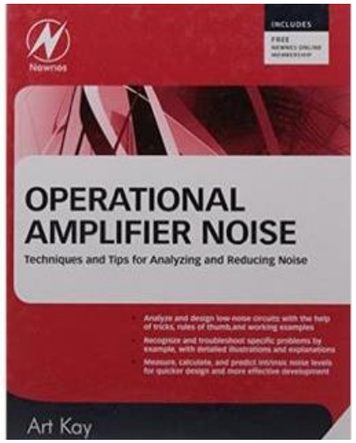

Tim Green, MGTS Bio:

Applications Engineering Manager, Precision Op Amp

- **Career**
  - 32 years of Analog and Mixed Signal Experience
  - 16 years in Board/System Level Design:
    - Brushless Motor Control, Jet Engine Control, Missile Systems, Data Acquisition Systems, CCD Cameras
  - 16 years in Analog/Mixed Signal Semiconductor:
    - Power Op Amps, Instrumentation Amplifiers, 4-20mA, Difference Amplifiers, Small Signal Op Amps, Programmable Gain Amplifiers
  - B.S.E.E., University of Arizona 1981
- **Expertise**
  - Op Amp Stability
  - SPICE Op Amp Macro-modeling
  - Publishing definition-by-example articles on op amp stability
  - Troubleshooting complex board/system level problems

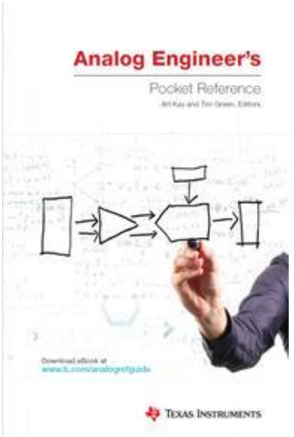

Agenda

1. **ADC Input types**
   a) **Single ended, pseudo-differential, fully-differential, and true-differential**
   b) **Switched capacitor vs. buffered**
2. **Linear operation of amplifier and ADC**
   a) Rail-to-Rail amplifiers and crossover distortion
   b) Inverting configuration
3. **Common Front Ends**
   a) Instrumentation amplifier: Selecting gain and common mode range
   b) Fully Differential Amplifiers: Single Ended to Differential
4. **Error Sources:**
   a) Statistics: Worst Case vs. Typical
   b) Offset and Gain Error
   c) Calibration
   d) Drift and Non-linearity
   e) Noise
5. **AC Specifications and the FFT**
6. **Aliasing**

Single Ended

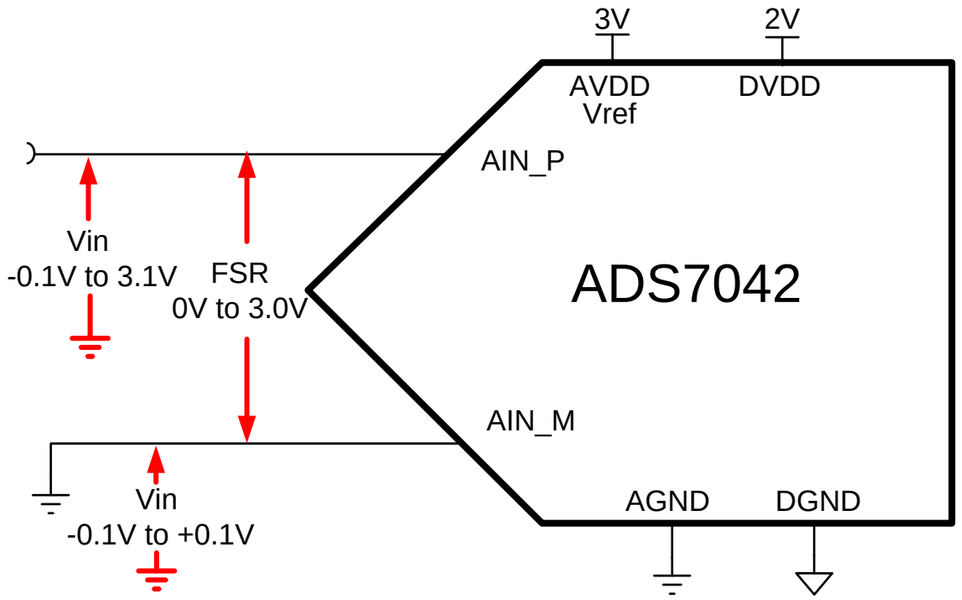

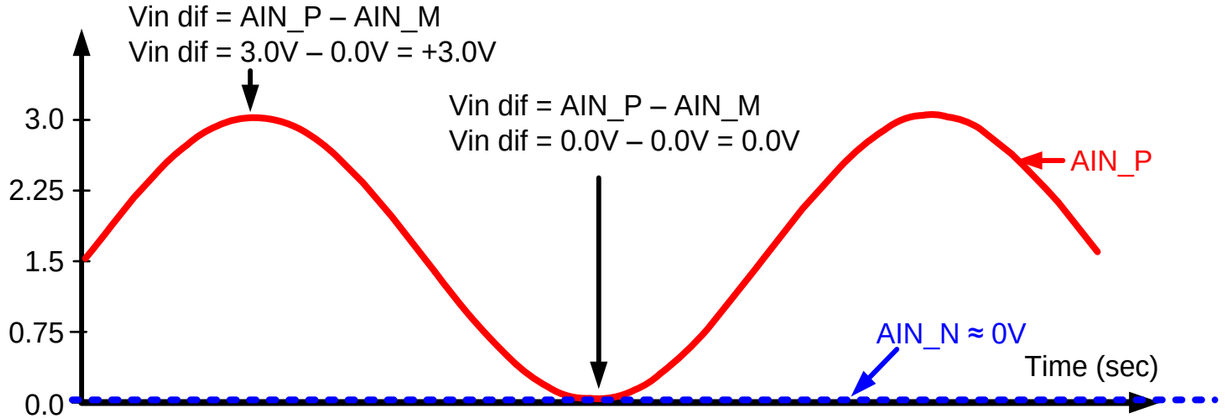

Pseudo-differential

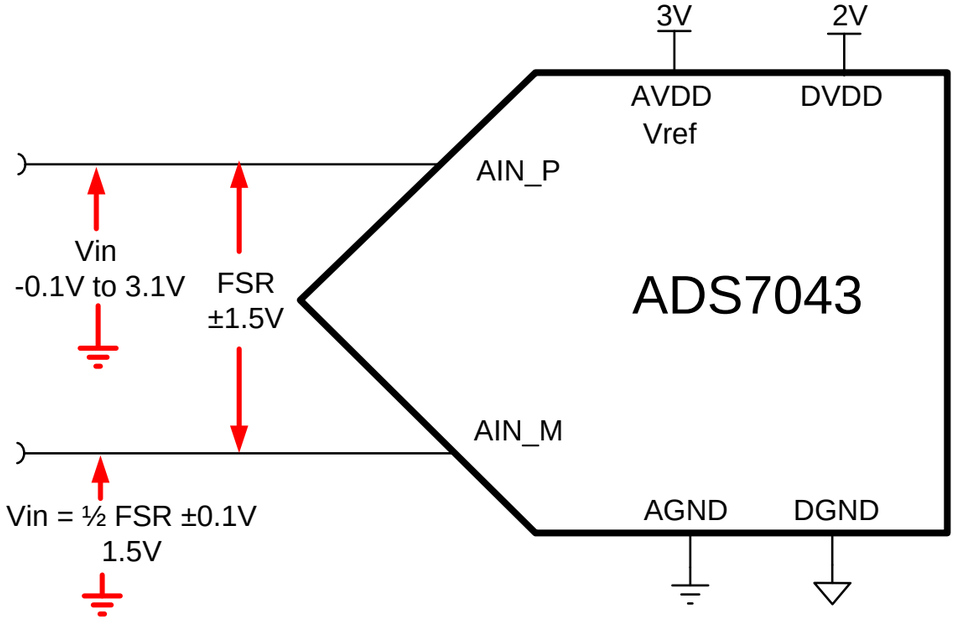

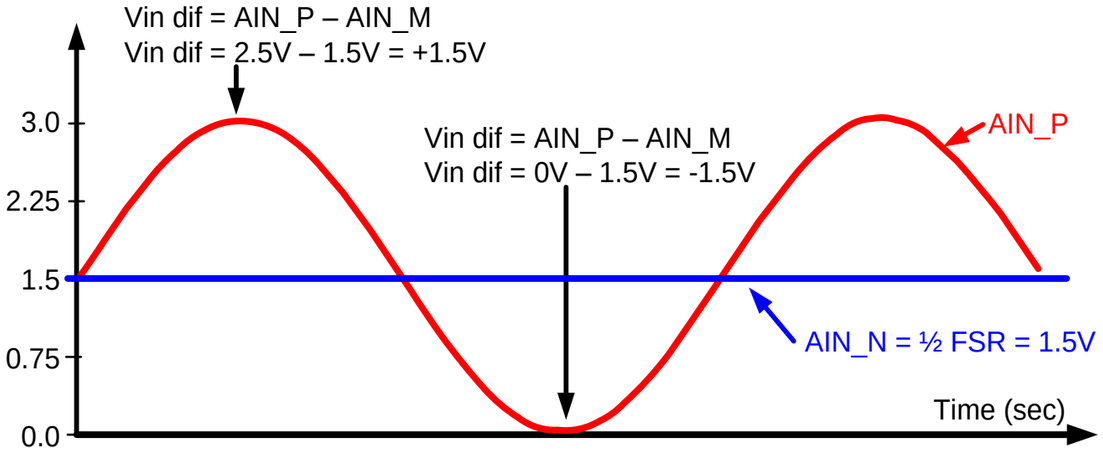

ADC Input Swing and Common Mode

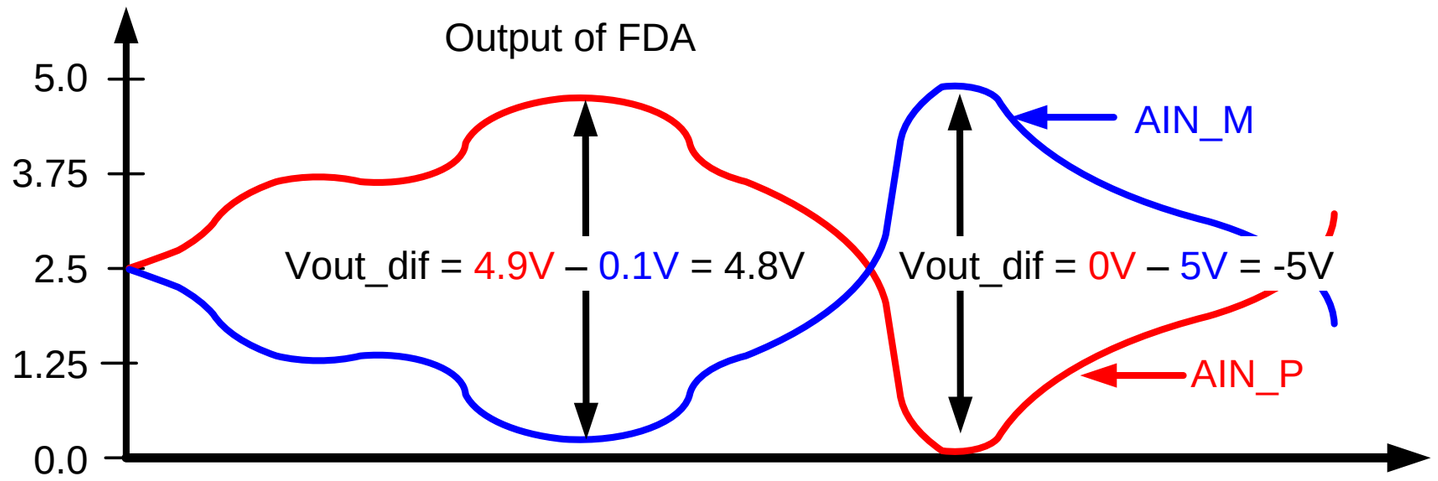

$$V_{dif} = AIN_P - AIN_M$$

- Differential of ±5V (10Vpp)
- Single ended equivalent 0V to 5V (5Vpp)
- Double the range of single ended
- Negative differential output can occur when absolute output voltage of each output is positive (unipolar single supply)

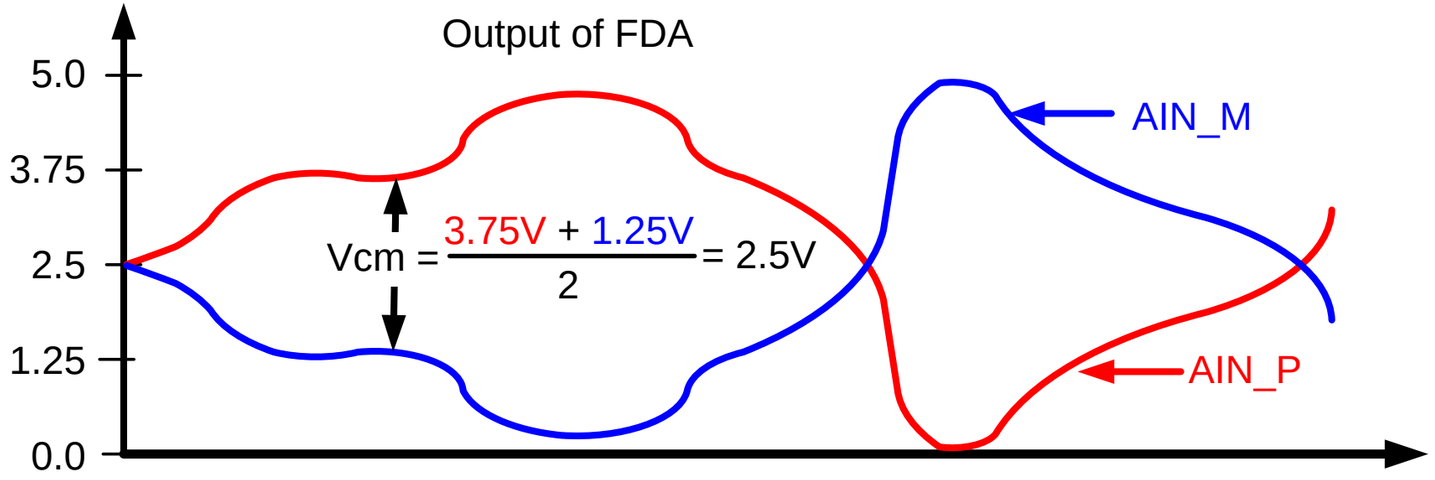

$$Vcm = \frac{AIN_P + AIN_M}{2}$$

- In this example common mode is always 2.5V

Fully Differential Input

PARAMETER 9110		MIN	TYP	MAX	UNIT
ANALOG INPUT					
Full-scale input voltage span		-Vref		Vref	
Absolute Input voltage range	AINP to GND	-0.1		Vref+0.1	V
	AINM to GND	-0.1		+0.1	
Common-mode voltage range (AIN_P + AIN_N)/2		**(Vref/2)-0.1**	**Vref/2**	**(Vref/2)+0.1**	

Vcm must be constant at Vref/2

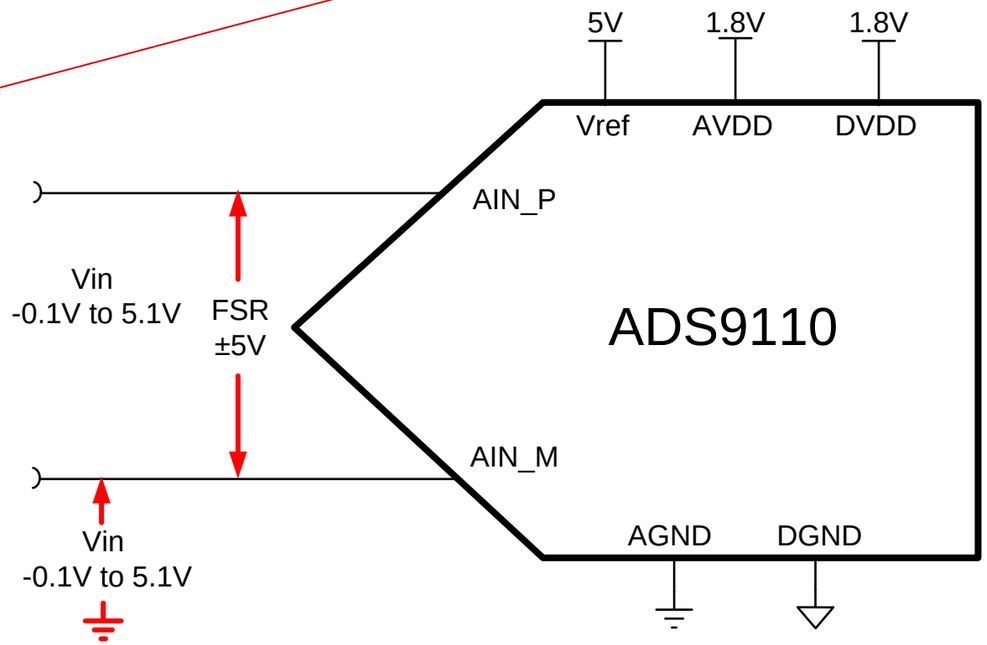

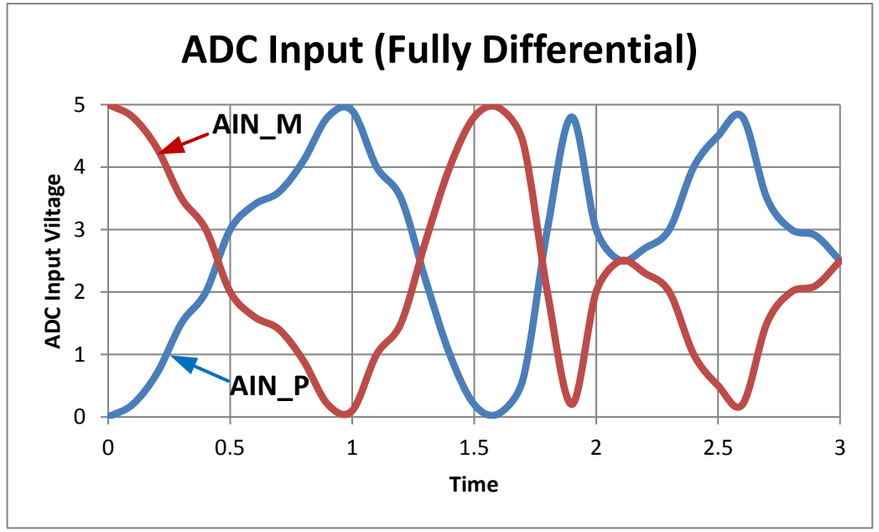

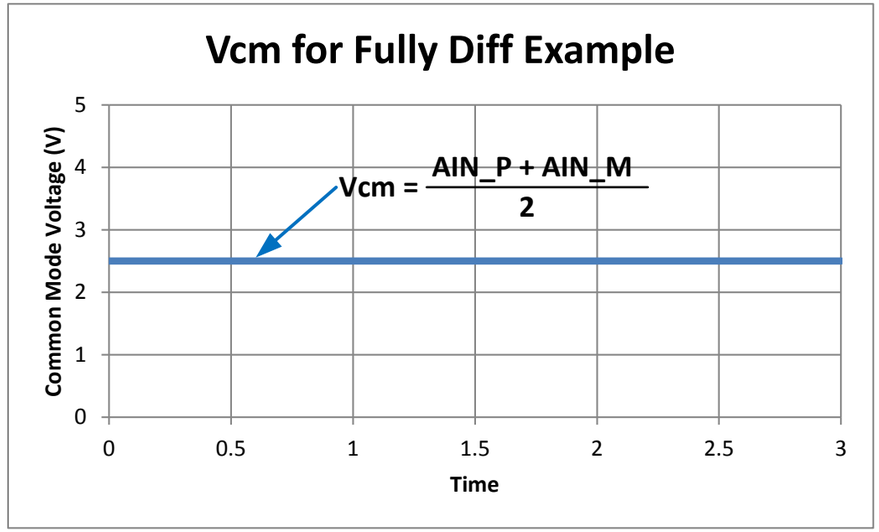

True Differential Input

PARAMETER ADS8881		MIN	TYP	MAX	UNIT
ANALOG INPUT					
Full-scale input voltage span		-Vref		Vref	
Absolute Input voltage range	AINP to GND	-0.1		Vref+0.1	V
	AINM to GND	-0.1		+0.1	
Common-mode voltage range (AIN_P + AIN_N)/2		**0.0**	**Vref/2**	**Vref**	

Vcm has a wide voltage range.

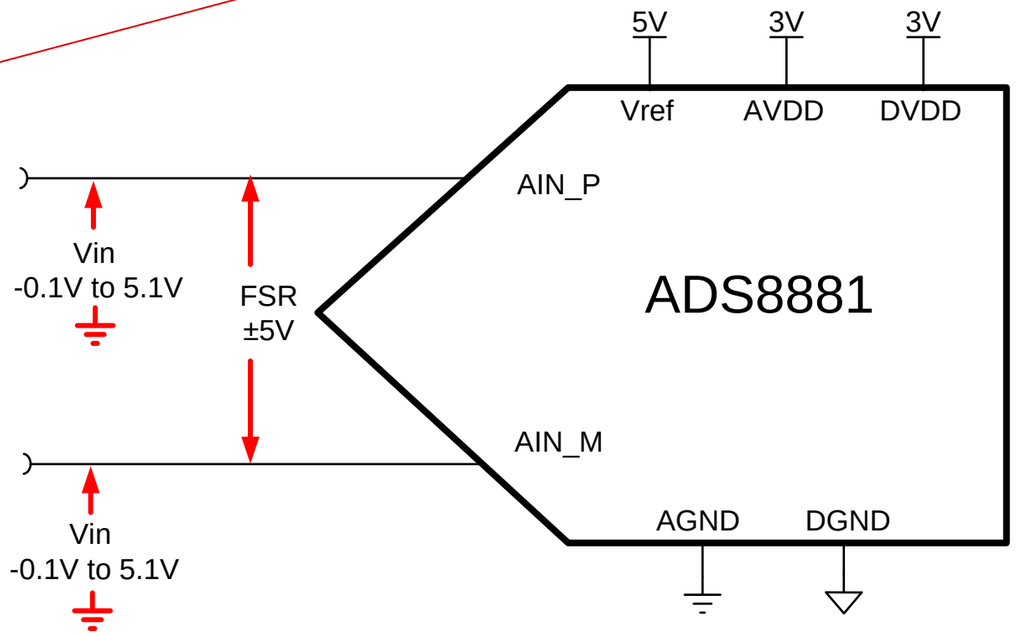

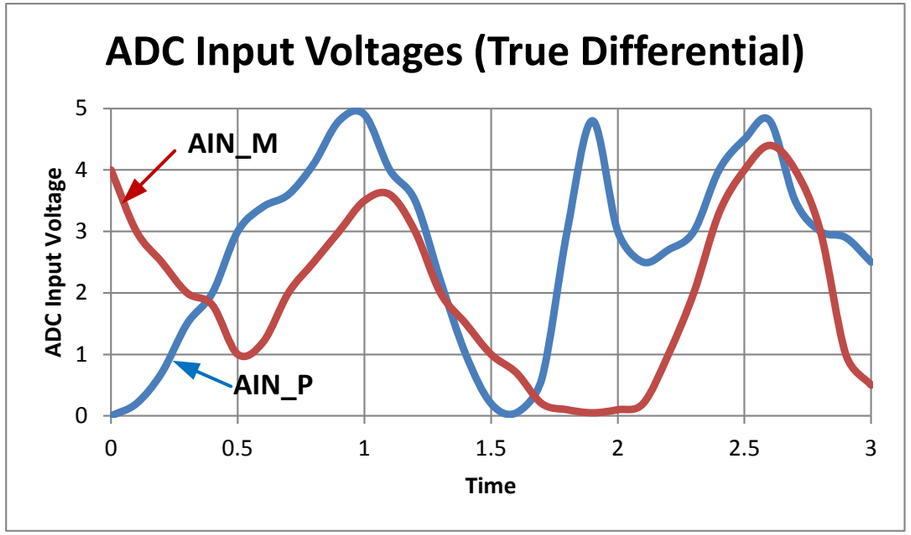

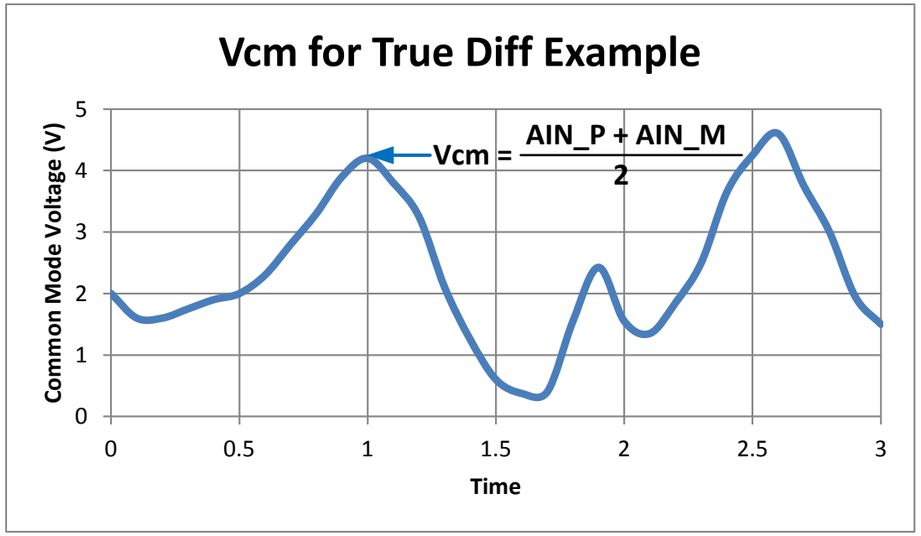

Summary *Examples* of ADC input types

Input Type	Vref	Ain_P	Ain_M	Vcm	FSR	Example 16 Bit Output
Single Ended	5V	0V to 5V	GND (+/- 100mV)	n/a	0V to 5V	0000 = 0V FFFF = FSR = 5V
Pseudo Differential	5V	0V to 5V	Set ½ * Range (2.5V)	n/a	-2.5V to +2.5V	8000 = -2.5V 7FFF = +2.5V
Fully Differential	5V	0V to 5V	0V to 5V	Set ½ * Range (2.5V)	-5V to +5V	8000 = -5V 7FFF = +5V
True Differential	5V	0V to 5V	0V to 5V	Can vary from –FS to +FS	-5V to +5V	8000 = -5V 7FFF = +5V

Input Impedance: Resistive vs. Switched Capacitor

Switched Capacitor Input

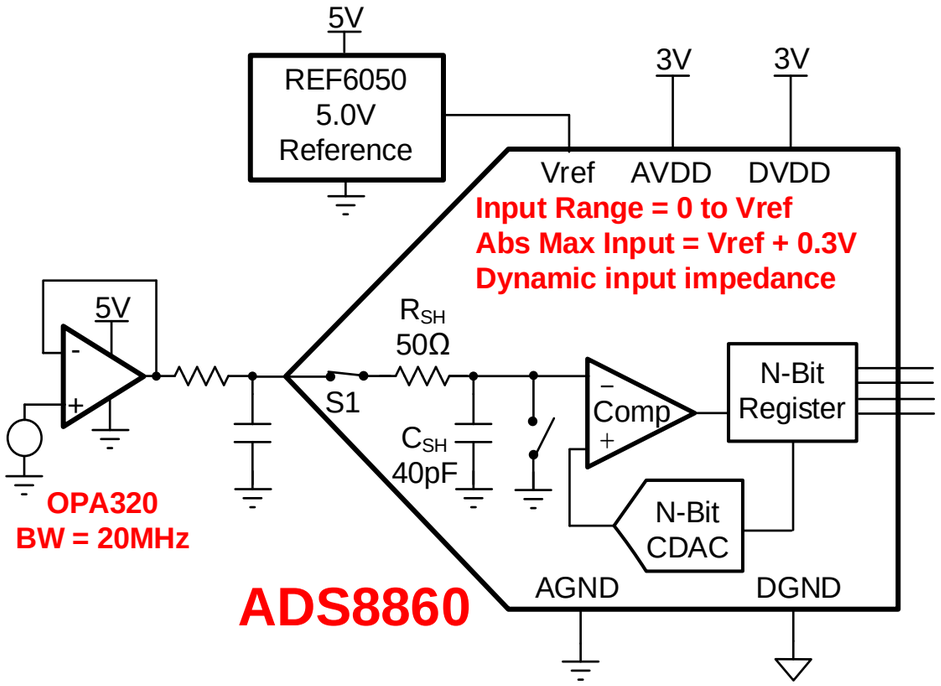

- Wide bandwidth external amp required
- Dynamic input impedance
- Input voltage range set by reference

Resistive, High Voltage, PGA input

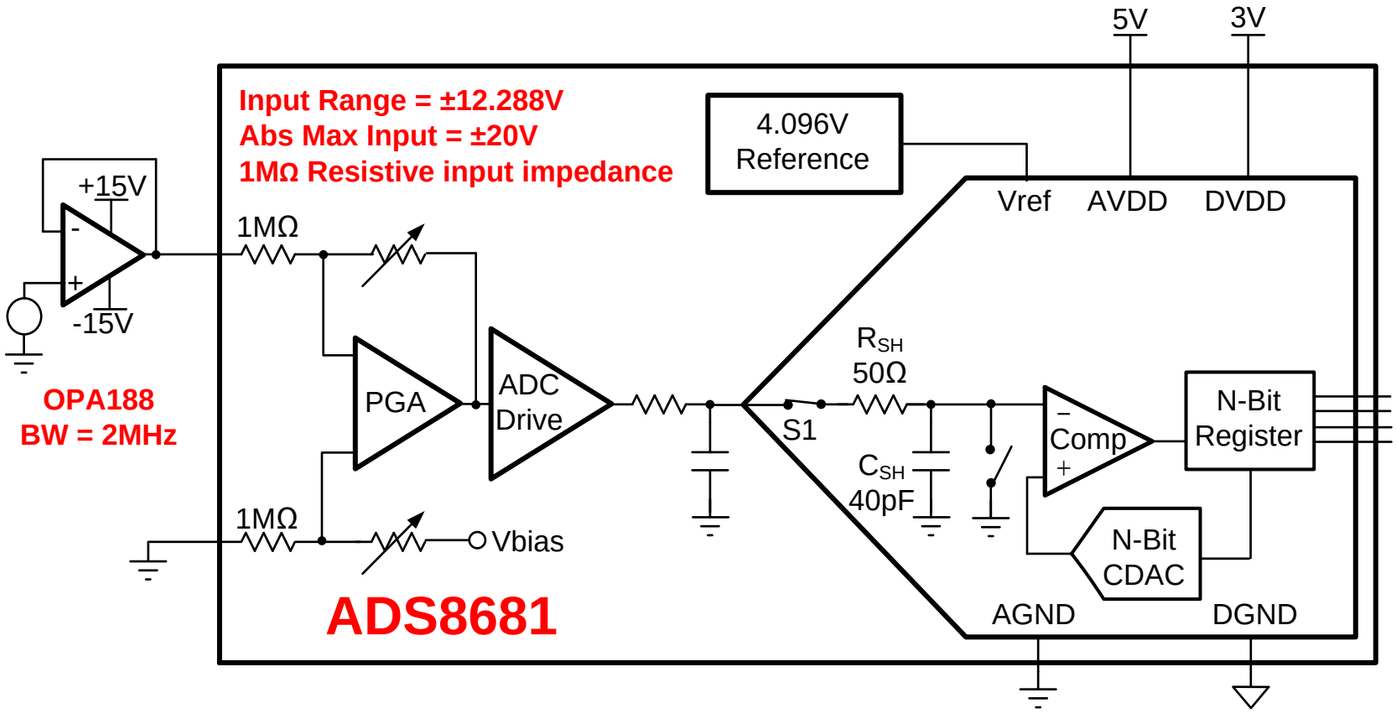

- External amplifier bandwidth not critical
- Internal PGA, ADC driver, and reference
- High voltage input (±12.288V) with 3V & 5V supplies

Agenda

1. **ADC Input types**
   a) Single ended, pseudo-differential, fully-differential, and true-differential
   b) Switched capacitor vs. buffered
2. **Linear operation of amplifier and ADC**
   a) **Rail-to-Rail amplifiers and crossover distortion**
   b) **Inverting configuration**
3. **Common Front Ends**
   a) Instrumentation amplifier: Selecting gain and common mode range
   b) Fully Differential Amplifiers: Single Ended to Differential
4. **Error Sources:**
   a) Statistics: Worst Case vs. Typical
   b) Offset and Gain Error
   c) Calibration
   d) Drift and Non-linearity
   e) Noise
5. **AC Specifications and the FFT**
6. **Aliasing**

Single Ended Input: ADC Input Range Considerations

PARAMETER ADS7042		TEST CONDITION	MIN	TYP	MAX	UNIT
ANALOG INPUT						
Full-scale input voltage span			**0**		**AVDD**	
Absolute Input voltage range	AINP to GND		0		AVDD+0.1	V
	AINM to GND		-0.1		+0.1	

Absolute Maximum Ratings

ADS7042	MIN	MAX	UNIT
AVDD to GND	-0.3	3.9	V
DVDD to GND	-0.3	3.9	V
AINP to GND	**-0.3**	**AVDD + 0.3**	V
AINN to GND	-0.3	+0.3	V

AVDD+0.3 = 3.3V + 0.3V = 3.6V

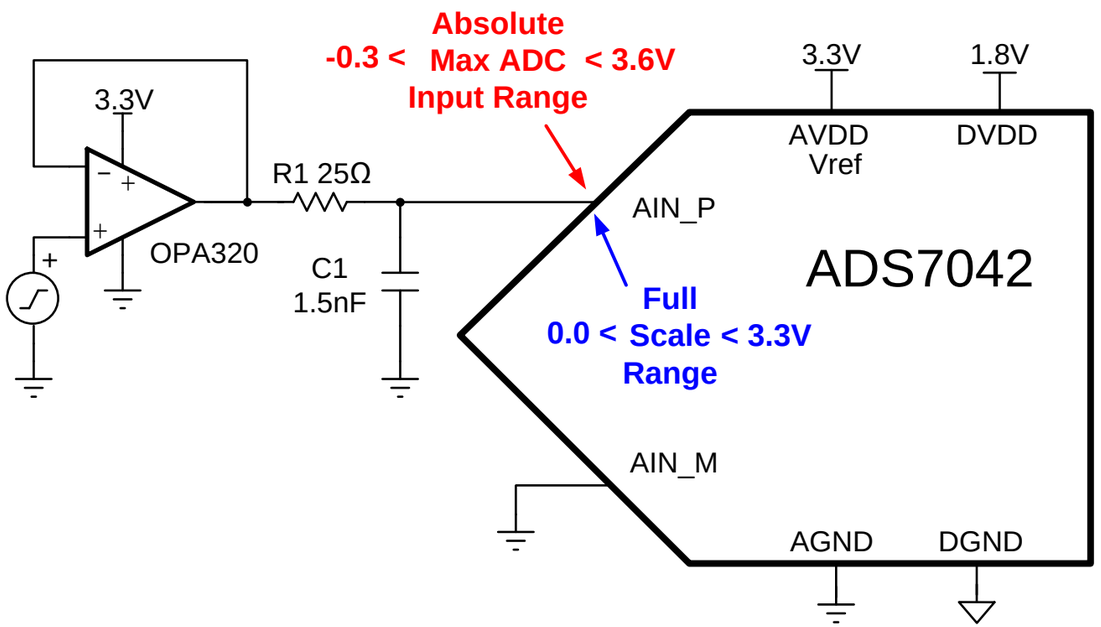

Single Ended Input: OPA320 Linear Range

PARAMETER OPA320		TEST CONDITION	MIN	TYP	MAX	UNIT
INPUT VOLTAGE						
Common-mode voltage range	V_{cm}		**(V-) - 0.1**		**(V+)+0.1**	V
OUTPUT						
Voltage swing from both rails	V_O	RL = 10kΩ		10	**20**	mV
		RL = 2kΩ		25	35	
OPEN-LOOP GAIN						
Open-loop gain	A_{OL}	**0.1 < Vo < (V+)-0.1V, R_L = 10kΩ**	114	132		dB
		0.2 < Vo < (V+)-0.2V, R_L = 2kΩ	108	123		

Amplifier input range	$-0.1V < V_{cm} < 3.4V$
Amplifier output range	$0.02 < V_O < 3.28V$
Amplifier Linear Range	$0.1 < V_O < 3.2V$
Worst Case Range	**$0.1 < V_O < 3.2V$**

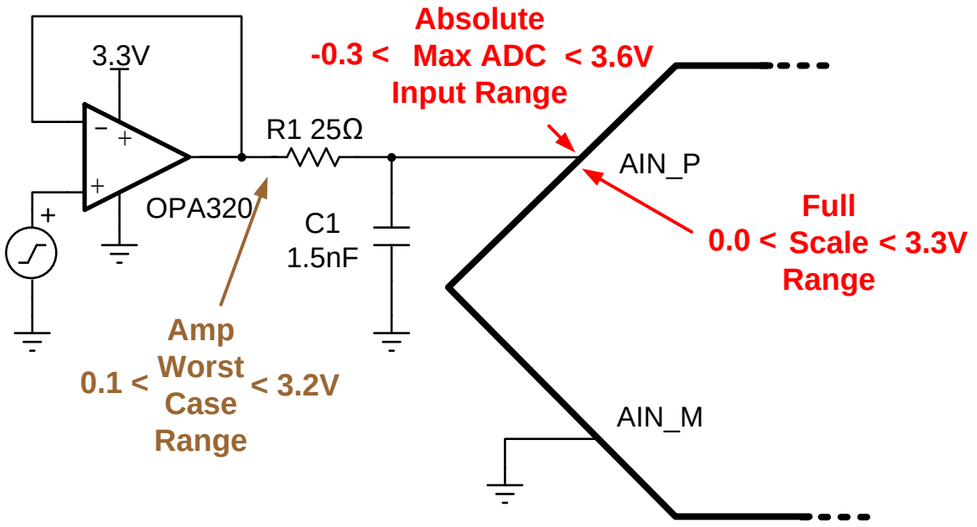

Single Ended Input: Extending the Op Amp Range

Low Noise Negative Bias Generator

- Regulated Output Voltage −0.232 V
- Output Voltage Tolerance 5%
- Output Voltage Ripple 4 mV_{PP}
- Maximum Output Current 26 mA

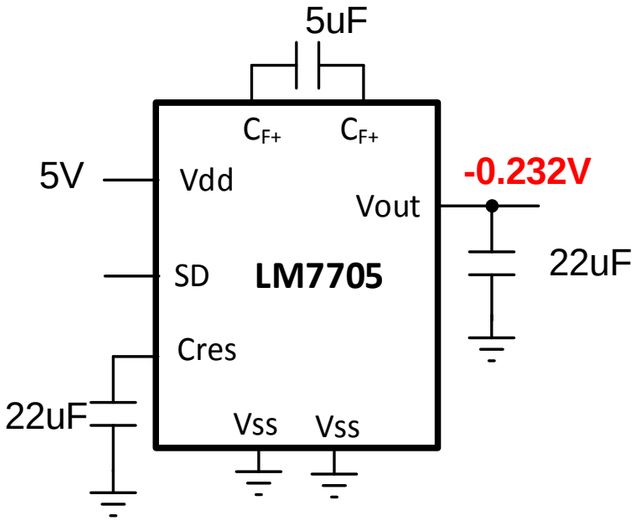

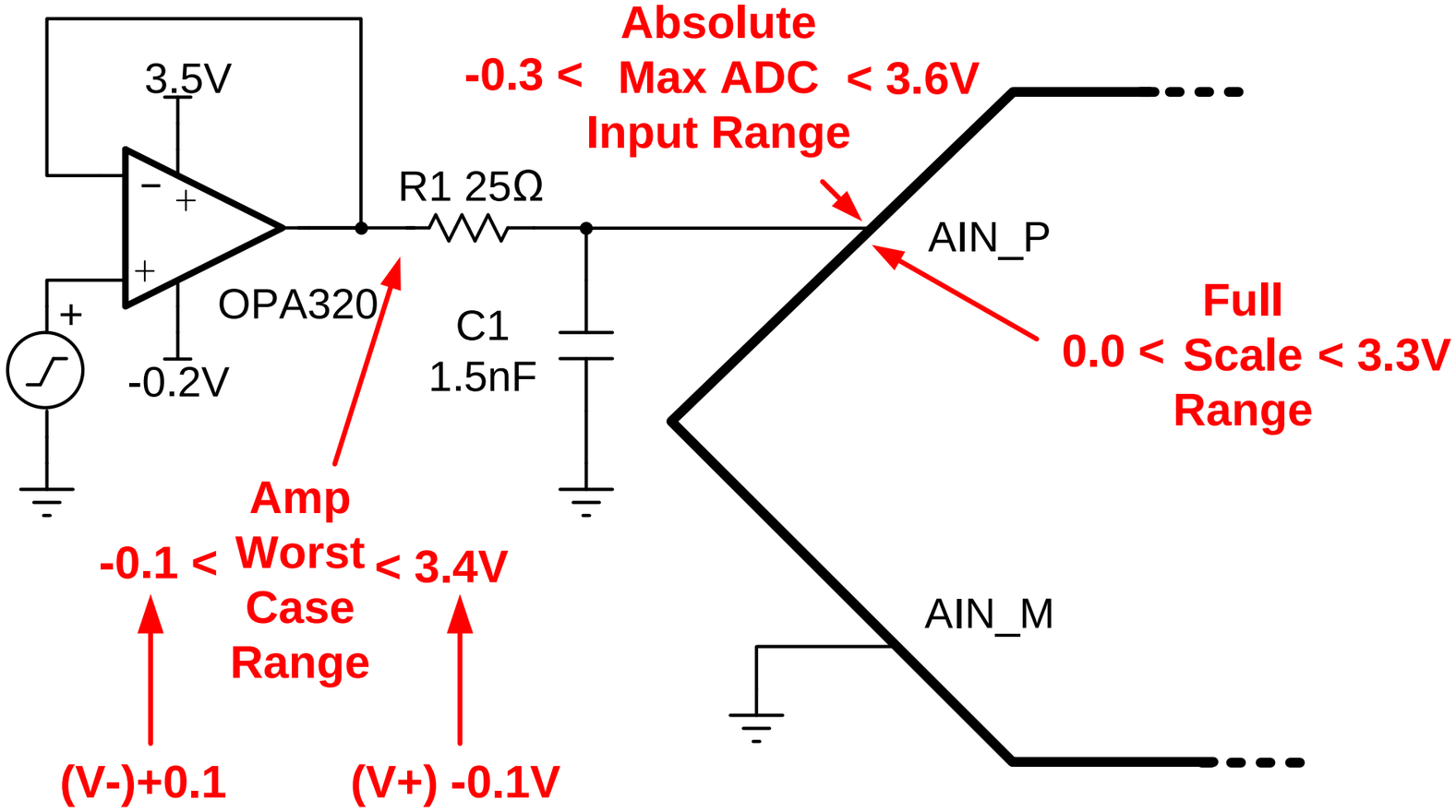

Single Ended Input: OPA625

PARAMETER OPA320		TEST CONDITION	MIN	TYP	MAX	UNIT
INPUT VOLTAGE						
Common-mode voltage range	V_{cm}		(V-)		(V+) - 1.15	V
OUTPUT						
Voltage swing from both rails	V_O	RL = 10kΩ		20	**35**	mV
		RL = 600Ω		60	80	
OPEN-LOOP GAIN						
Open-loop gain	A_{OL}	**0.15 < Vo < (V+) - 0.15V, R_L = 10kΩ**	110	132		dB
		0.2 < Vo < (V+) - 0.2V, R_L = 600Ω	106	128		

Amplifier input range	$0.0V < V_{cm} < 2.15V$
Amplifier output range	$0.035 < V_O < 3.265V$
Amplifier Linear Range	$0.15 < V_O < 3.15V$
Worst Case Range	$0.15 < V_O < 2.15V$

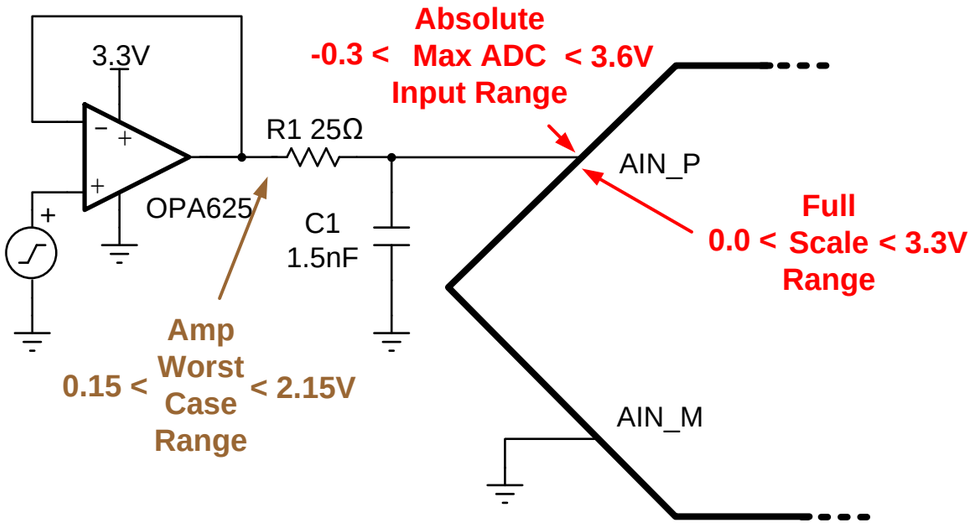

Inverting amplifier: Eliminate Common mode issue

PARAMETER OPA625		TEST CONDITION	MIN	TYP	MAX	UNIT
INPUT VOLTAGE						
Common-mode voltage range	V_{cm}		(V-)		(V+) - 1.15	V
OUTPUT						
Voltage swing from both rails	V_O	RL = 10kΩ		20	**35**	mV
		RL = 600Ω		60	80	
OPEN-LOOP GAIN						
Open-loop gain	A_{OL}	0.15 < Vo < (V+) - 0.15V, R_L = 10kΩ	110	132		dB
		0.2 < Vo < (V+) - 0.2V, R_L = 600Ω	106	128		

Amplifier input range	No Vcm limit
Amplifier output range	$0.035 < V_O < 3.265V$
Amplifier Linear Range	$0.15 < V_O < 3.15V$
Worst Case Range	**$0.15 < V_O < 3.15V$**

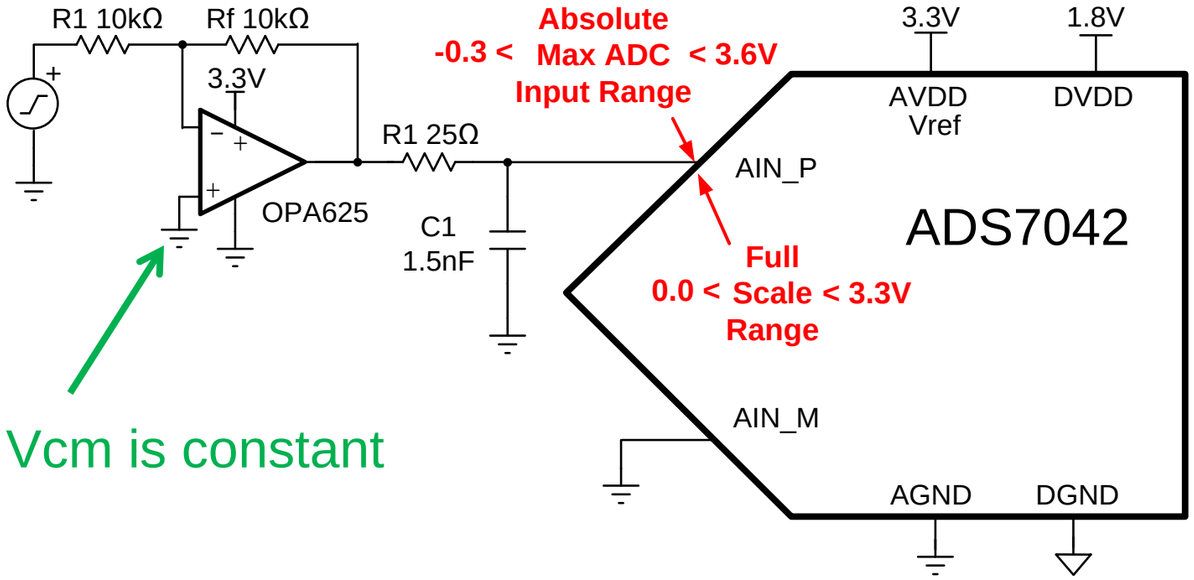

Input Crossover Distortion in Rail-to-Rail Inputs

PARAMETER OPA316		TEST CONDITIONS	MIN	TYP	MAX	UNIT
INPUT VOLTAGE RANGE						
V_{CM}	Common mode voltage range	TA = -40C to 85C	-0.2		(V+)+0.1	V
CMRR	Common mode Rejection	Vs = 5V, -0.1V<Vcm< 3.6V	76	90		dB
		Vs = 5V, -0.1V<Vcm<5.2V	65	80		dB

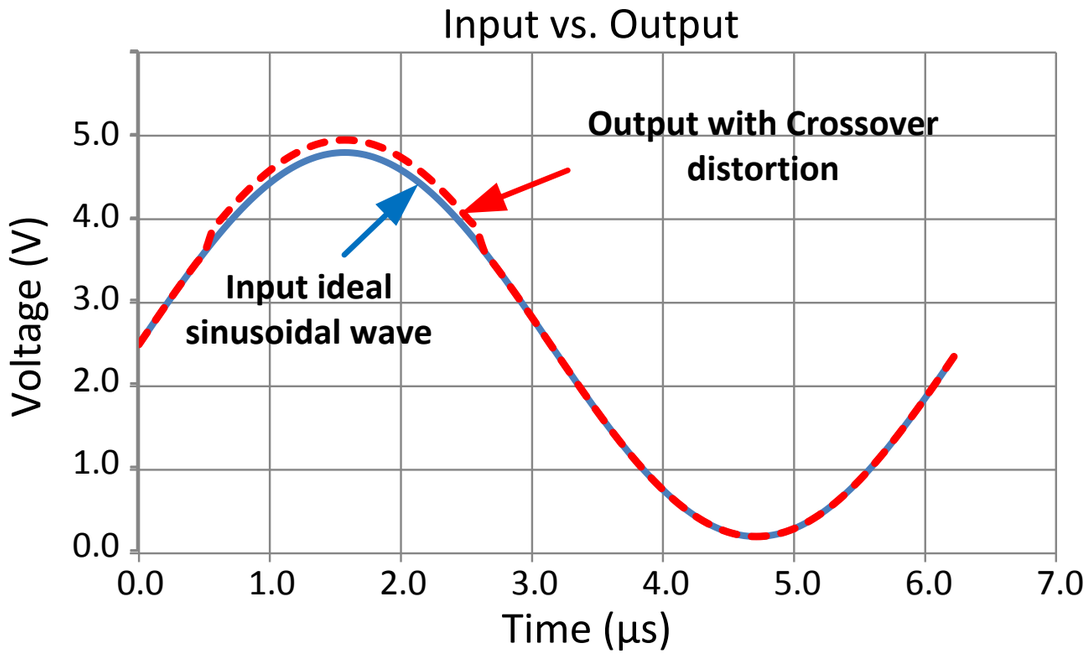

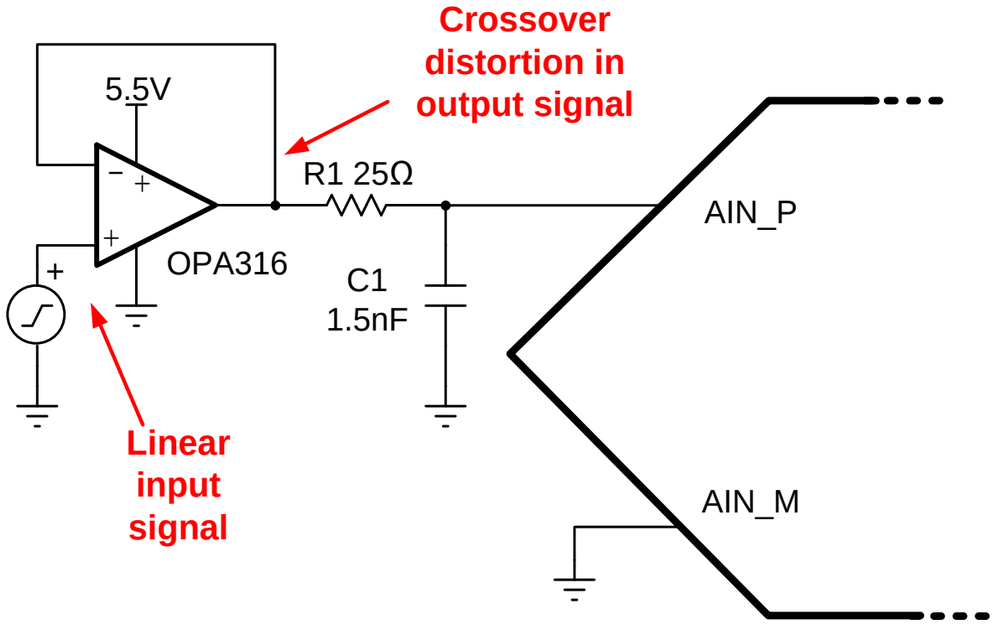

Input Cross-Over distortion vs Zero Cross-Over

PARAMETER: OPA350 – Has Crossover		MIN	TYP	MAX	UNIT
INPUT VOLTAGE RANGE					
V_{CM}	Common mode voltage range	(V-)-0.1		(V+)+0.1	V
CMRR	Common mode Rejection -0.1V<Vcm<5.6V	74	90		dB

PARAMETER: OPA320 – Zero Cross-Over		MIN	TYP	MAX	UNIT
INPUT VOLTAGE RANGE					
V_{CM}	Common mode voltage range	(V-)-0.1		(V+)+0.1	V
CMRR	Common mode Rejection -0.1V<Vcm<5.6V	100	114		dB

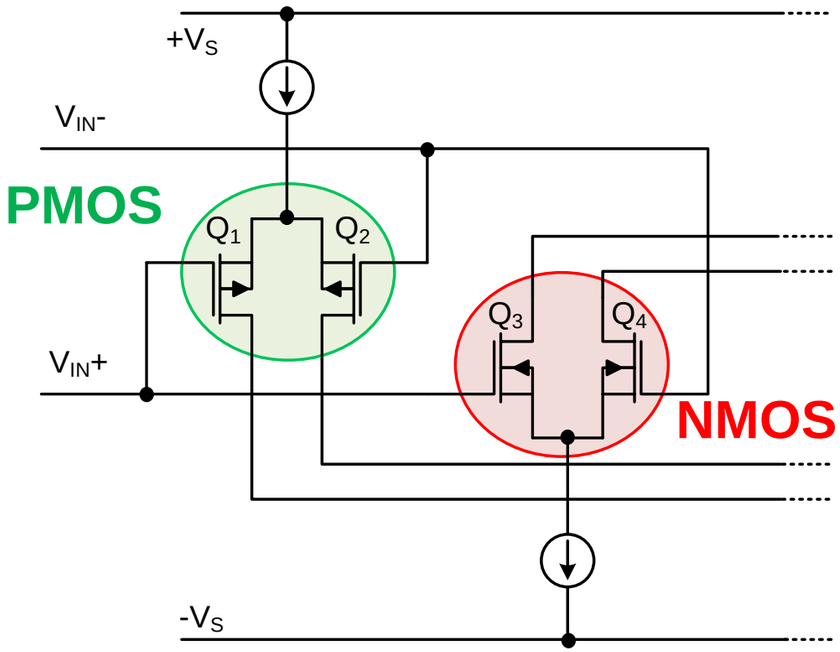

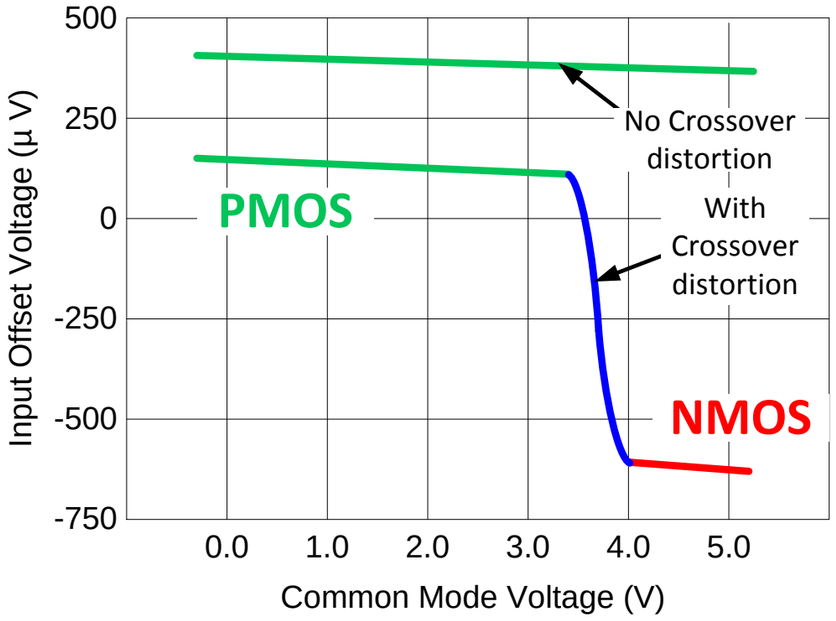

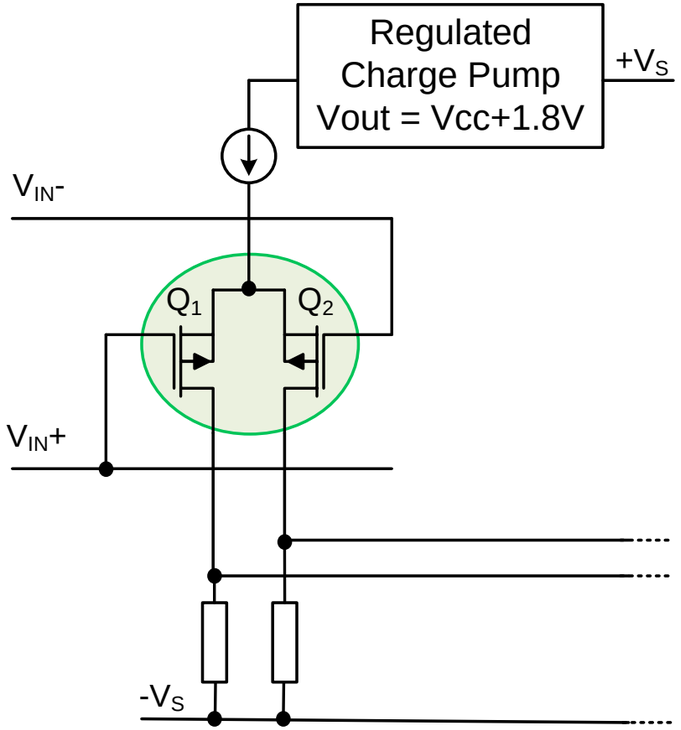

Optimize bypass for internal charge pump op amps

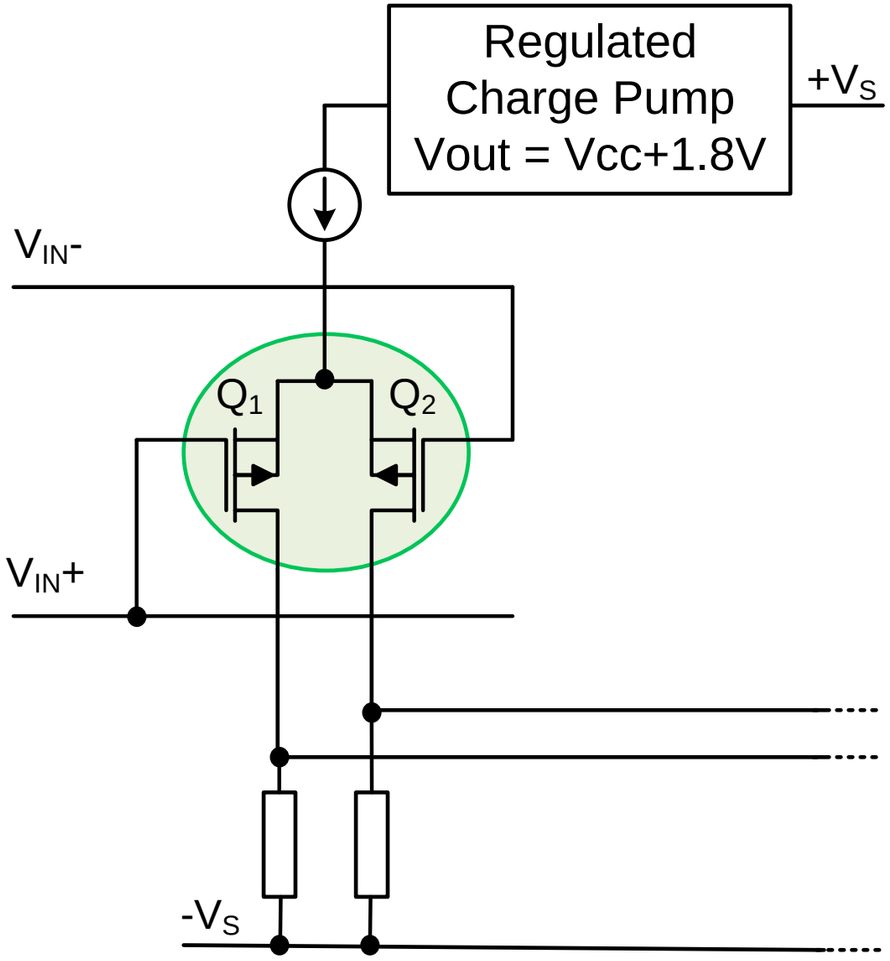

Short direct connections from supply to decoupling

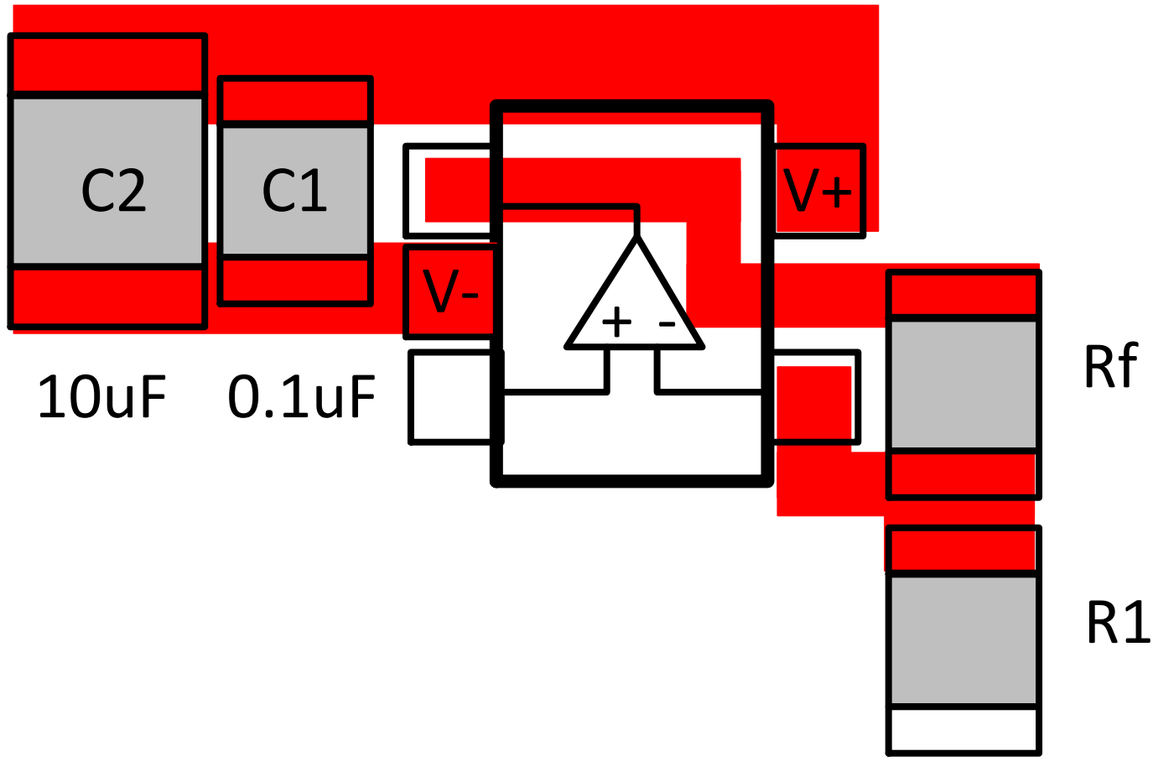

THD vs. Crossover Distortion

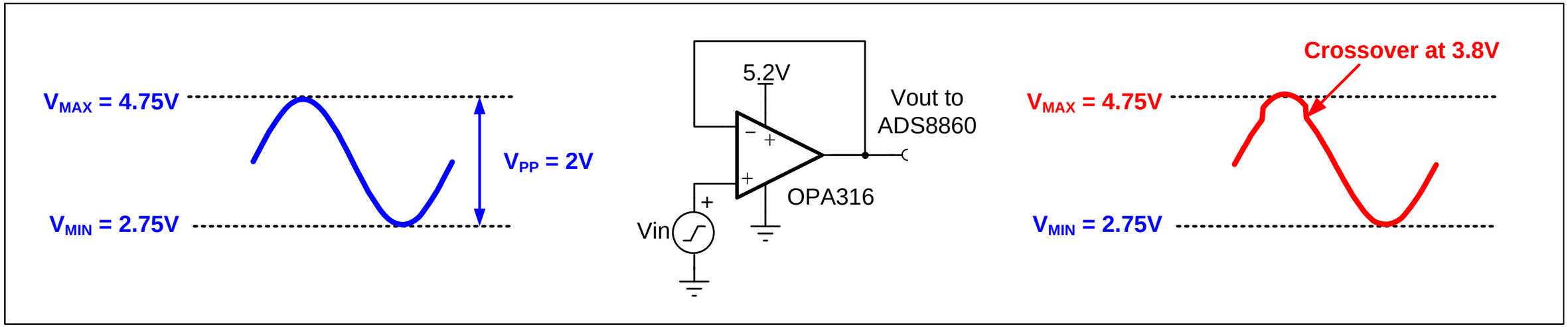

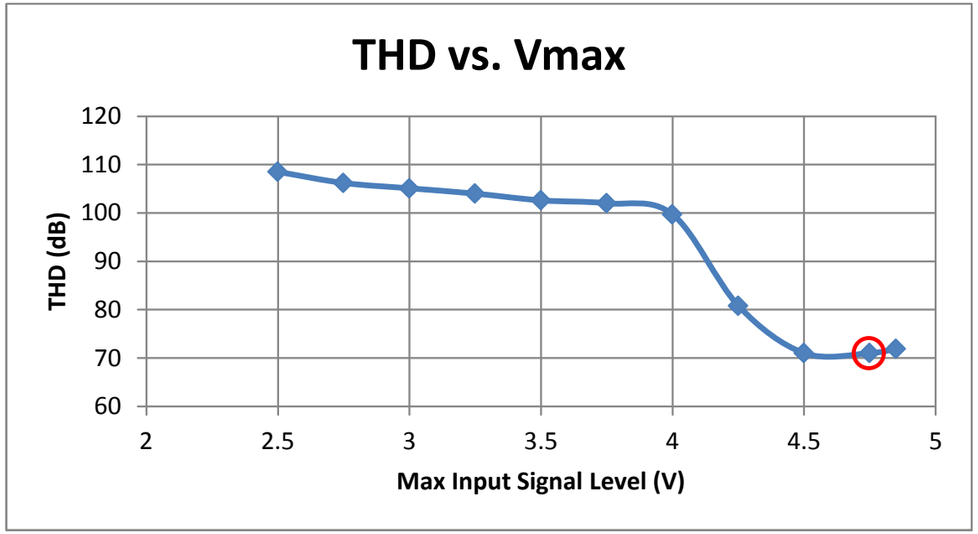

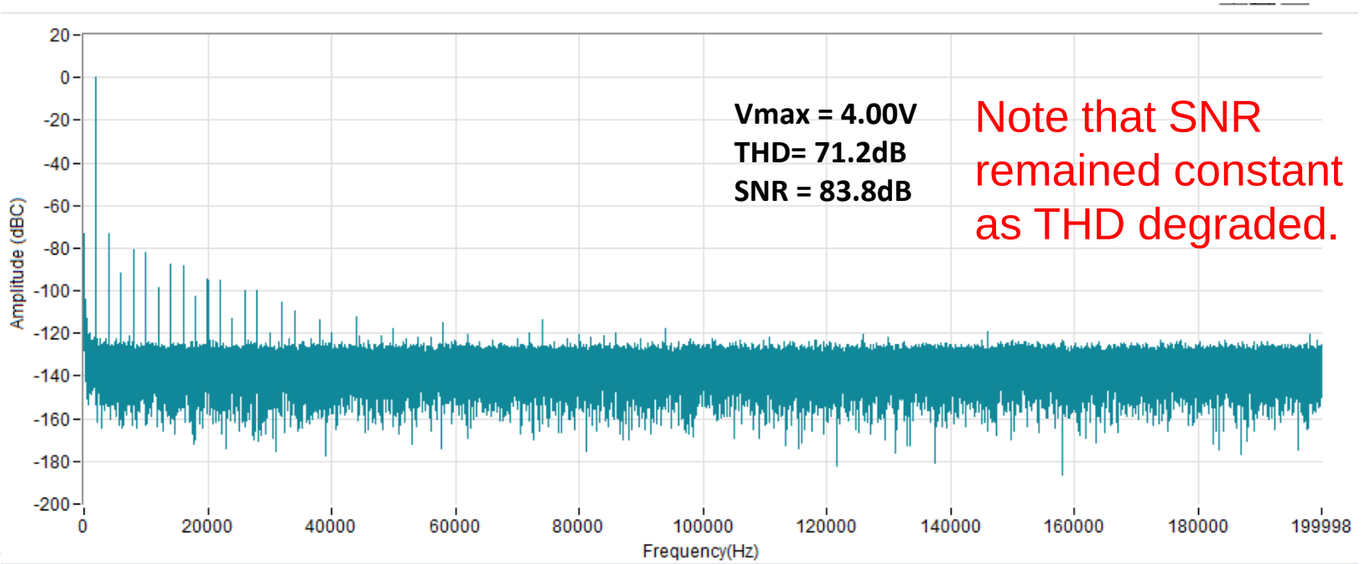

Agenda

1. **ADC Input types**
   a) Single ended, pseudo-differential, fully-differential, and true-differential
   b) Switched capacitor vs. buffered
2. **Linear operation of amplifier and ADC**
   a) Rail-to-Rail amplifiers and crossover distortion
   b) Inverting configuration
3. **Common Front Ends**
   a) **Instrumentation amplifier: Selecting gain and common mode range**
   b) **Fully Differential Amplifiers: Single Ended to Differential**
4. **Error Sources:**
   a) Statistics: Worst Case vs. Typical
   b) Offset and Gain Error
   c) Calibration
   d) Drift and Non-linearity
   e) Noise
5. **AC Specifications and the FFT**
6. **Aliasing**

Instrumentation Amplifier (INA): Choose Gain

PARAMETER ADS8681		TEST CONDITION	MIN	TYP	MAX	UNIT
ANALOG INPUT						
V_{IN}	Full-scale input voltage span	Input range = ±3 x V_{REF}	-12.288		12.288	V
		Input range = ±2.5 x V_{REF}	-10.24		10.24	
		Input range = ±1.5 x V_{REF}	-6.144		6.144	

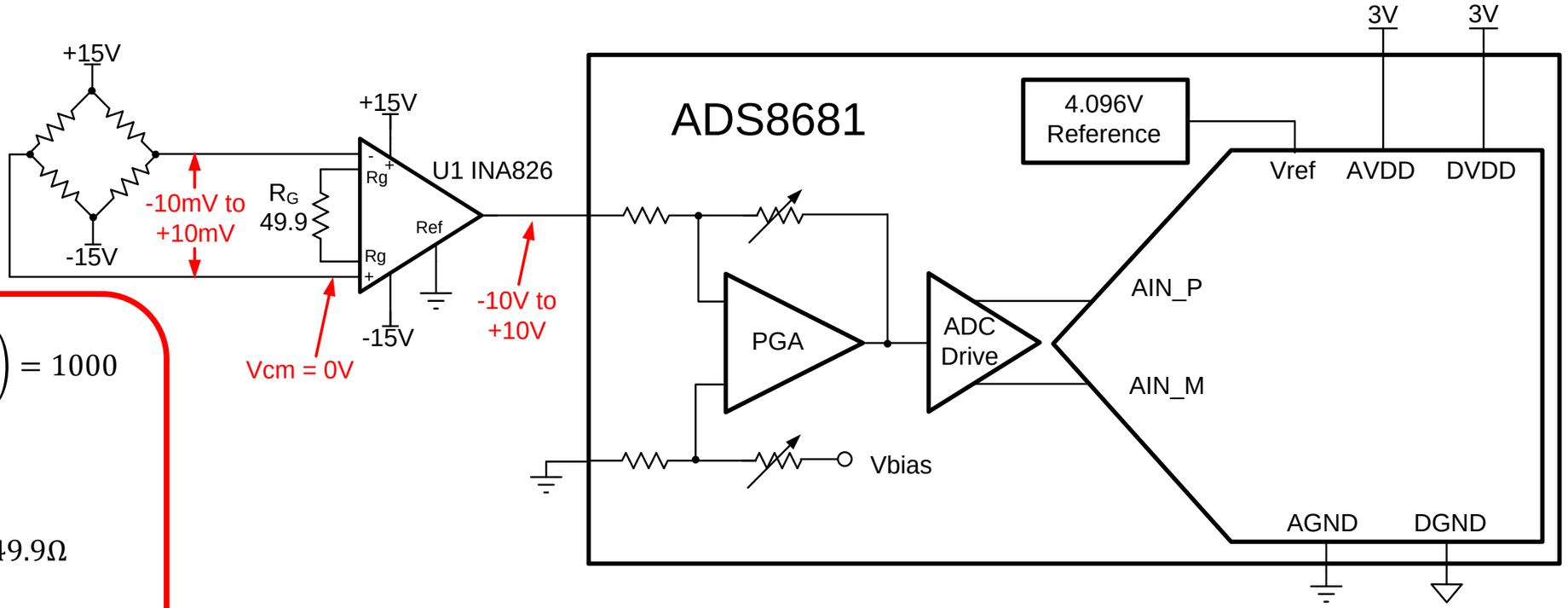

$$G_{826} = \left(\frac{\Delta V_{OUT}}{\Delta V_{IN}}\right) = \left(\frac{10V - (-10V)}{10mV - (-10mV)}\right) = 1000$$

$$G_{826} = 1 + \left(\frac{49.4k\Omega}{R_G}\right)$$

$$R_G = \frac{49.4k\Omega}{G_{826} - 1} = \frac{49.4k\Omega}{1000 - 1} = 49.5\Omega \; or \; 49.9\Omega$$

$$V_{OUT} = G_{826} \cdot V_{IN} + V_{REF}$$

$$V_{OUT} = 1000 \cdot (10mV) + 0V = 10V$$

Common mode and output swing for INAs

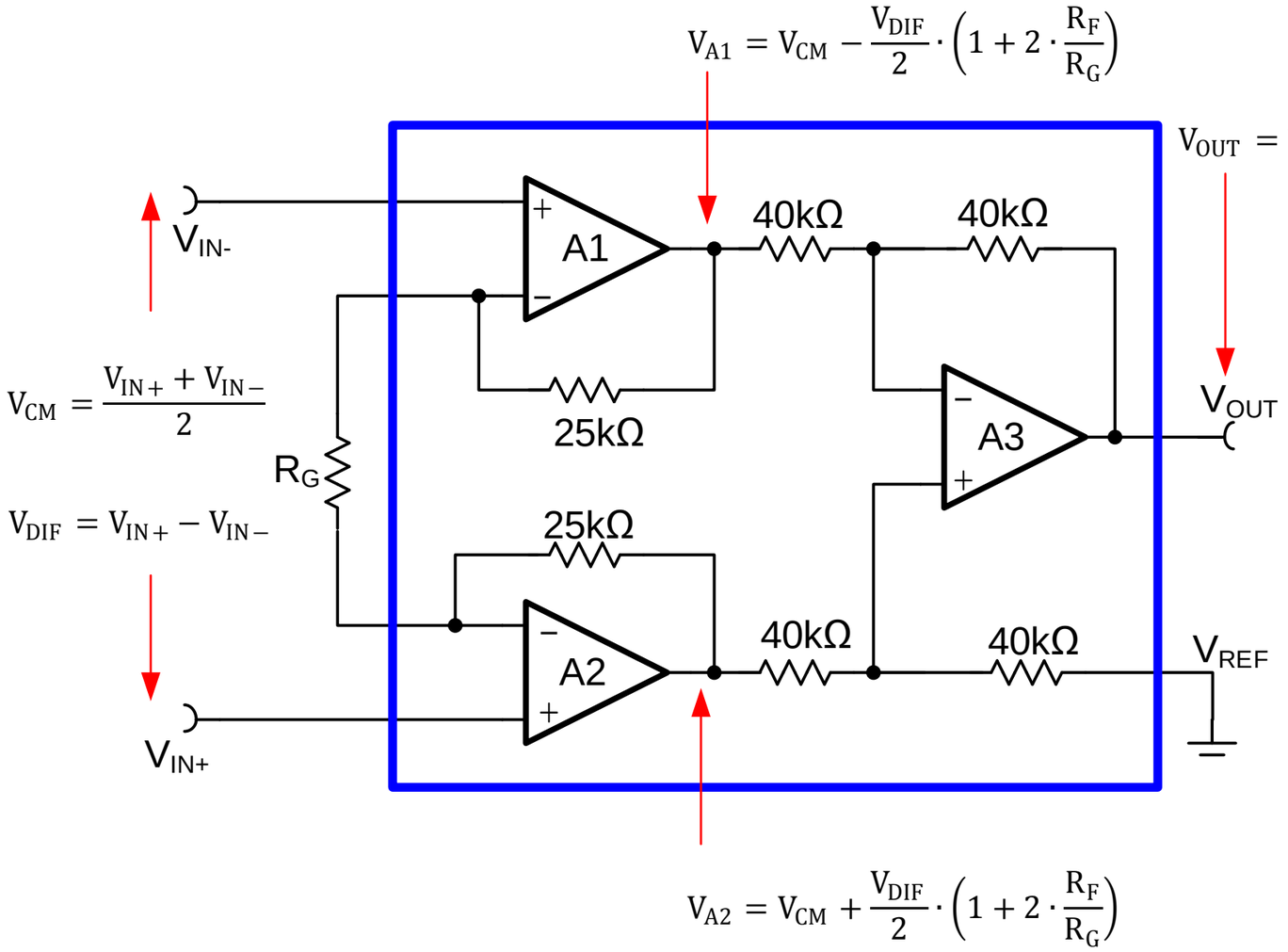

INA Common mode

- Output swing and common mode of internal amplifiers is a complex relationship.
- Different INAs have different topologies
- Vref, V+, V-, and gain determine common mode vs output swing relationship.
- A software tool simplifies this calculation

Verify INA Common Mode Range (INA826)

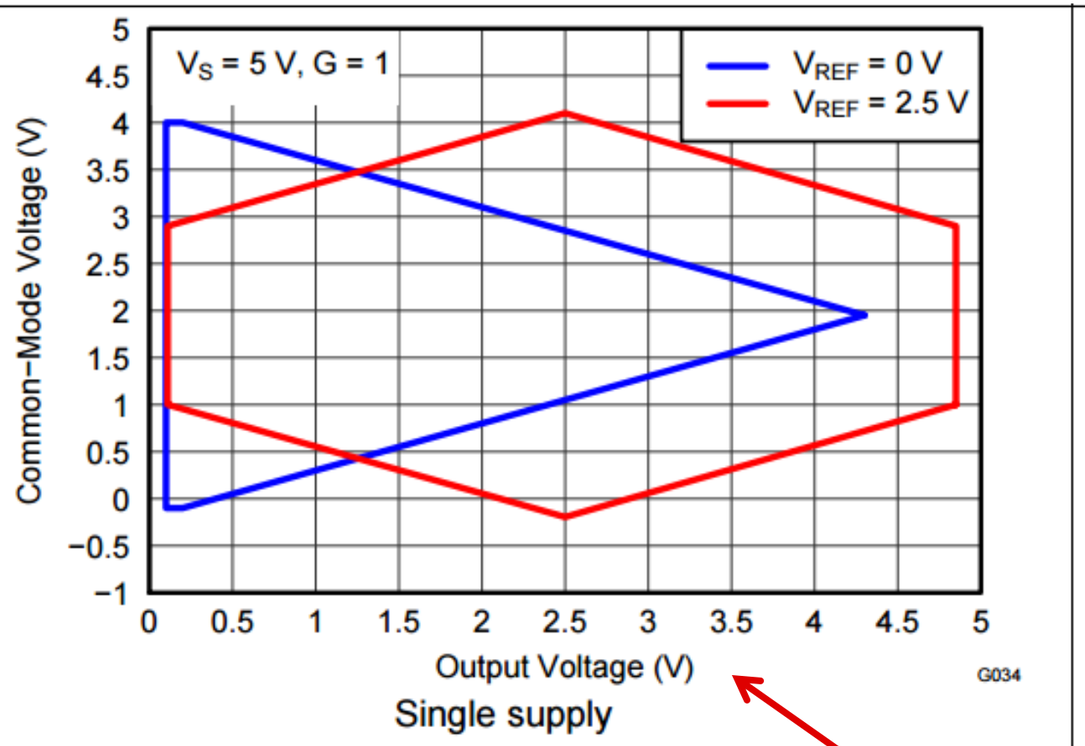

Figure 11. Input Common-Mode Voltage vs Output Voltage

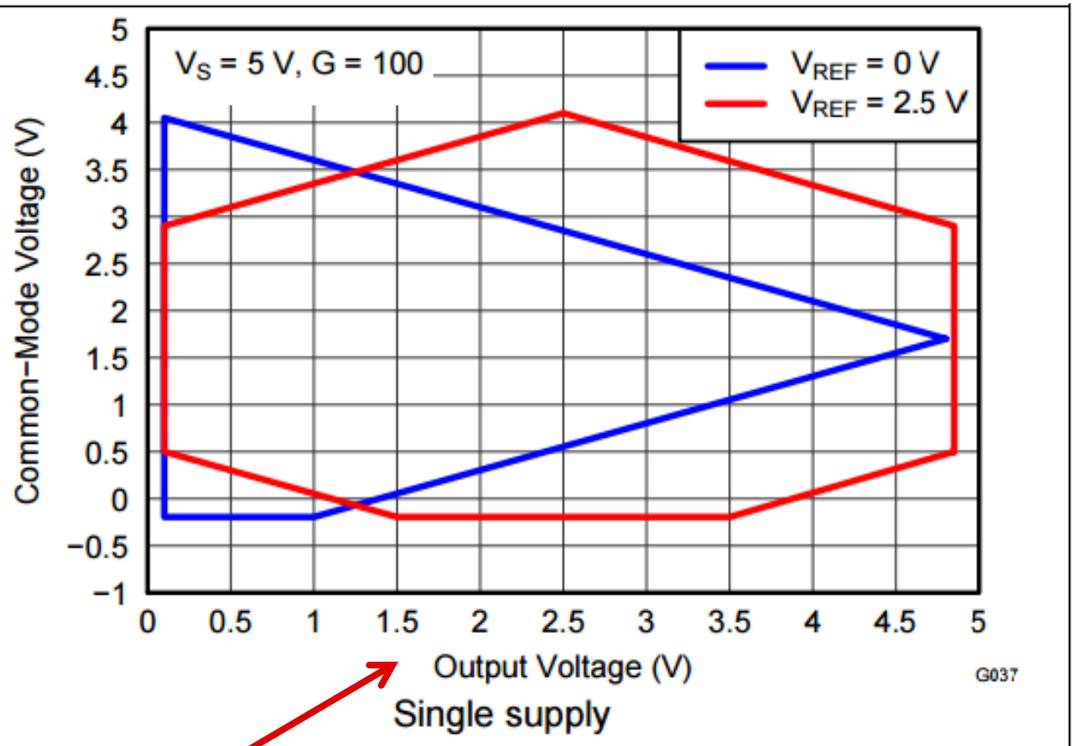

Figure 12. Input Common-Mode Voltage vs Output Voltage

Output Voltage = V_{DIF} * Gain

Verify INA Common Mode Range

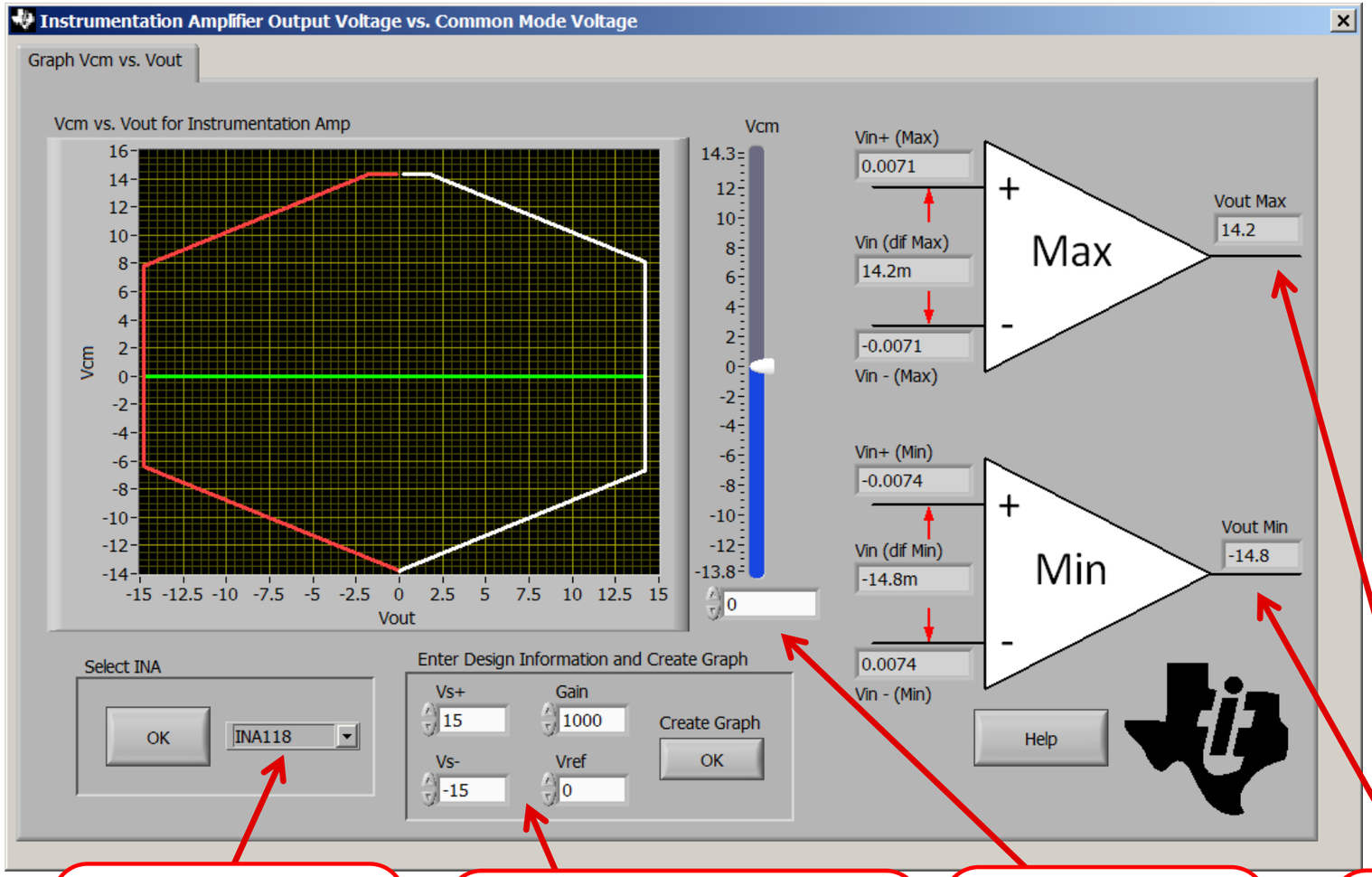

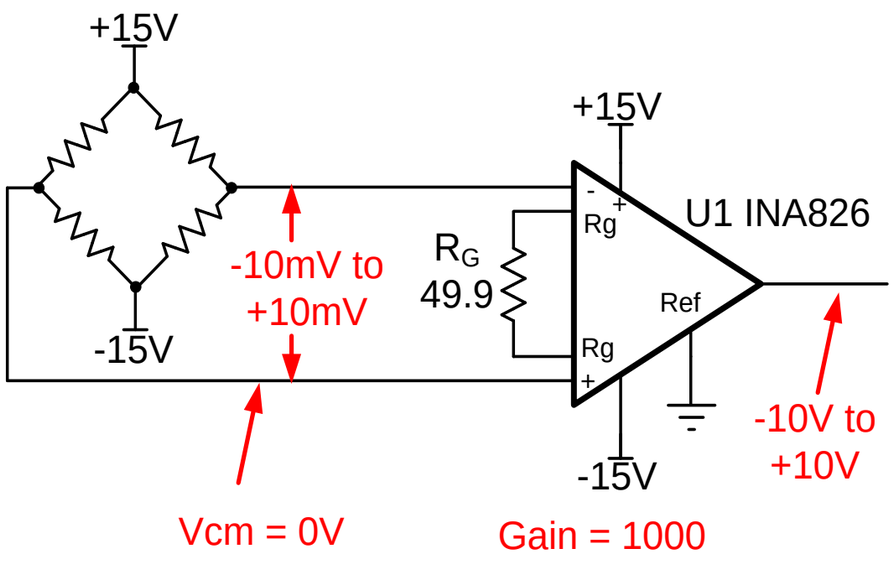

- Vout range limited to -14.8V to +14.2V
- -10V to 10V output inside the range
- http://www.ti.com/tool/ina-cmv-calc

1. Select your instrumentation amplifier

2. Enter the supplies, gain, reference and press “Create Graph”.

3. Enter the common mode voltage.

4. Does the output range work for your system?

INA: Setting the reference input

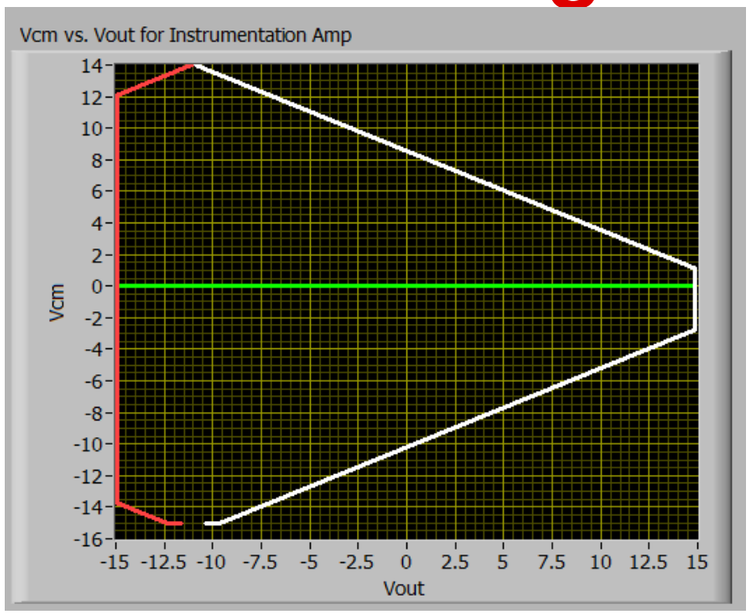

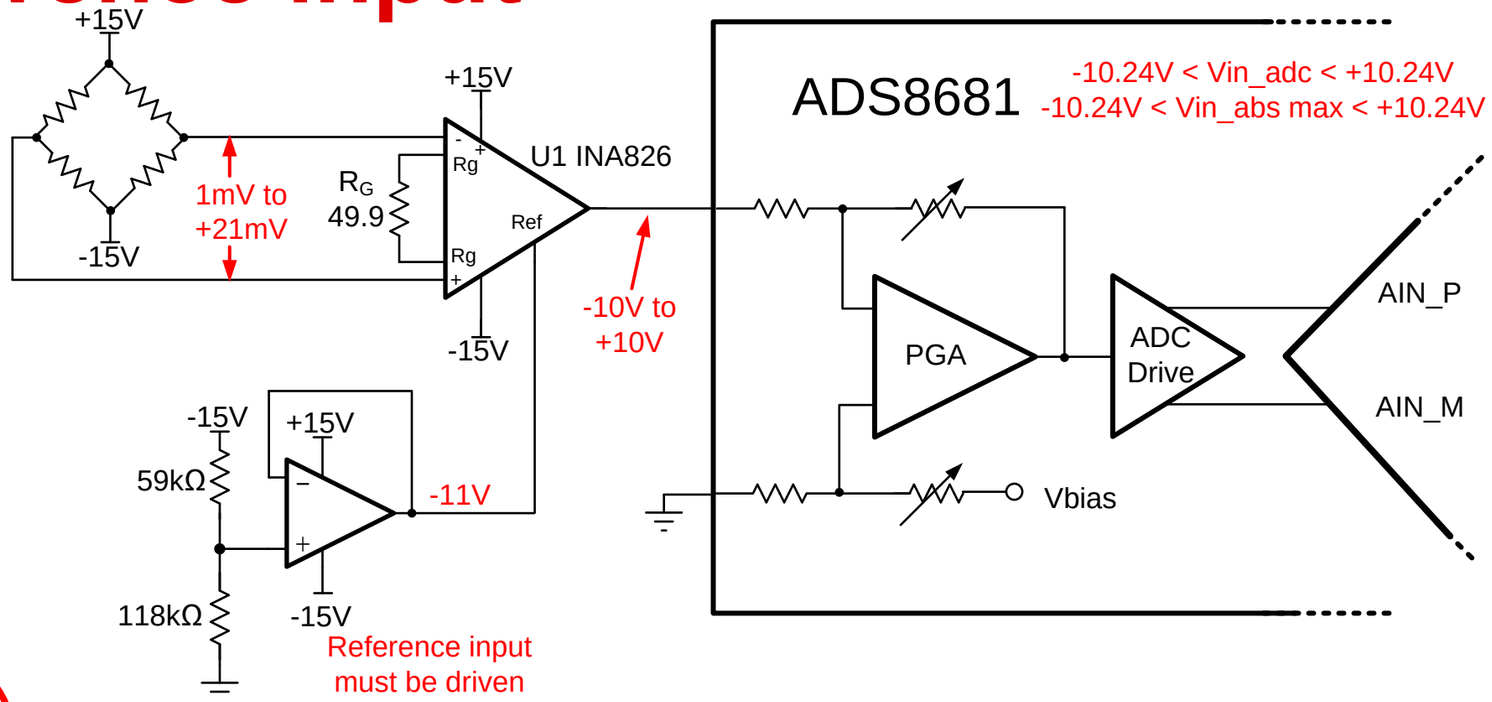

$$G_{826} = \left(\frac{\Delta V_{OUT}}{\Delta V_{IN}}\right) = \left(\frac{10V - (-10V)}{1mV - (-21mV)}\right) = 1000$$

$$G_{826} = 1 + \left(\frac{49.4k\Omega}{R_G}\right)$$

$$R_G = \frac{49.4k\Omega}{G_{826} - 1} = \frac{49.4k\Omega}{1000 - 1} = 49.5\Omega \text{ or } 49.9\Omega$$

$$V_{OUT} = G_{826} \cdot V_{IN} + V_{REF}$$

$$V_{REF} = V_{OUT_Min} - G_{826} \cdot V_{IN_Min}$$

$$V_{REF} = -10V - (1000)(1mV) = -11V$$

- Gain is calculated same as before
- Negative Vref input to shift the signal
- Reference input must be driven

Output range limited by input common mode

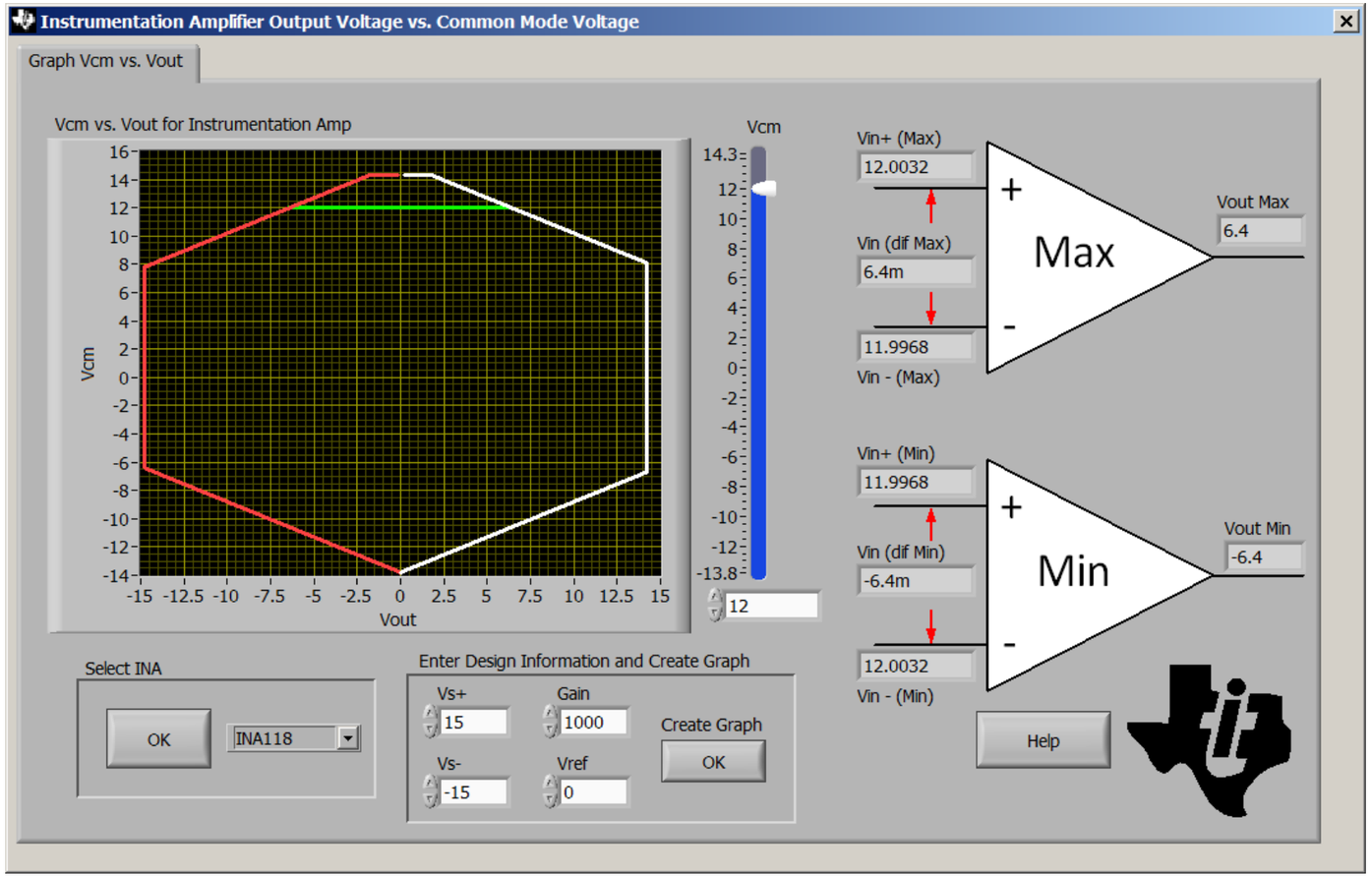

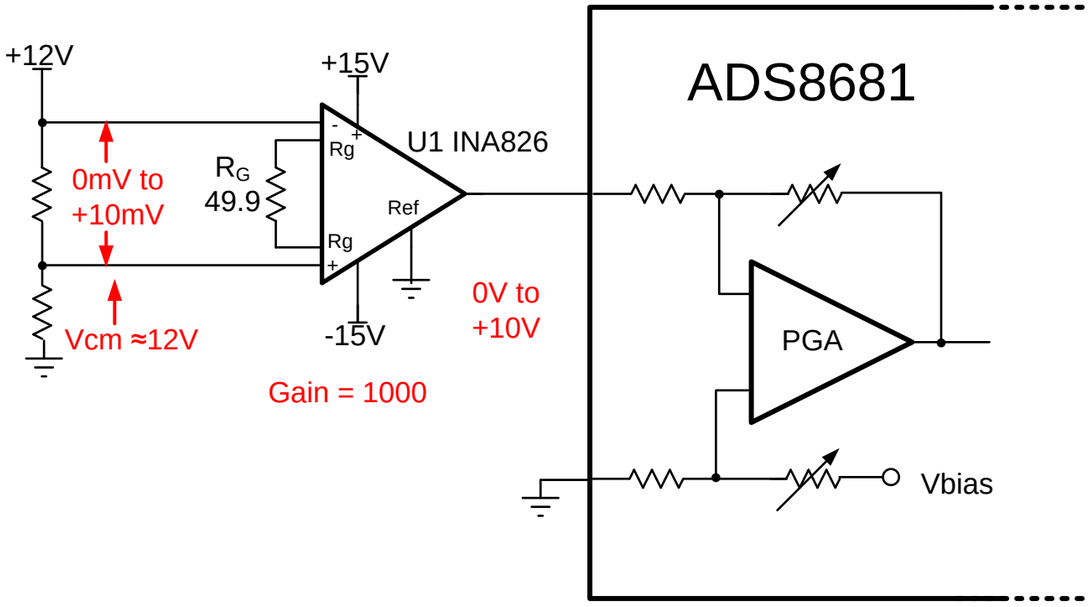

- Vout range limited to ±6.4V
- Cannot achieve 0 to 10V output

Two Stage Approach

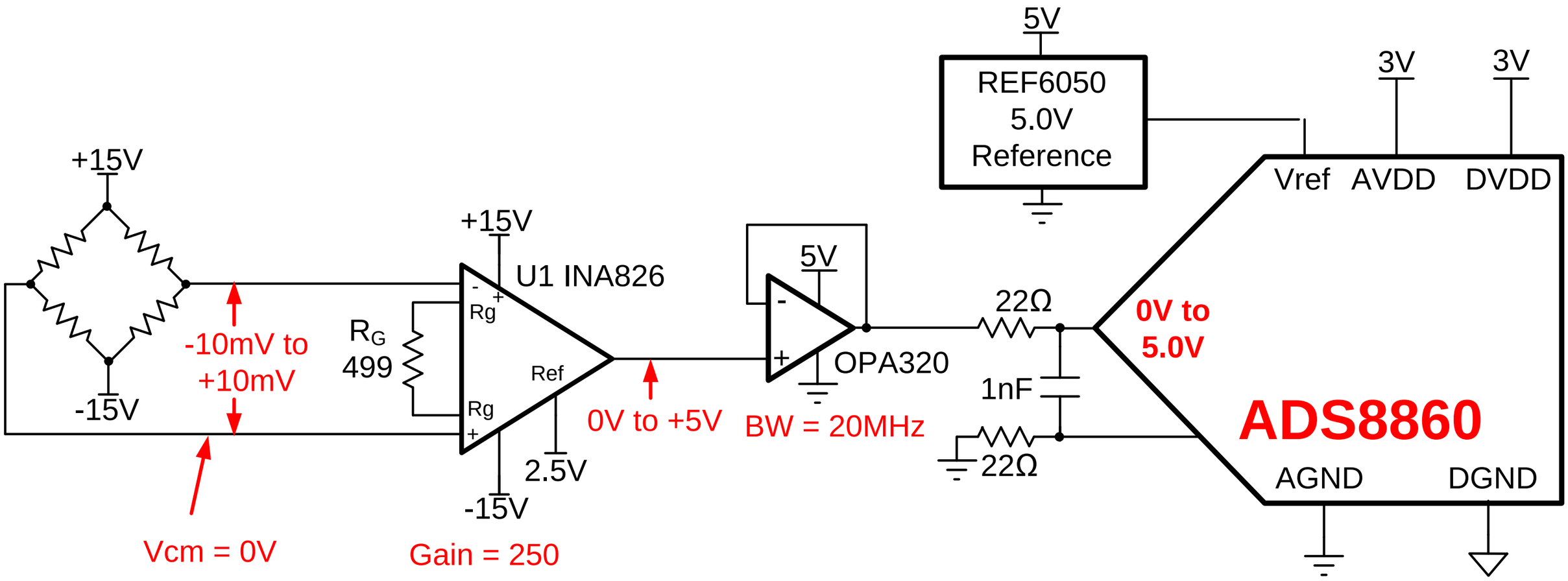

Precision DC Input **Wide Bandwidth Driver**

Fully Differential Amplifier or FDA

Standard Operational Amplifier

- Differential in
- Single-ended out
- Output Common Mode is Vout
- Single feedback paths

Fully-Differential Amplifier

- Differential in
- Differential out
- Output Common-mode set by Vocm
- Multiple feedback paths
- Double the dynamic range of amplifier
- Even order harmonic distortion canceled

Fully Differential Amplifier or FDA

Vout+ = Vcm + Vdif/2
= 2.5V + 1V/2 = 3V

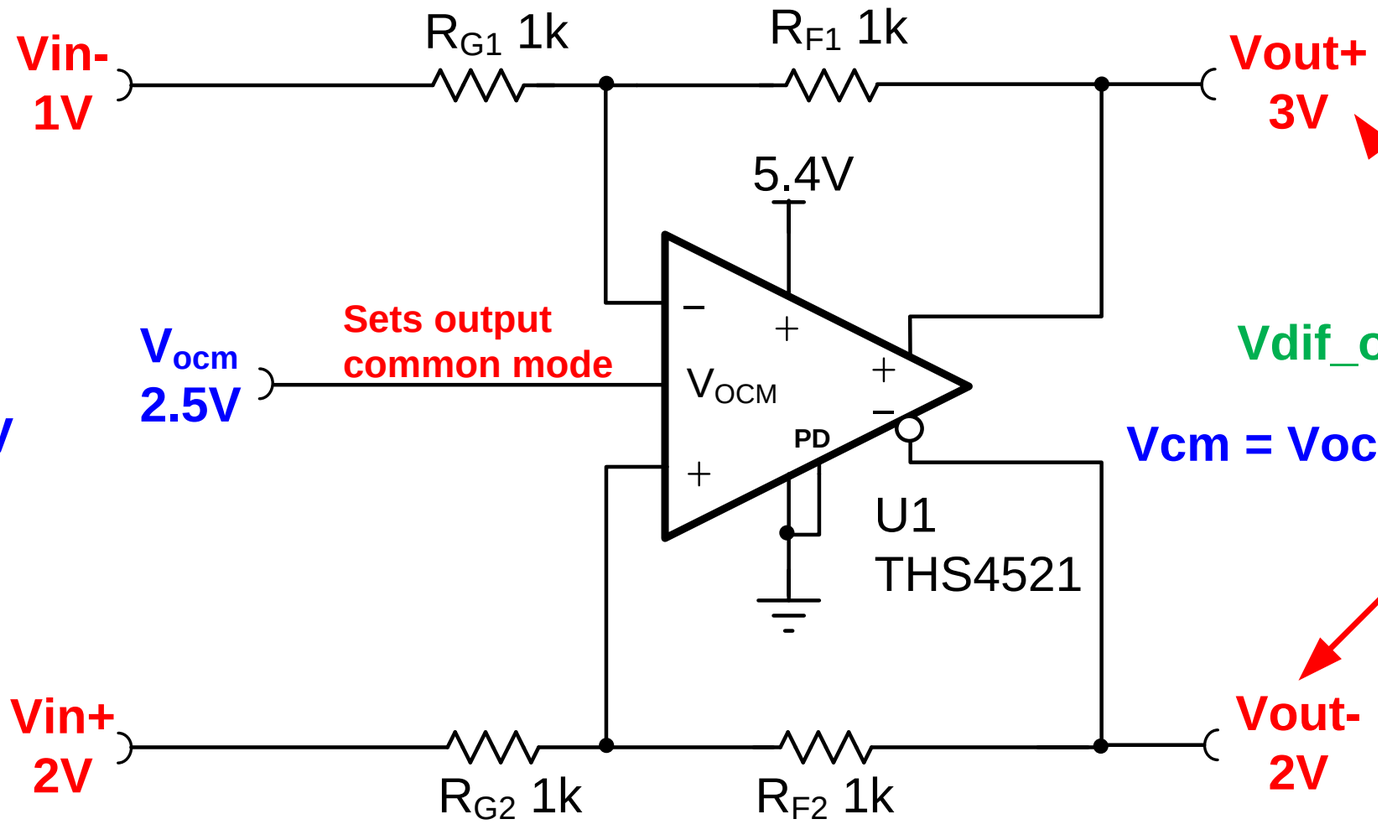

Vout- = Vcm - Vdif/2
= 2.5V - 1V/2 = 2V

FDA – Single Ended Unipolar to Differential

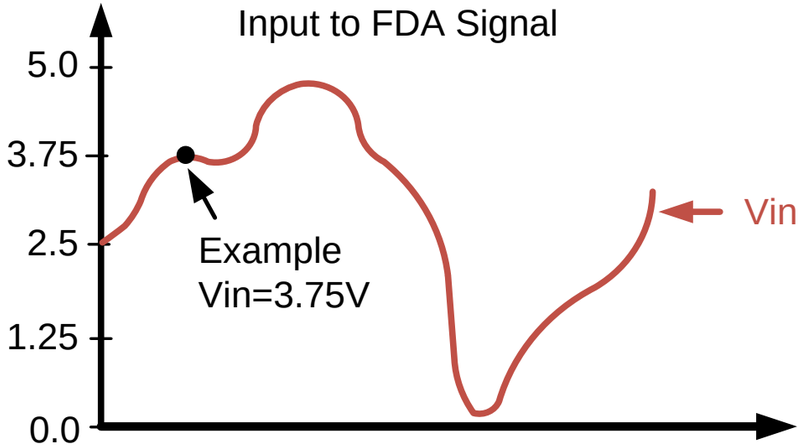

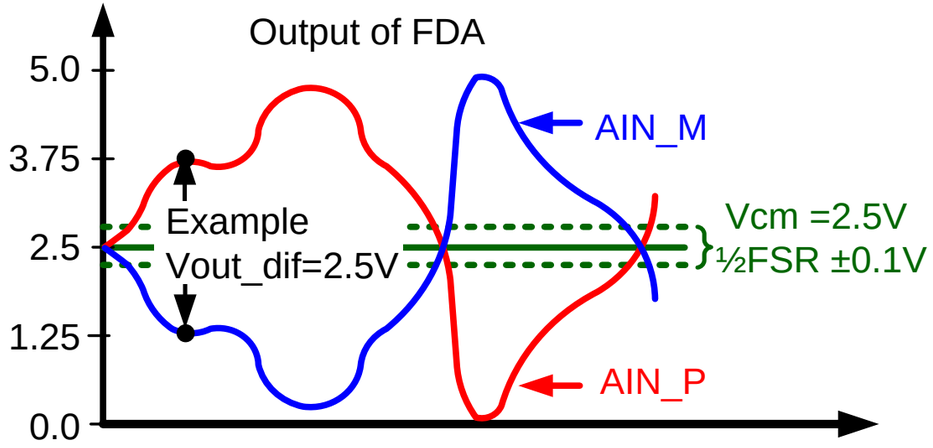

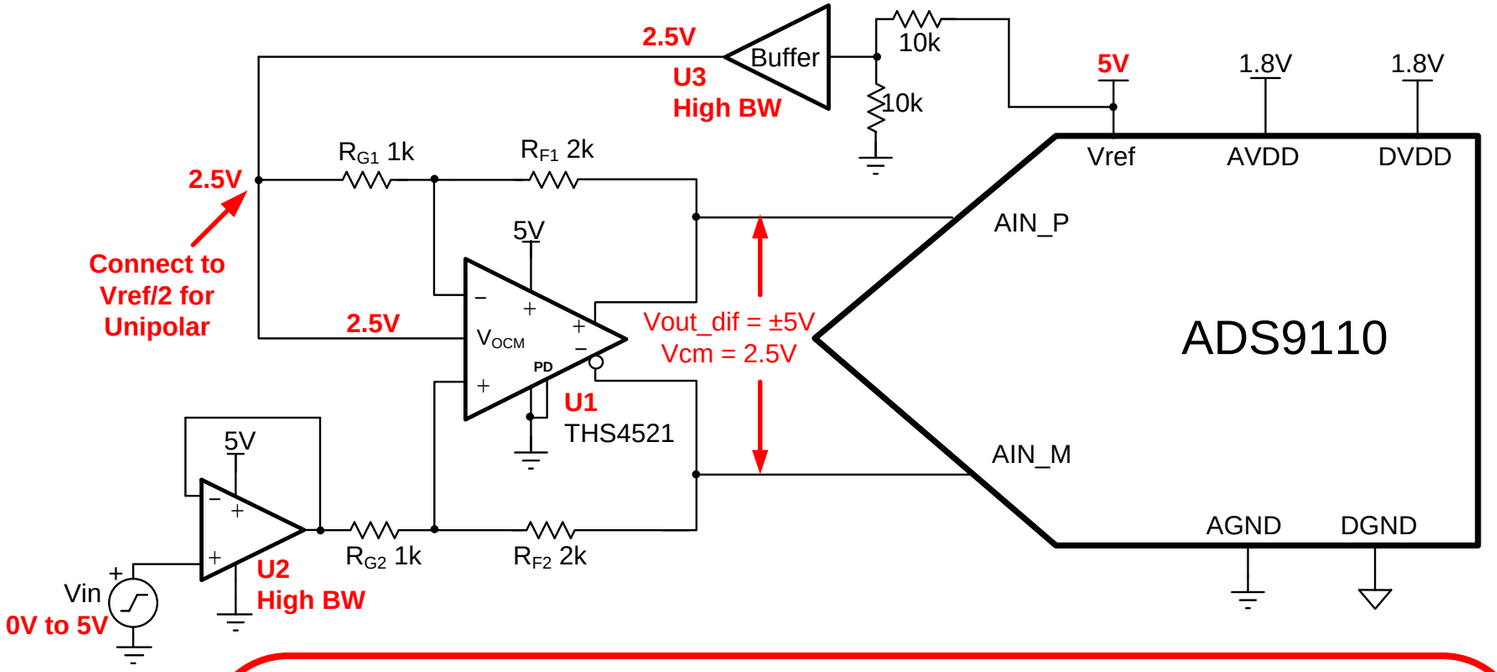

Equations for this Configuration

$$A_{vdif} = \frac{R_F}{R_G}$$

$$V_{OutP} = \left(\frac{A_{vdif}}{2}\right) \cdot (V_{in} - V_{OCM}) + V_{OCM}$$

$$V_{OutN} = -\left(\frac{A_{vdif}}{2}\right) \cdot (V_{in} - V_{OCM}) + V_{OCM}$$

$$V_{OutDif} = A_{vdif} \cdot (V_{in} - V_{OCM})$$

Example Calculation: $V_{in} = 3.75V$

$$A_{vdif} = \frac{R_F}{R_G} = \frac{2k\Omega}{1k\Omega} = 2\,V/V$$

$$V_{OutP} = \left(\frac{2}{2}\right) \cdot (3.75V - 2.5V) + 2.5V = 3.75V$$

$$V_{OutN} = -\left(\frac{2}{2}\right) \cdot (3.75V - 2.5V) + 2.5V = 1.25V$$

$$V_{OutDif} = 2 \cdot (3.75V - 2.5V) = 2.5V$$

FDA – Single Ended Bipolar to Differential

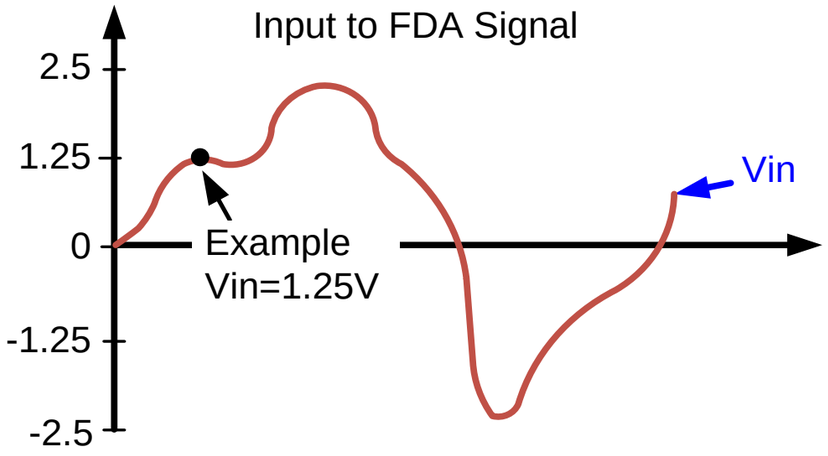

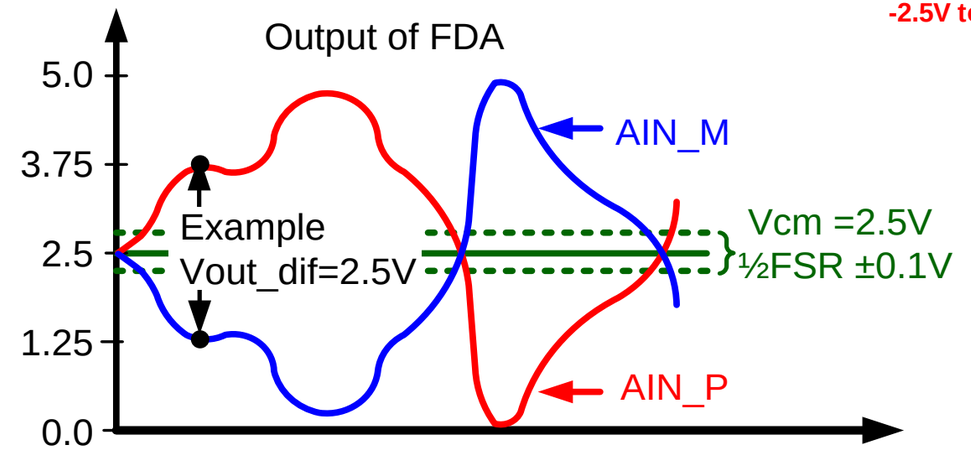

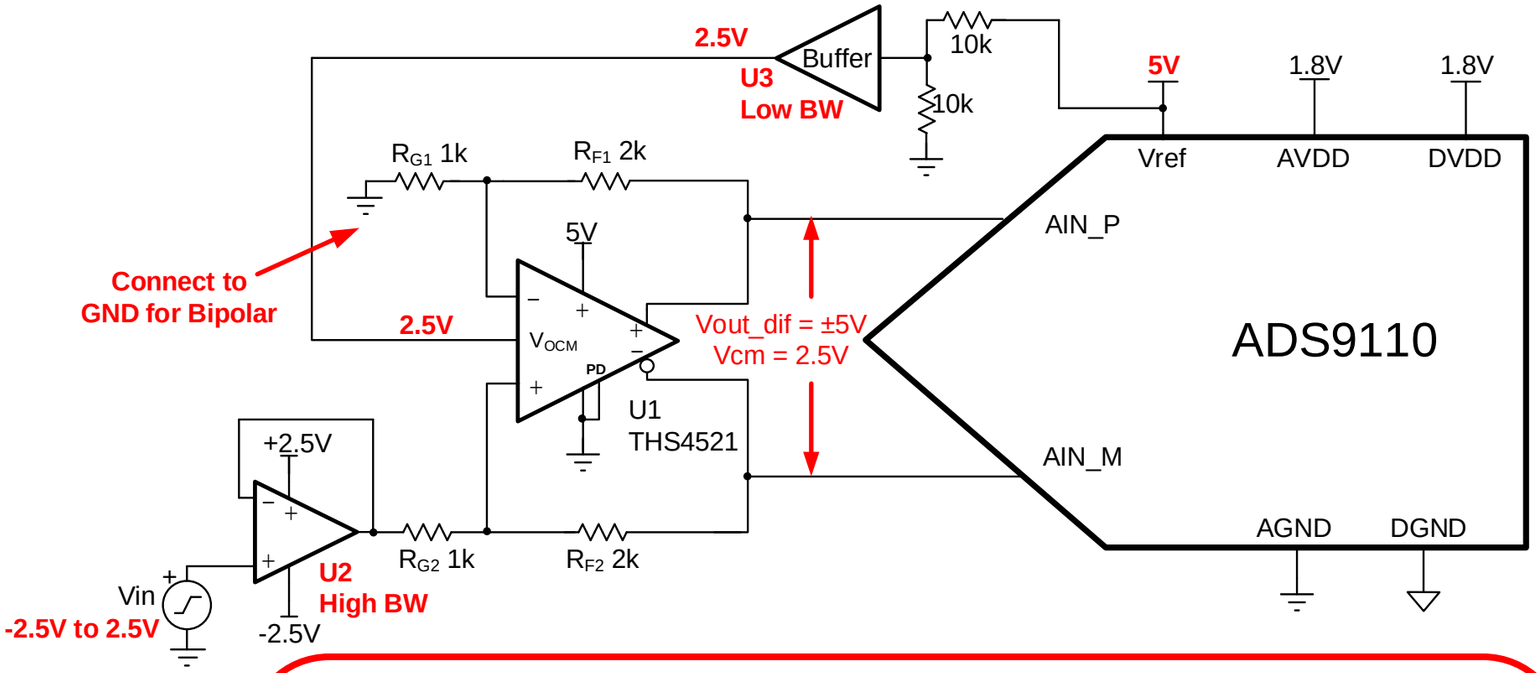

Equations for this Configuration

$$A_{vdif} = \frac{R_F}{R_G}$$

$$V_{OutP} = \left(\frac{A_{vdif}}{2}\right) \cdot (V_{in}) + V_{OCM}$$

$$V_{OutN} = -\left(\frac{A_{vdif}}{2}\right) \cdot (V_{in}) + V_{OCM}$$

$$V_{OutDif} = A_{vdif} \cdot (V_{in})$$

Example Calculation: $V_{in} = 1.25V$

$$A_{vdif} = \frac{R_F}{R_G} = \frac{2k\Omega}{1k\Omega} = 2\,V/V$$

$$V_{OutP} = \left(\frac{2}{2}\right) \cdot (1.25V) + 2.5V = 3.75V$$

$$V_{OutN} = -\left(\frac{2}{2}\right) \cdot (1.25V) + 2.5V = 1.25V$$

$$V_{OutDif} = 2 \cdot (3.75V - 1.25V) = 2.5V$$

Improve Linear Range

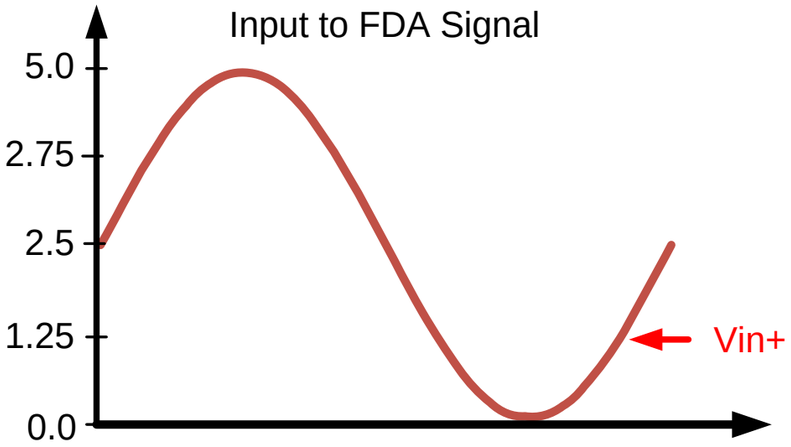

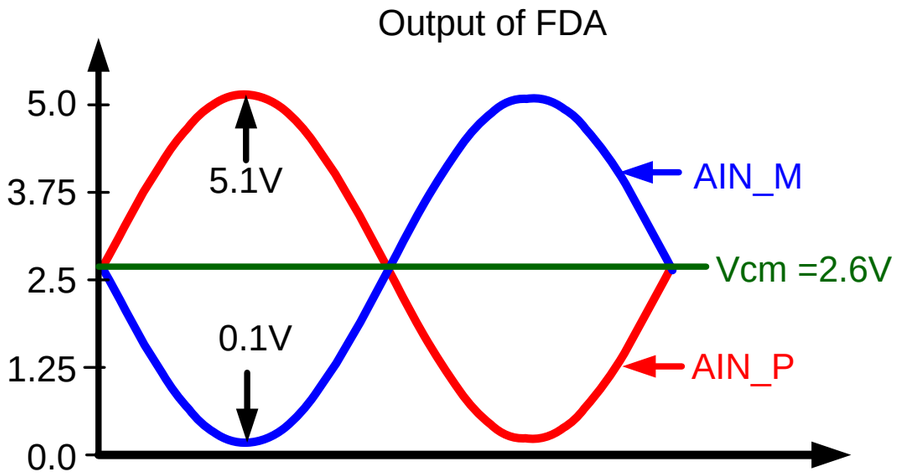

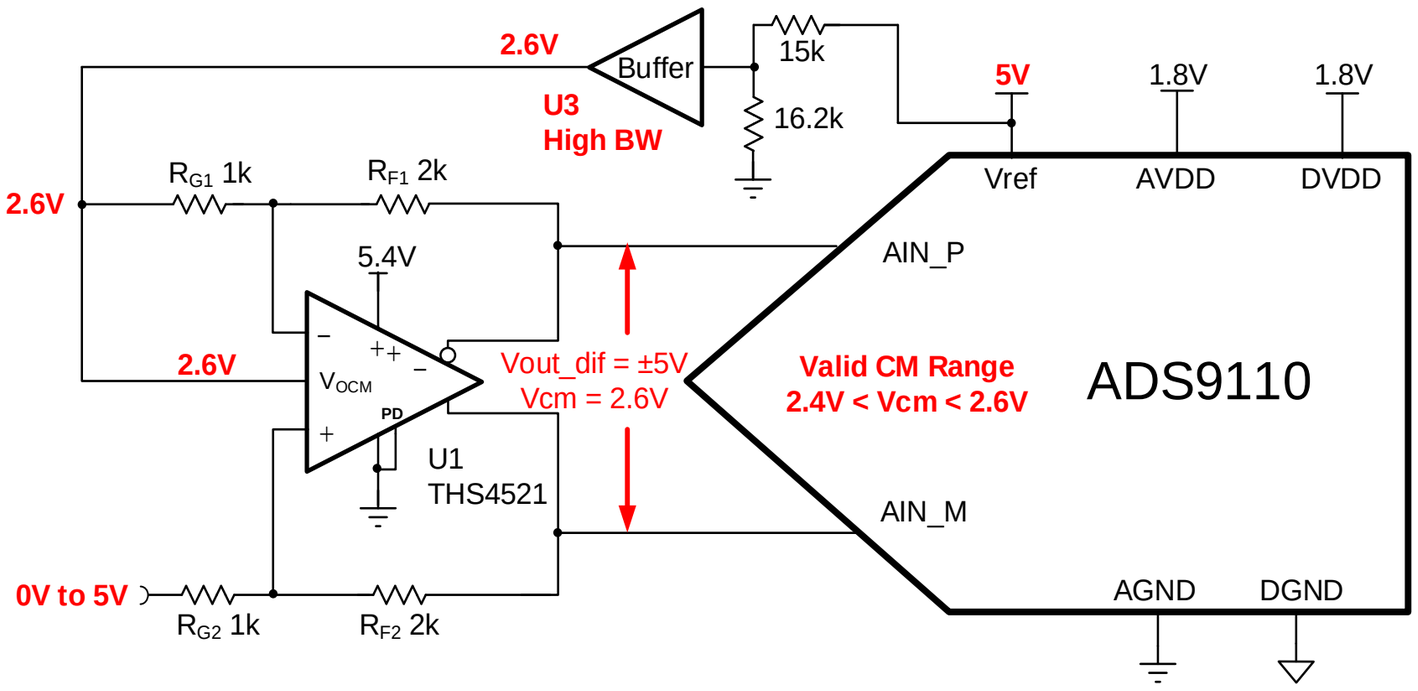

PARAMETER THS4521		MIN	TYP	MAX	UNIT
Output voltage low			(V-) + 0.1	(V-) + 0.15	V
Output voltage high		(V+) – 0.3	(V+) – 0.25		V

PARAMETER ADS9110		MIN	TYP	MAX	UNIT
Full-scale input voltage span		-Vref		Vref	V
Absolute Input voltage range	AIN to GND	-0.1		AVDD+0.1	V
Common-mode voltage range		(Vref/2)-0.1	Vref/2	(Vref/2)+0.1	V

Finding standard resistors for unusual gains

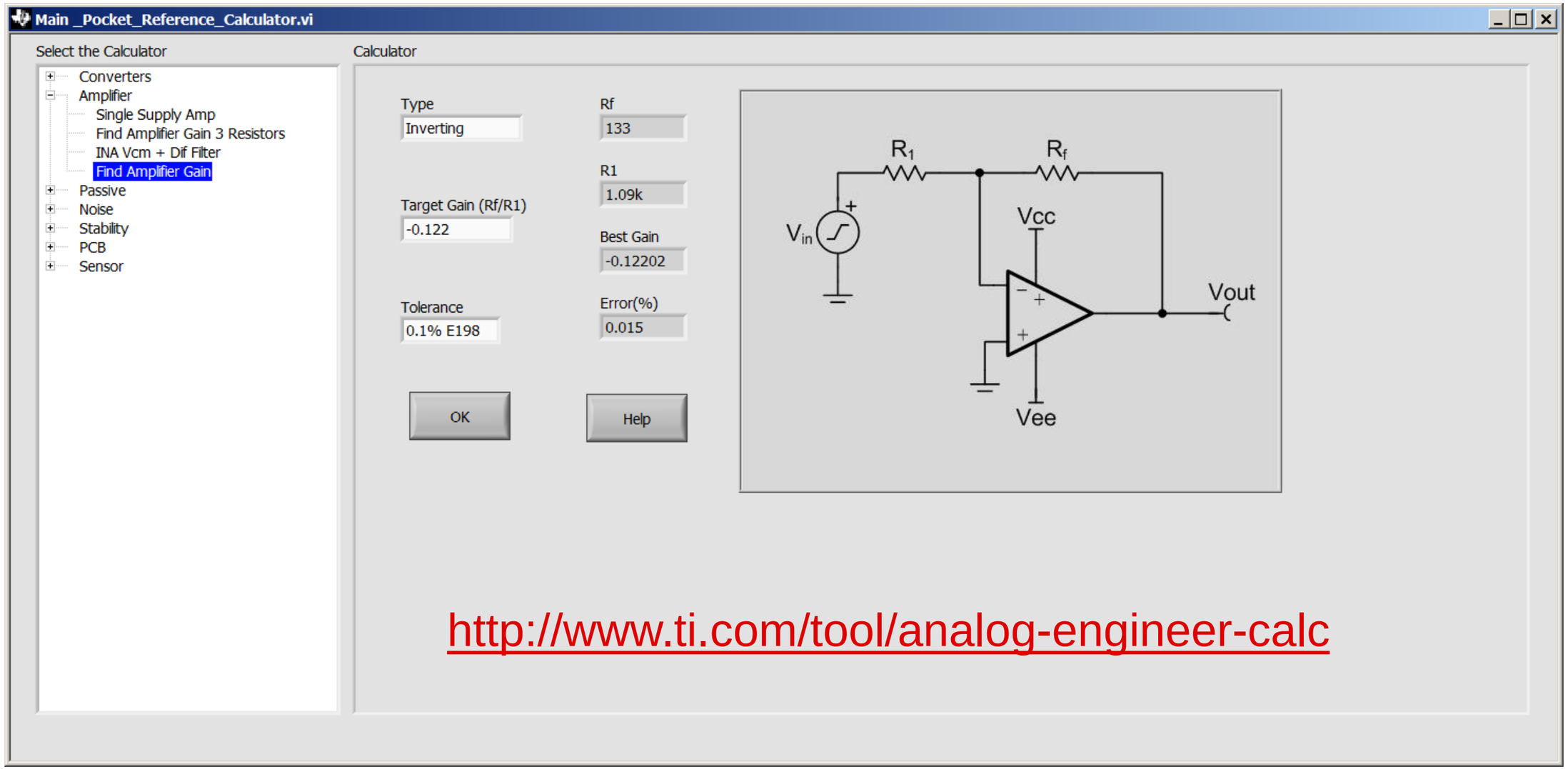

http://www.ti.com/tool/analog-engineer-calc

Agenda

1. **ADC Input types**
   a) Single ended, pseudo-differential, fully-differential, and true-differential
   b) Switched capacitor vs. buffered
2. **Linear operation of amplifier and ADC**
   a) Rail-to-Rail amplifiers and crossover distortion
   b) Inverting configuration
3. **Common Front Ends**
   a) Instrumentation amplifier: Selecting gain and common mode range
   b) Fully Differential Amplifiers: Single Ended to Differential
4. **Error Sources:**
   a) **Statistics: Worst Case vs. Typical**
   b) **Offset and Gain Error**
   c) **Calibration**
   d) **Drift and Non-linearity**
   e) **Noise**
5. **AC Specifications and the FFT**
6. **Aliasing**

Find the worst case offset

Device	PARAMETER	MIN	TYP	MAX	UNITS
LMP8481	V_{OS} Offset Error	-265	±80	+265	µV
OPA320	V_{OS} Offset Error	-150	±40	+150	µV
ADS8860	E_O Offset Error	-4	±1	+4	mV

Worst case offset at ADS Input
$V_{osT} = Gain \cdot V_{U1} + V_{U2} + V_{U3}$
$V_{osT} = 20 \cdot (265\mu V) + (150\mu V) + (4mV)$
$V_{osT} = 9.27mV$

This result may be statistically unrealistic

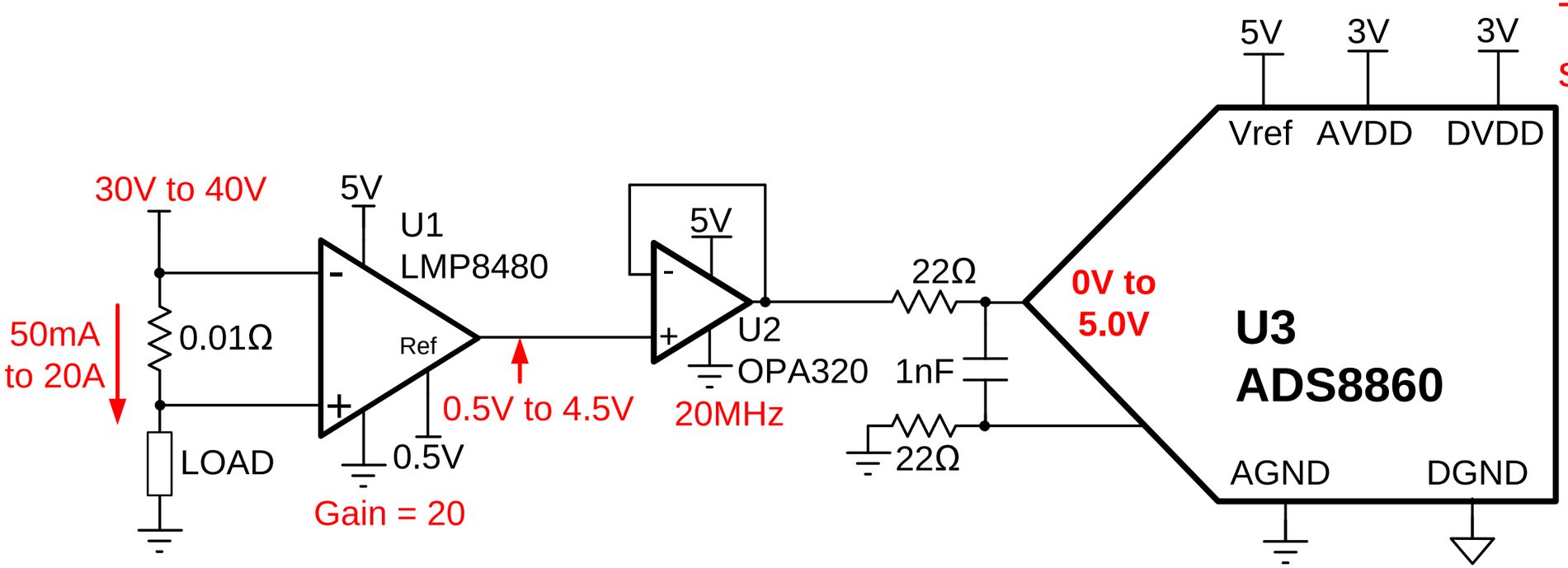

Statistics Behind Typical and Maximum

PARAMETER ADS8860		MIN	TYP	MAX	UNITS
E_O	Offset Error	-4	±1	+4	mV
E_G	Gain Error	-0.01	±0.005	+0.01	%FSR

Gaussian Distribution

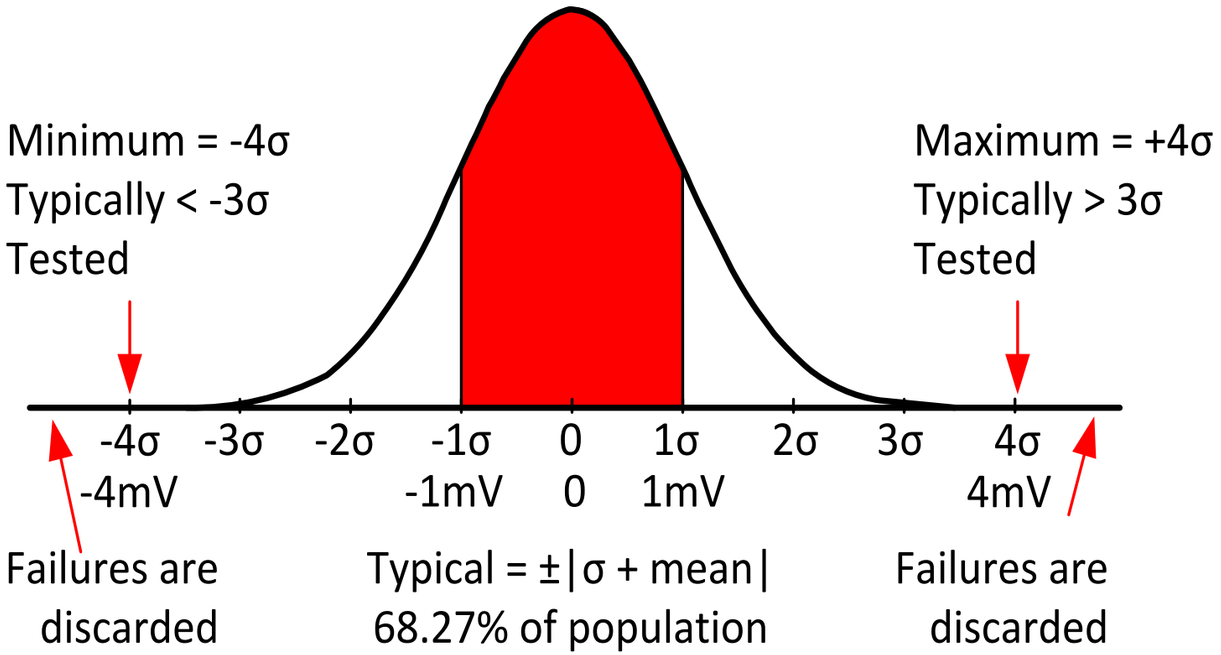

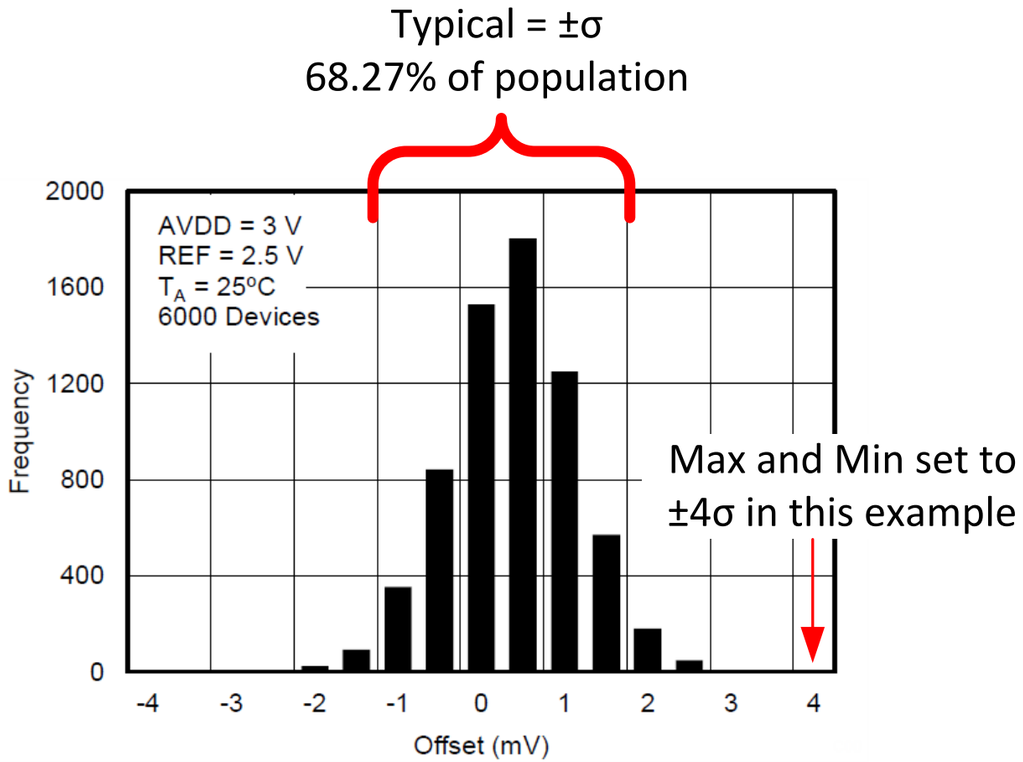

Figure 41. TYPICAL DISTRIBUTION OF OFFSET ERROR

Probability that we are near worst case

PARAMETER ADS8860		MIN	TYP	MAX	UNITS
E_O	Offset Error	-4	±1	+4	mV
E_G	Gain Error	-0.01	±0.005	+0.01	%FSR

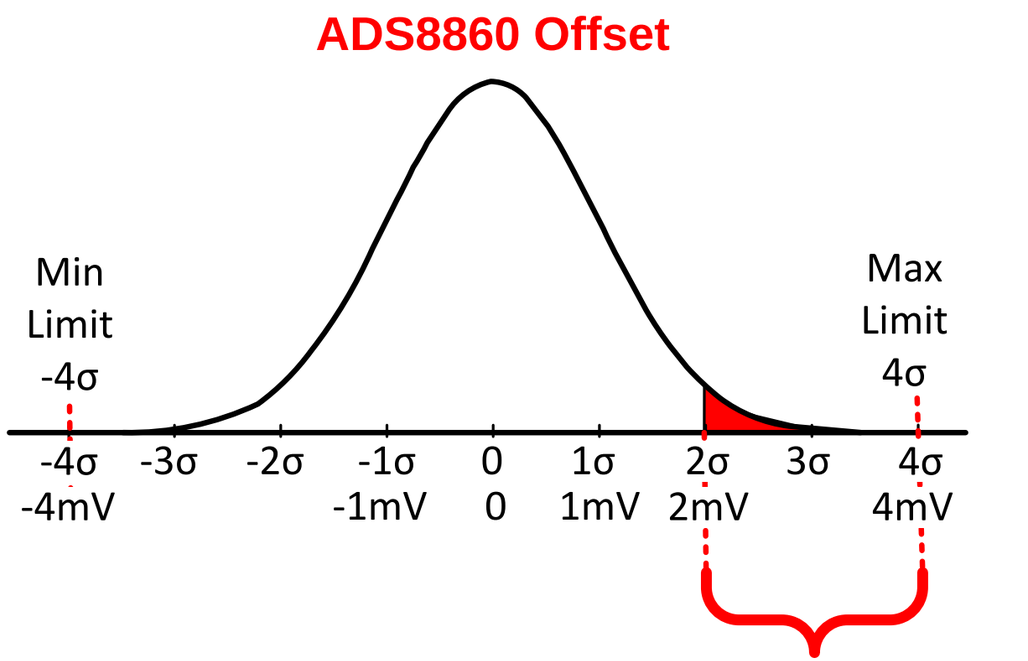

2mV < Offset < 4mV
Probability = P(C) = 2.272%

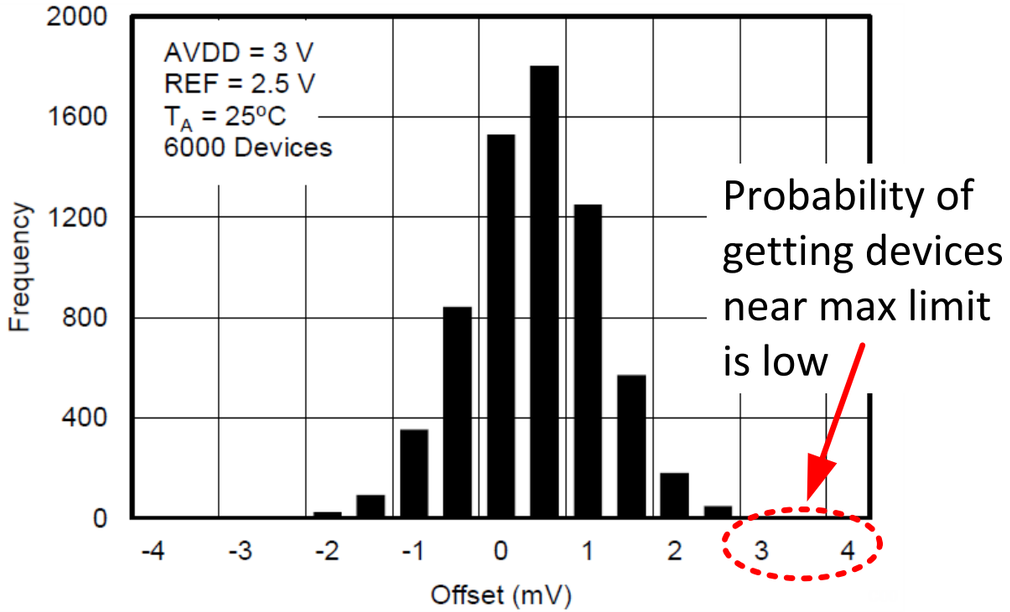

Figure 41. TYPICAL DISTRIBUTION OF OFFSET ERROR

Compounding probabilities “near” worst case

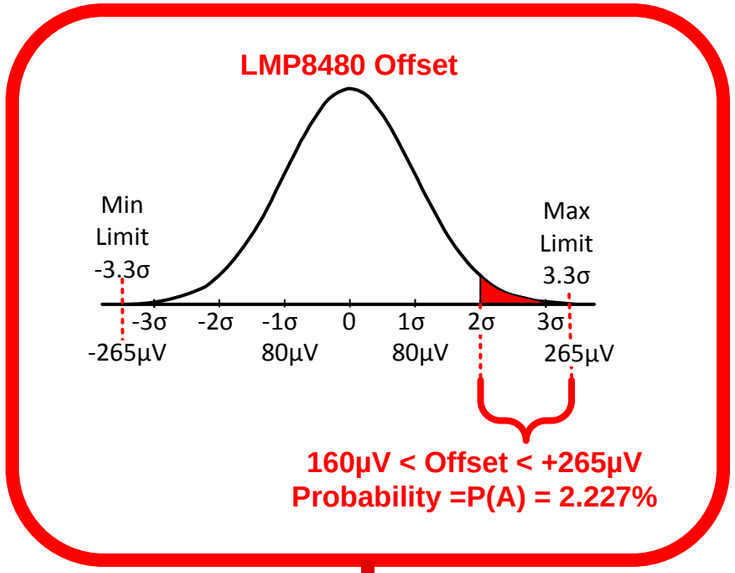

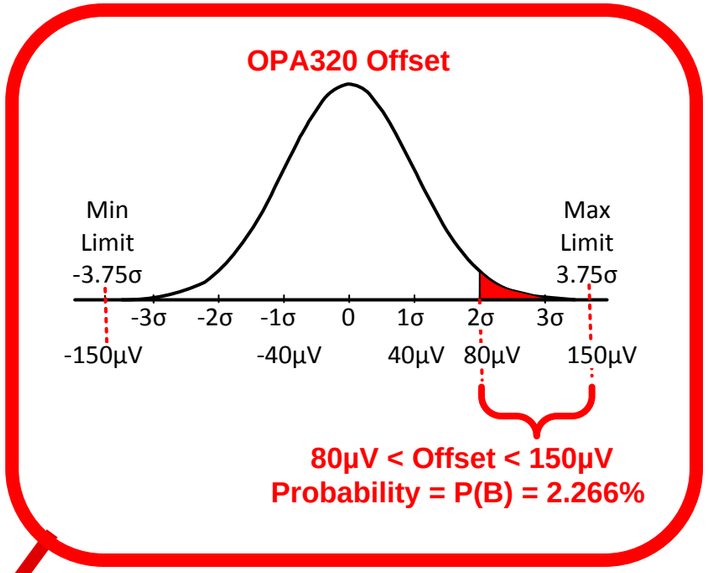

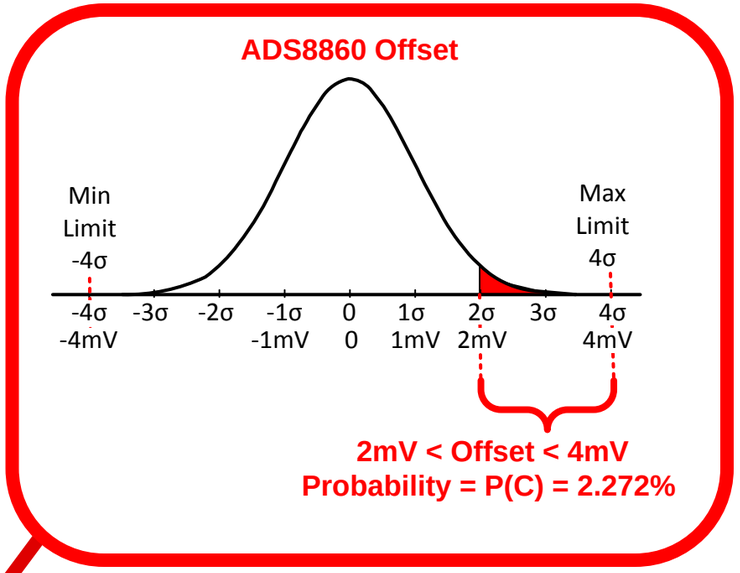

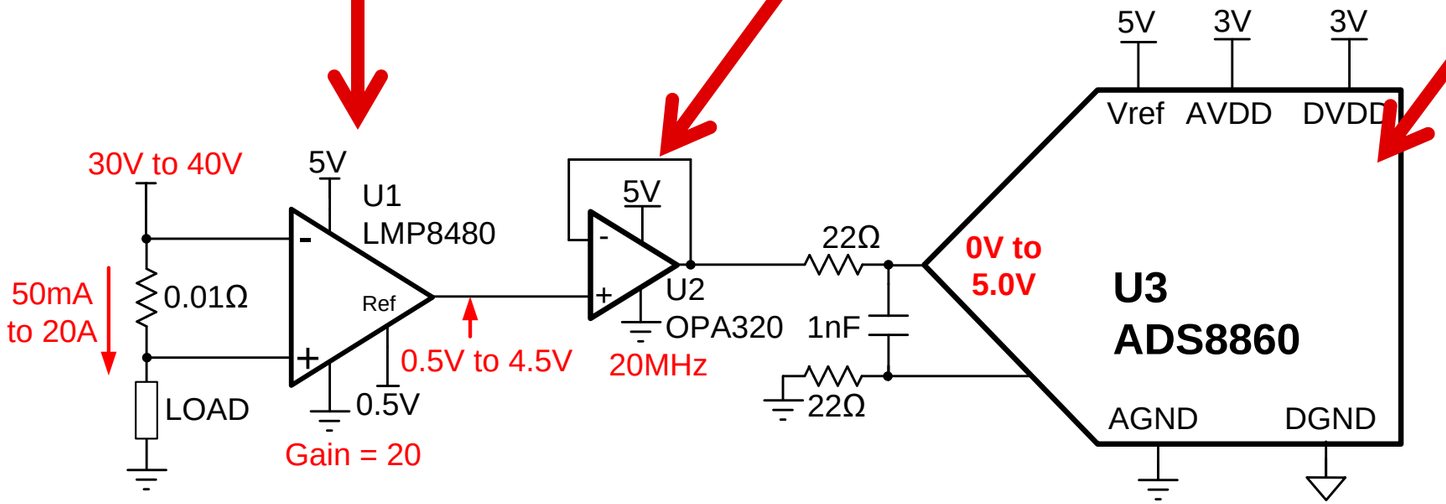

The probability that all three offsets are near worst case
$P = P(A) \cdot P(B) \cdot P(C)$
$P = (0.02227)(0.02266)(0.02272)$
$\%P = 100 \cdot P = 0.0011\%$

A more practical approach: use the typical limit

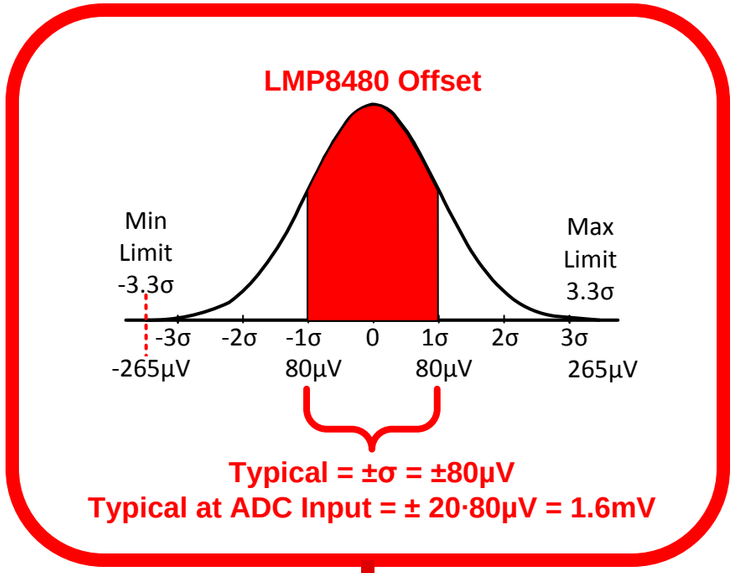

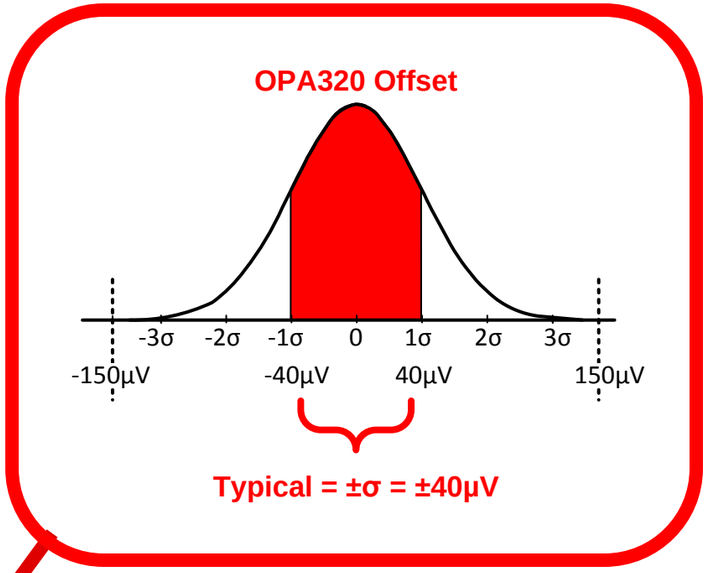

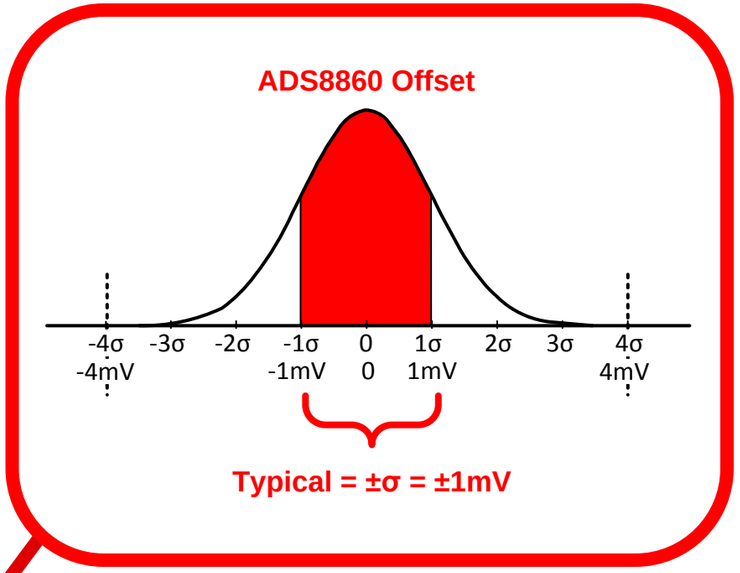

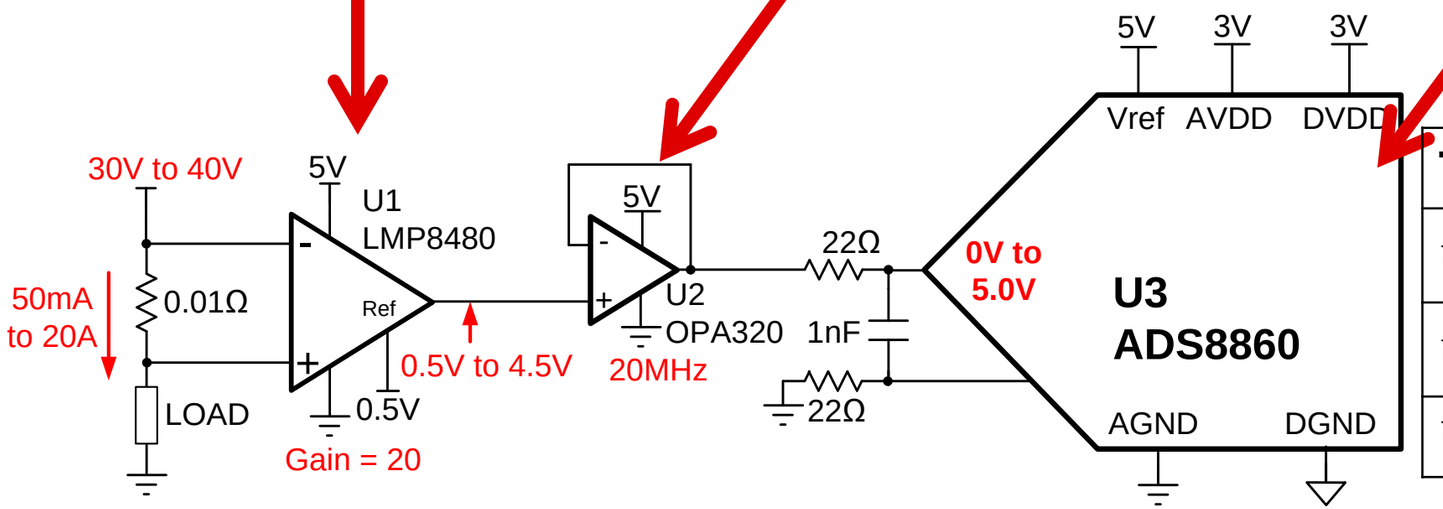

Typical offset at ADC Input
$V_{osT} = \sqrt{(20 \cdot V_{osINA})^2 + (V_{osOPA})^2 + (V_{osADS})^2}$
$V_{osT} = \sqrt{(20 \cdot 80\mu V)^2 + (40\mu V)^2 + (1mV)^2}$
$V_{osT} = 1.887mV$

A more practical approach: use typical

Number of Standard deviations	Probability Inside limit	Probability Outside limit
±1·σ	68.27%	31.73%
±2·σ	95.45%	4.55%
±3·σ	99.73%	0.27%
±4·σ	99.9937%	0.0063%
±5·σ	99.99994%	$5.73 \cdot 10^{-5}$ %
±6·σ	≈100%	$1.97 \cdot 10^{-7}$ %

Set end system specifications based on risk tolerance

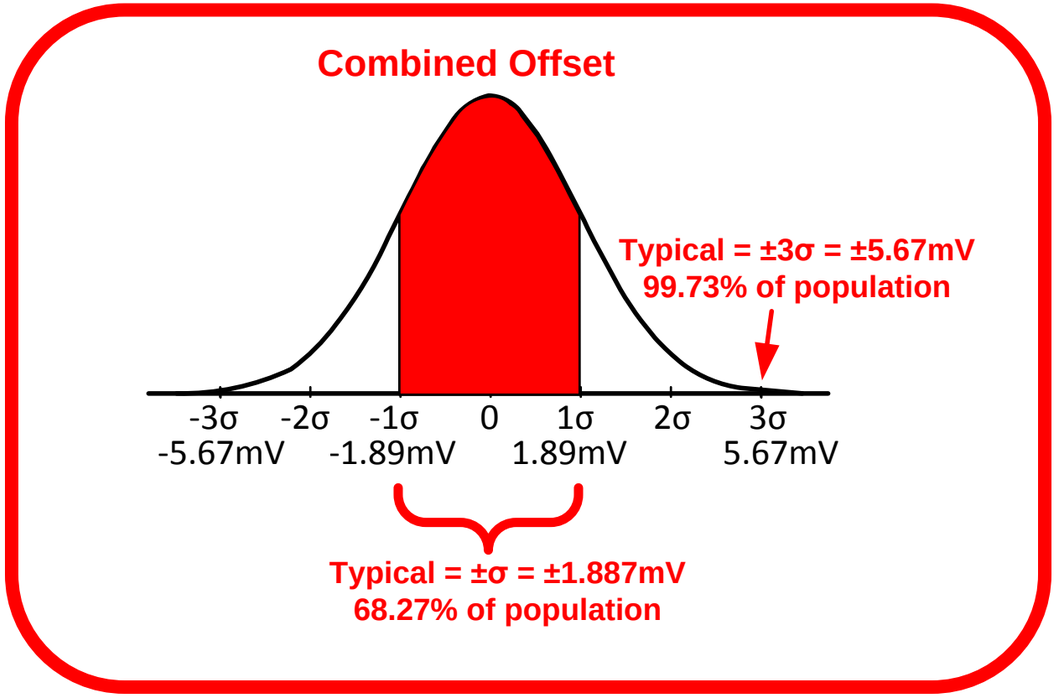

Typical offset at ADC Input
$V_{osT} = \sqrt{(20 \cdot V_{osINA})^2 + (V_{osOPA})^2 + (V_{osADS})^2}$
$V_{osT} = \sqrt{(20 \cdot 80\mu V)^2 + (40\mu V)^2 + (1mV)^2}$
$V_{osT} = 1.887mV$

Gain Error Calculation

Device	PARAMETER		MIN	TYP	MAX	UNITS
R1	E_R	Tolerance	-0.1		+0.1	%
LMP8481	E_G	Gain Error	-0.6		+0.6	%
ADS8860	E_G	Gain Error	-0.01	±0.005	+0.01	%

Absolute Worse Case Gain Error
$V_{osT} = E_{R1} + E_{GU1} + E_{GU3}$
$V_{osT} = 0.1\% + 0.6\% + 0.01\% = .71\%$
Statistical Worse Case Gain Error
$V_{osT} = \sqrt{(E_{R1})^2 + (E_{GU1})^2 + (E_{GU3})^2}$
$V_{osT} = \sqrt{(0.1\%)^2 + (0.6\%)^2 + (0.01\%)^2} = 0.608\%$

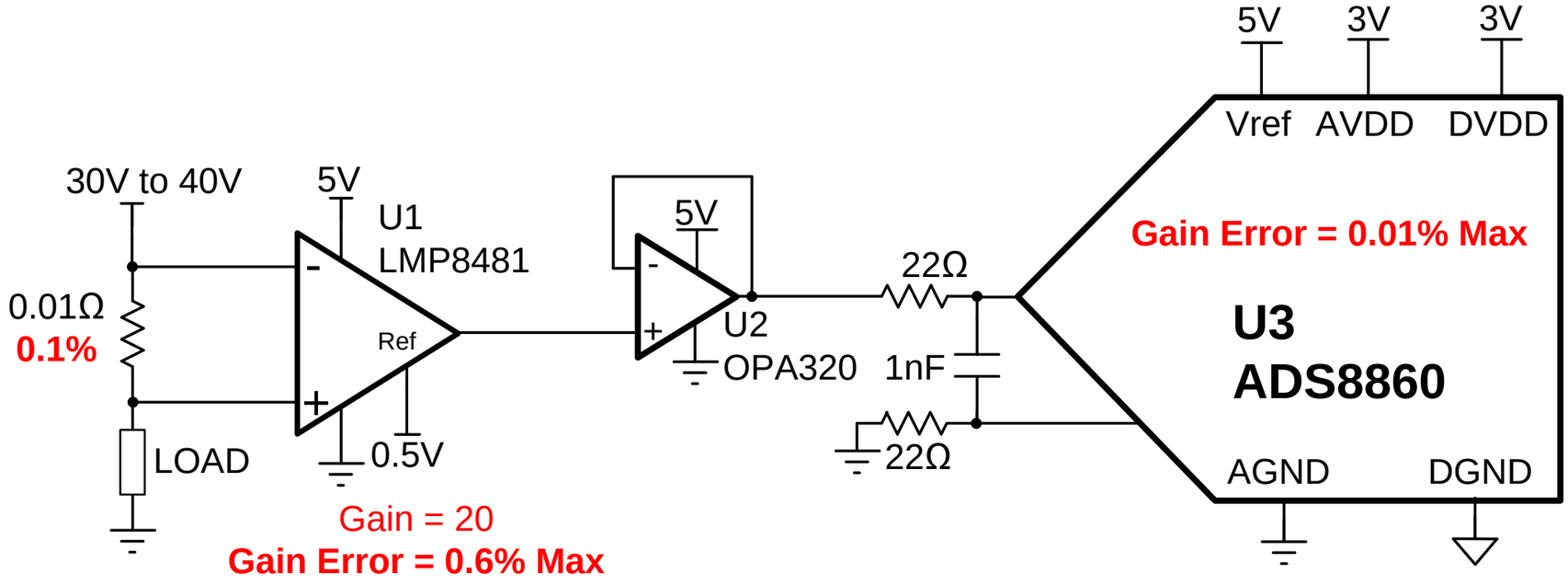

Offset and Gain Calibration: two test signals

Two Precision inputs applied

Make sure amplifiers are in linear range

Average code read

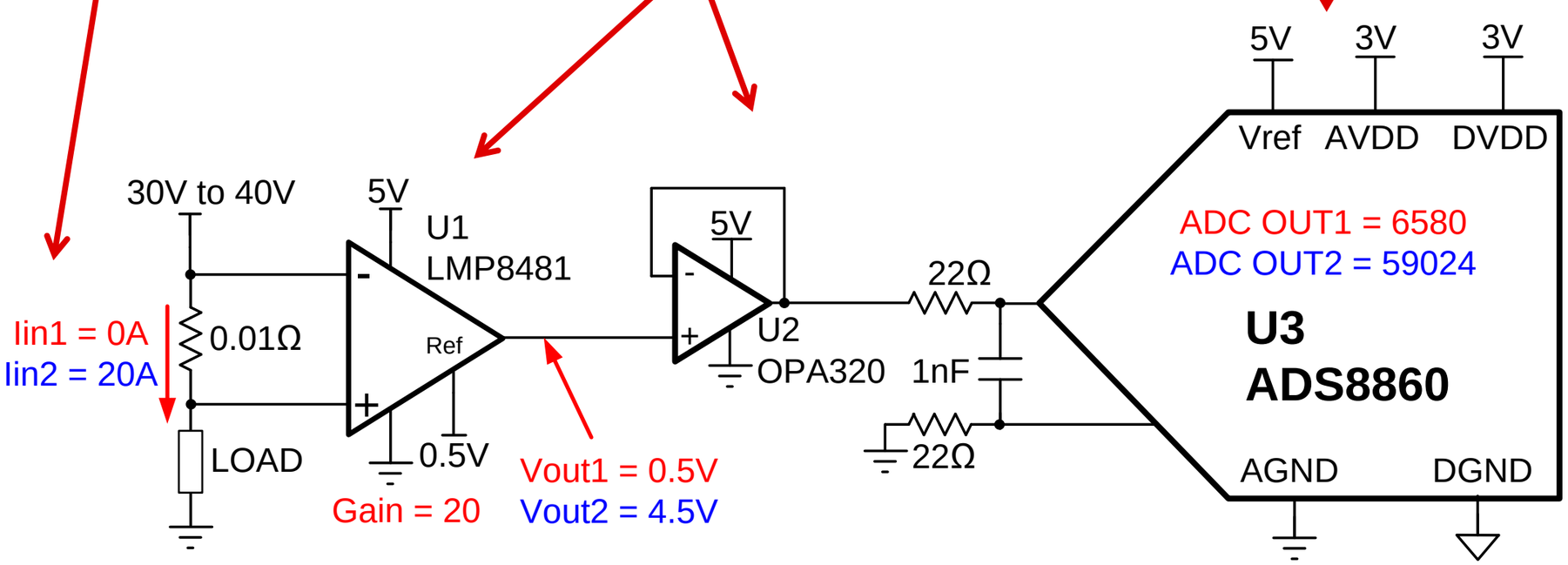

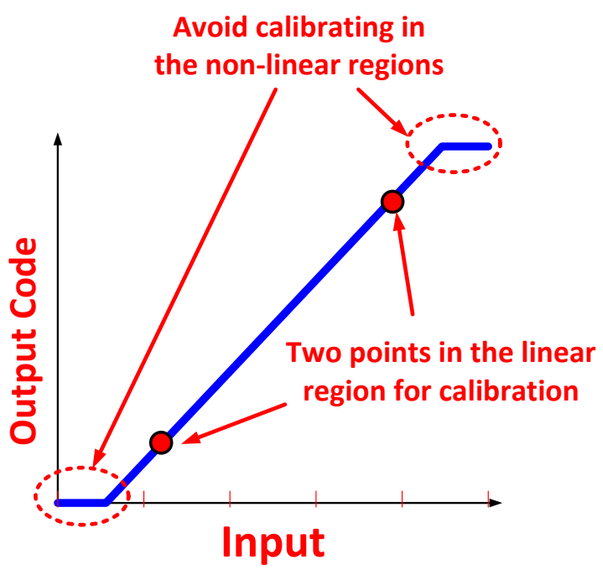

Calibration Example

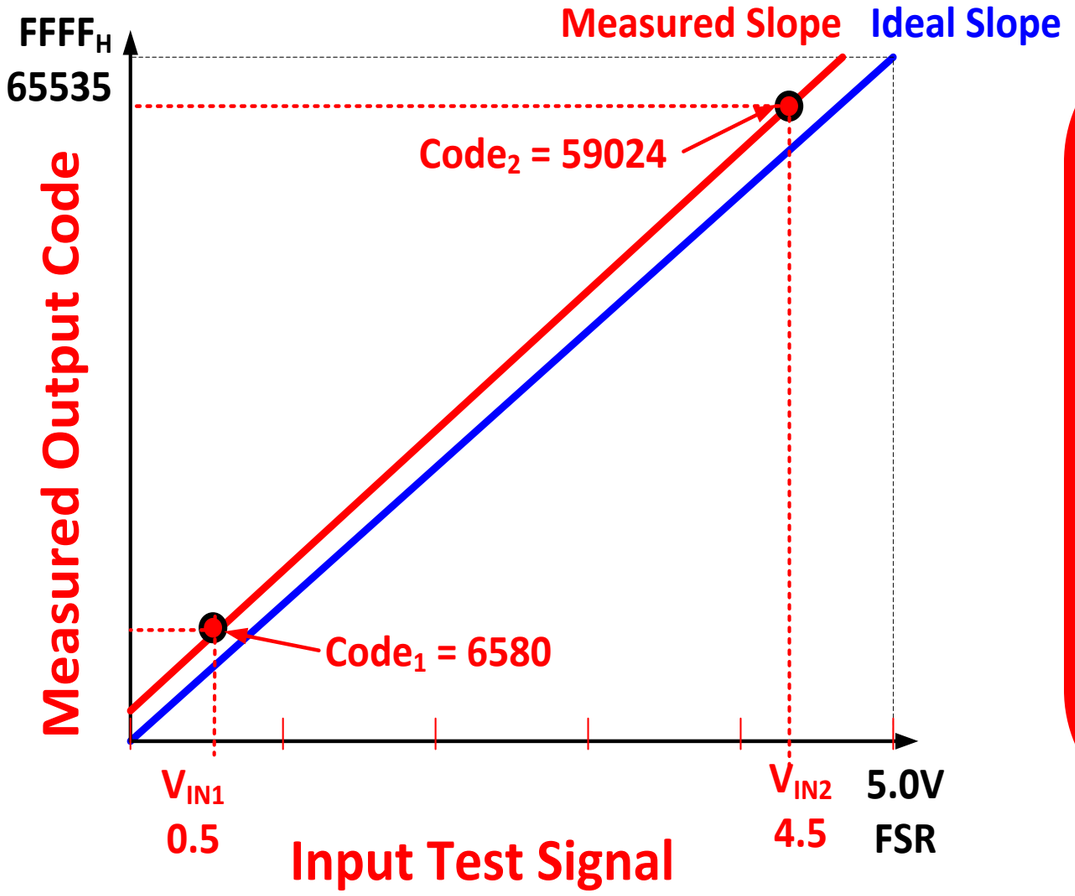

Example calculation for Offset and Gain Error:

$V_{IN1} = 0.5V$	Apply 0A
$V_{IN2} = 4.5V$	Apply 20A
$m_m = \frac{Code_2 - Code_1}{V_{IN2} - V_{IN1}} = \frac{59024 - (6580)}{4.5 - 0.5} = 13111$	Compute Slope based on codes
$b_m = Code_1 - m_m \cdot V_{IN1} = 6580 - 13111 \cdot 0.5 = 24.5$	Offset
$V_{IN_applied} = 2.0V$	Example Input
$Code = 26246$	Output code
$V_{IN_uncal} = Code \cdot LSB = 26246 \cdot 76.029\mu V = 2.002V$	Uncalibrated 2mV error
$V_{IN} = \frac{Code - b_m}{m_m} = \frac{26246 - (24.5)}{13111} = 2.0000V$	Calibration eliminates error

Error Sources that are difficult to Calibrate

- Temperature Drift
- Non-linearity
- Long term shift (Aging)
- Hysteresis
- Noise

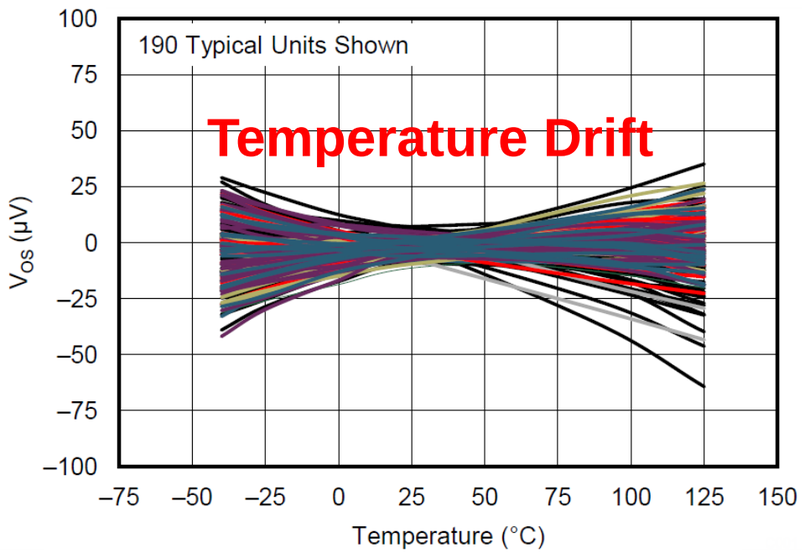

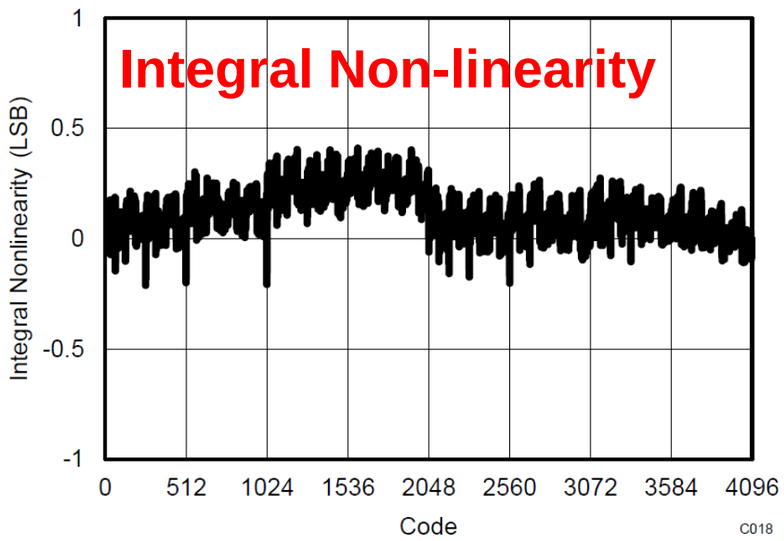

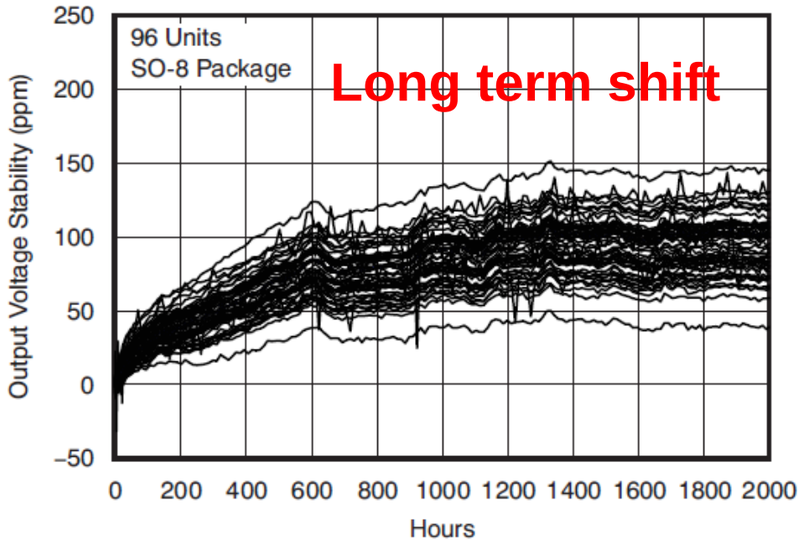

SNR of Amplifier + ADC: General Equations

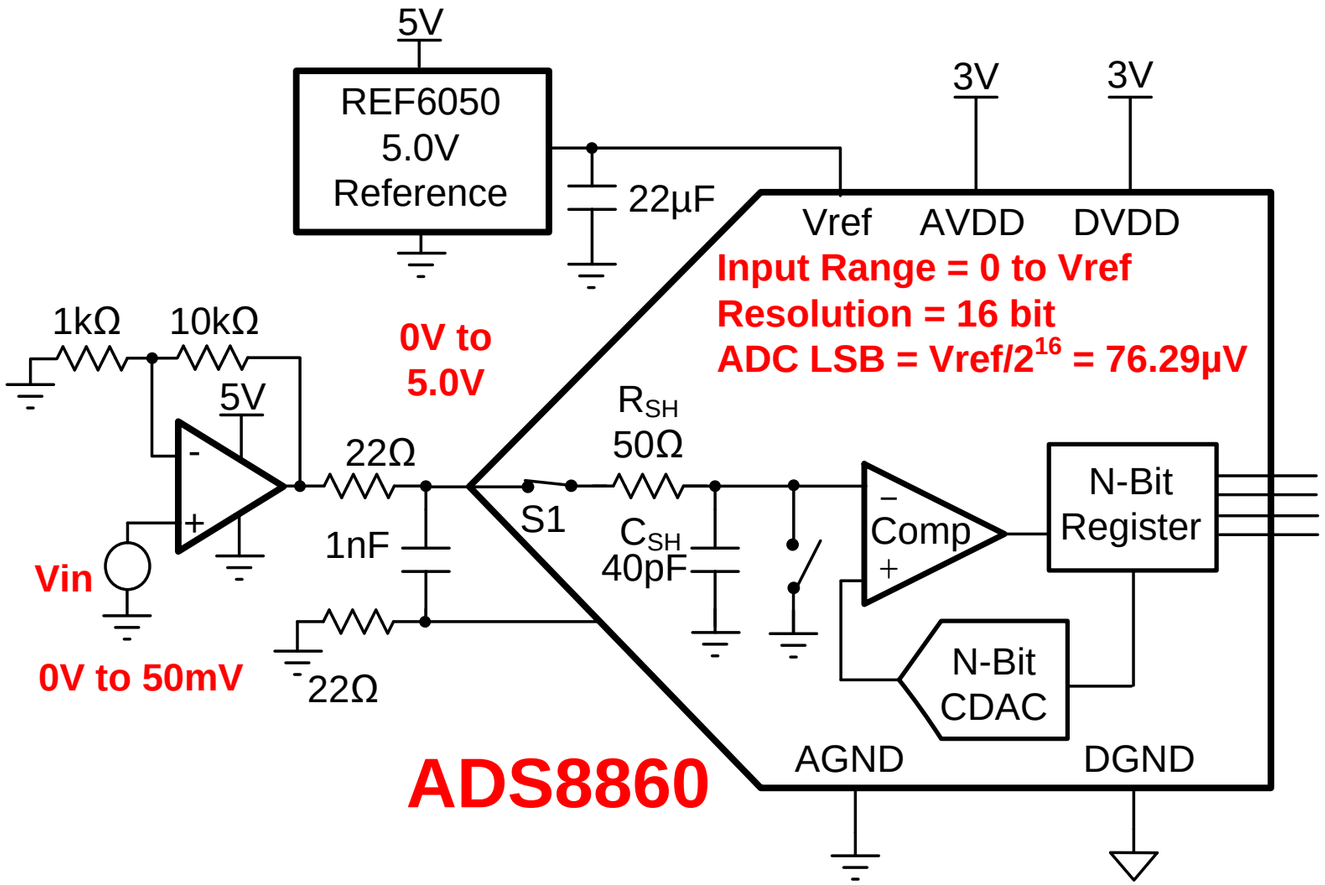

$$SNR_{ADC} = 20 \cdot \log\left(\frac{V_{FSR_rms}}{V_{nADC}}\right)$$ Solve for noise

$$V_{nADC} = \frac{V_{FSR_rms}}{10^{\left(\frac{SNR_{ADC}}{20}\right)}}$$ From ADC data sheet

$$V_{nT} = \sqrt{(V_{nADC})^2 + (V_{nAmp})^2 + (V_{nRef})^2}$$ Total RMS Noise

$$SNR_{total} = 20 \cdot \log\left(\frac{V_{FSR_rms}}{V_{nT}}\right)$$ ADC+Amp+Ref

Find the REF6050 Noise

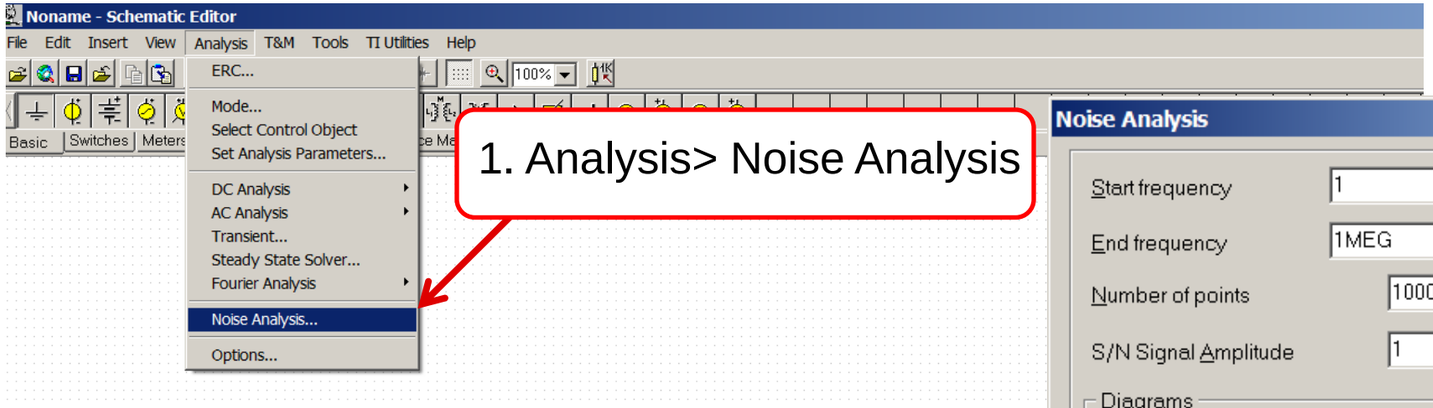

1. Analysis> Noise Analysis

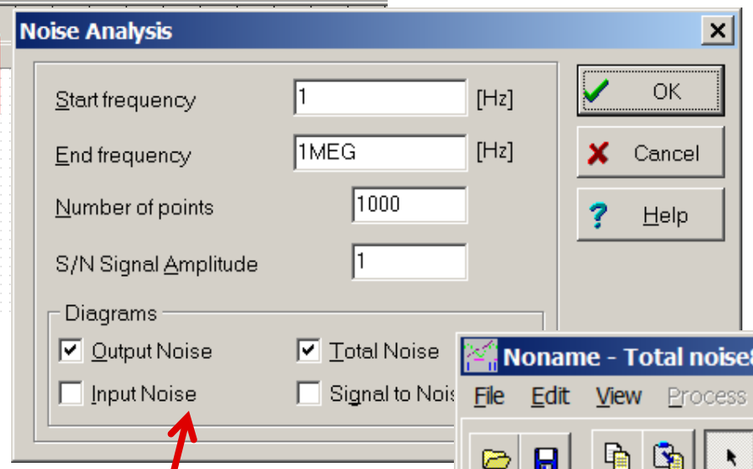

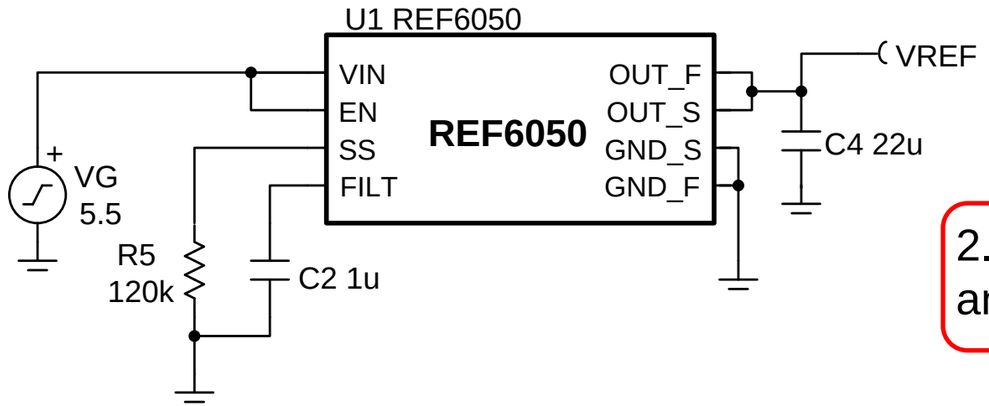

2. Enter the bandwidth and select the diagrams

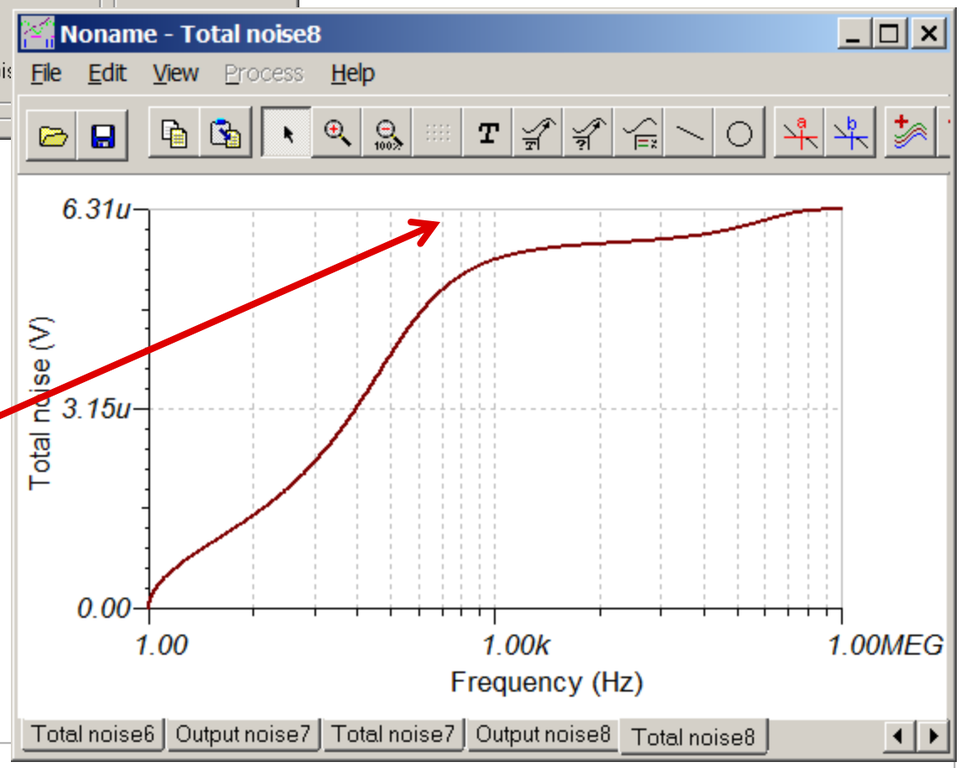

3. The integrated noise is the “total noise”. Look at the final value VnRef ≈ 6.31uV rms

Simulating Amplifier Noise

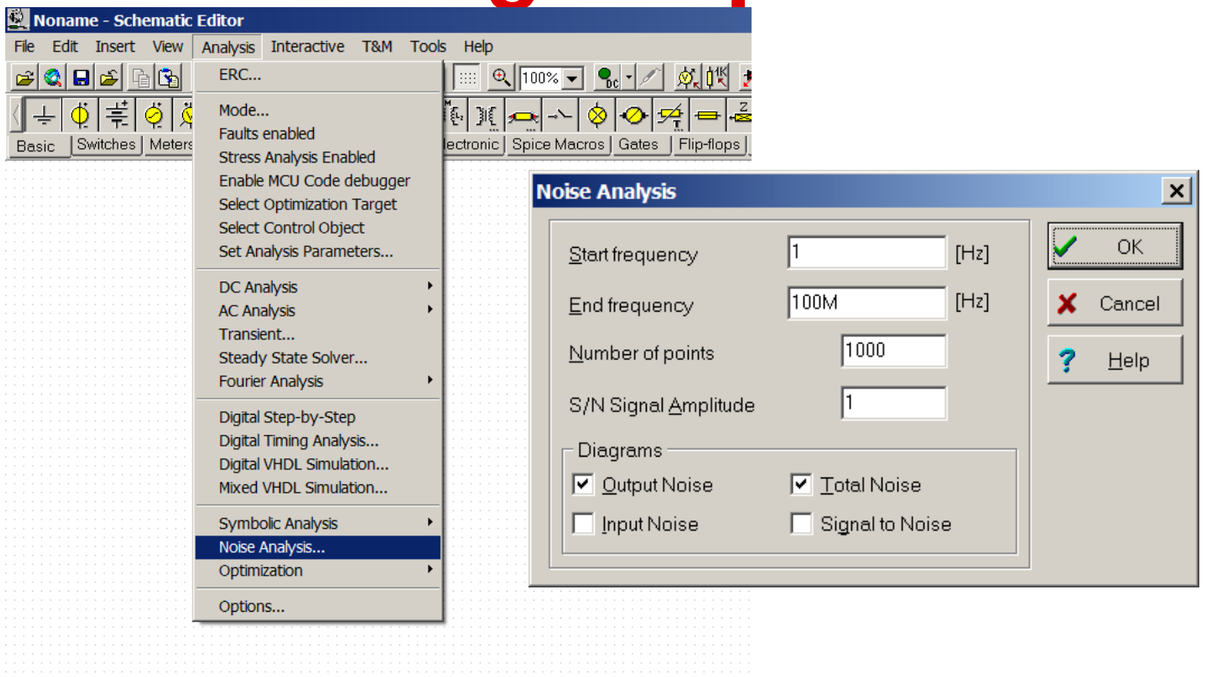

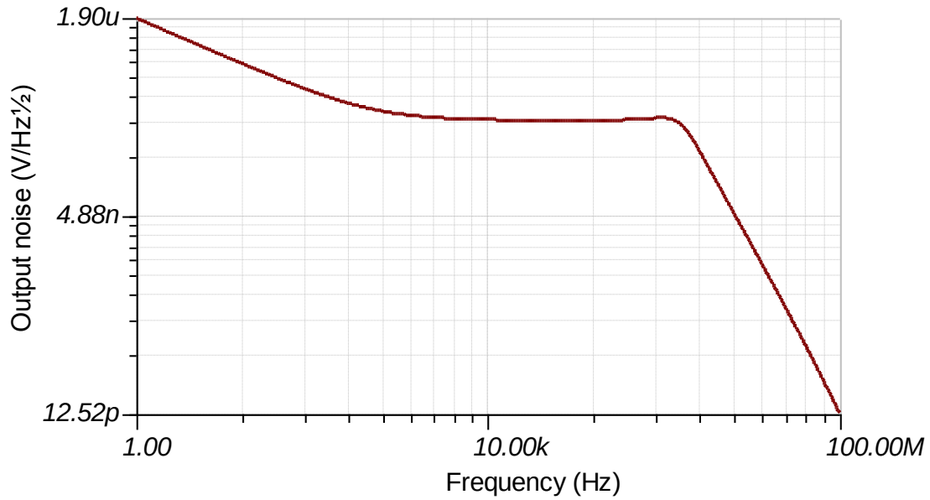

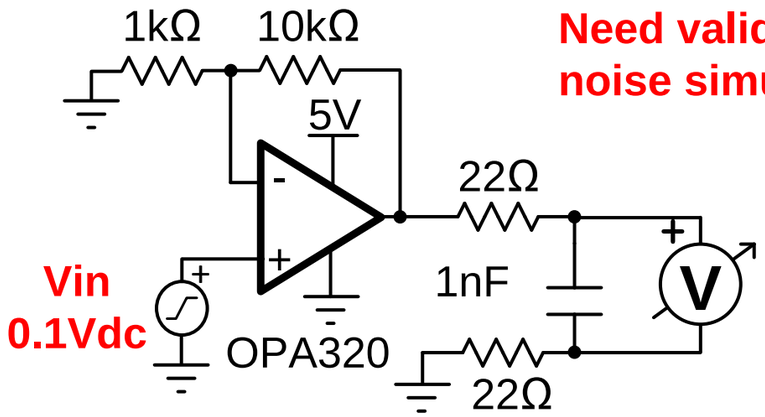

Need valid dc operating point for noise simulation!

V_{outDC} = 11 x 0.1V = 1.1V
E_{nrms} = 128.8µV rms
E_{npp} = 6·128.8µV rms = 773µVpp

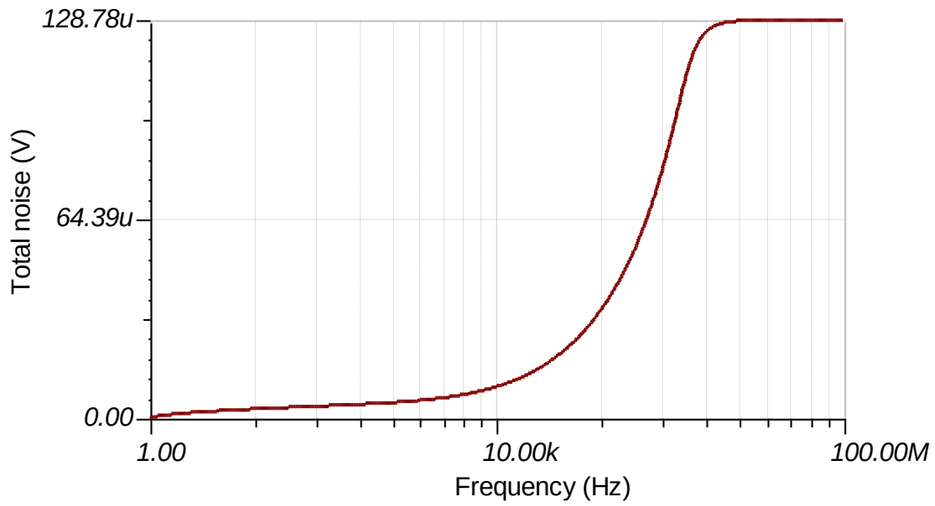

SNR of Amplifier + ADC: Example Calculation

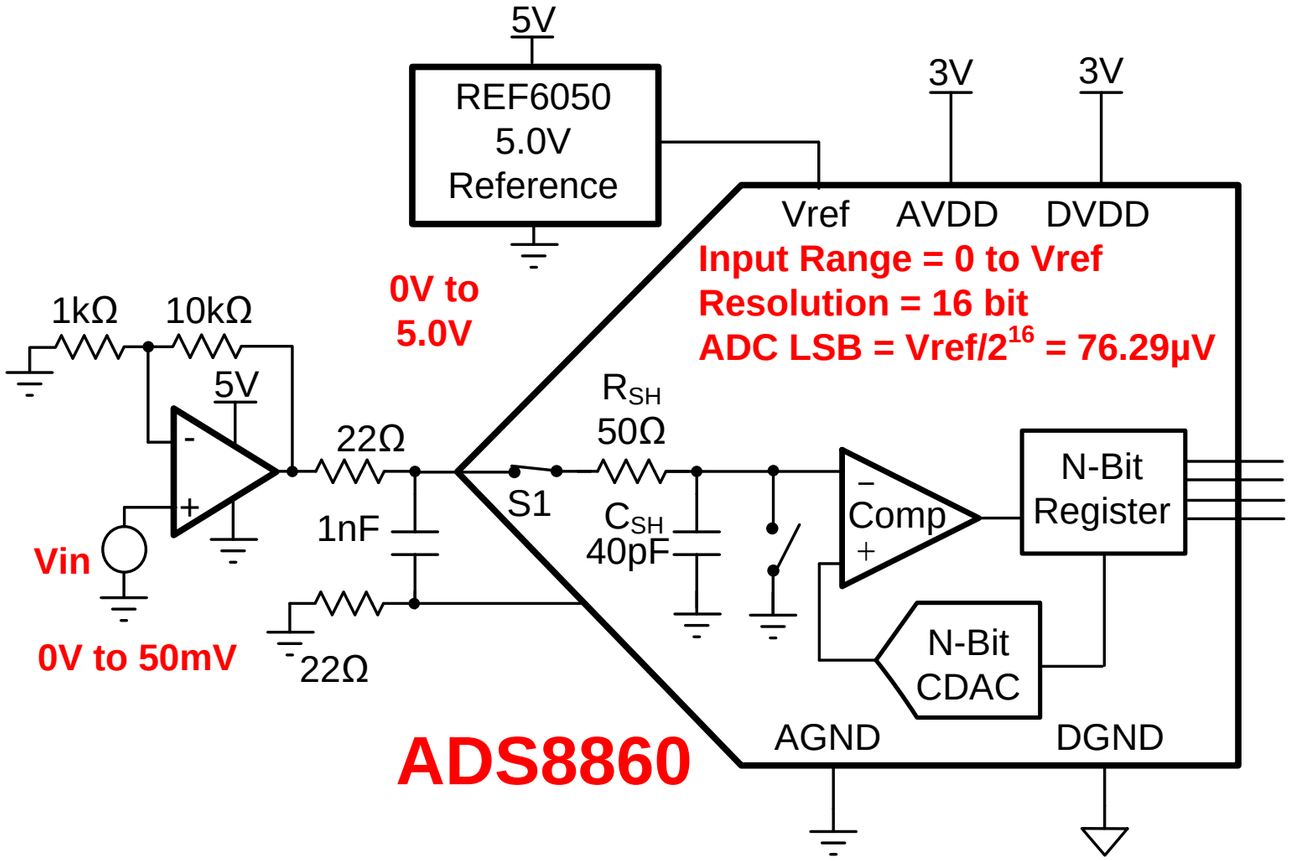

$$V_{FSR_rms} = V_{FSRpk} \cdot 0.707$$
$$V_{FSR_rms} = 0.5 \cdot FSR \cdot 0.707$$
$$= 0.5 \cdot 5V \cdot 0.707 = 1.767V$$

$$V_{nADC} = \frac{V_{FSR_rms}}{10^{\left(\frac{SNR_{ADC}}{20}\right)}} = \frac{1.767V}{10^{\left(\frac{93dB}{20}\right)}} = 39.6\mu V\ rms$$

$$V_{nT} = \sqrt{(V_{nADC})^2 + \left(V_{nAmp}\right)^2 + (V_{nRef})^2}$$
$$= \sqrt{(36.9\mu V)^2 + (128.8\mu V)^2 + (6.3\mu V)^2} = 134\mu V\ rms$$

$$SNR_{total} = 20 \cdot \log\left(\frac{V_{FSR_{rms}}}{V_{nT}}\right) = 20 \cdot \log\left(\frac{1.767V}{134\mu V}\right) = 82.4\ dB$$

Signal Chain Noise: Analog Engineer's Calculator

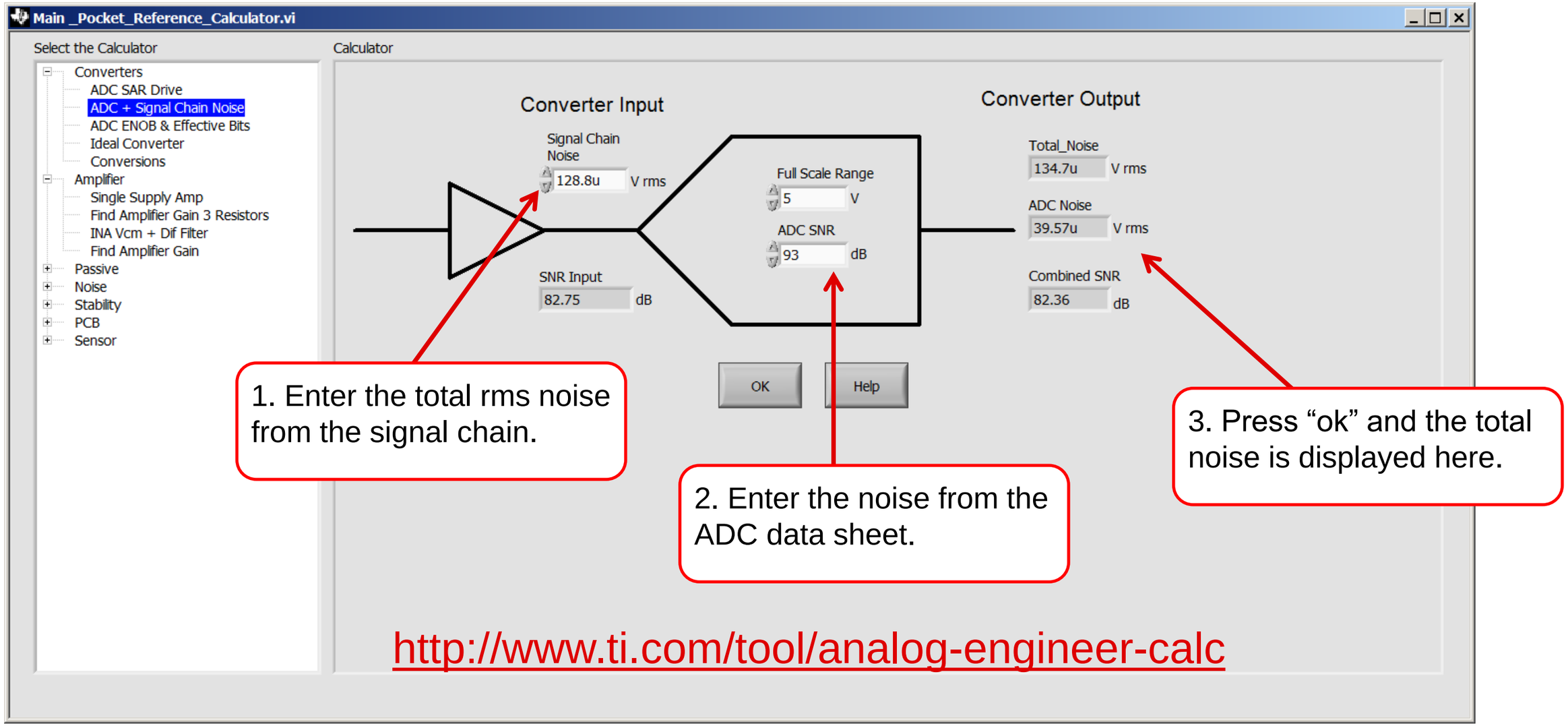

SNR of Amplifier + ADC: Measured Result

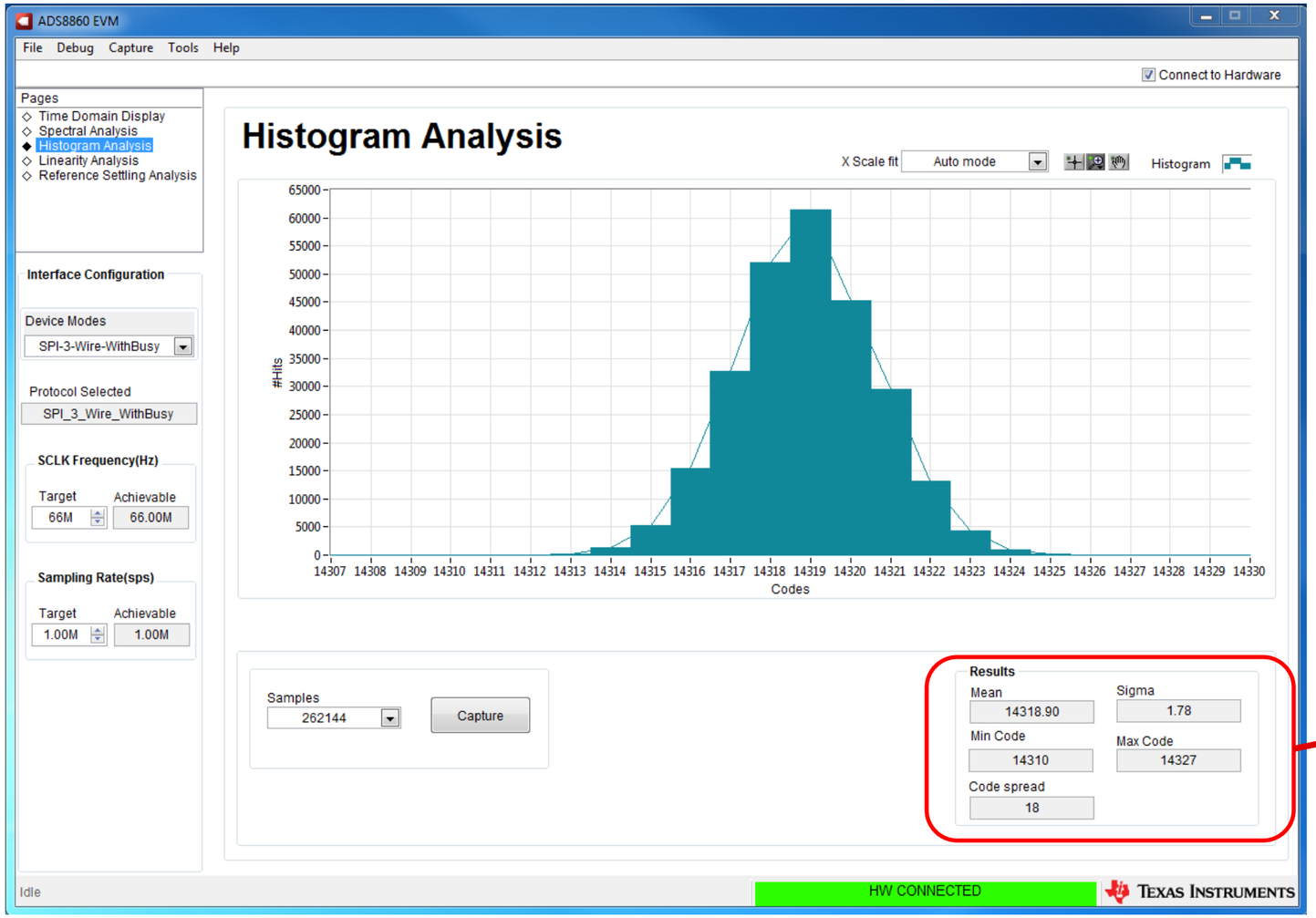

$$LSB = \frac{FSR}{2^N} = \frac{5V}{2^{16}} = 76.29\mu V$$

$$V_{nTmeas} = \sigma_{adc} \cdot LSB = 1.78 \cdot 76.29\mu V = 136\mu V\ rms$$

$V_{nTCalc} = 134\mu V\ rms$ *from the previous slide*

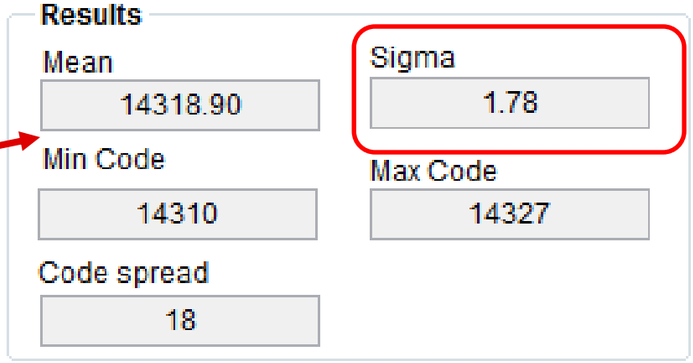

rms noise is one sigma

Averaging to Reduce Noise

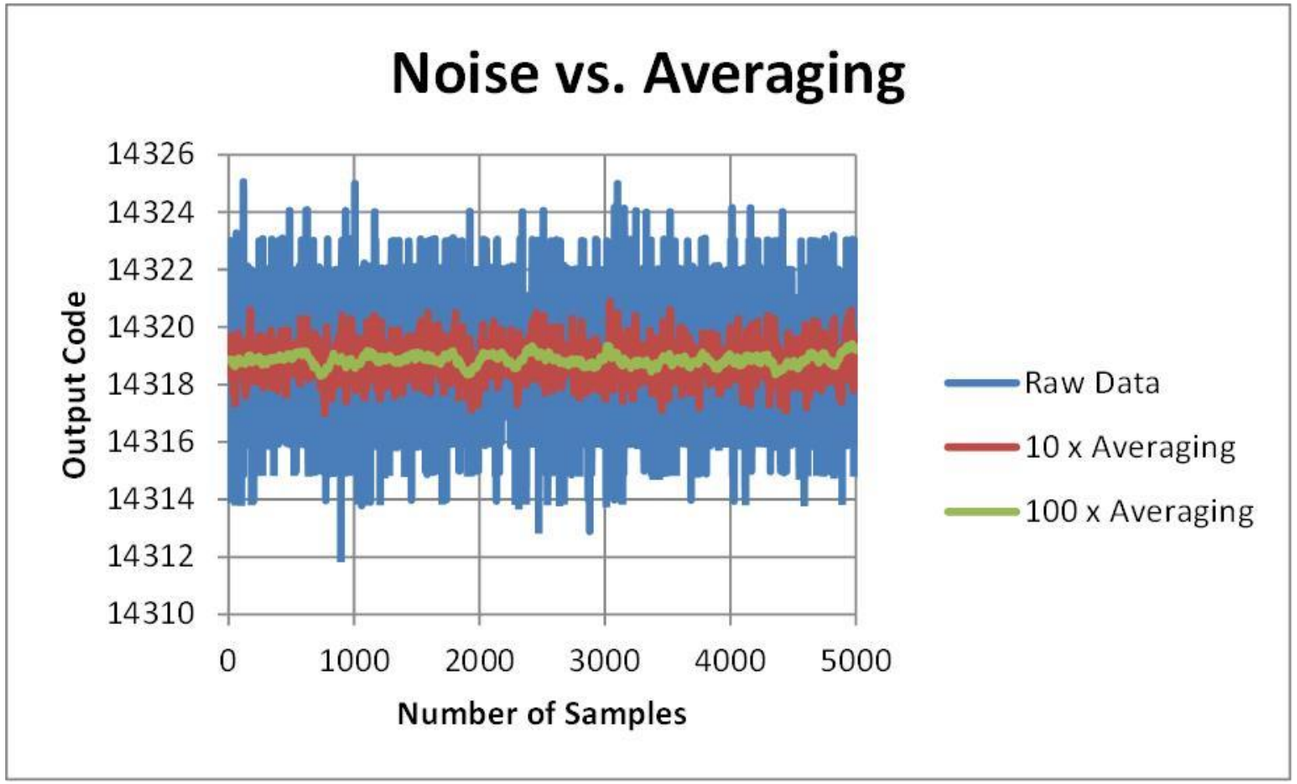

Measured vs. Calculated Averaging

	Measured RMS codes	Calculated RMS codes
Standard Deviation Raw Data	1.80	na
Standard Deviation 10 x Averaging	0.59	0.57
Standard Deviation 100 x Averaging	0.18	0.18

$$\mathrm{V_{nAvg}} = \frac{V_n}{\sqrt{N}}$$

Where
V_n *is the RMS noise*
N *is the number of averages*
V_{nAvg} *is the RMS noise after averaging*

$$\mathrm{V_{nAvg}} = \frac{V_n}{\sqrt{N}} = \frac{1.8\ codes}{\sqrt{10}} = 0.57\ codes$$

$$SNR_{avg} = 20 \cdot \log\left(\frac{\mathrm{V}_s}{V_n/\sqrt{N}}\right) = 20 \cdot \log\left(\frac{\mathrm{V}_s}{V_n}\right) + 10 \cdot \log(N)$$

Agenda

1. **ADC Input types**
   a) Single ended, pseudo-differential, fully-differential, and true-differential
   b) Switched capacitor vs. buffered
2. **Linear operation of amplifier and ADC**
   a) Rail-to-Rail amplifiers and crossover distortion
   b) Inverting configuration
3. **Common Front Ends**
   a) Instrumentation amplifier: Selecting gain and common mode range
   b) Fully Differential Amplifiers: Single Ended to Differential
4. **Error Sources:**
   a) Statistics: Worst Case vs. Typical
   b) Offset and Gain Error
   c) Calibration
   d) Drift and Non-linearity
   e) Noise
5. **AC Specifications and the FFT**
6. **Aliasing**

Time Domain vs. Frequency Domain

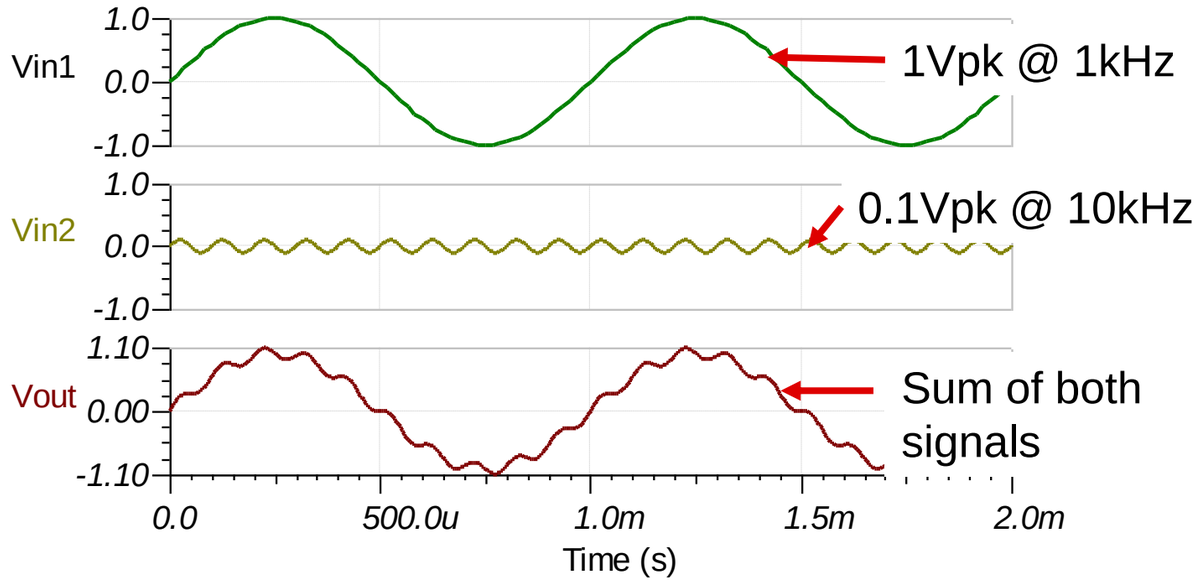

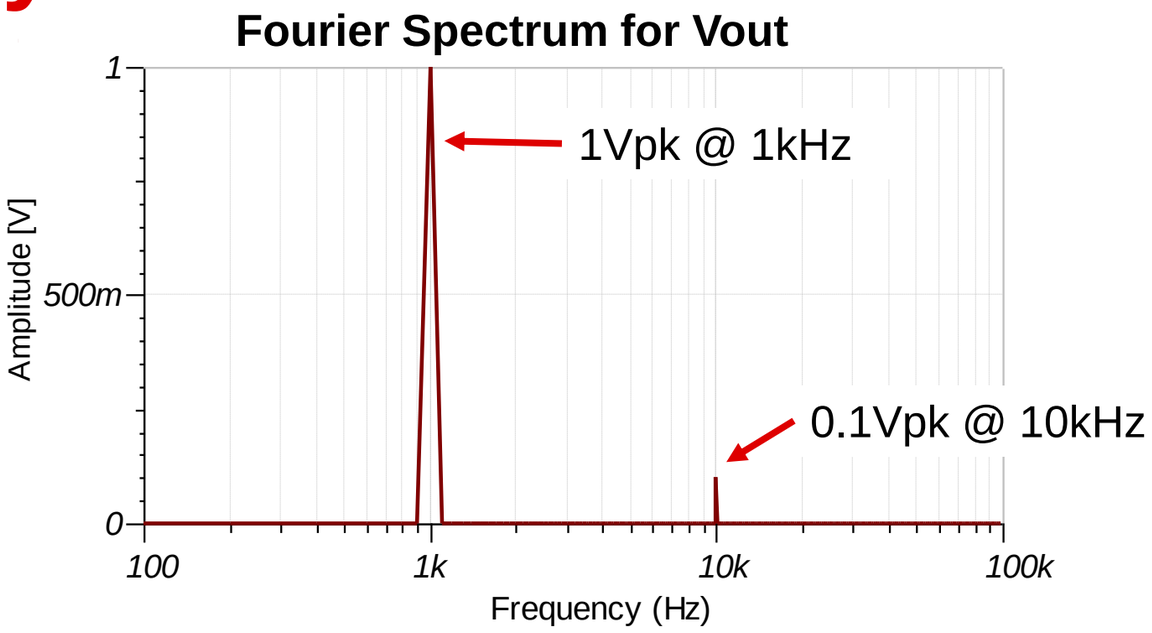

Time Domain

Frequency Domain

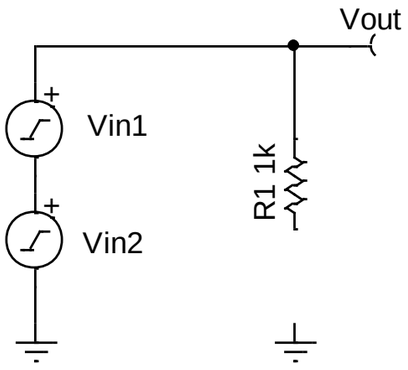

Infinite Series for a Triangle Wave

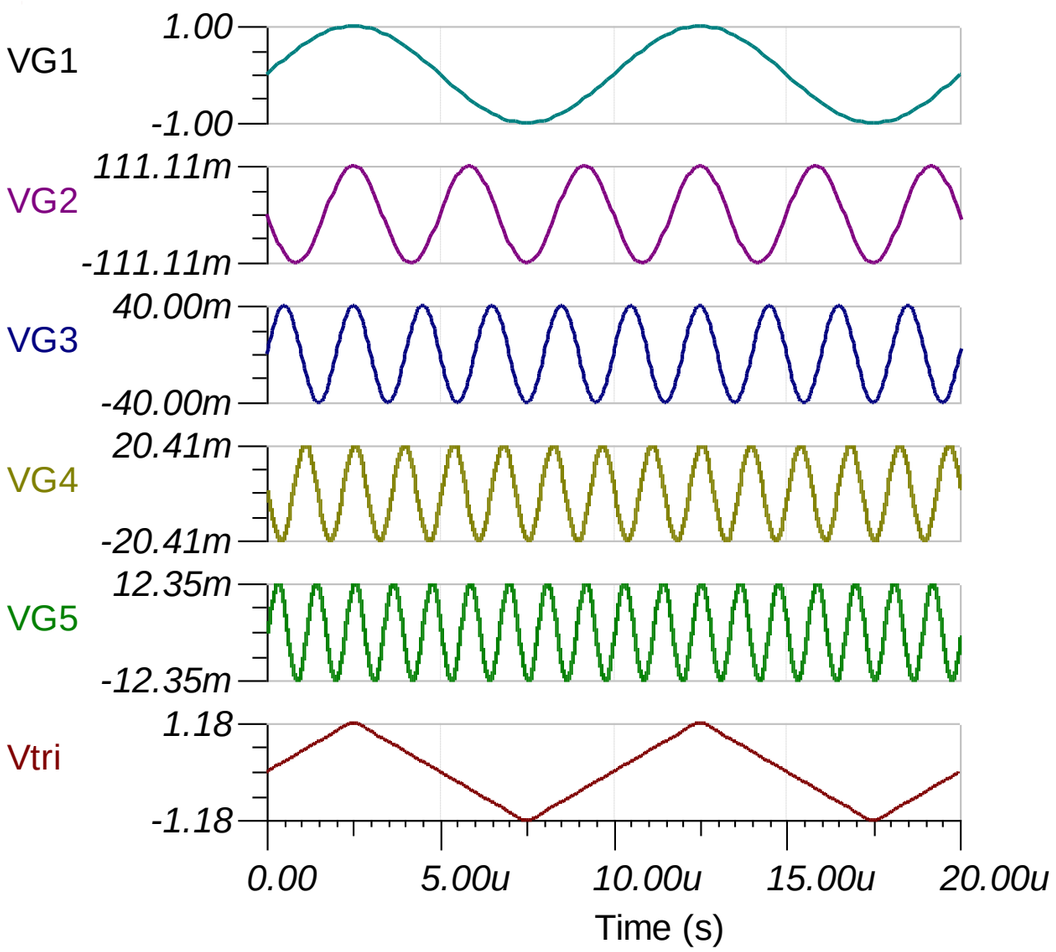

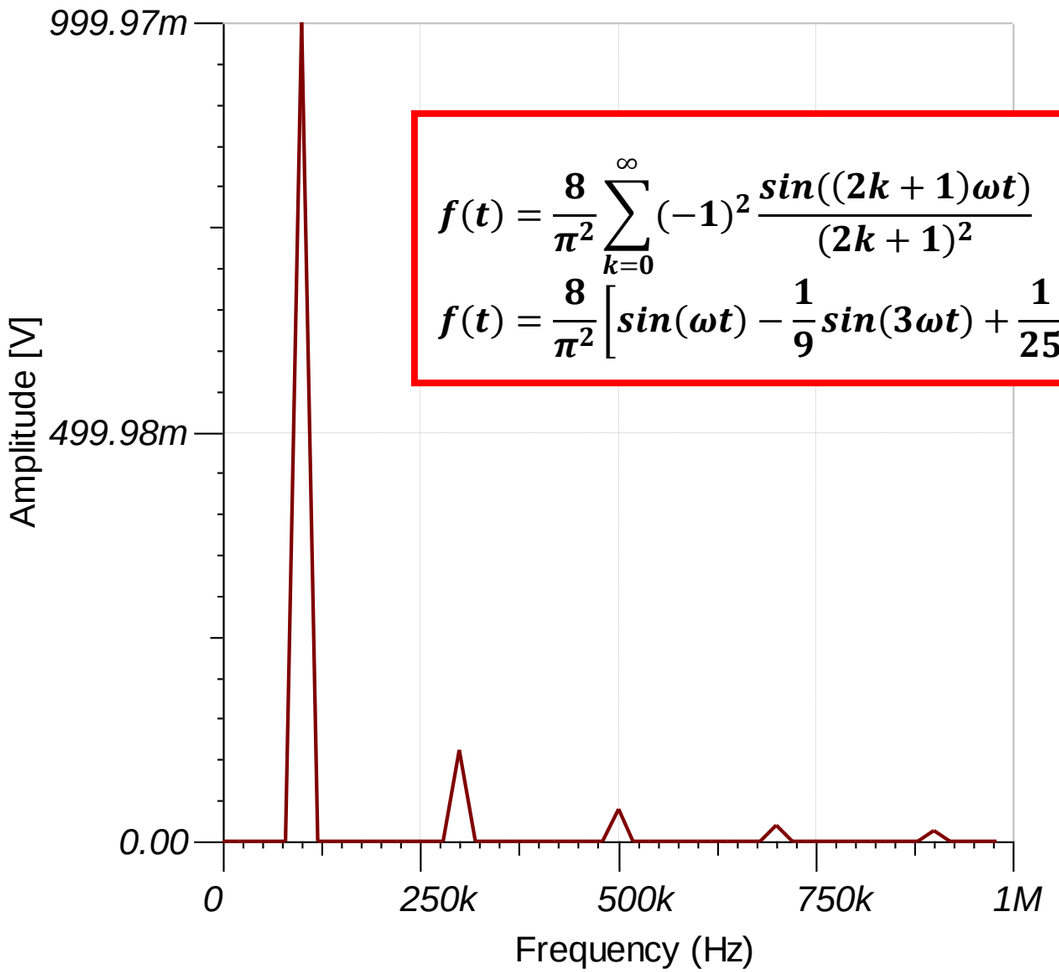

$$f(t) = \frac{8}{\pi^2}\sum_{k=0}^{\infty}(-1)^2\frac{sin((2k+1)\omega t)}{(2k+1)^2}$$

$$f(t) = \frac{8}{\pi^2}\left[sin(\omega t) - \frac{1}{9}sin(3\omega t) + \frac{1}{25}sin(5\omega t) - \cdots\right]$$

Time Domain

Frequency Domain

Dynamic Characteristics

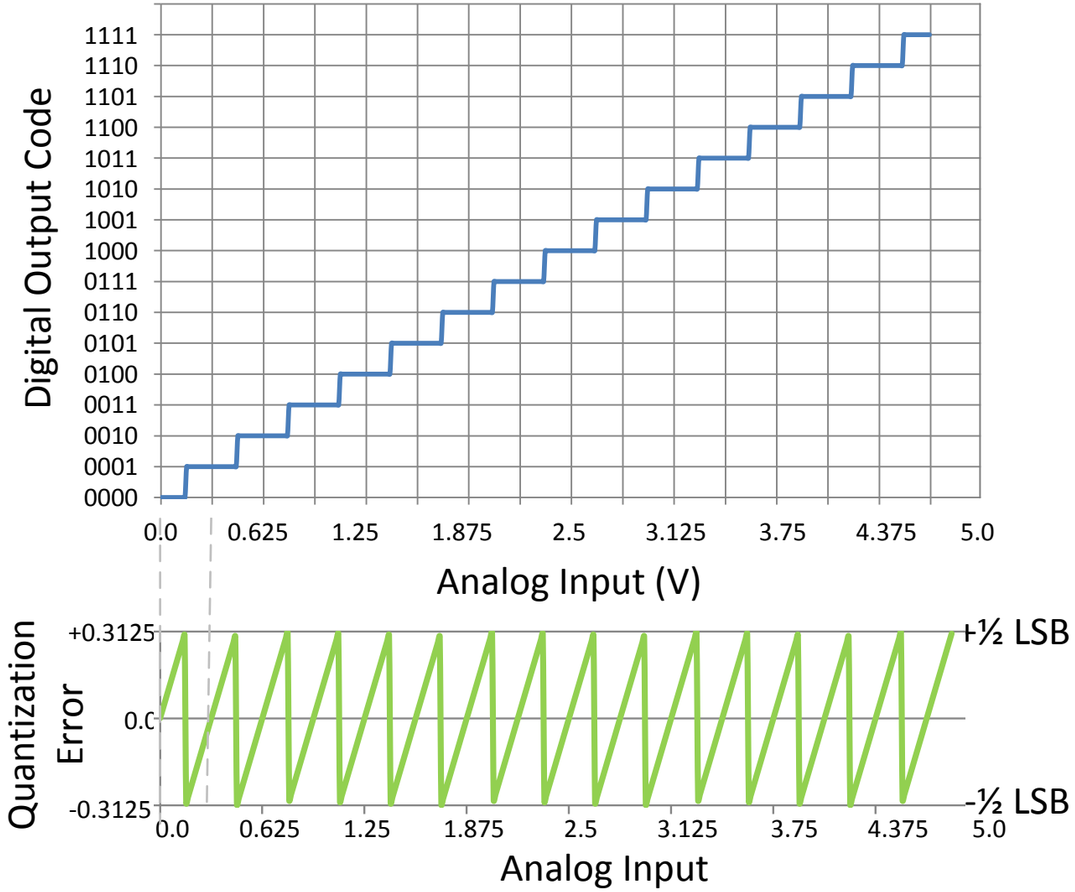

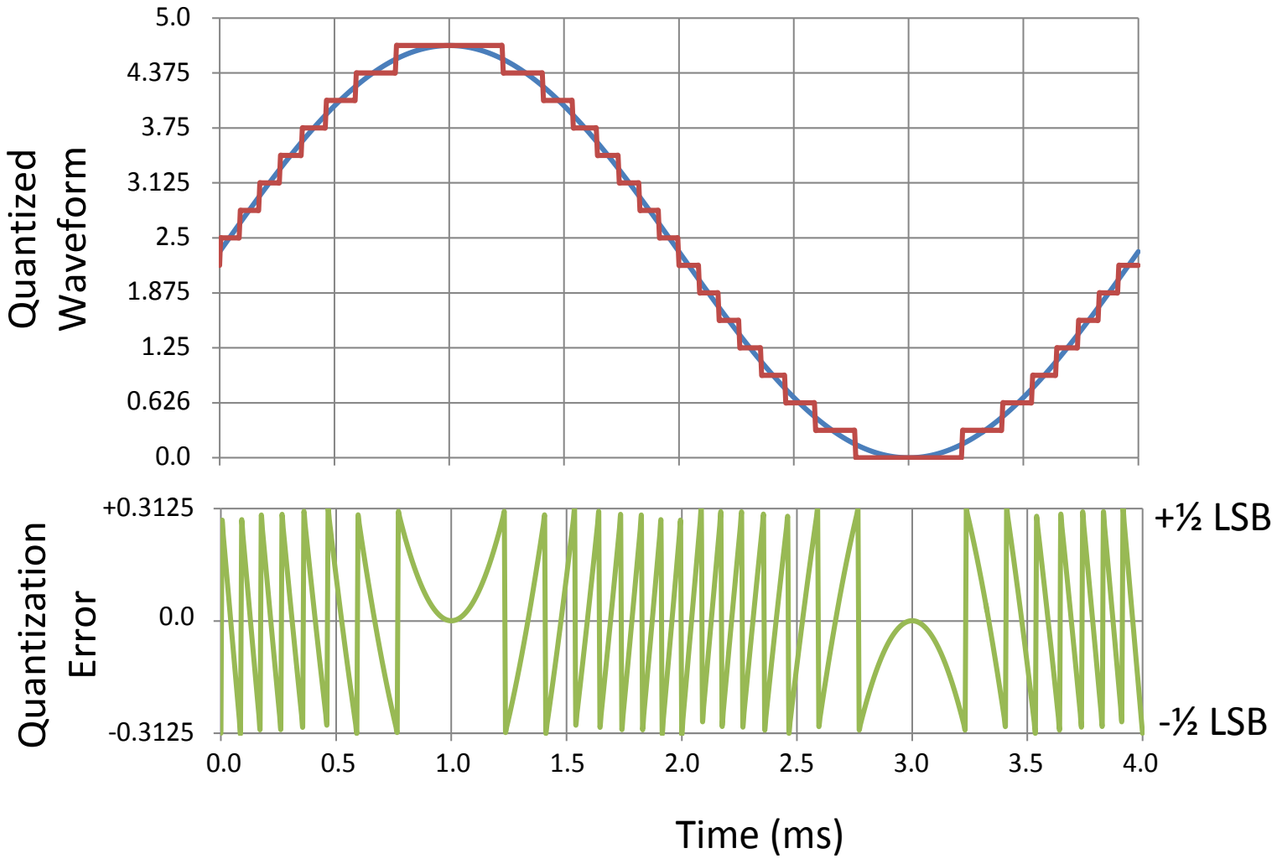

Signal to Noise Ratio (SNR)

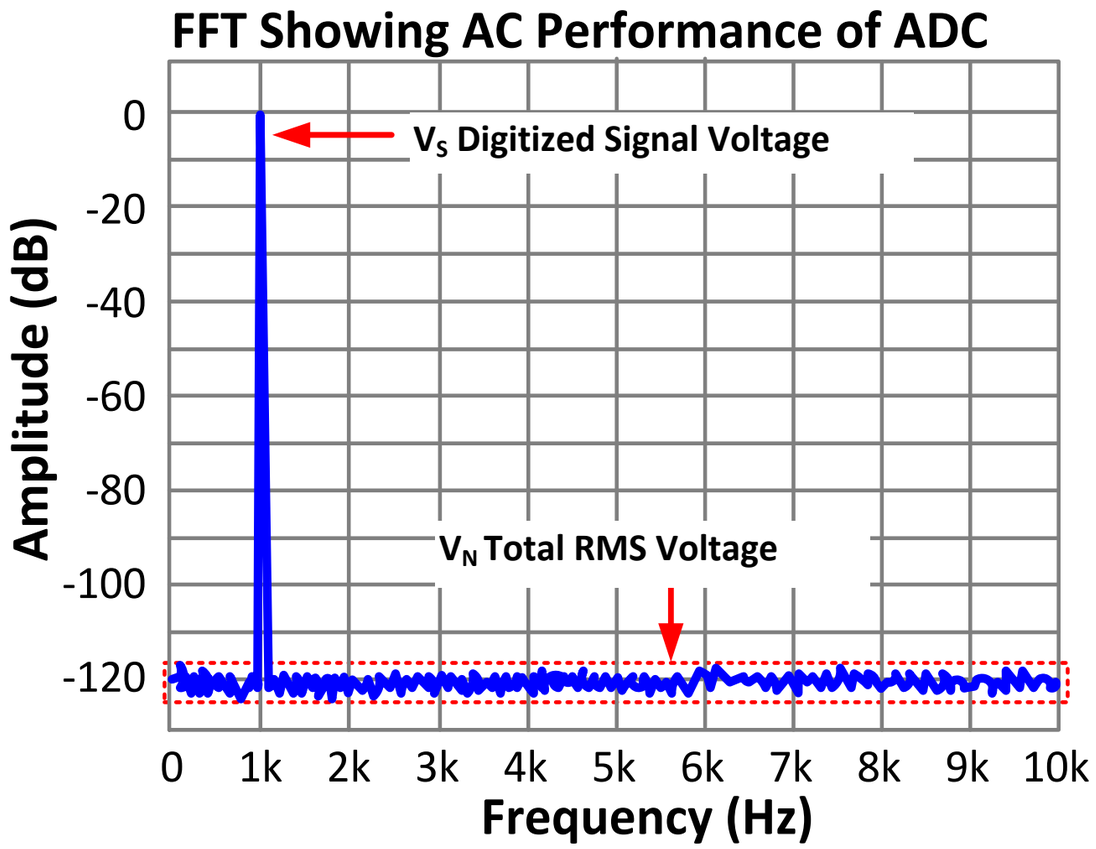

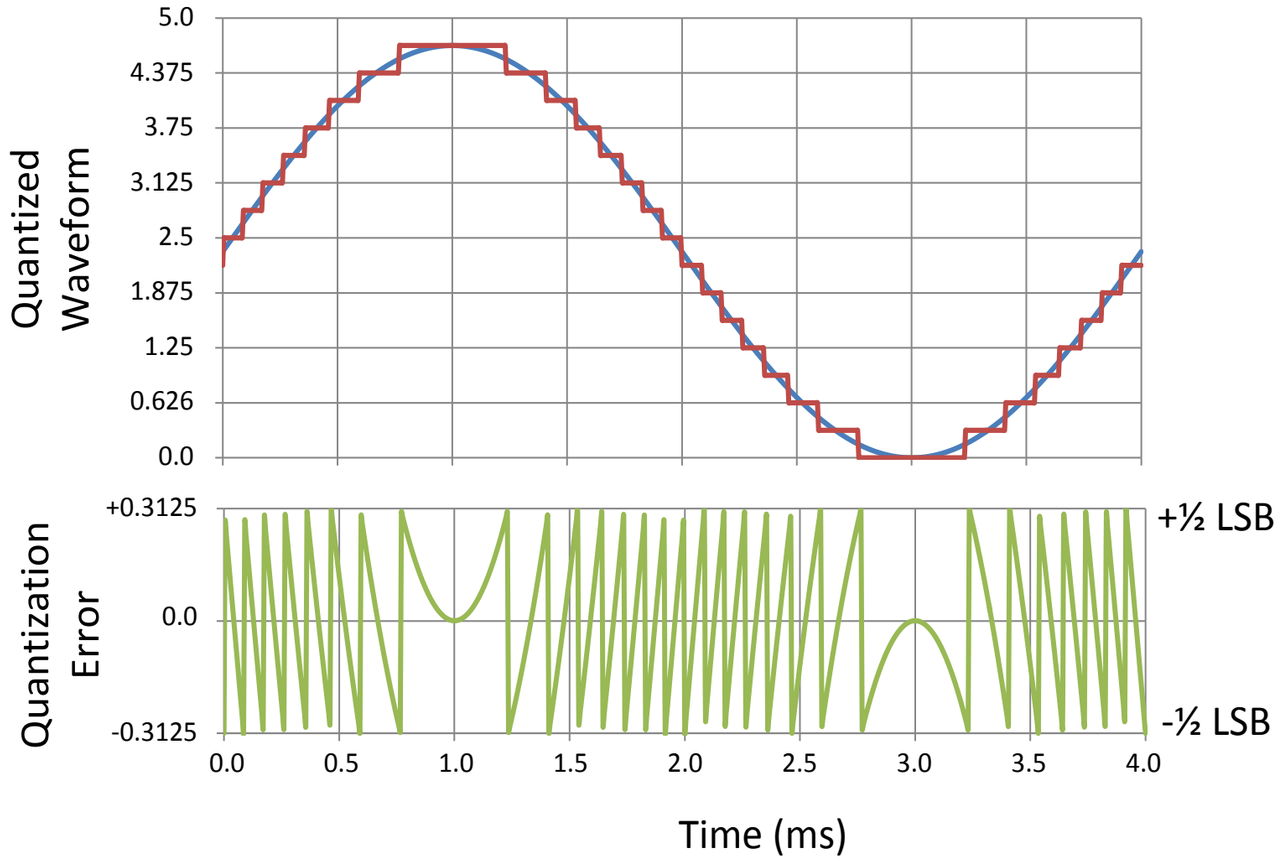

Signal to Noise Ratio (SNR)

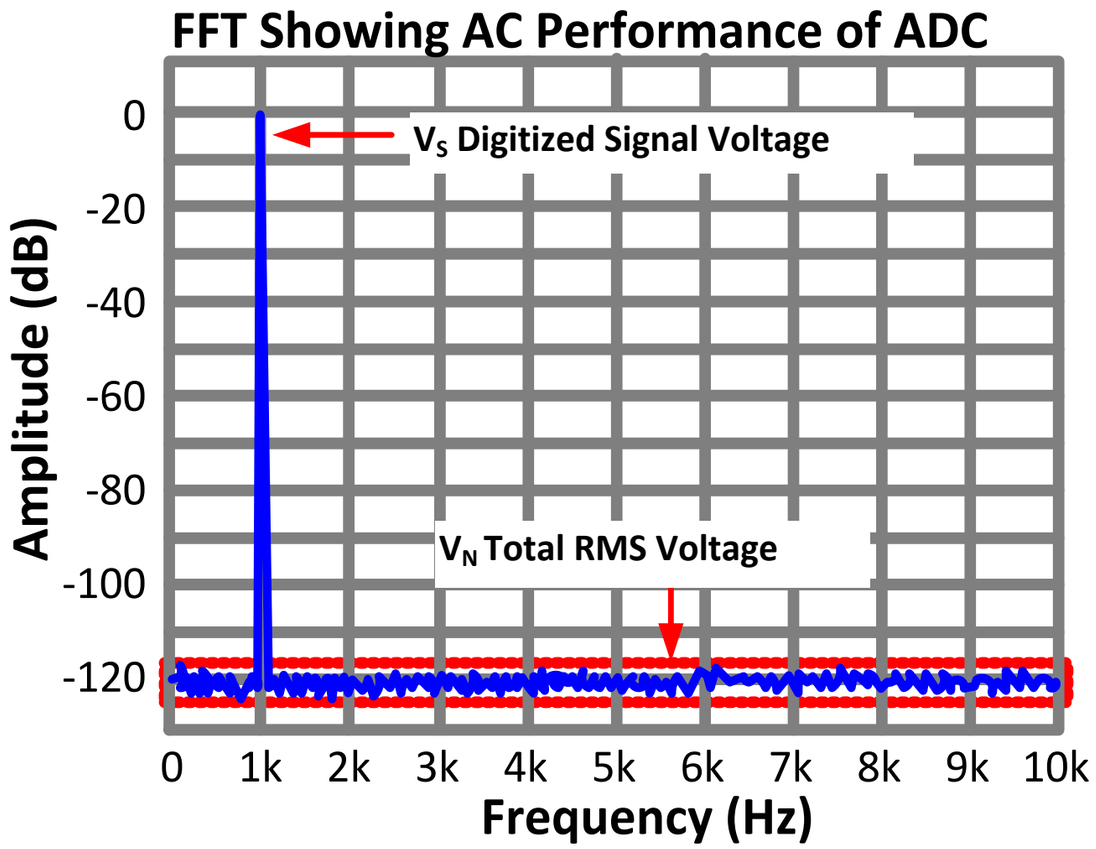

Measured Ratio:

$$SNR(V/V) = \frac{V_S}{V_N}$$

Measured dB:

$$SNR(dB) = 20 \cdot log\left(\frac{V_S}{V_N}\right)$$

Ideal ADC SNR:

$$SNR(dB) = 6.02 \cdot N + 1.76$$

Where N is the number of bits
e.g. N = 10 for a 10 bit converter

Ideal SNR calculation from Resolution

According to the previous equation:

$$SNR = 6.02N + 1.76\ dB$$

ADC Resolution N (bits)	Levels (2^N)	SNR (dB)
8	256	**49.92**
10	1024	**61.96**
12	4096	**74.00**
14	16384	**86.04**
16	65536	**98.08**
18	262144	**110.12**
20	1048576	**122.16**

Nonlinearity

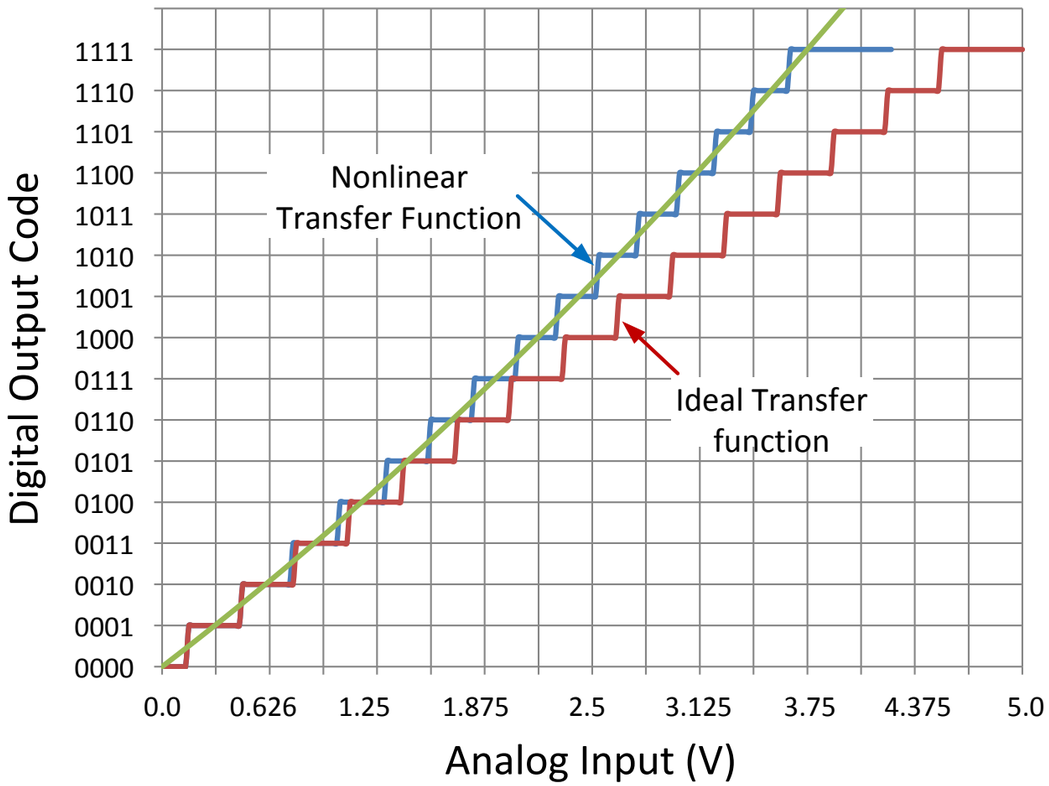

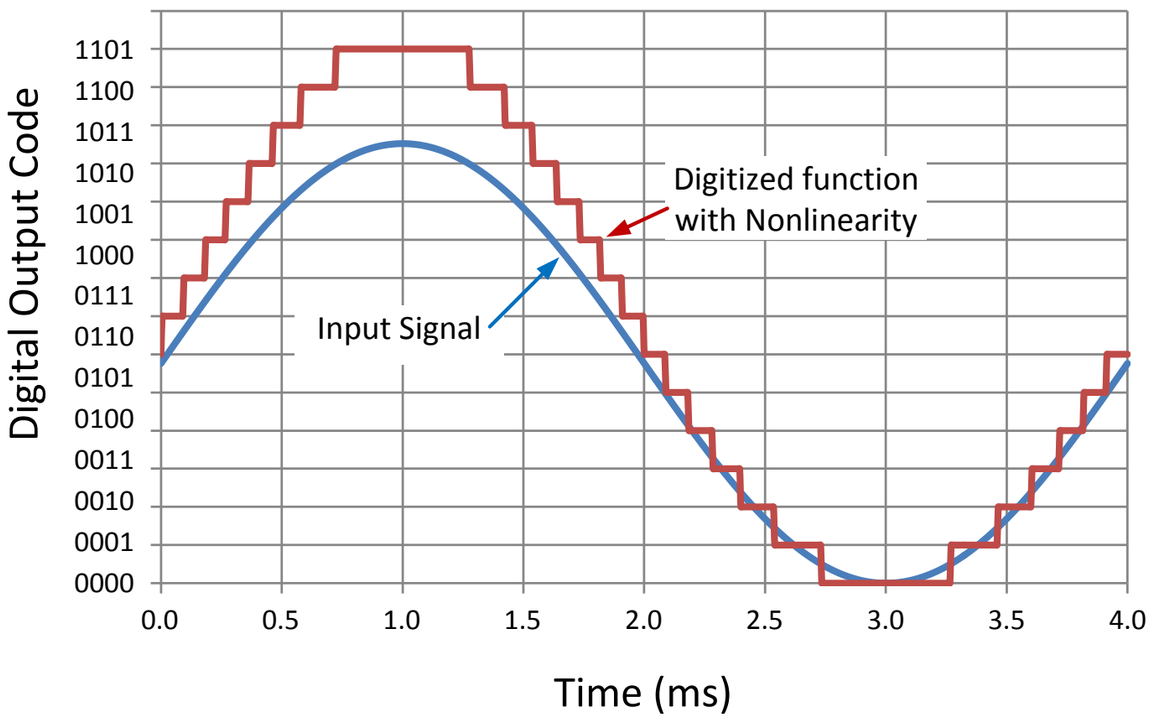

Total Harmonic Distortion (THD), SINAD

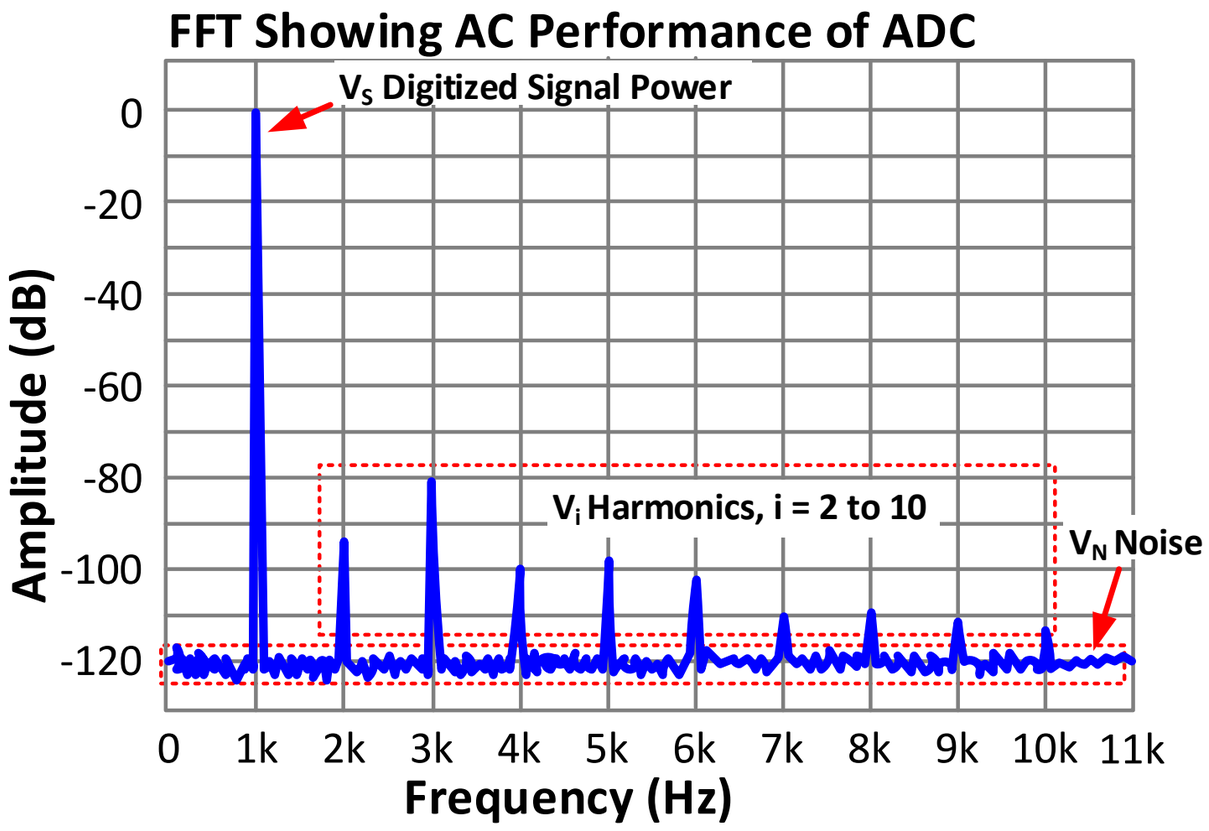

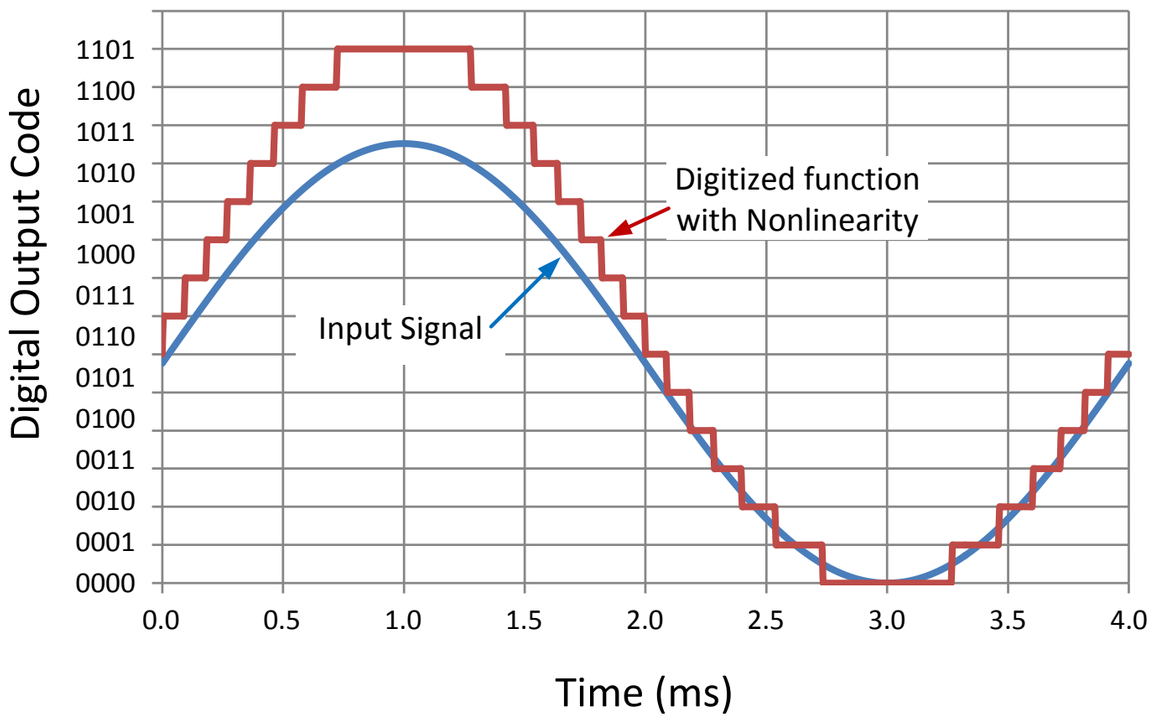

Total Harmonic Distortion (THD), THD+N

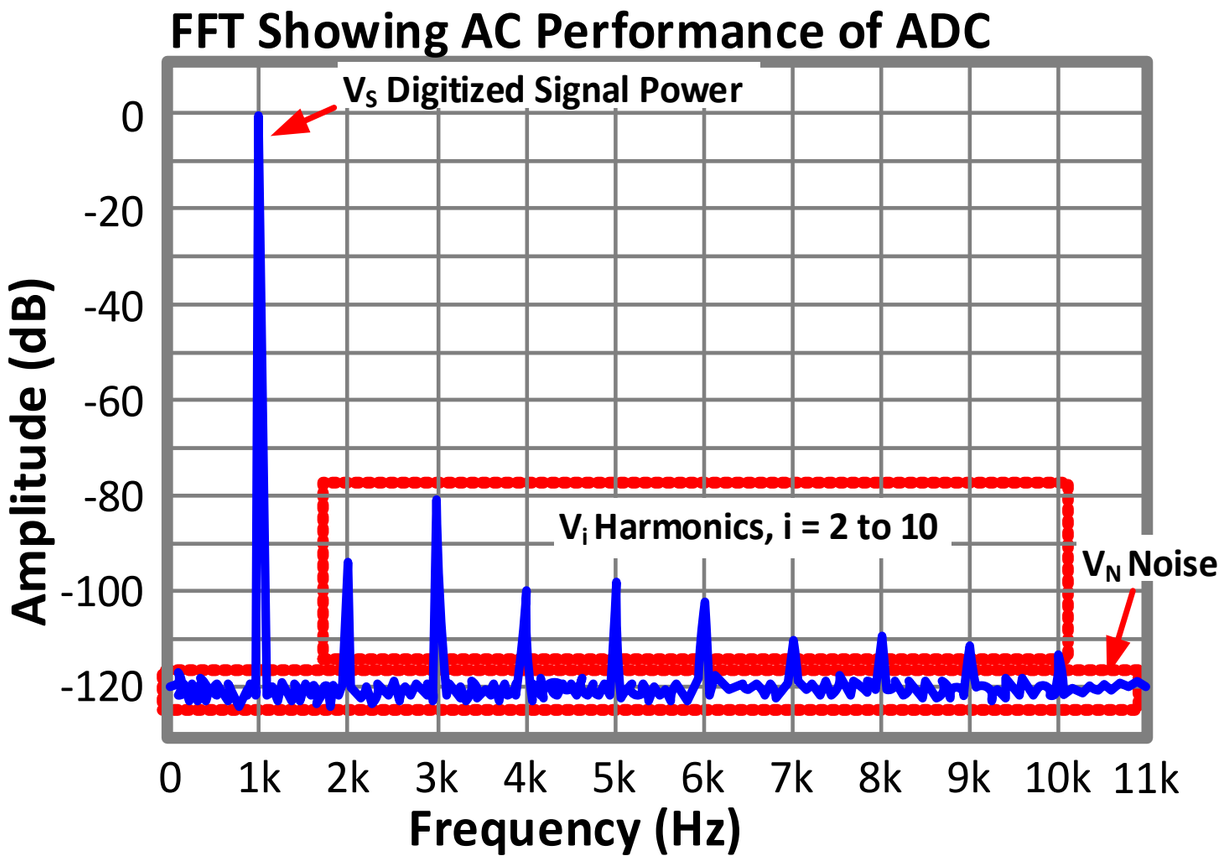

$$THD(\%) = \sqrt{\frac{\sum_{i=2}^{10} V_i^{\,2}}{V_S^{\,2}}} \cdot 100$$

$$THD(dB) = 20 \cdot log\left(\sqrt{\frac{\sum_{i=2}^{10} V_i^{\,2}}{V_S^{\,2}}}\right)$$

$$(THD + N)(dB) = 20 \cdot log\left(\sqrt{\frac{\sum_{i=2}^{10} V_i^{\,2} + V_N^{\,2}}{V_S^{\,2}}}\right)$$

$$SINAD(dB) = 20 \cdot log\left(\sqrt{\frac{V_S^{\,2}}{\sum_{i=2}^{10} V_i^{\,2} + V_N^{\,2}}}\right)$$

Total Harmonic Distortion (THD), THD+N

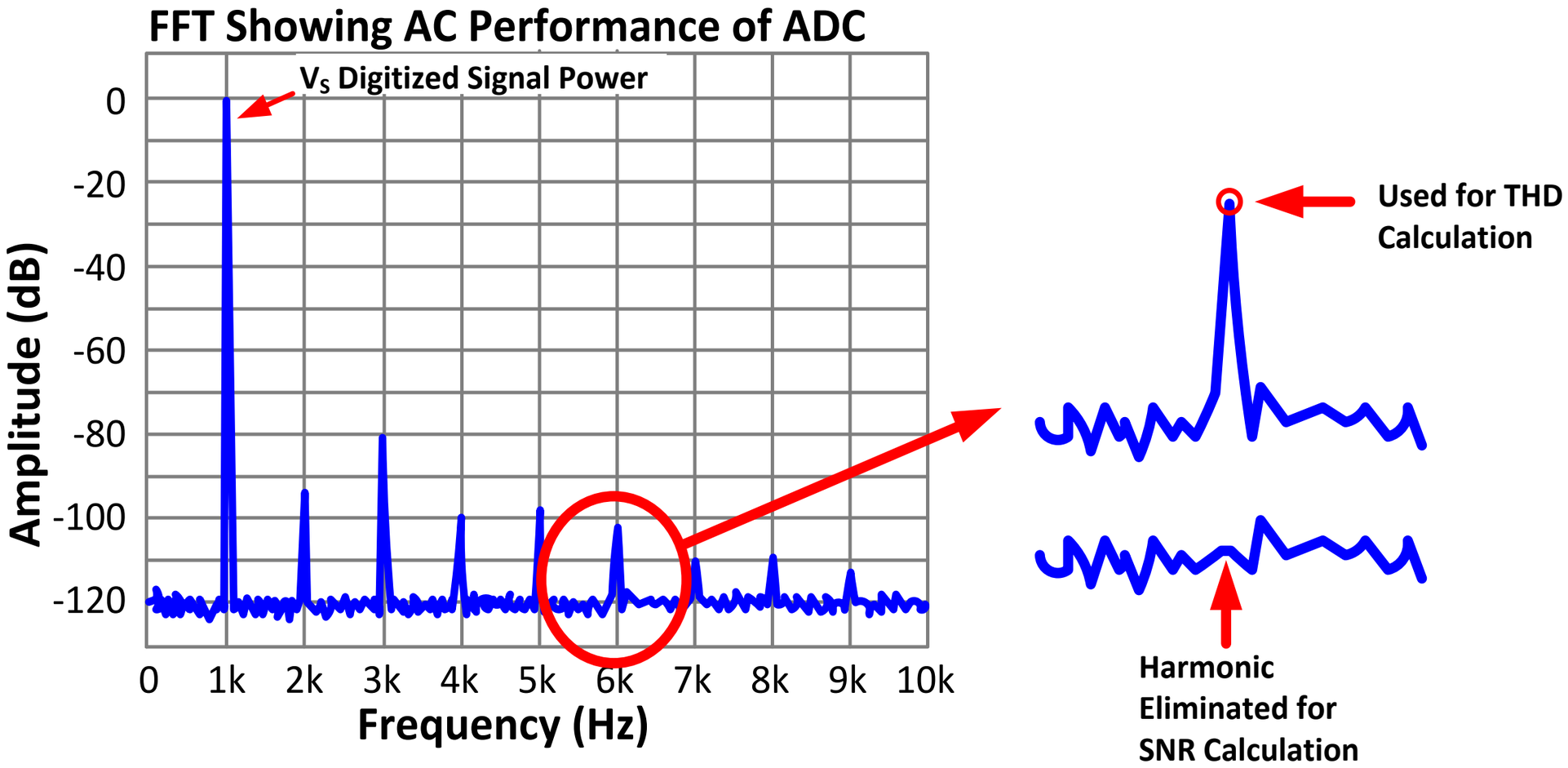

Definition for time to frequency transformations

$$\mathrm{F}(\omega) = \frac{1}{2\pi} \int_{-\infty}^{+\infty} f[t] \cdot e^{-i\omega t}\, dt$$

Fourier Transform (continuous time) Used for digitized waveforms
Where
F[ω] = frequency domain continuous function
f[t] = time domain continuous function
t = time
ω = angular freqeuncy

$$\mathrm{F[k]} = \sum_{n=0}^{N-1} f[n] \cdot e^{-i2\pi k \frac{n}{N}}$$

Fast Fourier Transform (FFT)
Used for digitized waveforms
Where
F[k] = sample in freqeuncy
f[n] = sample in time
n = time index
k = frequency index
N = number of samples
N must be a power of 2 (e.g. 256, 512, 1024…)

FFT Basics: Alias and Frequency Resolution

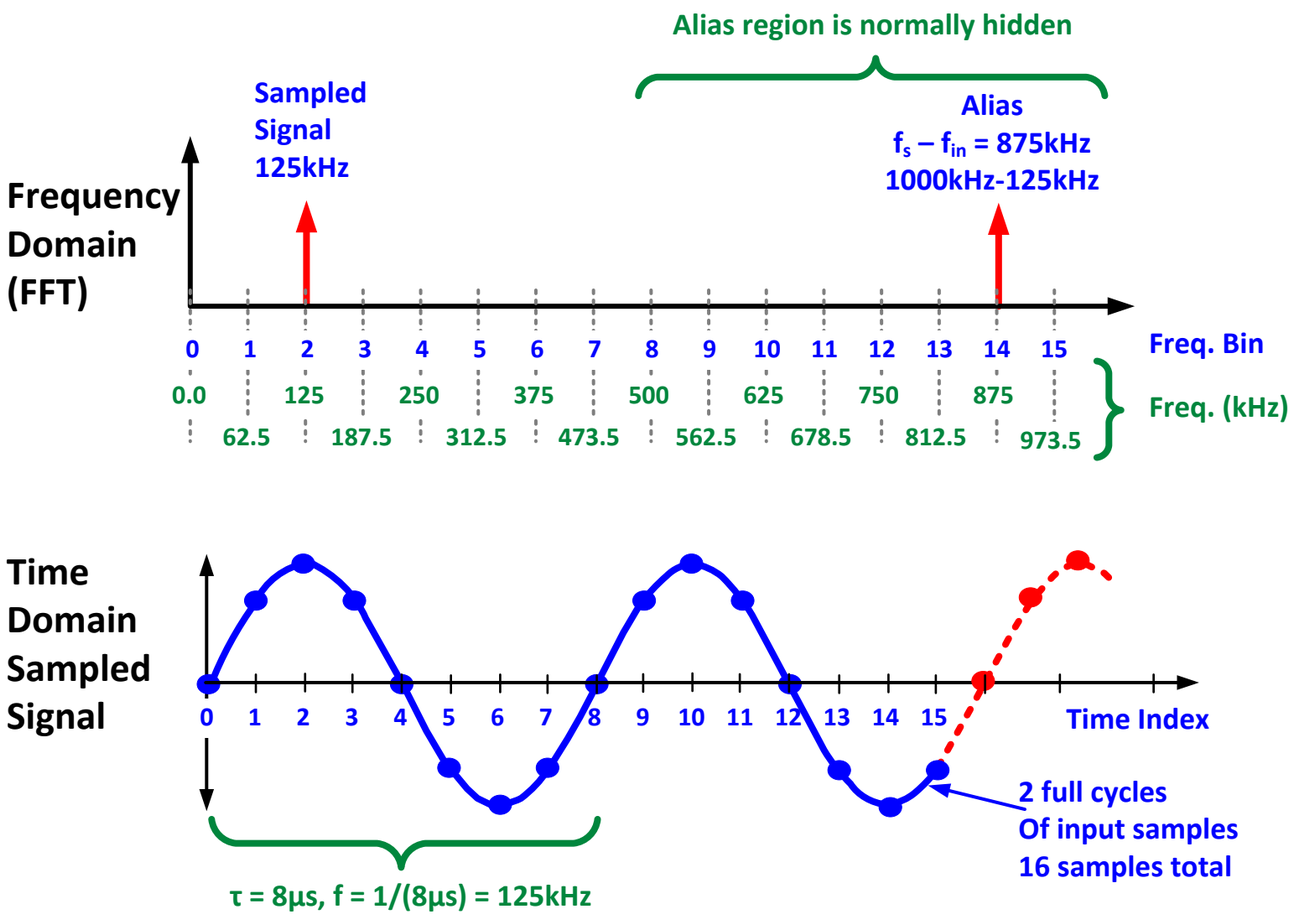

1. FFT assumes time domain continues forever
2. Number of points in time domain equals number of points in FFT
3. The alias region is normally hidden. Mirror image about fs / 2 “aliasing”
4. Frequency Resolution = Δf = fs / N

   Δf = fs / N = 1MHz / 16 = 62kHz

Alias is a Mirror Image of Sampled Signal

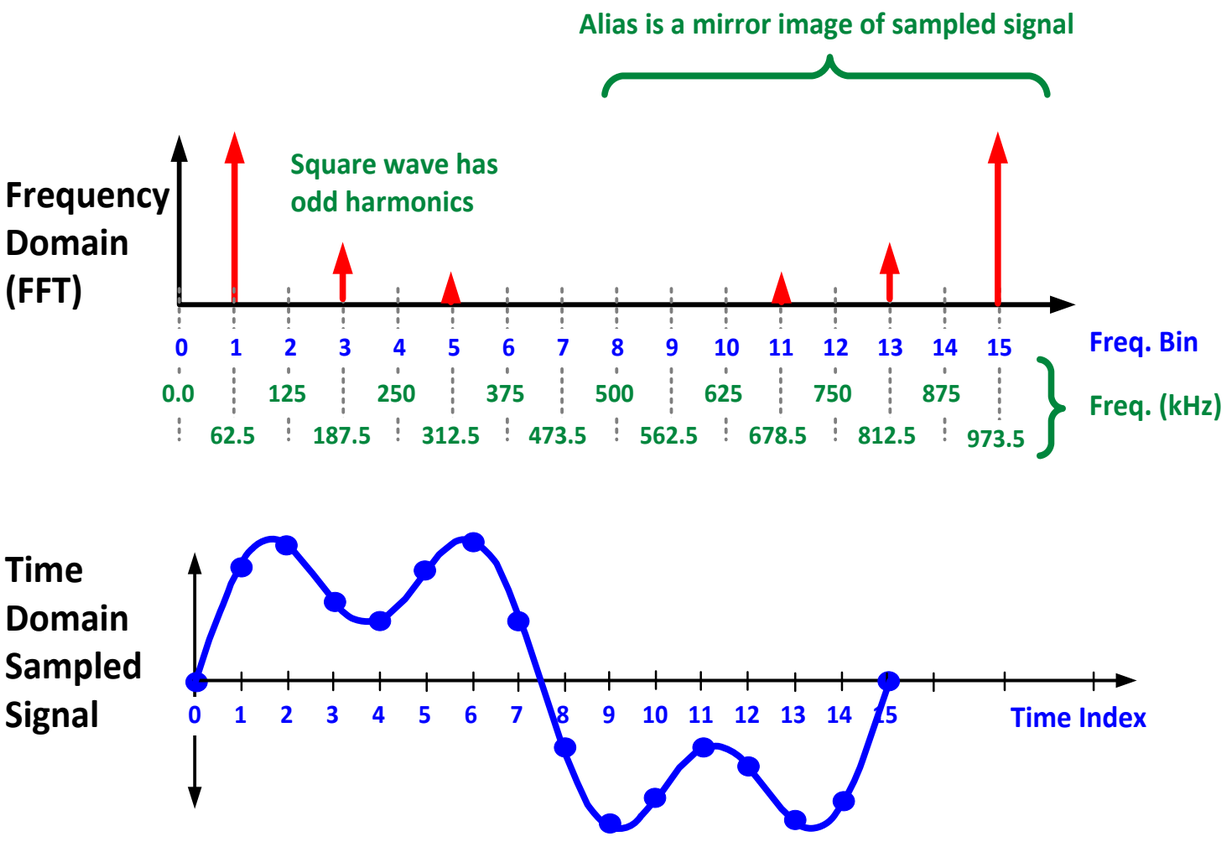

- Example of a “square wave”
- Square wave contains odd harmonics e.g. 3, 5, 7 …
- Notice the symmetry around 500kHz

FFT Example Calculation

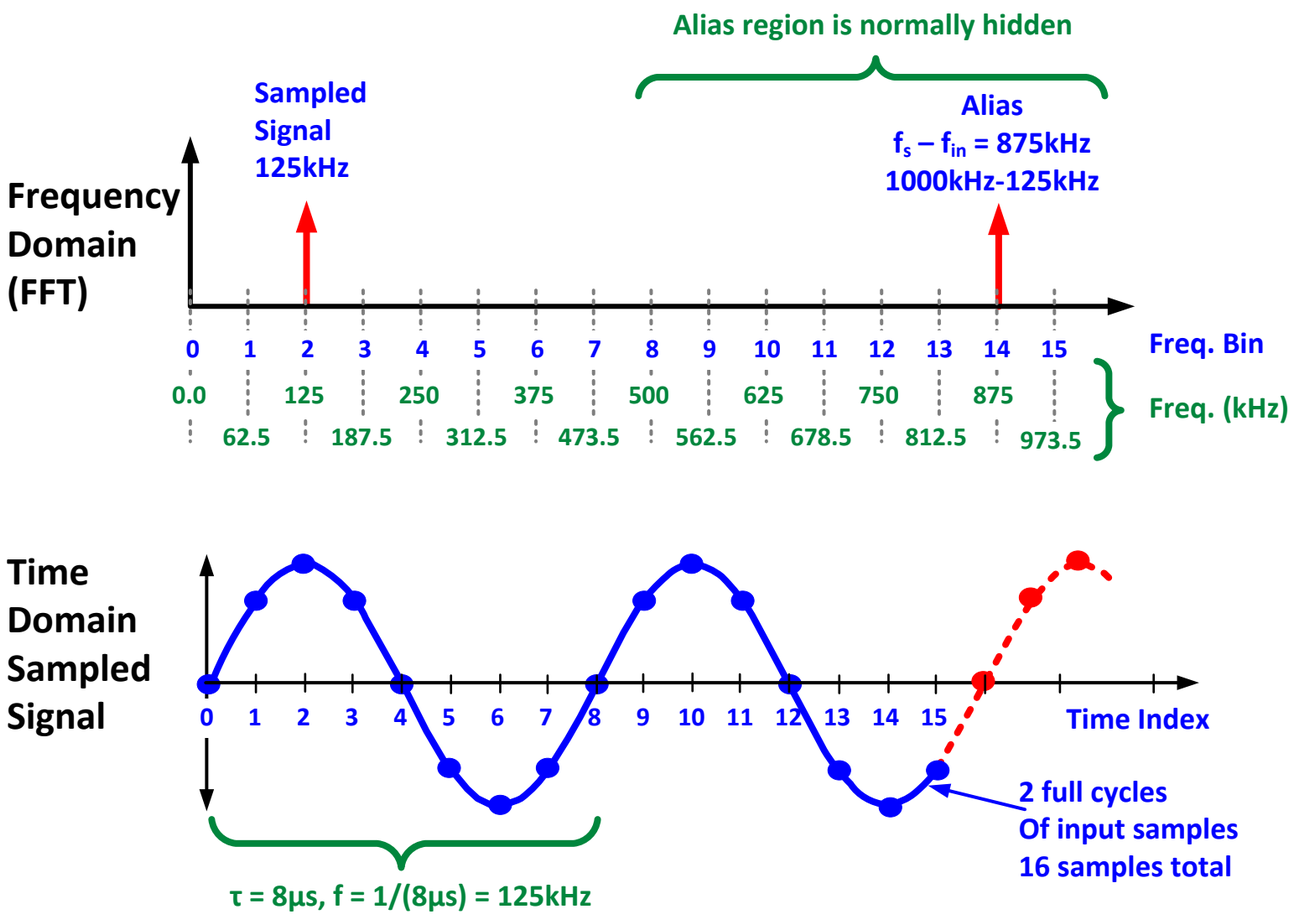

Example FFT

$f_s = 1\text{MHz}$	Sampling Rate
$N_{samp} = 16$	Number of Samples
$\Delta f = \frac{f_s}{N_{samp}} = \frac{1\text{MHz}}{16} = 62.5kHz$	Frequency Resolution
$\Delta t = \frac{1}{f_s} = \frac{1}{1\text{MHz}} = 1\mu s$	Sampling time
$f_{in} = 125kHz$	Input signal
$k_f = \frac{f_{in}}{\Delta f} = \frac{125kHz}{62.5kHz} = 2.0$	Frequency Bin Note: f_{in} is an exact integer multiple of Δf

FFT – Spectral Leakage

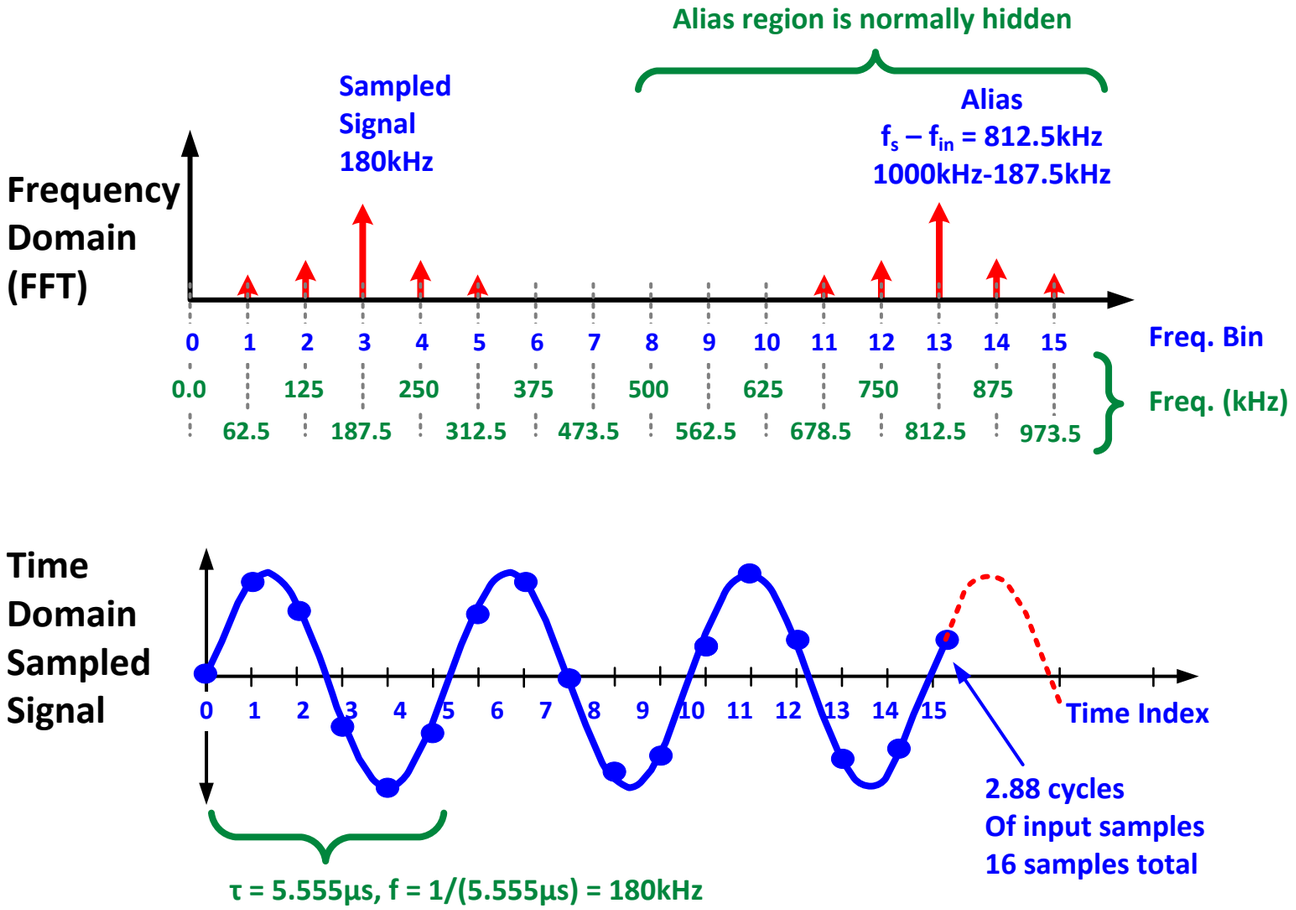

Example FFT

$f_s = 1\text{Msps}$	Sampling Rate
$N_{samp} = 16$	Number of Samples
$\Delta f = \frac{f_s}{N_{samp}} = \frac{1\text{Msps}}{16} = 62.5ksps$	Frequency Resolution
$\Delta t = \frac{1}{f_s} = \frac{1}{1\text{Msps}} = 1\mu s$	Sampling time
$f_{in} = 180kHz$	Input signal
$k_f = \frac{f_{in}}{\Delta f} = \frac{180kHz}{62.5ksps} = 2.88$	Frequency Bin Note: f_{in} is NOT an exact integer multiple of Δf

Window: Eliminates discontinuity in sampled waves

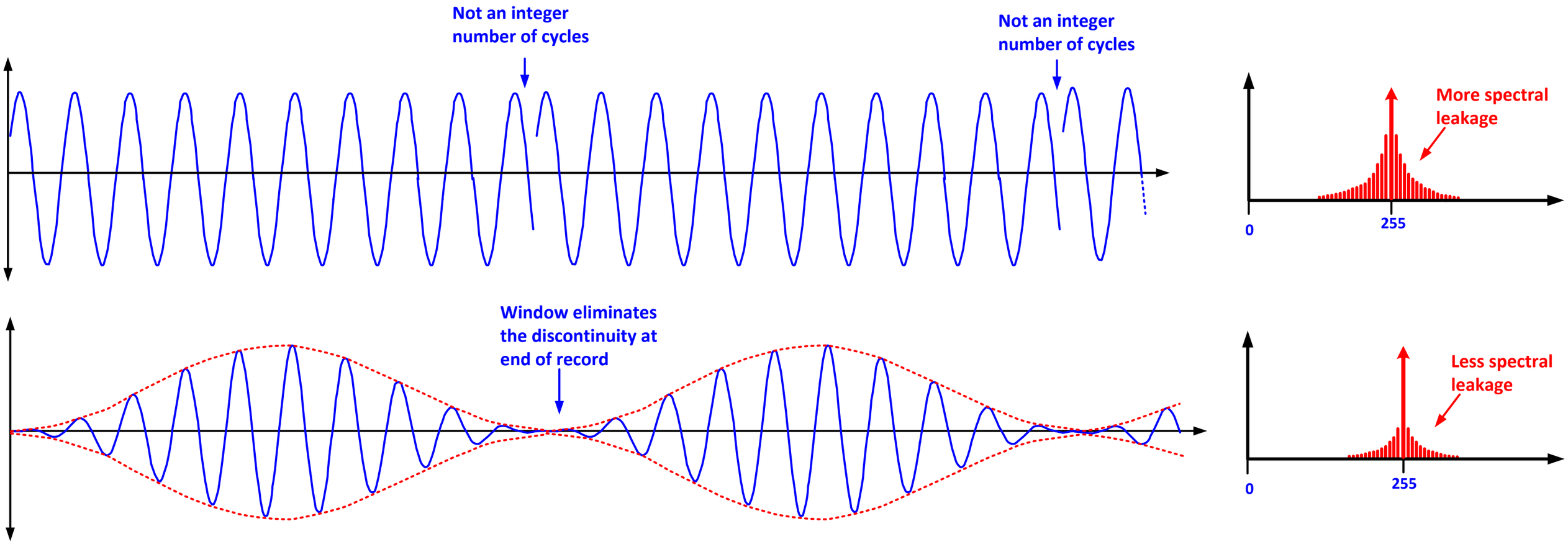

Comparing Frequency Response of Different Windows

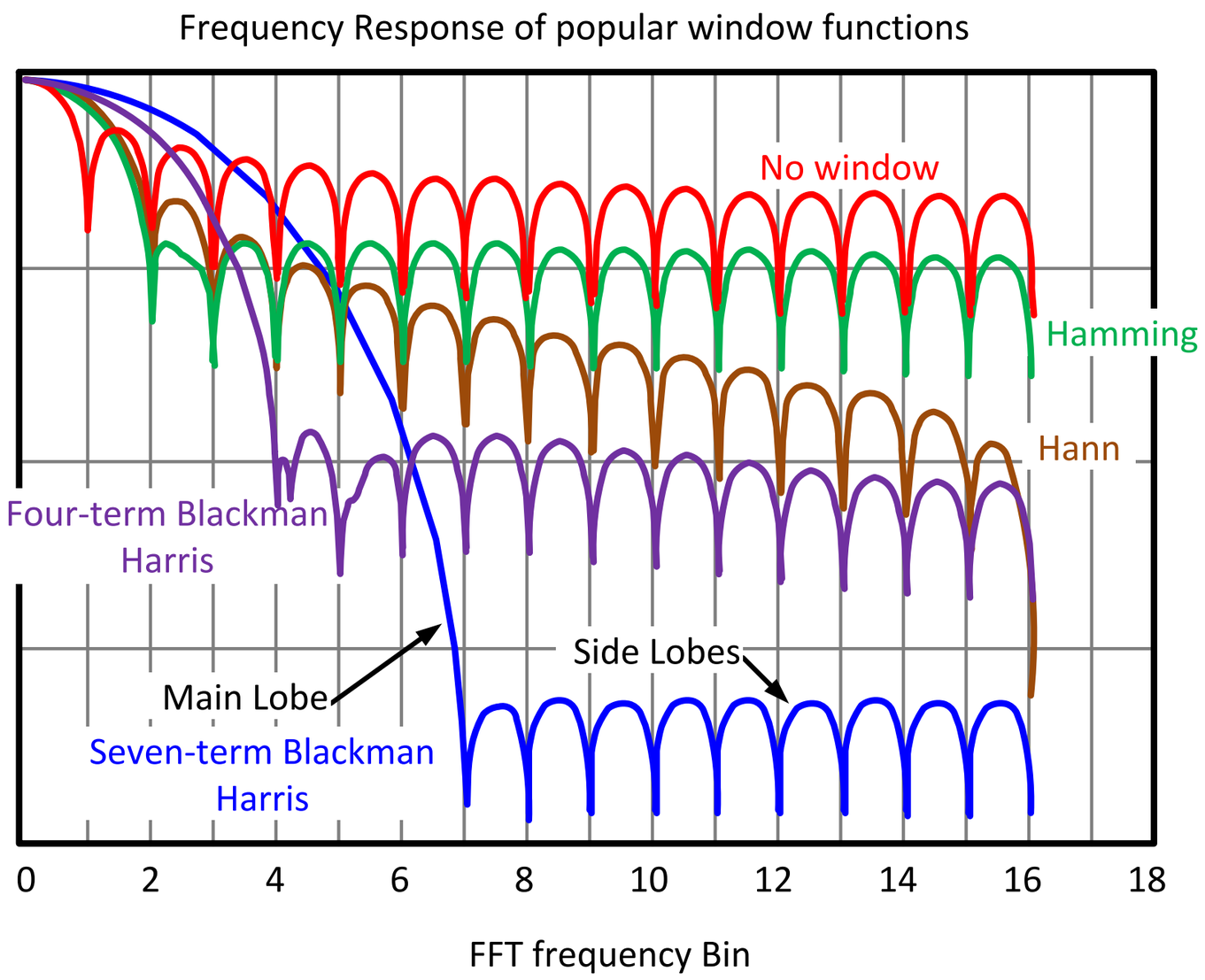

- Ideally we would like a very narrow main lobe and very deep attenuation in side lobes.
- For ADC characterization 7 term Blackman Harris is most often used.

Ideal Situation: Coherent Sampling

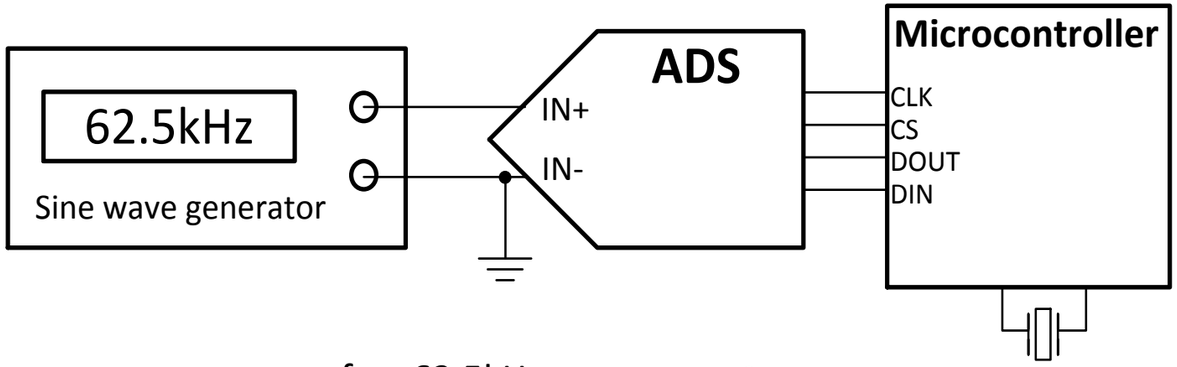

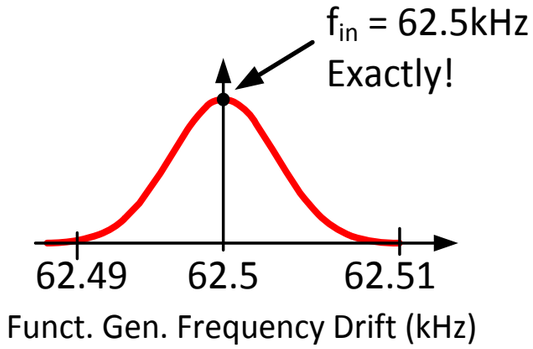

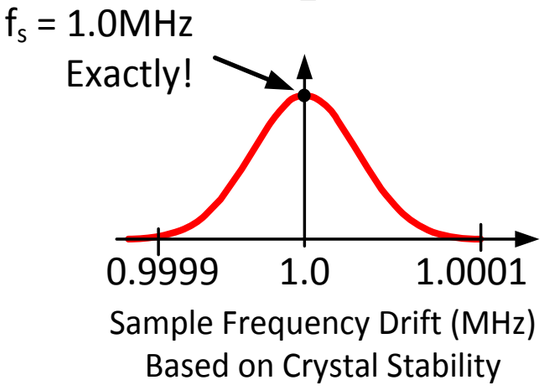

Example FFT

$f_s = 1\text{Msps}$	Sampling Rate
$N_{samp} = 256$	Number of Samples
$\Delta f = \frac{f_s}{N_{samp}} = \frac{1\text{Msps}}{256} = 3.90625ksps$	Frequency Resolution
$f_{in} = 62.5kHz$	Input signal
$k_f = \frac{f_{in}}{\Delta f} = \frac{62.5kHz}{3.90625ksps} = 16$	Frequency Bin Note: f_{in} is an exact integer multiple of Δf

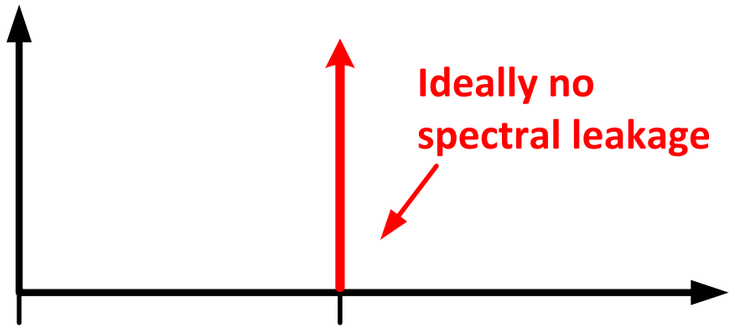

Reality: Non-Coherent Sampling

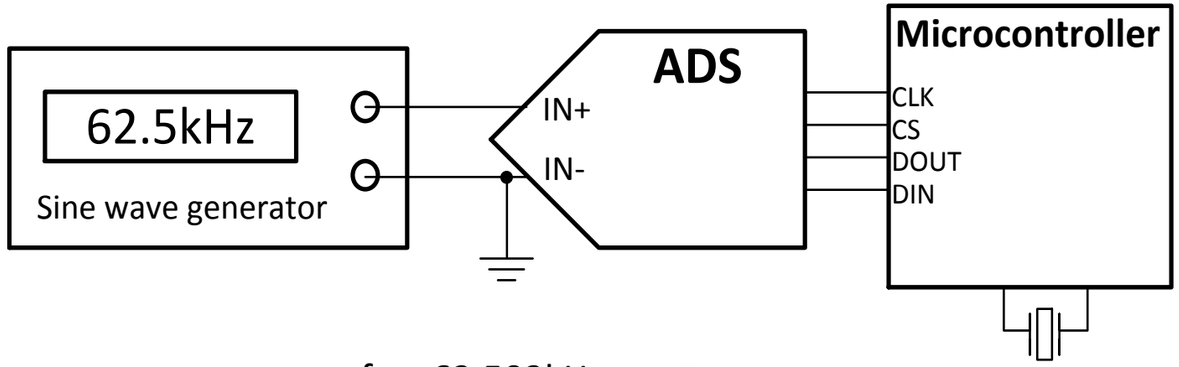

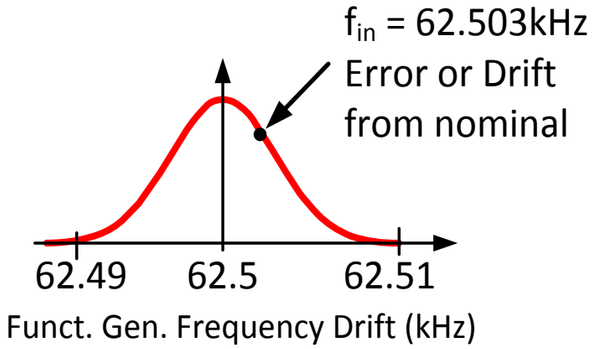

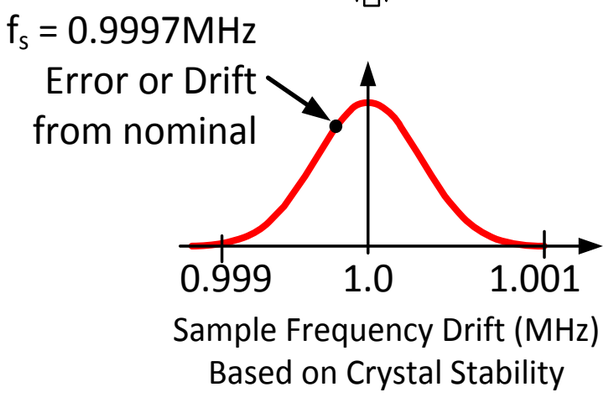

Example FFT

$f_s = 1\text{Msps}$ — Sampling Rate

$N_{samp} = 256$ — Number of Samples

$\Delta f = \frac{f_s}{N_{samp}} = \frac{0.9997\text{Msps}}{256} = 3.905078ksps$ — Frequency Resolution

$f_{in} = 62.503kHz$ — Input signal

$k_f = \frac{f_{in}}{\Delta f} = \frac{62.503kHz}{3.905078ksps} = 16.006$ — Frequency Bin

Note: f_{in} is NOT an exact integer multiple of Δf

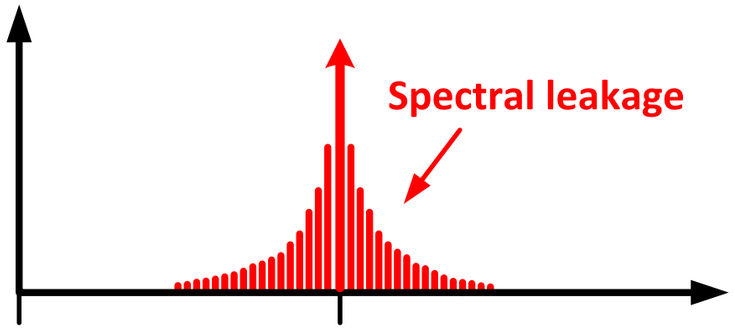

Practical method for coherent sampling

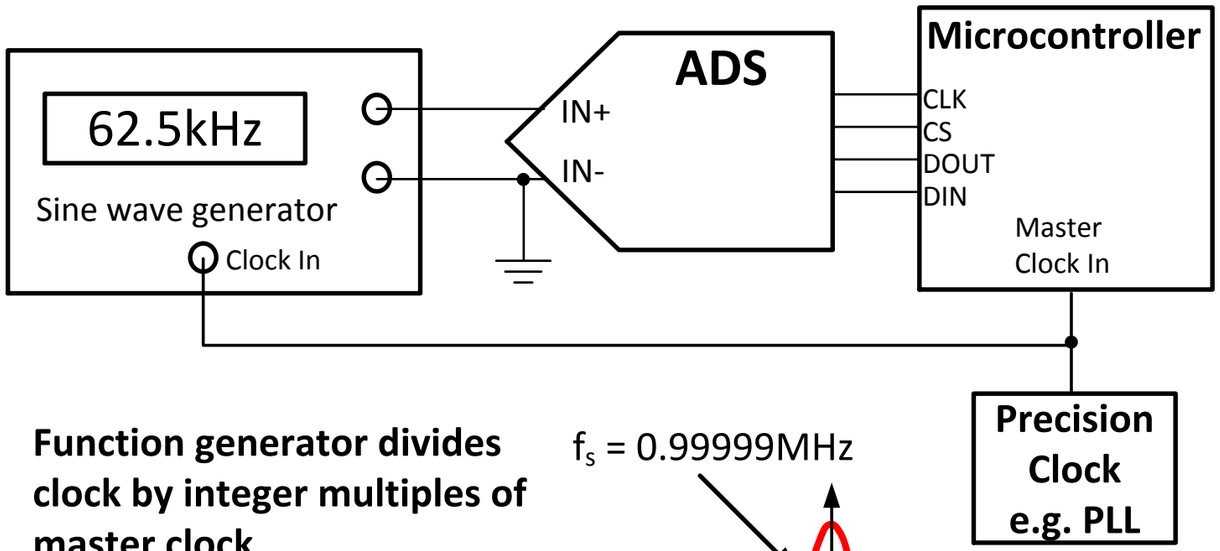

Function generator divides clock by integer multiples of master clock

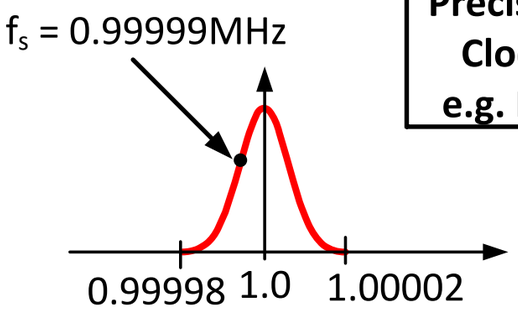

Sample Frequency Drift (MHz)
Based on Crystal Stability

Example FFT

$f_s = 0.99999\text{Msps}$ — Sampling Rate

$N_{samp} = 256$ — Number of Samples

$$\Delta f = \frac{f_s}{N_{samp}} = \frac{0.99999\text{Msps}}{256} = 3.90589ksps$$ — Frequency Resolution

$$f_{in} = 16 \cdot \Delta f = 62.499375kHz$$ — Input signal Related to f_s Frequency Bin

$$k_f = \frac{f_{in}}{\Delta f} = \frac{62.499375kHz}{3.90625ksps} = 16$$

Note: f_{in} is an exact integer multiple of Δf

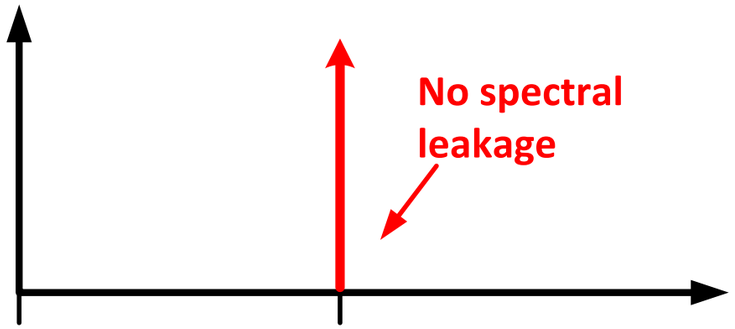

Using a filter to clean up signal source

Band pass Filter

ADC
Evaluation Module

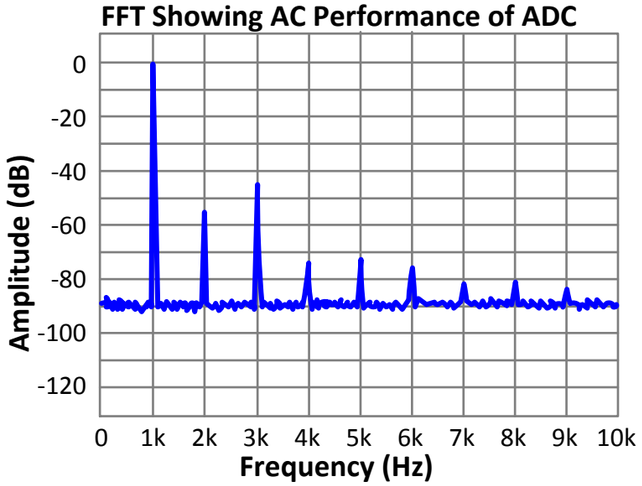

12 bits resolution
THD = 79dB, SNR =50dB

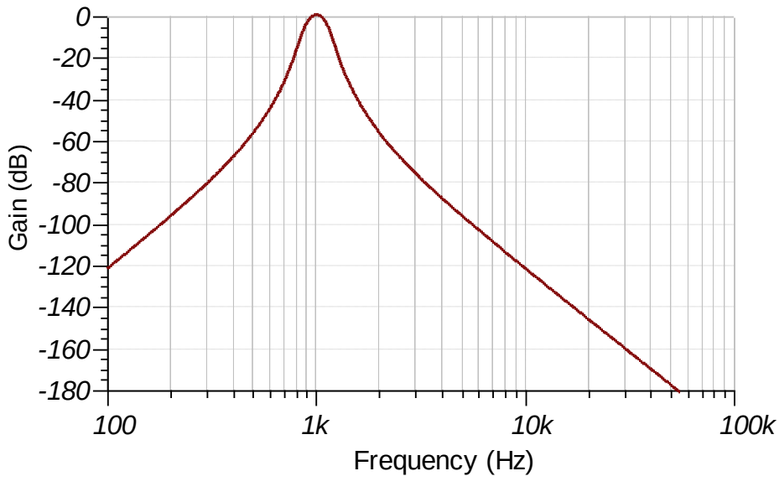

8th order filter

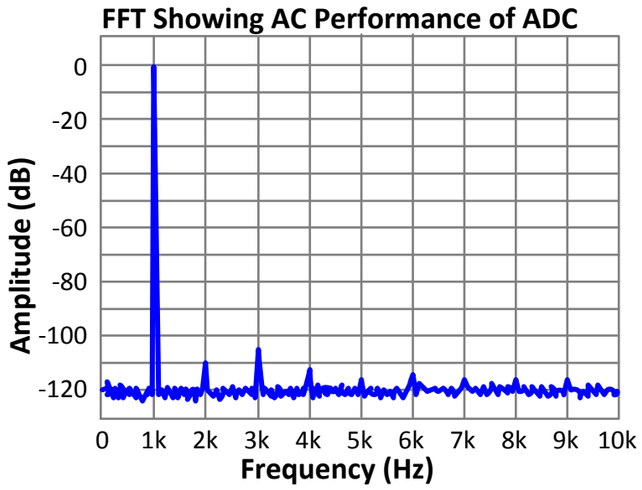

THD = 125dB, SNR =100dB

A practical example

Number of samples in FFT.
Increasing number of samples:

1. Increases frequency resolution
2. Minimizes impact of spectral leakage
3. Many samples increases measurement time and potential of frequency drift

Window type: 7 term Blackman-Harris works best for most ADC characterization.

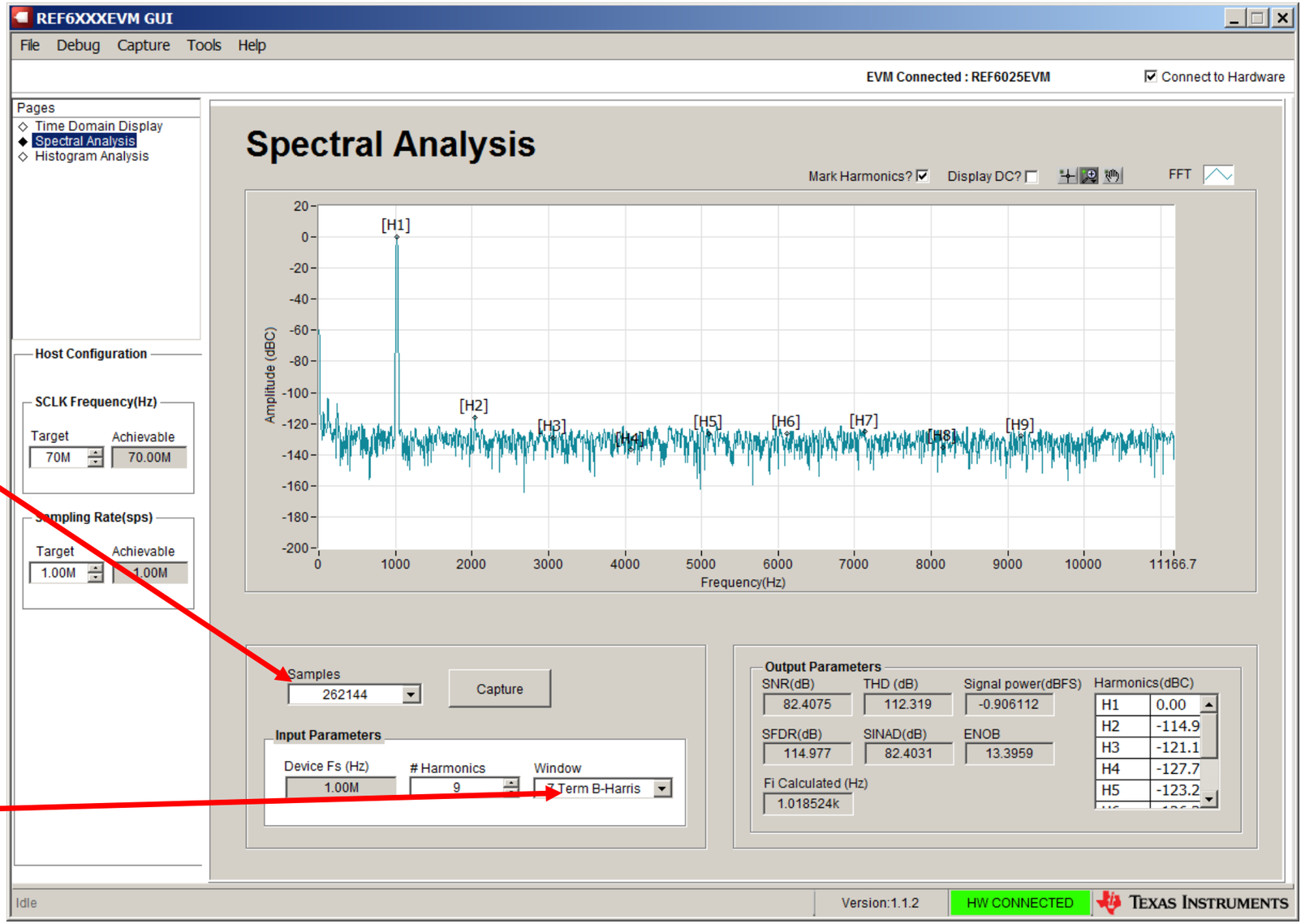

Agenda

1. **ADC Input types**
   a) Single ended, pseudo-differential, fully-differential, and true-differential
   b) Switched capacitor vs. buffered
2. **Linear operation of amplifier and ADC**
   a) Rail-to-Rail amplifiers and crossover distortion
   b) Inverting configuration
3. **Common Front Ends**
   a) Instrumentation amplifier: Selecting gain and common mode range
   b) Fully Differential Amplifiers: Single Ended to Differential
4. **Error Sources:**
   a) Statistics: Worst Case vs. Typical
   b) Offset and Gain Error
   c) Calibration
   d) Drift and Non-linearity
   e) Noise
5. **AC Specifications and the FFT**
6. **Aliasing**

Aliasing: Time Domain vs. Frequency Domain

Time Domain

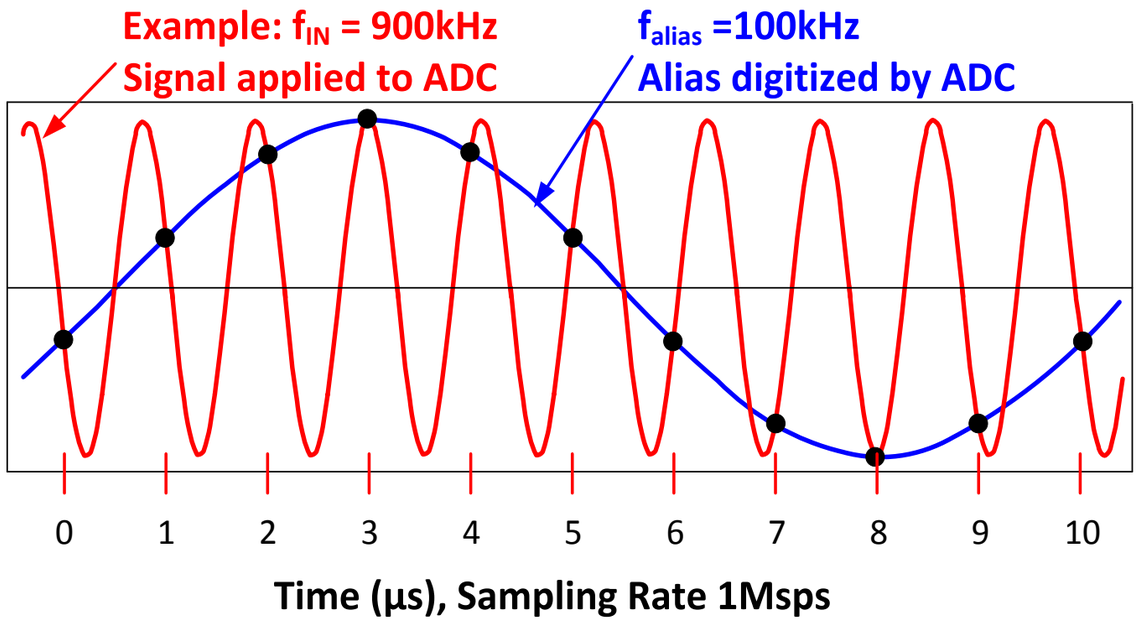

Frequency Domain

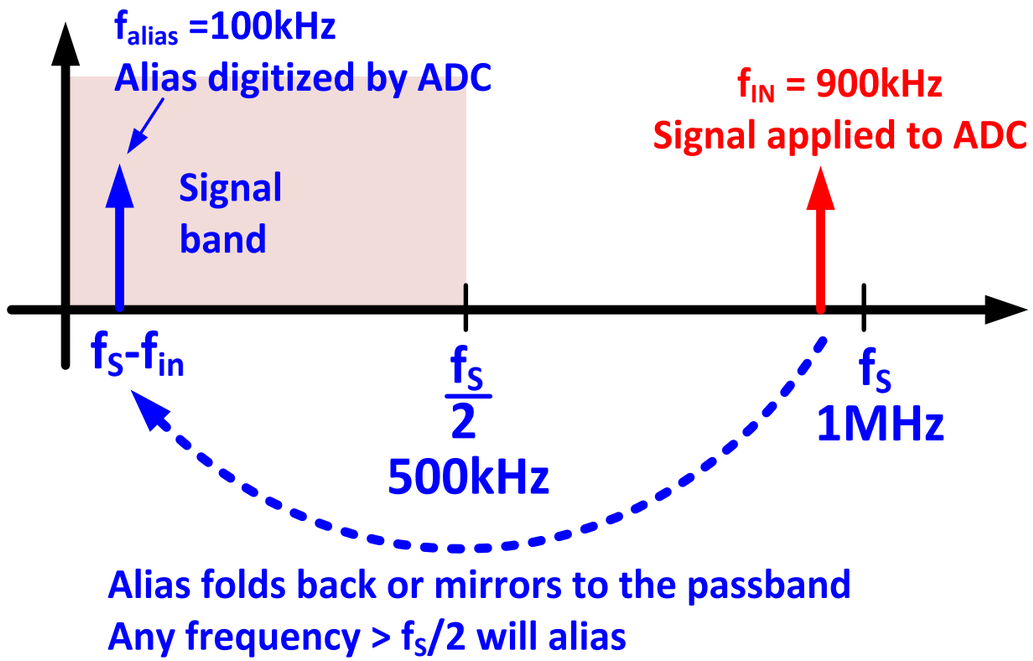

Nyquist frequency = fs/2, the maximum input signal without aliasing.

Anti-aliasing filter (f_s = 1Msps)

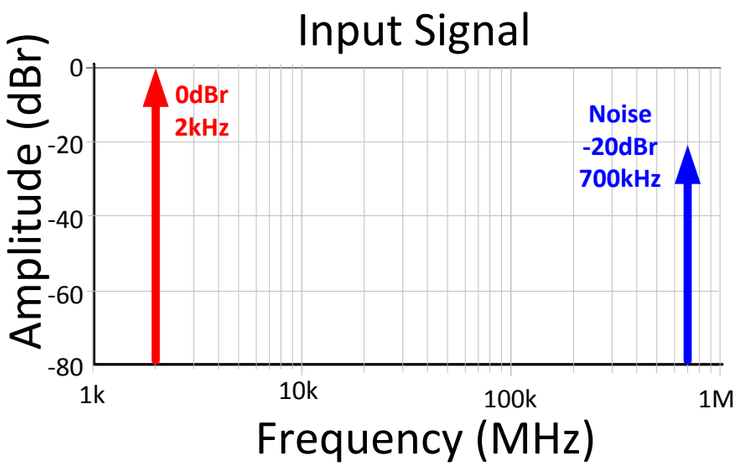

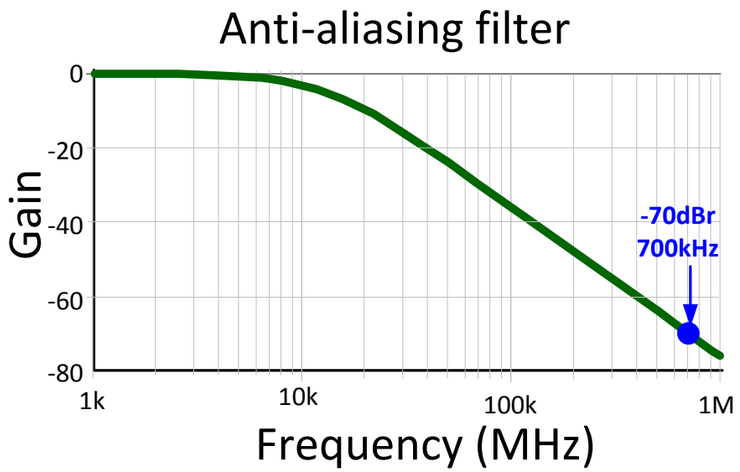

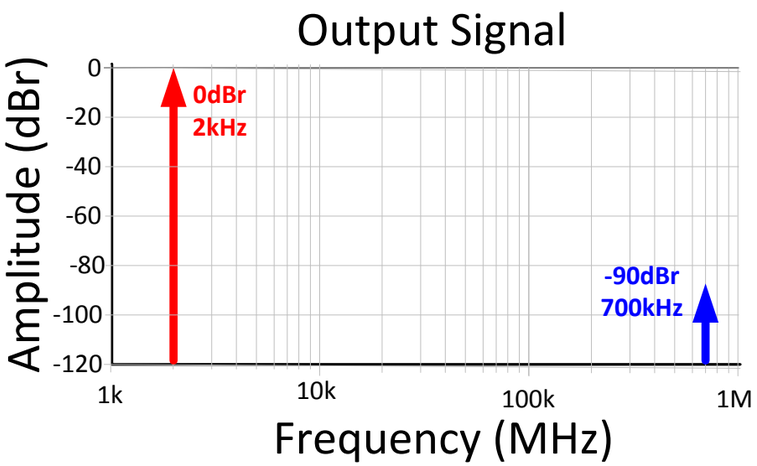

Sampling frequency = fs = 1Msps

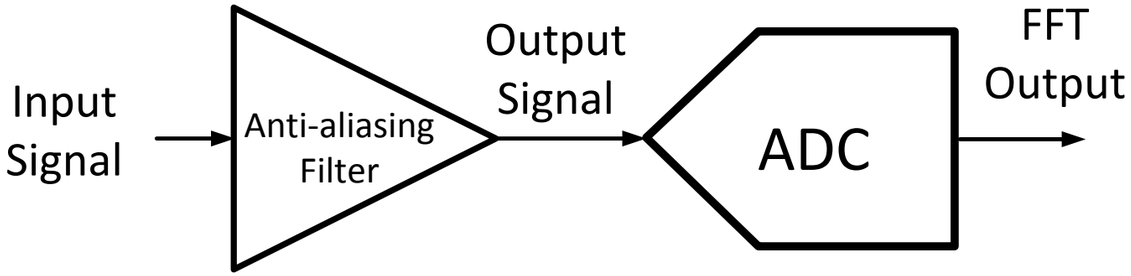

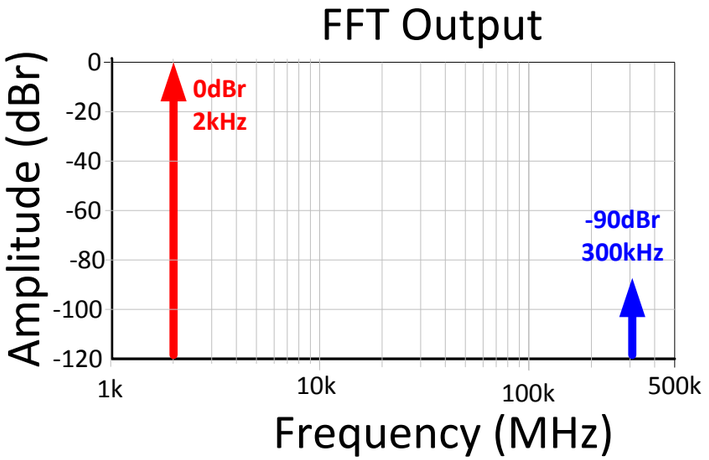

SAR Anti-aliasing Filter Design

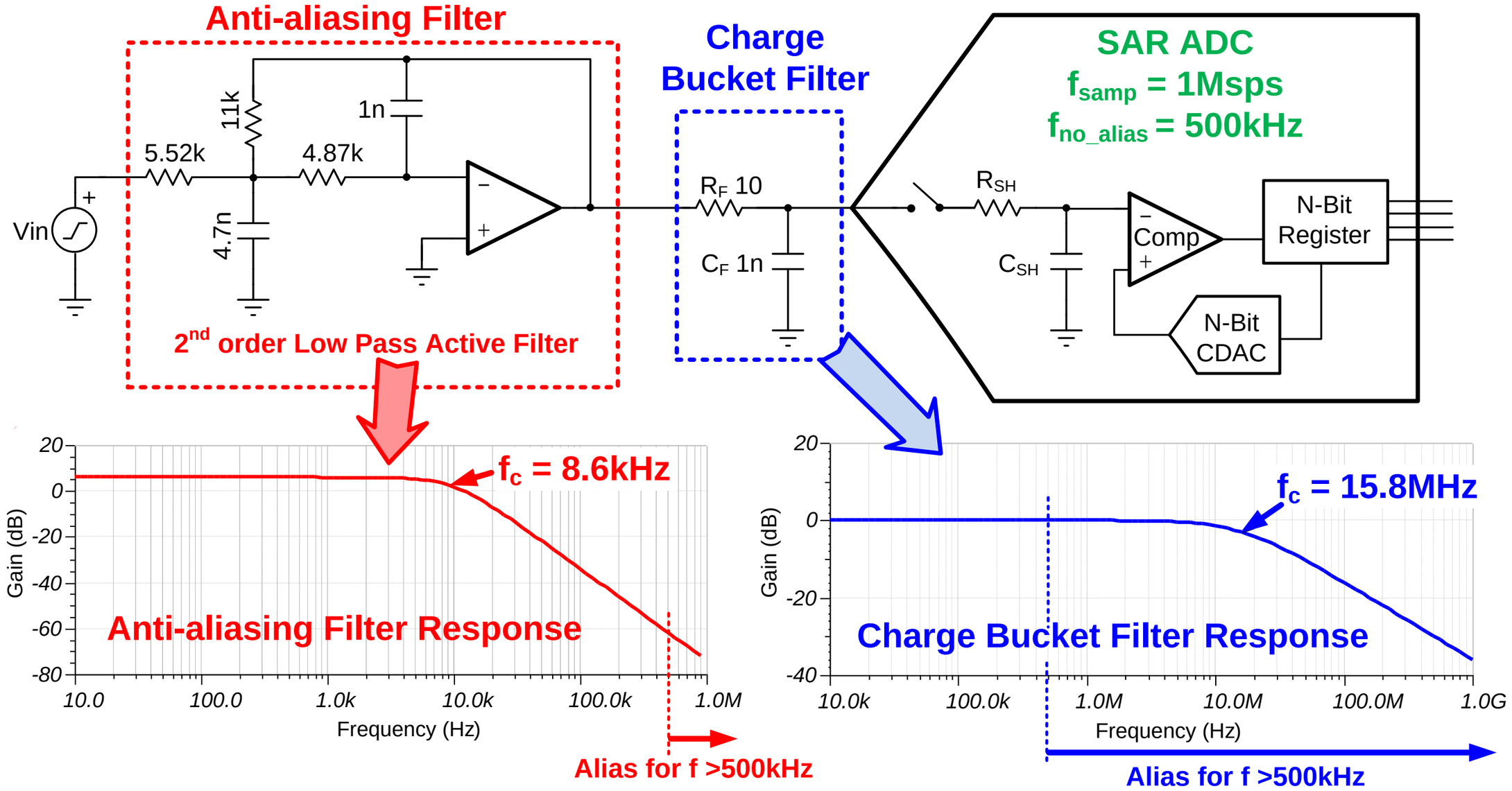

What's the "Charge Bucket" for?

Capacitor Charging Kickback

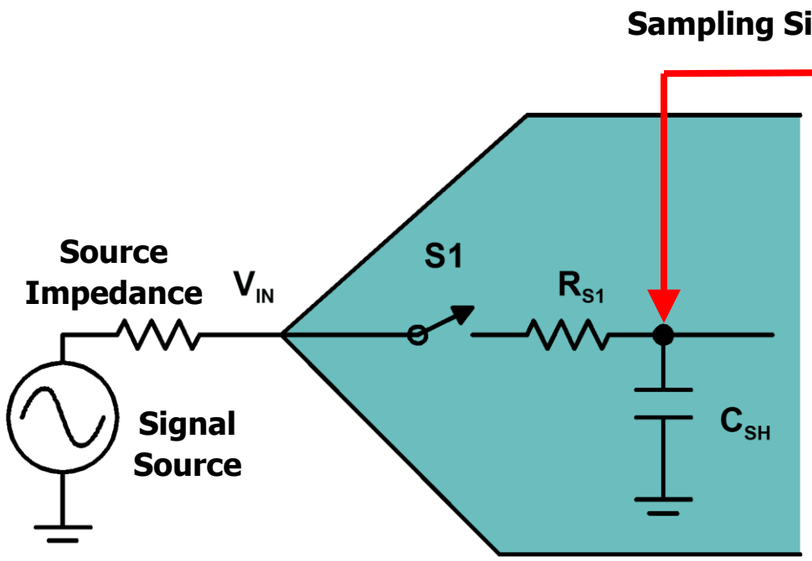

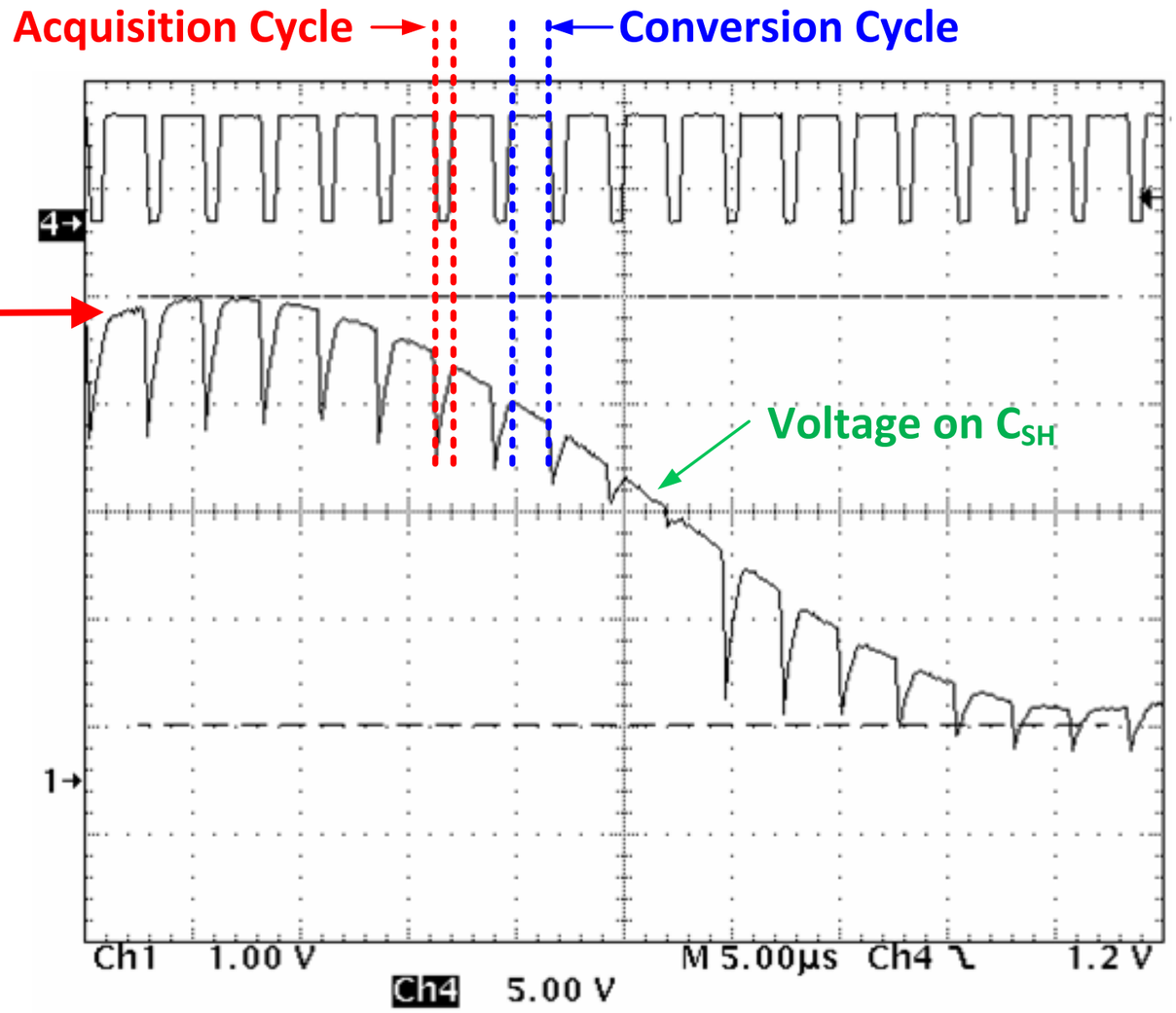

Texas Instruments

Thanks for your time!