TECH DAYS
Texas Instruments

The Multiple Ins and Outs of Multiplexers

Andrew Mason

Applications Engineer

Training Summary

TECH DAYS
Texas Instruments

The Multiple Ins and Outs of Multiplexers (And Signal Switches):

Become the Master… of Multiplexers and Signal Switches. Muxes and Switches are used in a variety of applications for a variety of reasons. The audience will lean how different parametric performance characteristics impact their system and what to look for, potential additional features with their benefits/trade-offs and how the architecture of the switch affects the parametric performance.

What you'll learn:

- Understand how each parametric item describes the switch behavior
- Learn the implications of the parametric performance and the impact on overall system performance
- Understand additional features of a mux/switch and the associated benefits
- Know the architecture of the mux/switch you use by looking at the parametrics

Training level: Fundamental and Intermediate

Course Details:

Audience: Analog

Specific TI Designs & Parts Discussed:

- TI Multiplexer and Switch Portfolio

Andrew Mason
Applications Engineer

- **Career**
  - Applications Engineer, Texas Instruments (2012-2014)
  - Systems Engineer, Texas Instruments (2014-2017)
  - Application Engineer, Texas Instruments (Present)
  - B.S.E.E., Electrical Engineering, University of Florida

- **Expertise**
  - Muxes and Signal Switches
  - Automotive body electronics
  - High speed signal-chain products: HDMI, USB and Audio

Detailed agenda

- Mux/Switch Parametric overview
  - Ideal and non-ideal performance
- Parametric impact on system performance with example applications
- Additional feature benefits
- Different mux/switch architectures and their implications

Parametric overview

Texas Instruments

Mux/Switch applications

Variable Gain

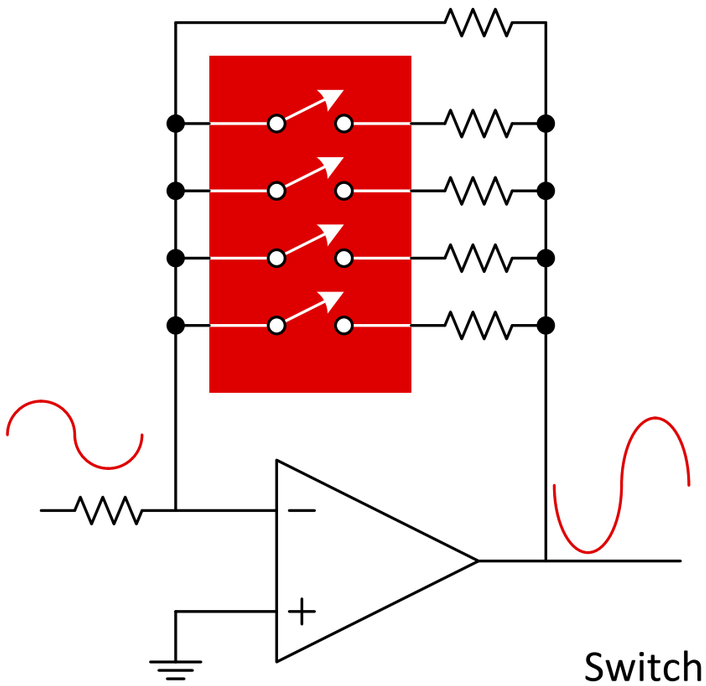

Isolation

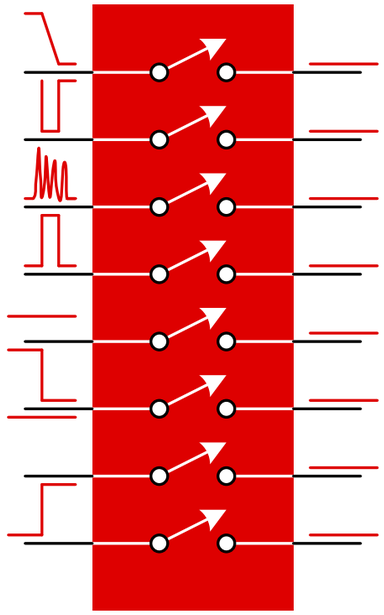

Switching Outputs

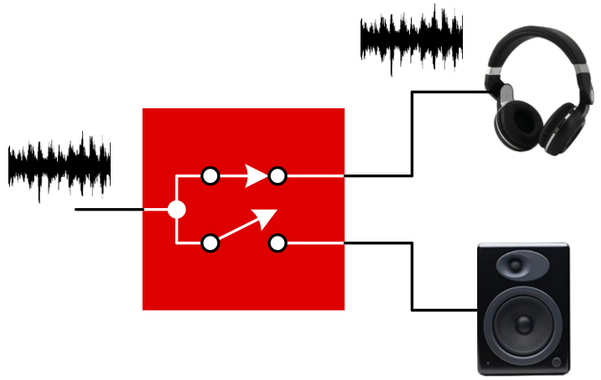

Switching Voltage References

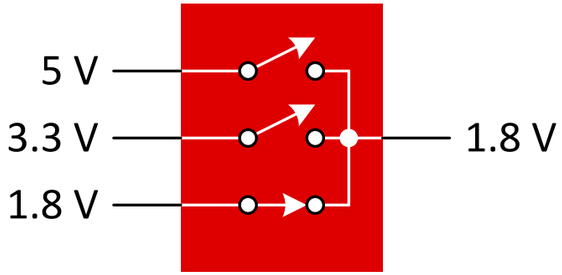

Switching Data Paths

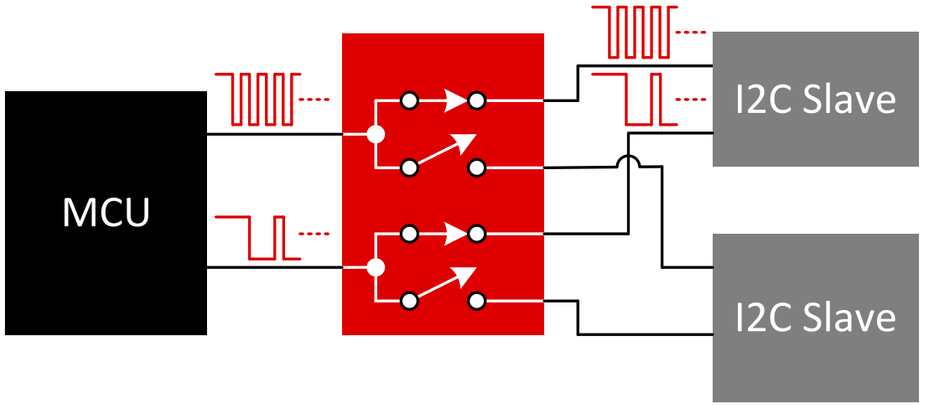

TECH DAYS Texas Instruments
Texas Instruments

Mux vs signal switch

What's the difference?

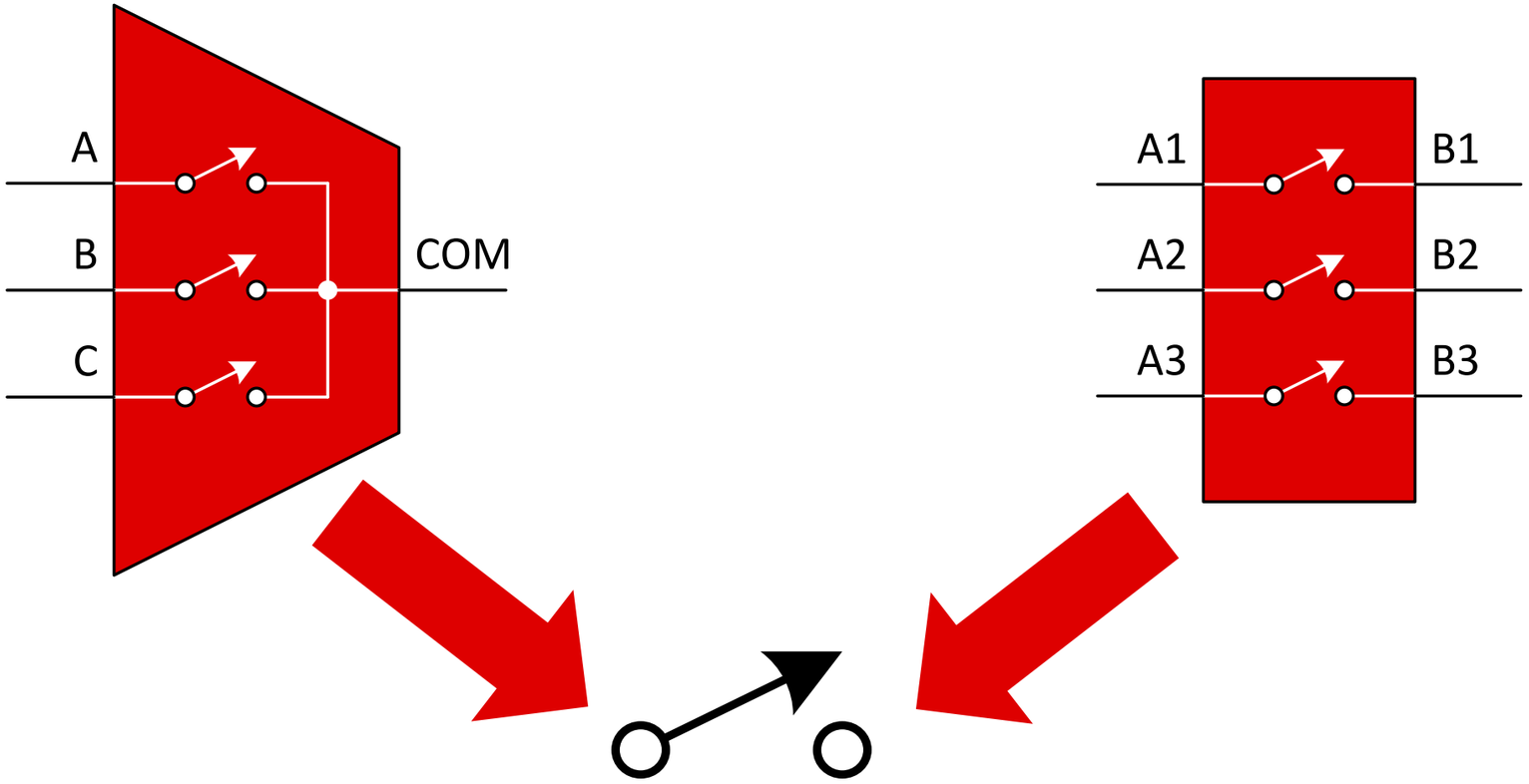

Both use the same structures. Mux usually refers to X inputs to only 1 output or X:1. The term Switch is more used with multiple inputs and outputs.

Ideal vs non-ideal switch

Ideal Switch will act as a wire when on and an open circuit when off.

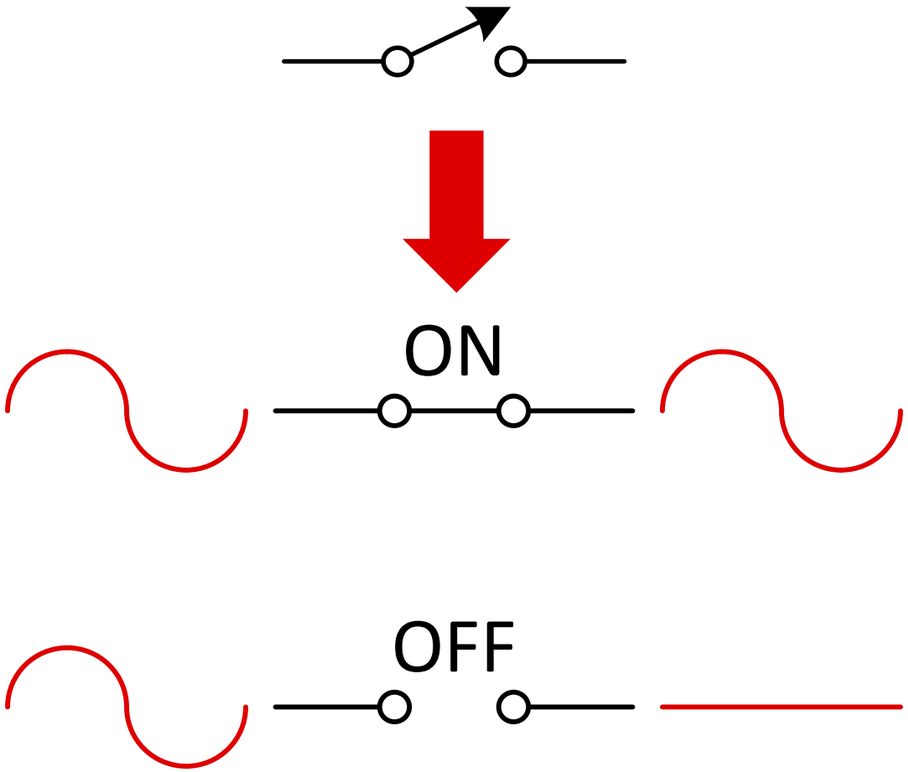

Real switches have a multitude of parasitics that impact system performance.

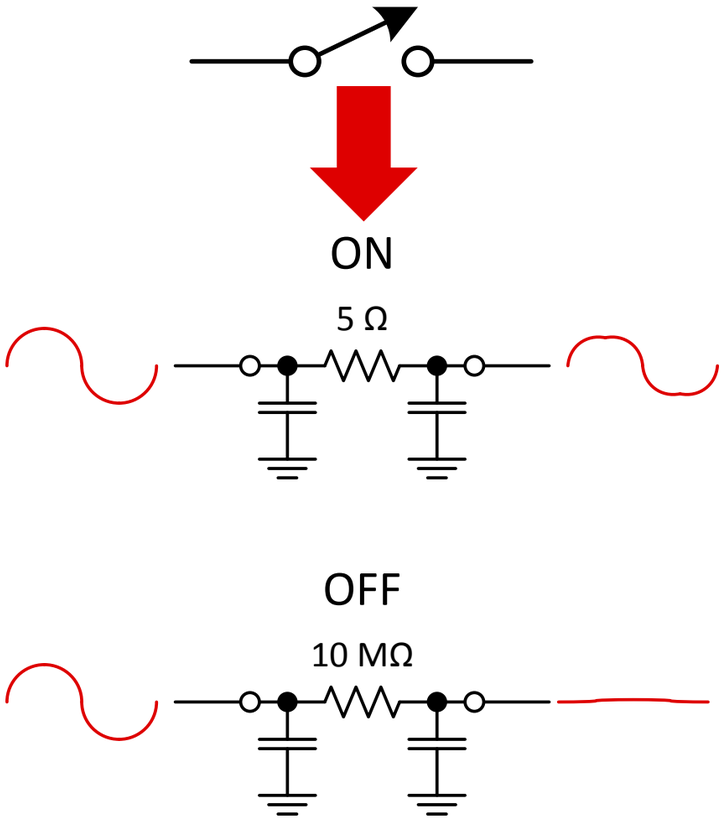

Parametrics

- R_{ON}
- C_{ON}/C_{OFF}
- BW
- Q_C (Charge Injection)
- I_{ON}/I_{OFF} (Leakage)
- t_{SWITCH} (Switching time between channels
- t_{BBM} (Break Before Make time)

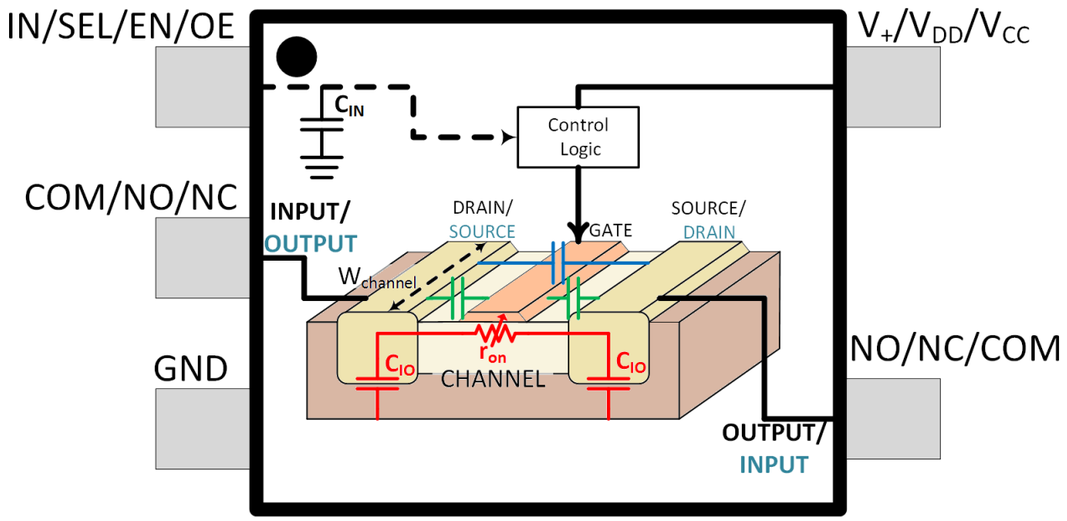

R_{ON}, ΔR_{ON} and $R_{ON(FLATNESS)}$

- $r_{on} \sim \frac{1}{W_{channel}}$
- R_{ON}
  - Measure of resistance between input and output.
  - RON is usually at a discrete point
- $R_{ON(FLATNESS)}$
  - Change in R_{ON} over a range ($R_{ON_MAX} - R_{ON_MIN}$)
    - You can "cheat" and get better $R_{ON(FLATNESS)}$ by making the R_{ON} of a switch smaller
- ΔR_{ON}
  - Difference in R_{ON} between channels

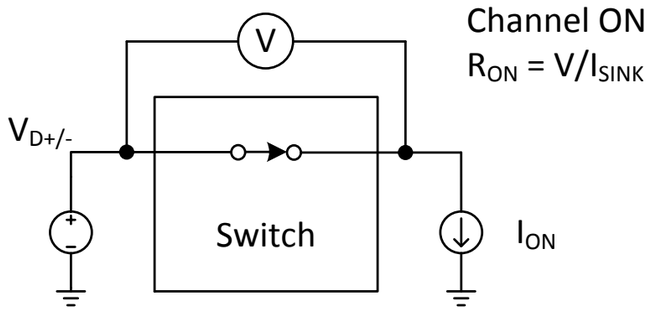

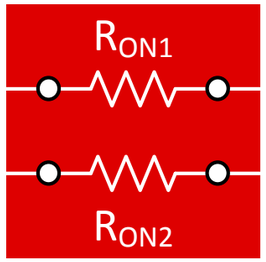

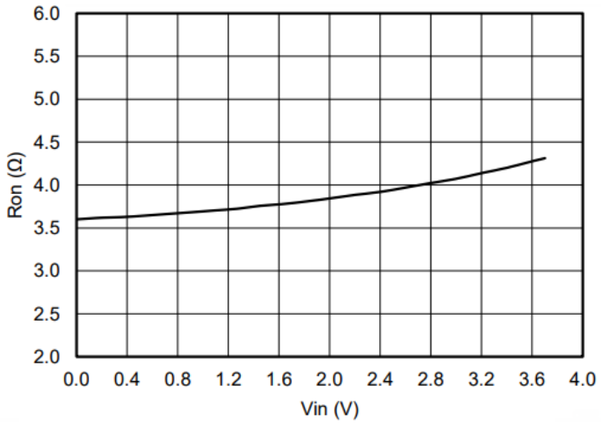

Figure 1. ON-Resistance vs $V_{I/O}$

RON impact on system performance

- R_{ON} is something that can be calibrated for fairly easily (within reason)
  - In the ADC sampling application a software calibration can be used for any losses across the switch
  - In the feedback Muxing application the discrete resistors can be sized (if necessary) to account for the R_{ON}
- What is much more difficult to calibrate for is $R_{ON(FLATNESS)}$
  - Systems designers must account for changing R_{ON} with input voltage!

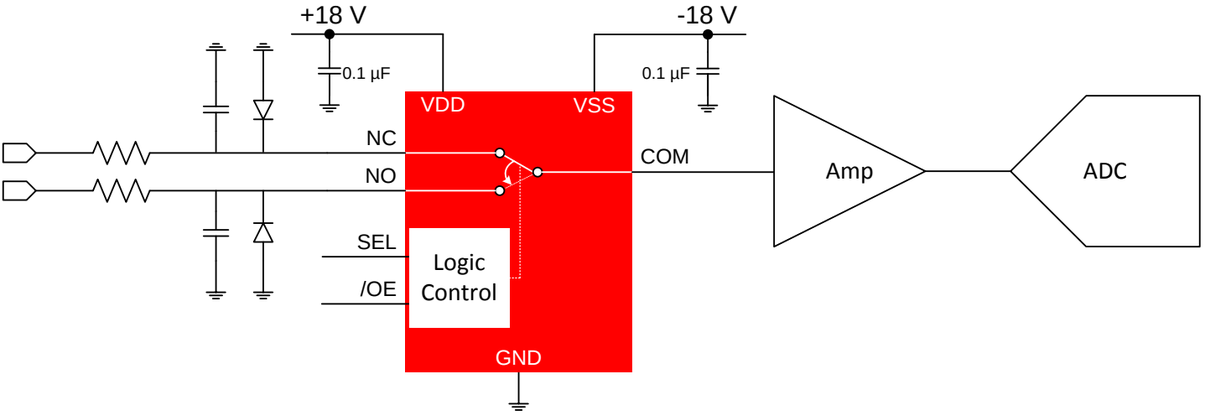

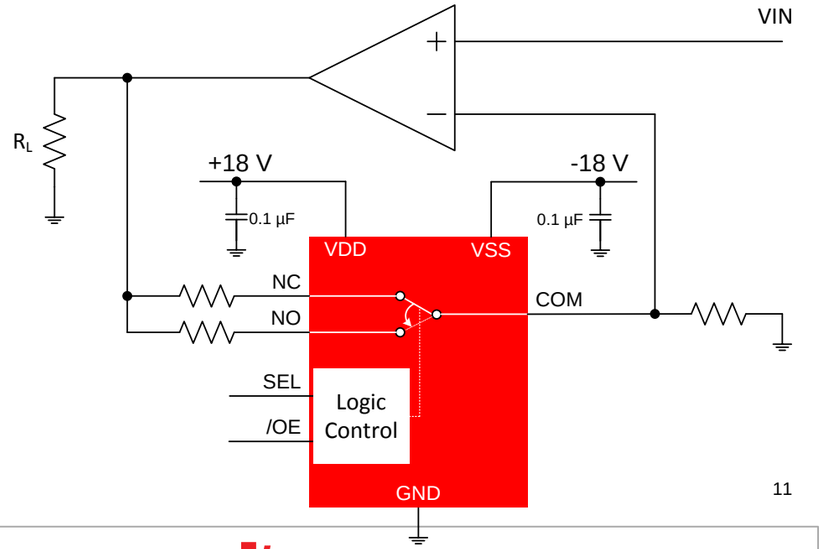

$R_{ON(FLATNESS)}$ impacts

$R_{ON(FLATNESS)}$ affects the fundamental shape of the waveform. Instead of a constant insertion loss through the switch, it changes with voltage.

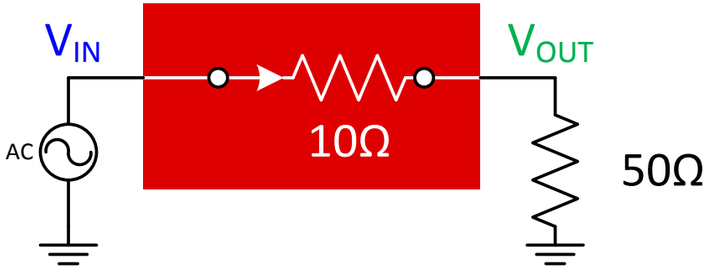

No R_{ON} flatness with constant insertion loss

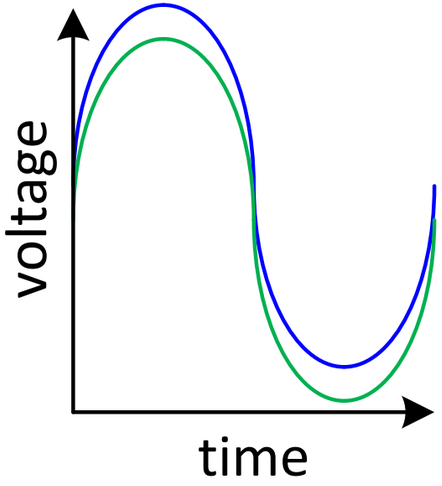

This causes THD+N

Lower V_{GS} increases R_{ON}. Larger insertion loss

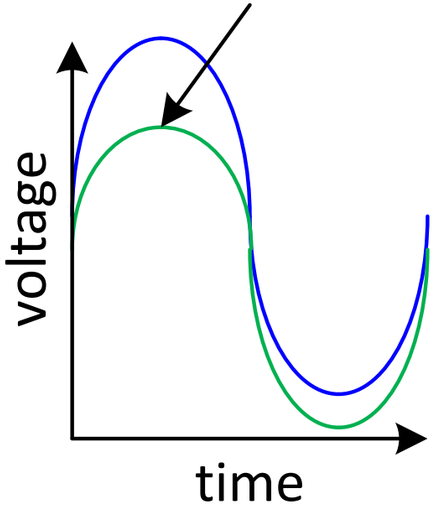

TECH DAYS Texas Instruments
Texas Instruments

$C_{ON/OFF}$

$$C \sim W_{channel} \longleftrightarrow r_{on} \sim \frac{1}{W_{channel}}$$

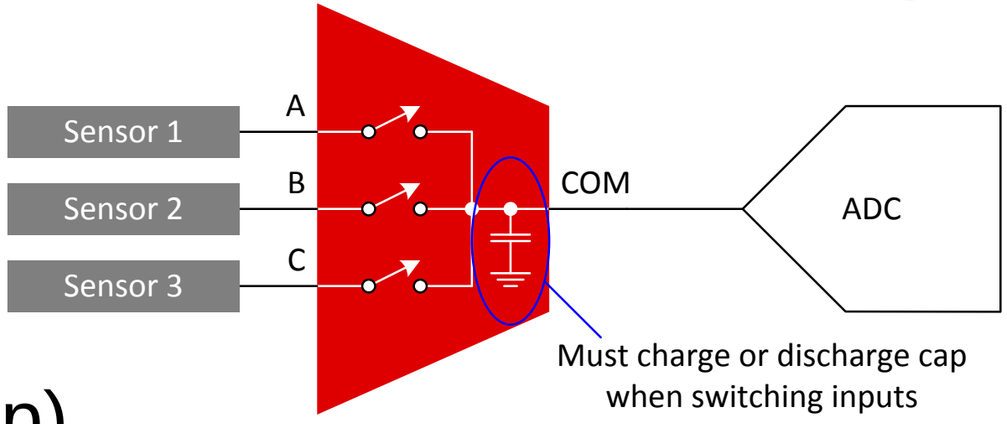

CON can impact the system in multiple ways:

- Increased settling time (~1 ns in this setup)
- Signal distortion

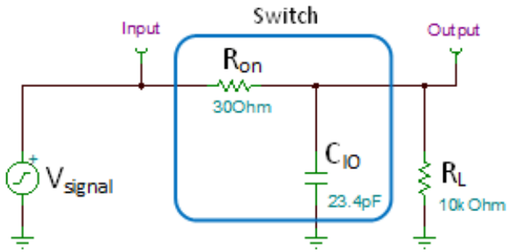

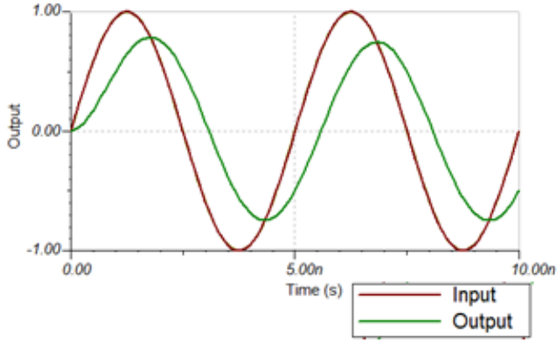

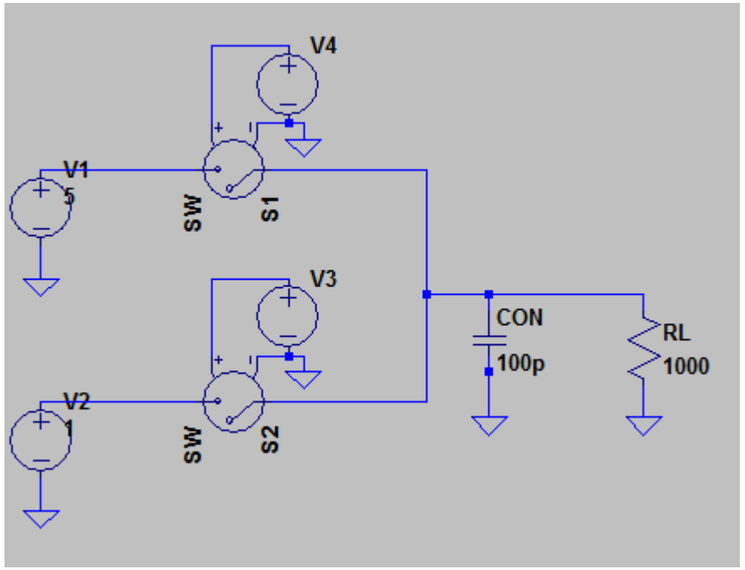

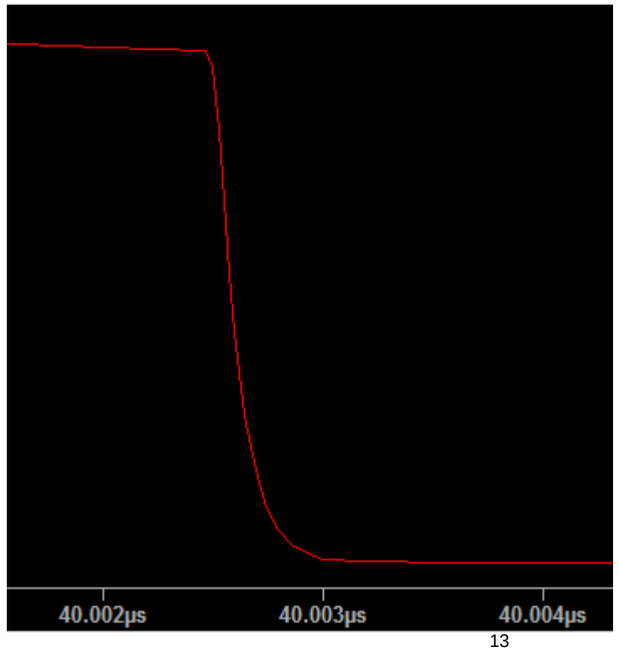

BW

- R_{ON} and C_{ON} combination give BW (Mainly C_{ON})

R_{ON}: 6 ohm

C_{ON}: 1.4 pF @ 240 MHz

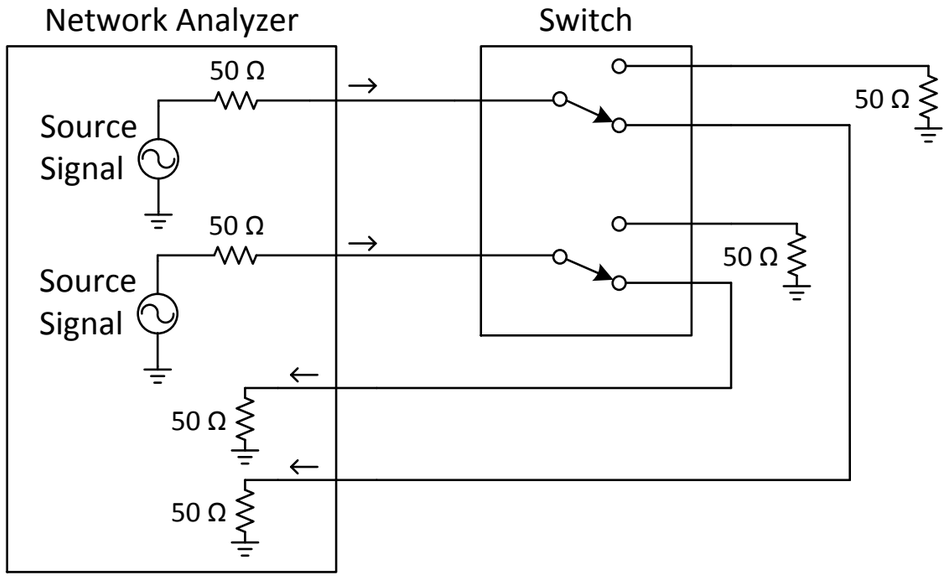

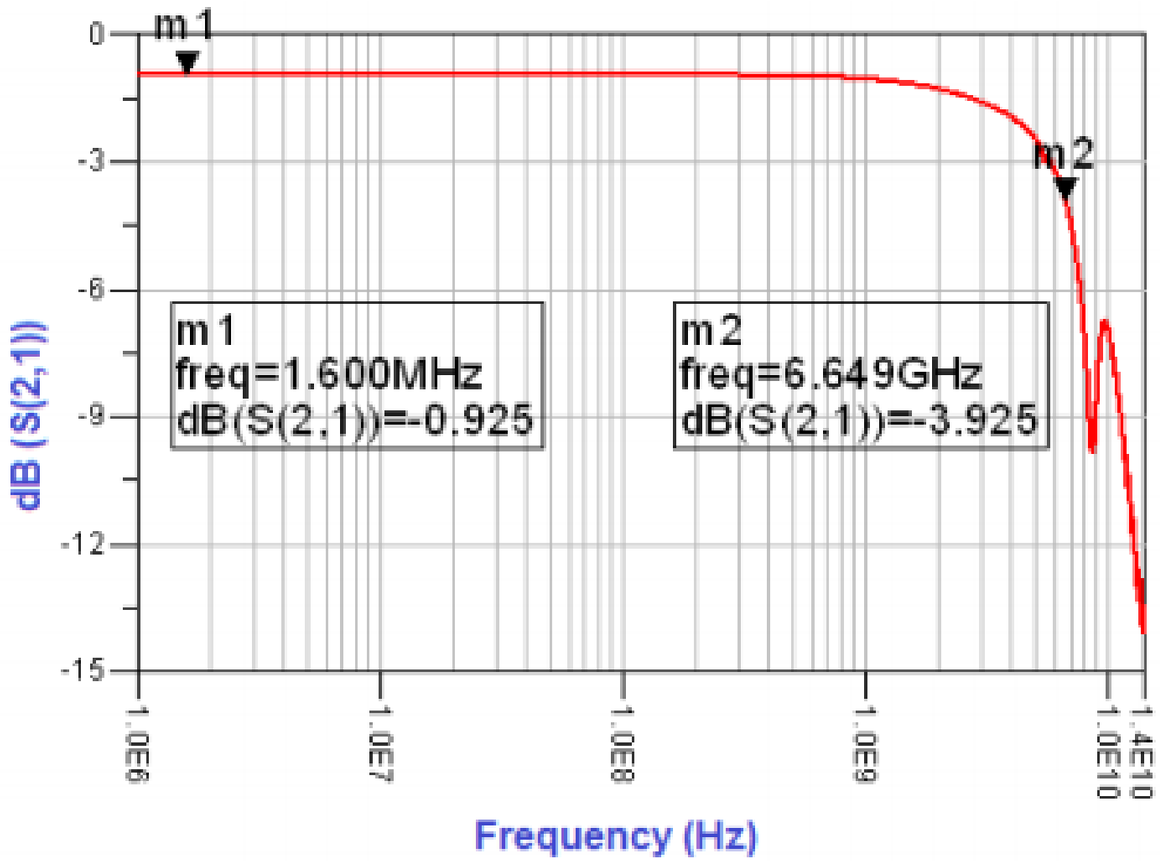

Charge Injection (Q_C)

Charge injection is caused by the coupling of the gate voltage on to the pin.

- The CGD and CGS of the FET are the contributors to this.
- This results in increased settling time for data acquisition applications as you must wait for the charge to dissipate before taking a measurement.

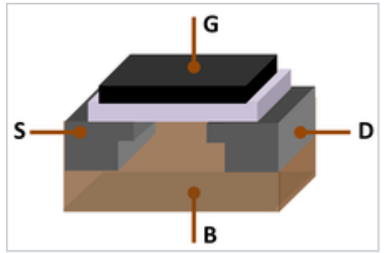

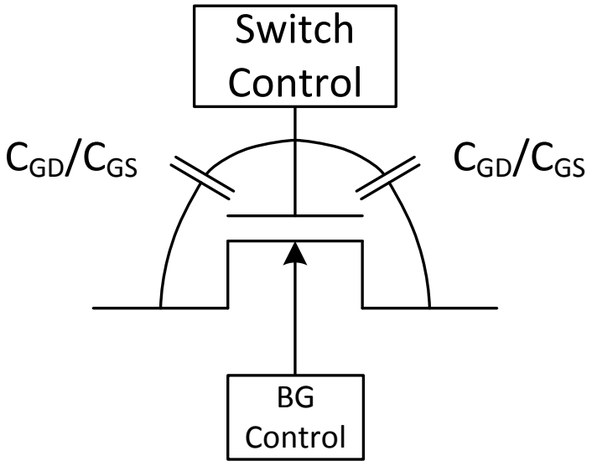

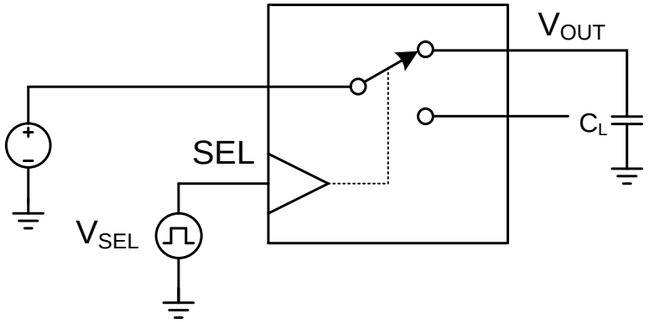

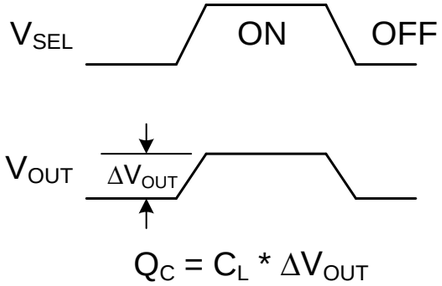

Leakage (I_{ON}/I_{OFF})

Leakage is a result of parasitic paths in a switch/mux

- ESD Cells
- Additional Features
- Well parasitics

Leakage goes both into the switch and out of the switch

- Leakage paths to both supply and ground

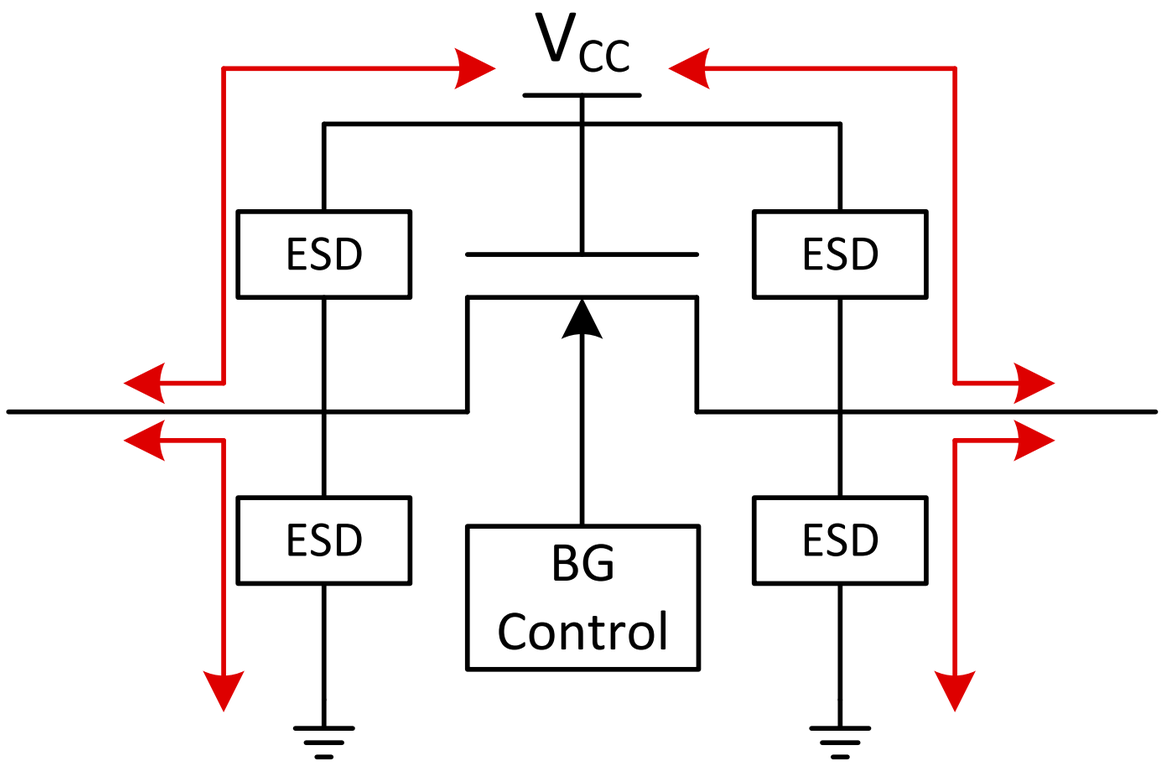

Leakage (I_{ON}/I_{OFF})

- In a precision impedance measurement application the leakage of the switch is added to the intended output current and offsets the feedback path.

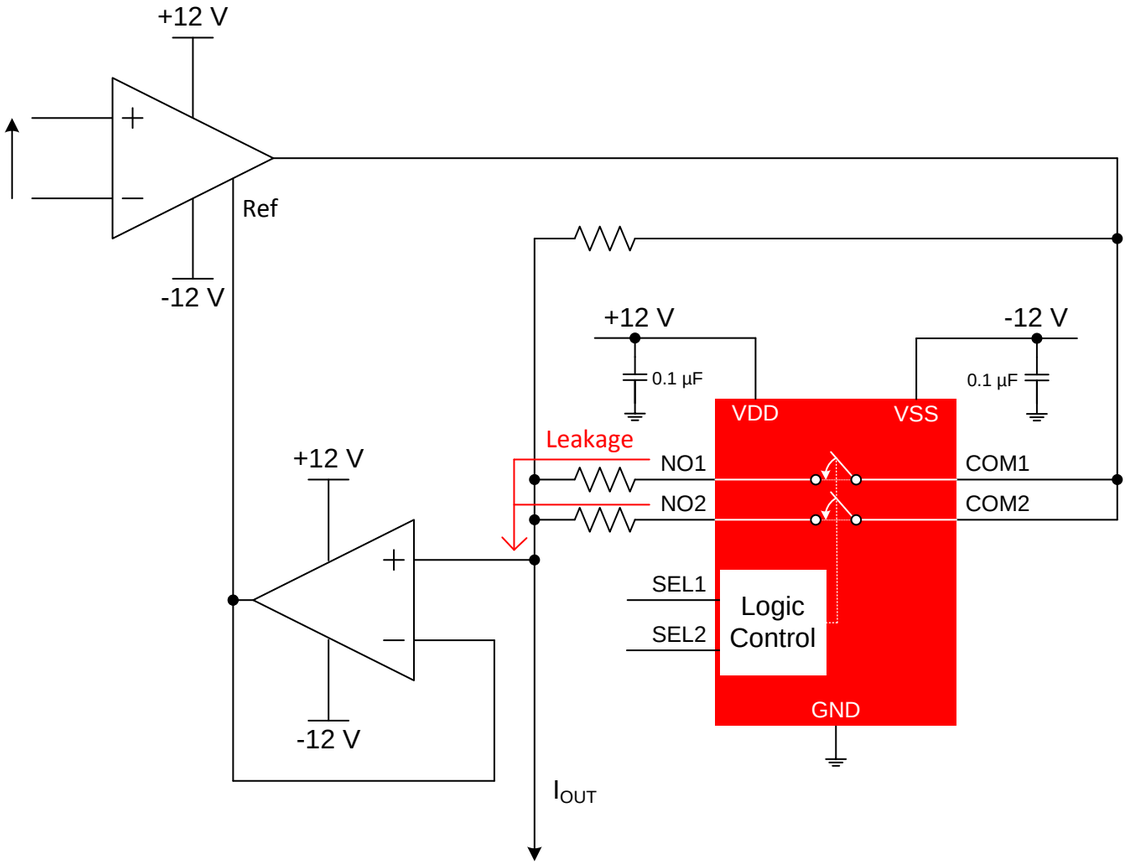

- From the datasheet of the temperature sensor below. The 4-20 mA current loop maintains an accuracy of 0.25 µA. Leakage must be kept low to avoid influencing the current sensor output.

- 1 µA of leakage adds 2 LSBs of noise

Design Features

The RTD Temperature Transmitter is a 4 to 20-mA current-loop reference design that supports RTD probes.

- Input Compatible with 2, 3, and 4-wire RTD Probes
- 4 to 20-mA current-loop signal output
- Low power consumption of 1.4 mA (with RTD biasing currents) is ideal for loop powered systems
- Output resolution: 0.25 µA
- Maximum measured error 0.11°C (–200°C to 200°C), 0.17°C (–200°C to 850°C)
- Power-supply influence of 0.3 µA from 10-30 V
- Temperature range for RTD –200°C to 850°C
- IEC61000-4-2: ESD: Air Discharge: ±8 kV Class A
- IEC61000-4-4: EFT ±2 kV Class A

t_{SWITCH} and t_{BBM}

- t_{SWITCH} sometimes referred to as t_{ON} or t_{ENABLE} depending on the datasheet and what features the part has. Read the datasheet to see what t_{ON} and t_{ENABLE} mean to make sure it describes what you are looking for.
- tBBM is an important feature or spec if your inputs/output don't play well. Can cause unwanted glitches and unexpected coupling without.
  - This item ensures that all the switches are in the off state before the next switch is turned on.

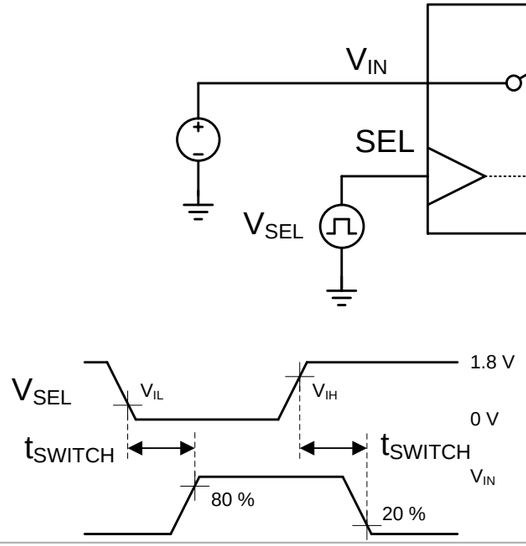

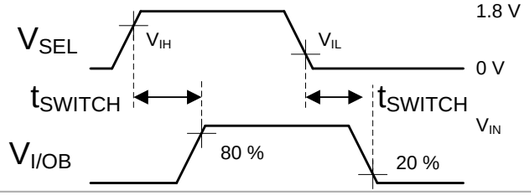

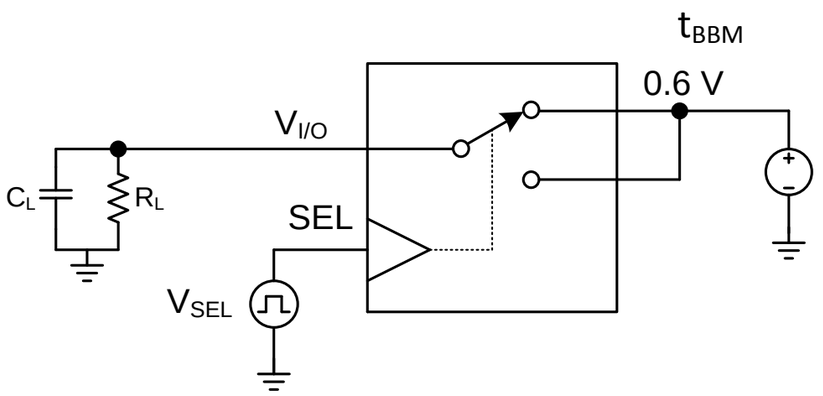

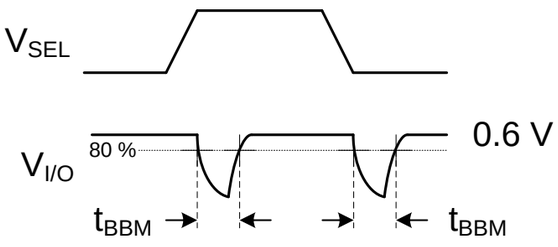

t_{SWITCH}

For TDD communication with GaN the transmitter is also the receiver. The faster the switch can be turned on and off the faster the switch between TX and RX can occur.

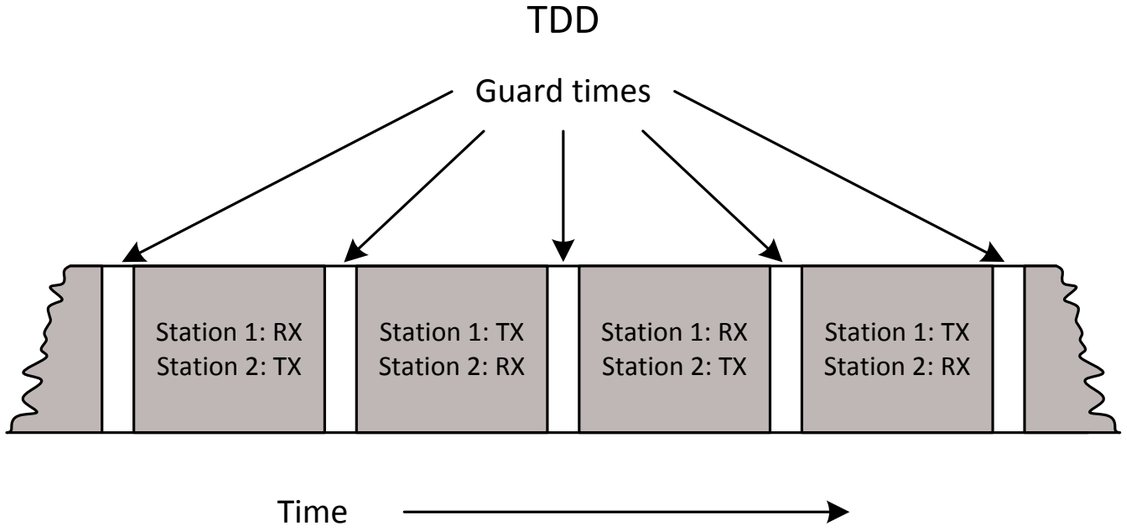

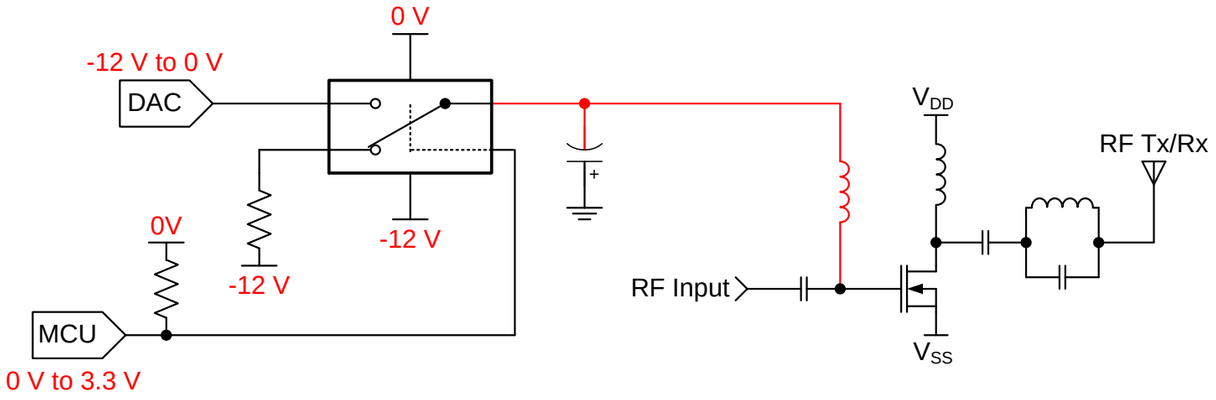

Texas Instruments

Switch features

Extra Switch features

- 1.8 V logic
  - Extra circuitry to allow for static thresholds.
    - Eliminates external translator
- Powered-off protection (Powered-off Isolation)
  - When VCC = 0V the I/Os are high-Z.
    - Eliminates power-sequencing requirement for the switch and isolates during power up sequences.
- Fault Protection
  - When Input exceeds a threshold the switch clamps or shuts off
- Latch-up immunity

Powered-off protection

- Isolation on power-up prevents damage.
- In TDD application it ensures the DAC is isolated on power-up making sure no garbage is transmitted.

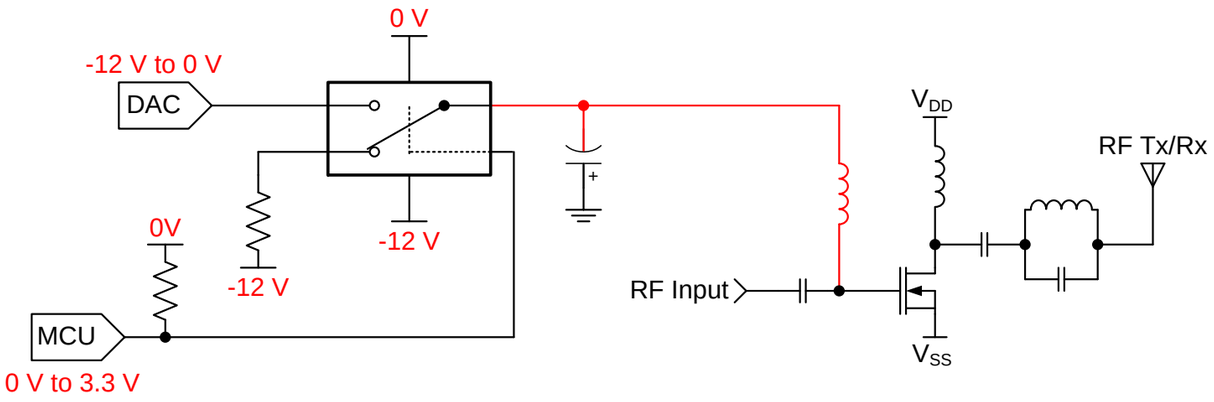

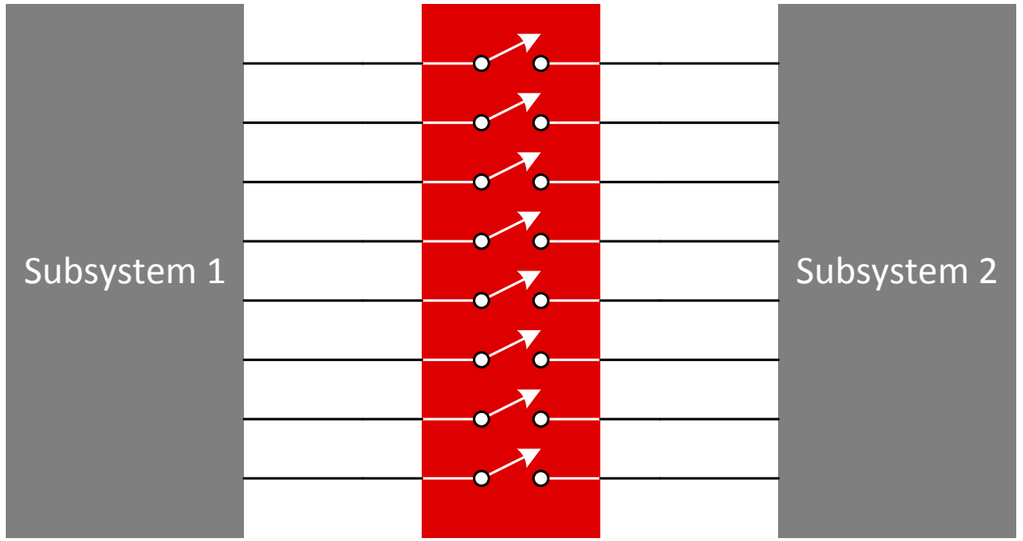

Switch architectures

Switch architectures

Simplest to most complex

- NFET
- Transmission gate
- Charge Pump
- Constant VGS

NFET

Pros:

- Simple
- Can be used as a translator if ESD I/O can go above supply

Cons:

- Switch turns off as signal I/O gets close to supply (V_{GS} must be > V_T)
- R_{ON} gets worse as signal I/O gets closer to supply (lower V_{GS})

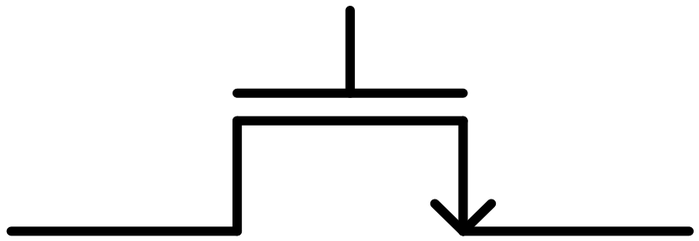

$$R_{on} = \frac{1}{\mu_n C_{ox} \frac{W}{L} (V_{GS} - V_{TH})}$$

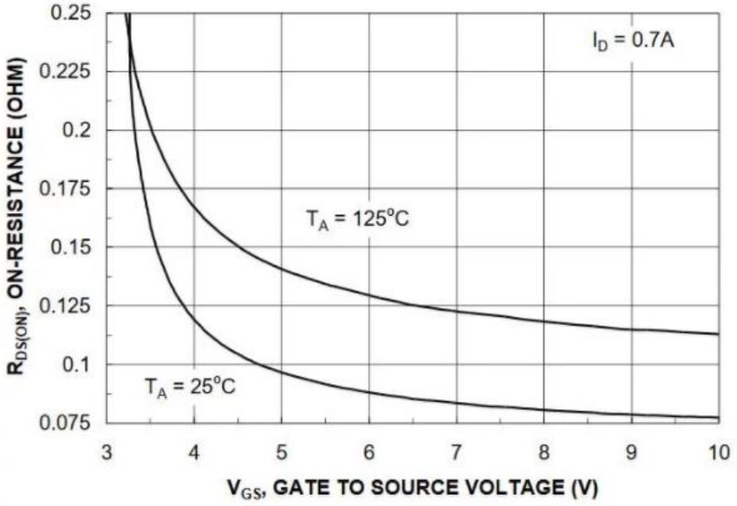

Transmission gate

Pros:

- Allows rail to rail operation
- Lowered R_{ON} compared to NFET only
- Can have better $R_{ON(FLATNESS)}$

Cons:

- More than double the cap typically
  - Depends on process but PFET can take 2-3 times the width to get same R_{ON} as NFET
- Extra circuitry needed to keep PFET off for powered-off protection

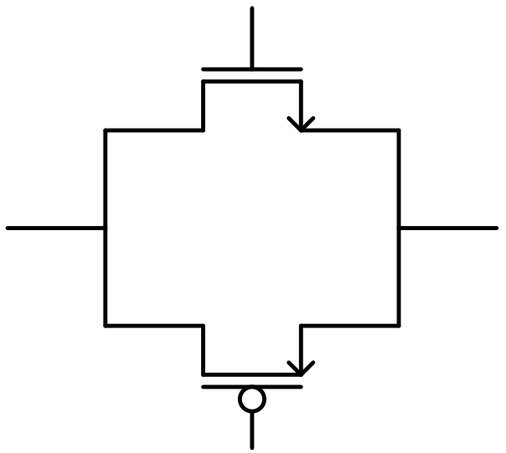

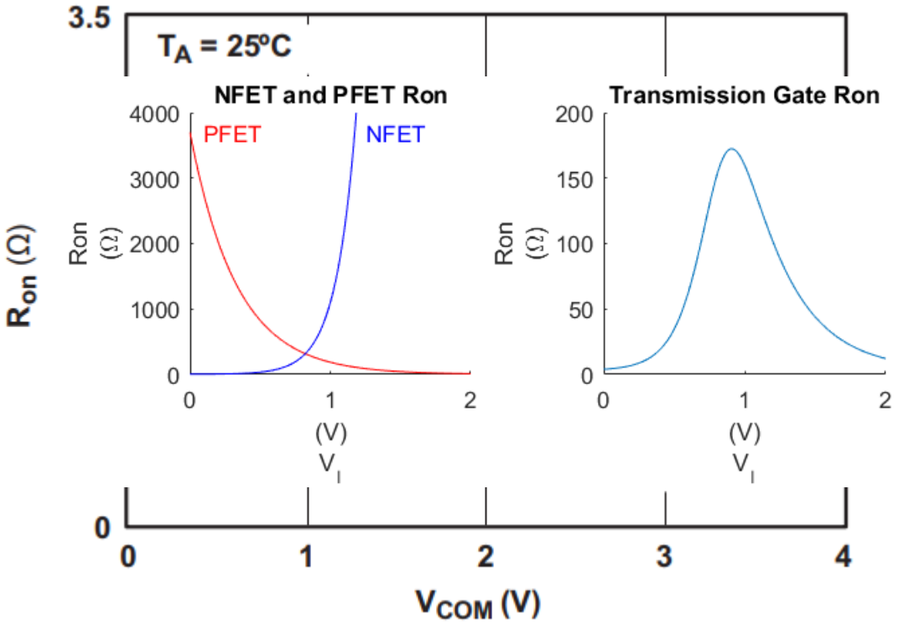

TECH DAYS Texas Instruments
Texas Instruments

Charge Pump

Pros:

- Can significantly bump up the V_{GS} for lowered R_{ON}
- Above the rails operation
- Removes the PFET capacitance
  - Much higher BW!

Cons:

- Higher Supply current
- Higher cost

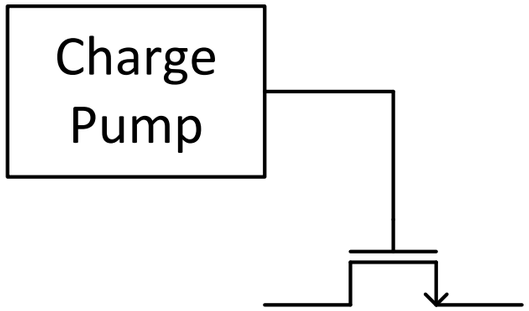

$$R_{on} = \frac{1}{\mu_n C_{ox} \frac{W}{L} (V_{GS} - V_{TH})}$$

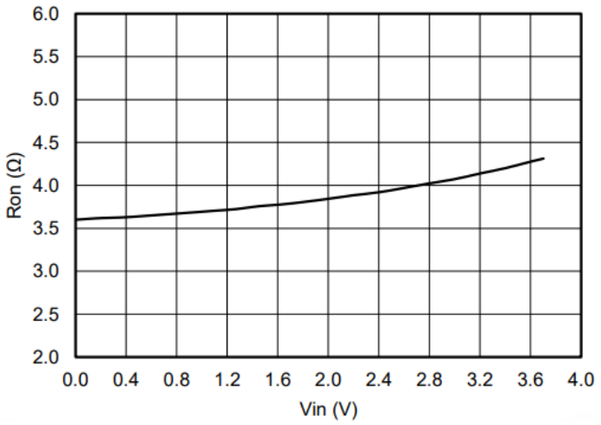

Figure 1. ON-Resistance vs $V_{I/O}$

Constant VGS

Pros:

- Can create a near 0 Ω $R_{ON(FLATNESS)}$

Cons:

- Higher current consumption
- Higher leakage current
- May lose rail to rail operation

$$R_{on} = \frac{1}{\mu_n C_{ox} \frac{W}{L} (V_{GS} - V_{TH})}$$

If VGS can be maintained at a constant level RON will not change with input voltage.
Gate voltage must change with input voltage.

Constant VGS

Method 1:

Inject current through a resistor onto the I/O pin.

- Simple and effective
- Can lose full rail to rail operation
- Has extra leakage

Method 2:

Use an amplifier to create a constant offset on the gate.

- Can lose rail to rail operation
- Doesn't introduce as much leakage
- Is BW limited and will have higher current consumption to support higher BW

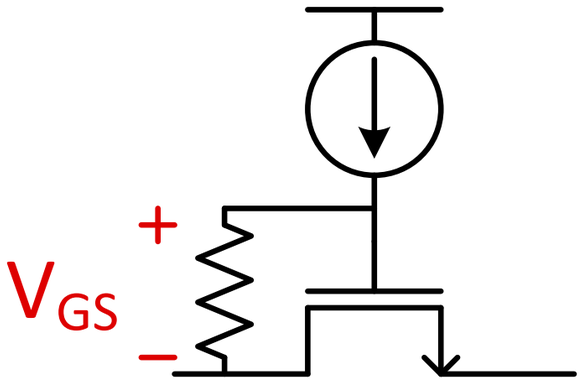

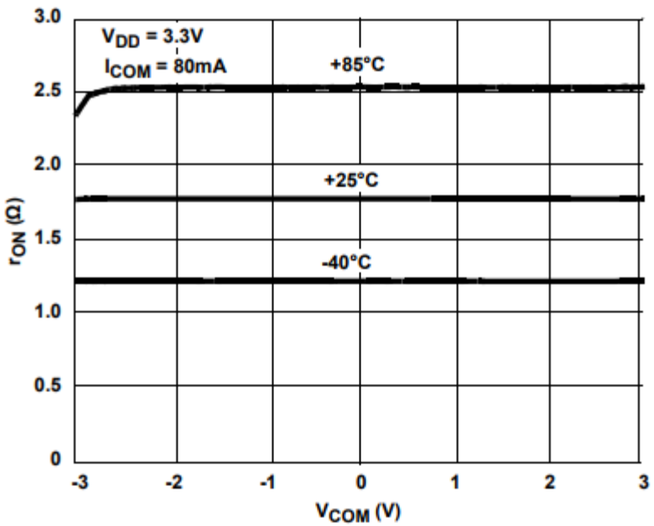

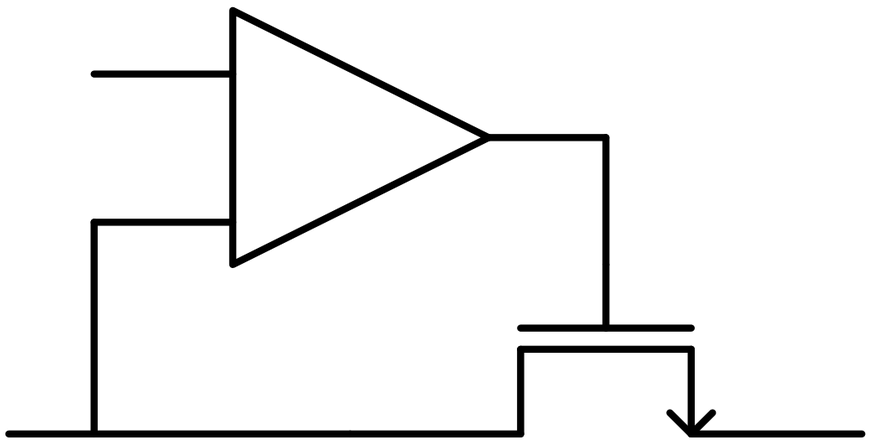

TECH DAYS Texas Instruments
Texas Instruments

©Copyright 2017 Texas Instruments Incorporated. All rights reserved.

This material is provided strictly “as-is,” for informational purposes only, and without any warranty.
Use of this material is subject to TI’s **Terms of Use**, viewable at TI.com