Bandwidth
TI Precision Labs – Op Amps

Developed by Art Kay, Pete Semig, and Tim Green

What is the Problem?

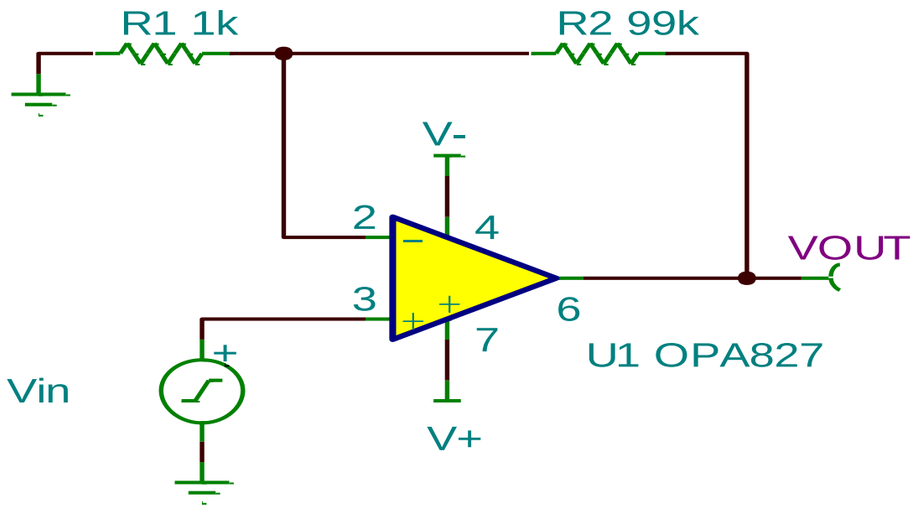

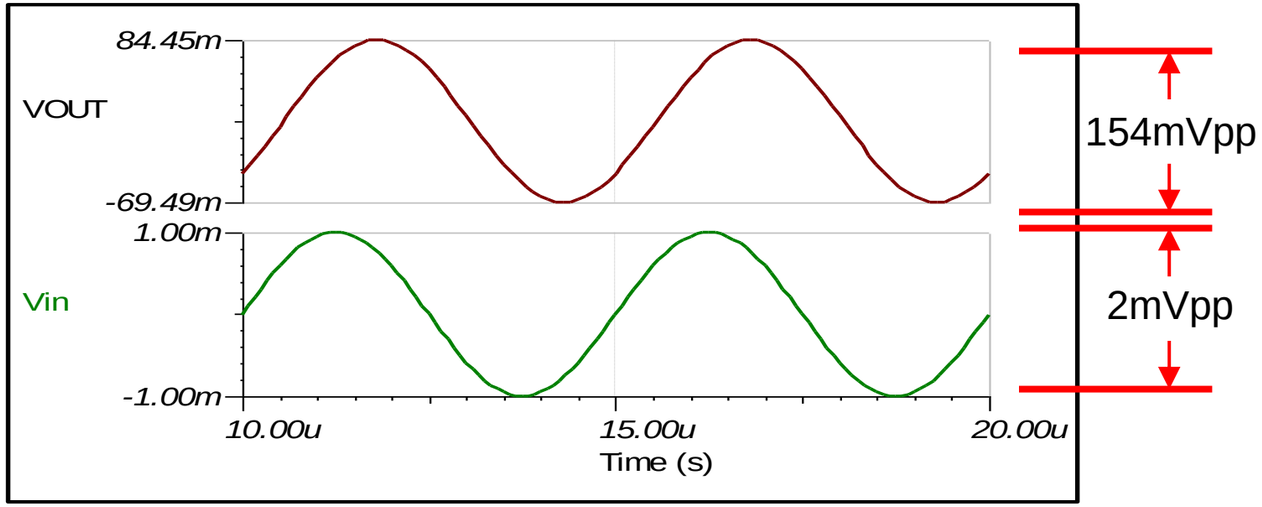

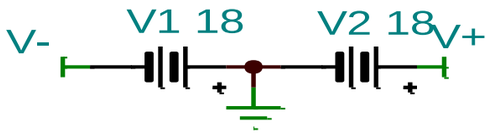

$$V_{in} = 2mV_{pp} \qquad G_{CL} = 1 + \frac{R_2}{R_1} = 1 + \frac{99k\Omega}{1k\Omega} = 100\frac{V}{V}$$

$$V_{out-calc} = V_{in} \times G_{CL} = 2mV_{pp} \times 100\frac{V}{V} = \boxed{200mV_{pp}}$$

$$V_{out-sim} = \boxed{154mV_{pp}}$$

Texas Instruments

Review: Gain, Linear vs. Decibel

Linear (V/V) to Decibels (dB)

$$G_{dB} = 20 \times \log(G_{V/V})$$

Example: Convert the closed-loop gain (G_{CL}) of an op amp circuit from 100V/V to decibels

Solution:

$$G_{CL(dB)} = 20 \times \log\left(100\frac{V}{V}\right) = 40dB$$

Decibels (dB) to Linear (V/V)

$$G_{V/V} = 10^{\left(\frac{G_{dB}}{20}\right)}$$

Example: Convert the open-loop gain (A_{OL}) range of the OPA188, 130dB, to V/V

Solution:

$$G_{A_{OL}@1Hz} = 10^{\left(\frac{130dB}{20}\right)} = 3{,}162{,}277\frac{V}{V}$$

$$G_{A_{OL}@2MHz} = 10^{\left(\frac{0dB}{20}\right)} = 1\frac{V}{V}$$

Will need to compute dB and Linear Gain for BW analysis

Bode Plots - Pole

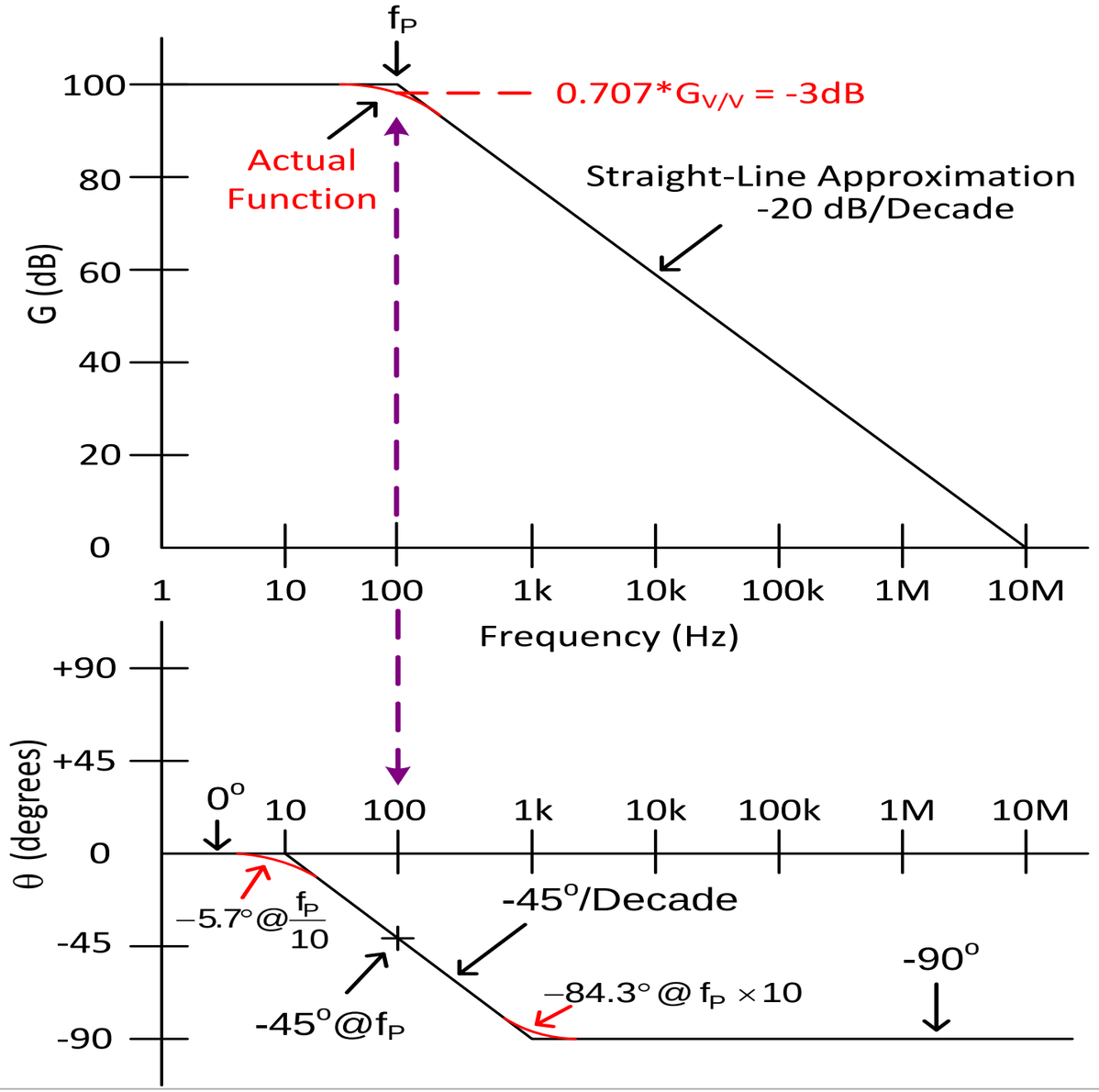

$$G_{v/v} = \frac{V_{out}}{V_{in}} = \frac{G_{dc}}{i\left(\frac{f}{f_P}\right) + 1}$$ As a complex number

$$G_{v/v} = \frac{V_{out}}{V_{in}} = \frac{G_{dc}}{\sqrt{\left(\frac{f}{f_P}\right)^2 + 1}}$$ Magnitude

$$\Theta = -\tan^{-1}\left(\frac{f}{f_P}\right)$$ Phase

$$G_{dB} = 20\mathrm{Log}(G_{v/v})$$ Magnitude in dB

- Pole Location = f_P (Cutoff Freq)
- Magnitude ($f < f_P$) = G_{dc} (e.g. 100dB)
- Magnitude ($f = f_P$) = -3dB
- Magnitude ($f > f_P$) = -20dB/Decade
- Phase ($f = f_P$) = -45°
- Phase ($0.1f_P < f < 10f_P$) = -45°/Decade
- Phase ($f > 10f_P$) = -90°
- Phase ($f < 0.1f_P$) = 0°

Texas Instruments

Bode Plots – Zero

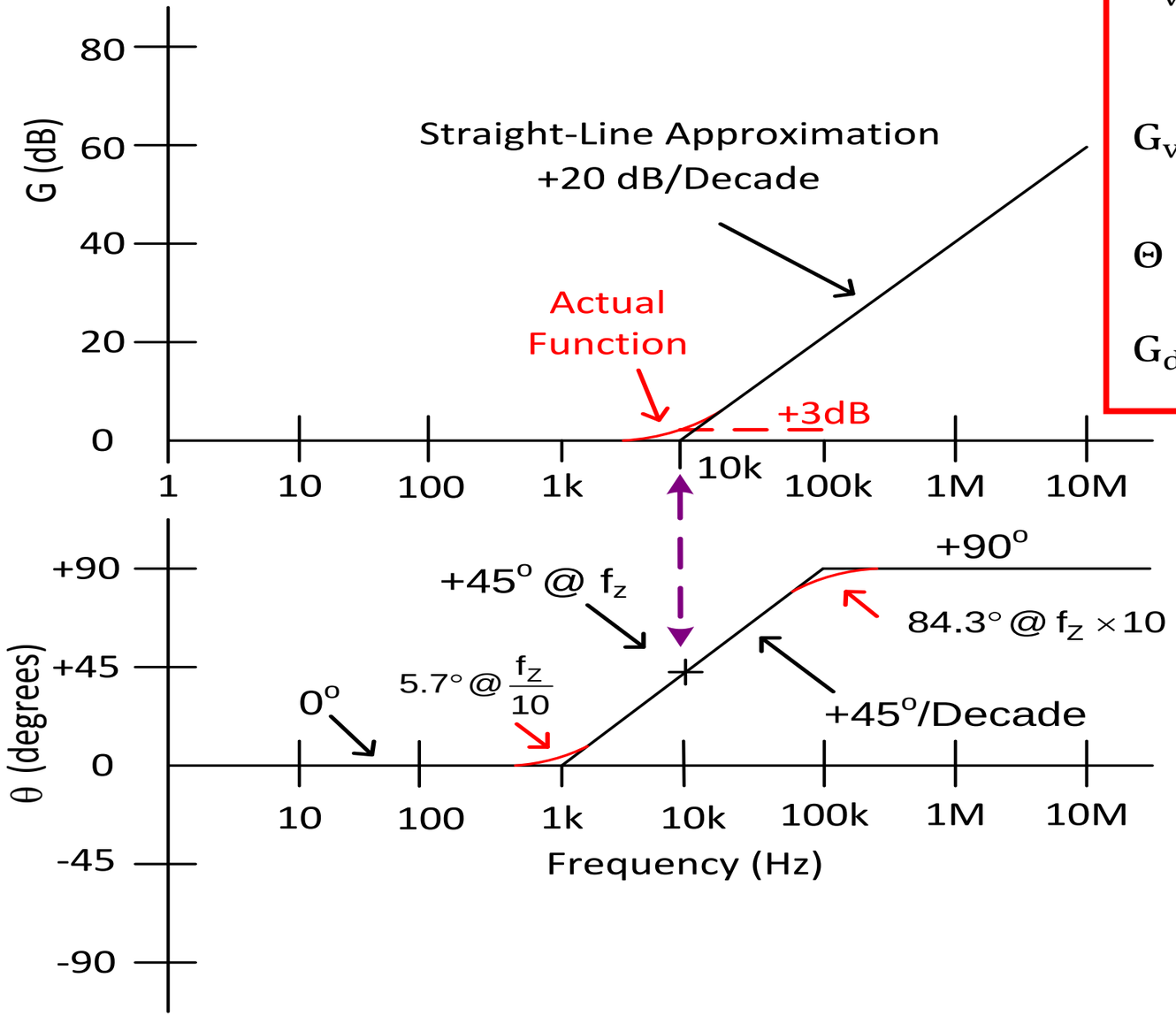

$$G_{v/v} = \frac{V_{out}}{V_{in}} = G_{dc}\left[i\left(\frac{f}{f_Z}\right) + 1\right]$$ As a complex number

$$G_{v/v} = \frac{V_{out}}{V_{in}} = G_{dc}\sqrt{\left(\frac{f}{f_Z}\right)^2 + 1}$$ Magnitude

$$\Theta = \tan^{-1}\left(\frac{f}{f_Z}\right)$$ Phase

$$G_{dB} = 20\mathrm{Log}(G_{v/v})$$ Magnitude in dB

- Zero Location = f_Z
- Magnitude ($f < f_Z$) = 0dB
- Magnitude ($f = f_Z$) = +3dB
- Magnitude ($f > f_Z$) = +20dB/Decade
- Phase ($f = f_Z$) = +45°
- Phase ($0.1f_Z < f < 10f_Z$) = +45°/Decade
- Phase ($f > 10f_Z$) = +90°
- Phase ($f < 0.1f_Z$) = 0°

Texas Instruments

Bandwidth Defined

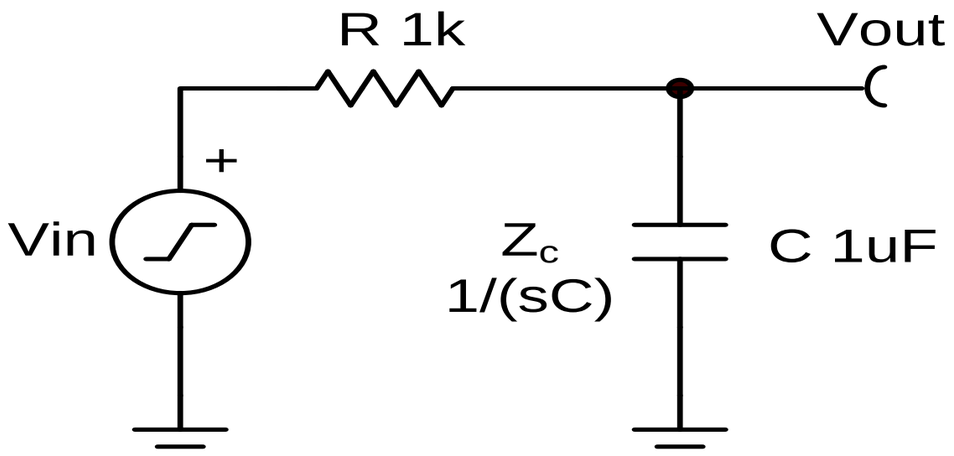

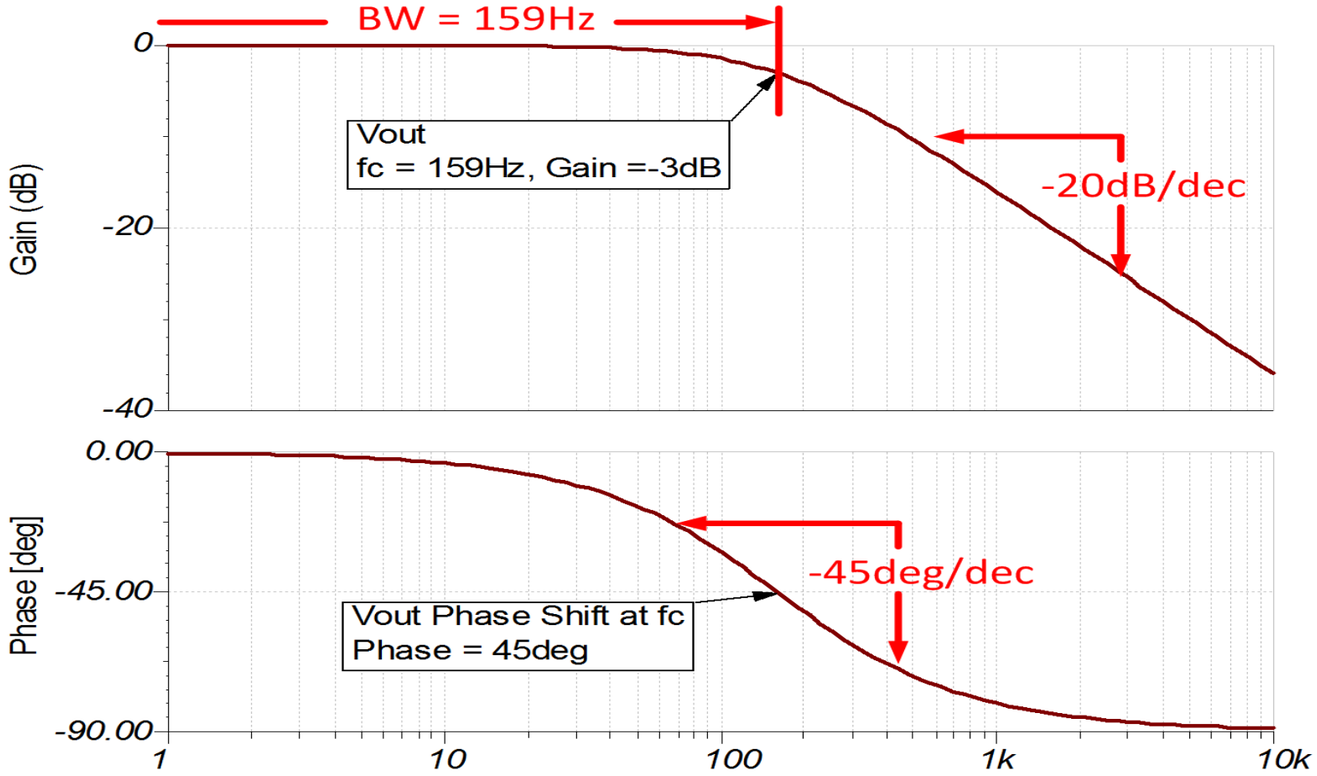

Cutoff Frequency, f_C:
Pass band gain is down -3dB at the cutoff frequency f_C
Phase is shifted by -45deg at the cutoff frequency

Bandwidth, BW:
The frequency range of the pass band (equal to the cutoff frequency in this case).

Texas Instruments

Bode Plot to Time Domain – Gain

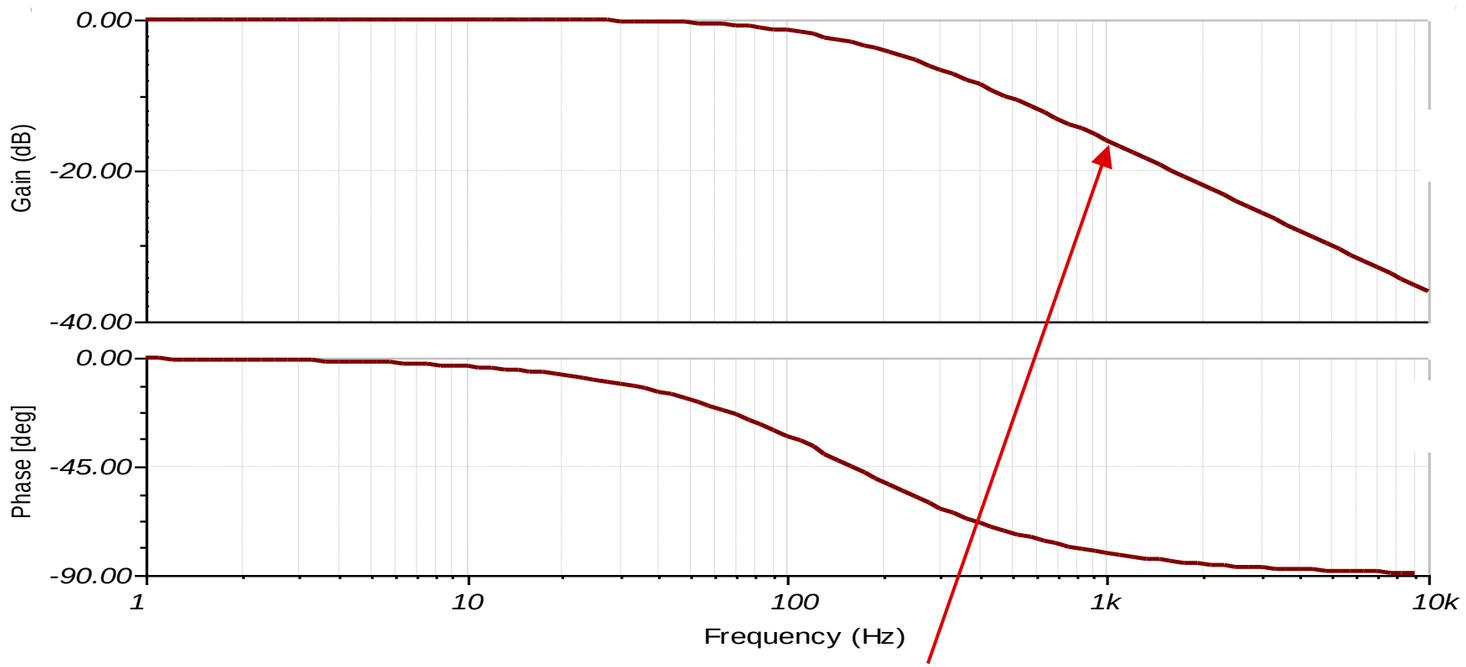

1kHz, -16dB

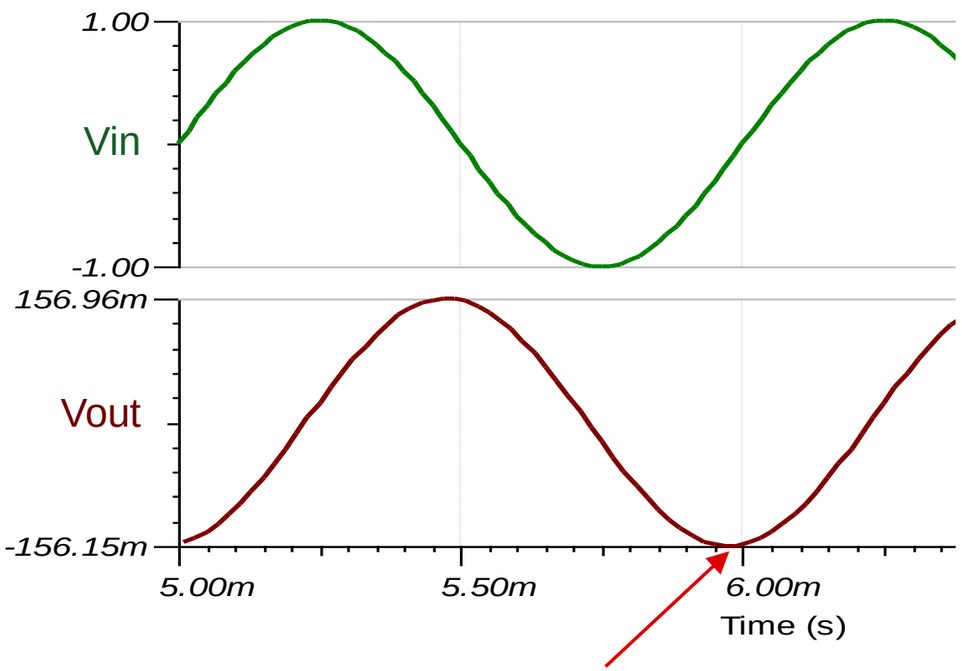

156mVpk

$$\text{Gain}_{\text{V/V}} = 10^{\left(\frac{-16\text{dB}}{20}\right)} = 0.16\,\text{V/V}$$

$$\text{V}_{\text{out}} = \text{V}_{\text{in}} * \text{Gain}_{\text{V/V}} = 1\text{V}_{\text{pk}} * 0.16\,\text{V/V} = \mathbf{160mV_{pk}}$$

Texas Instruments

Bode Plot to Time Domain – Phase

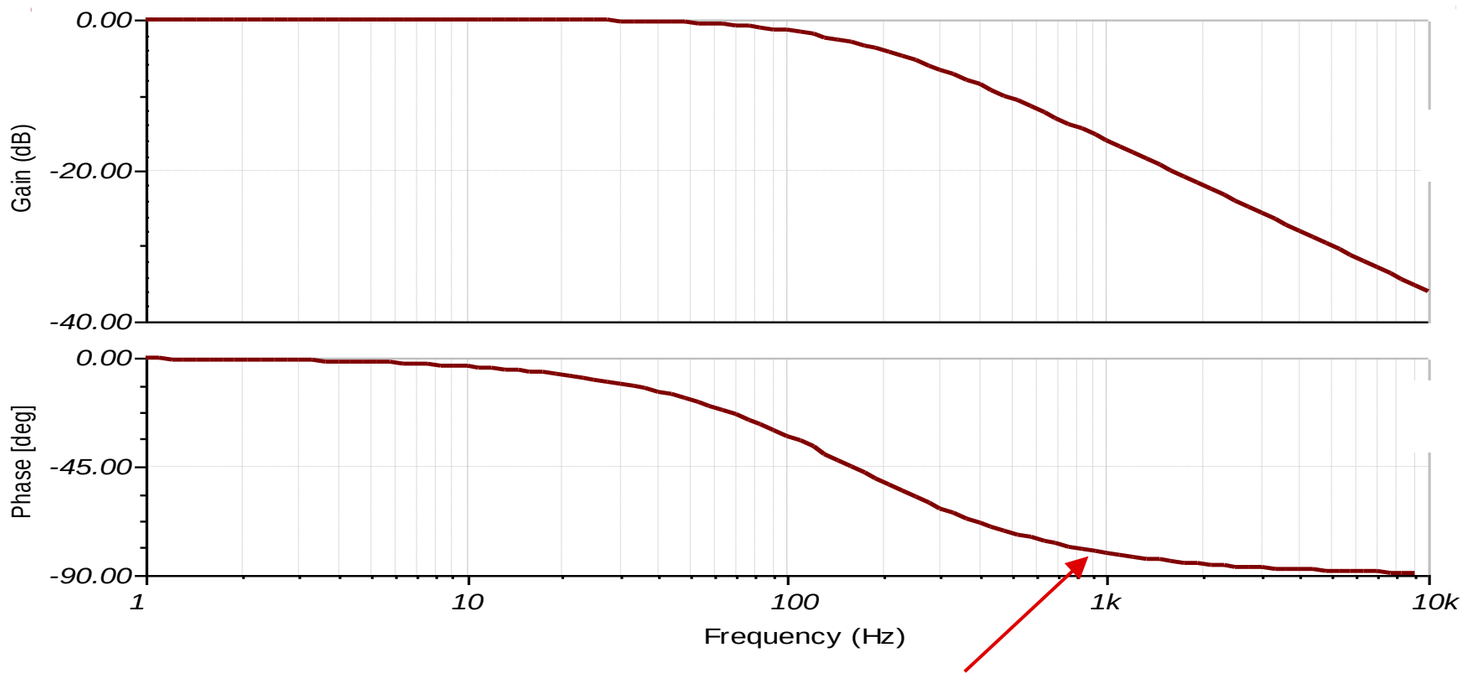

1kHz, -81° phase shift

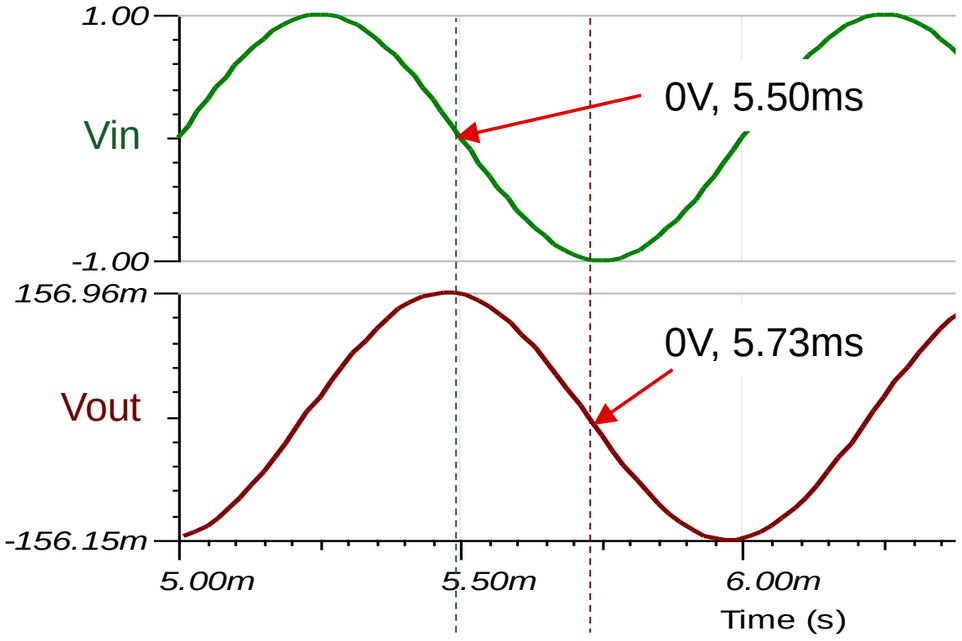

Time delay = 0.23ms

$$T = \frac{1}{f} = \frac{1}{1\text{kHz}} = 1\text{ms}$$

Period of sinewave

$$t = \left(\frac{\Theta}{360°}\right) * T = \left(\frac{81°}{360°}\right) * 1\text{ms} = \mathbf{0.23ms}$$

One Period = 360°

Texas Instruments

Gain Bandwidth Product

PARAMETER		CONDITIONS	OPA827AI MIN	OPA827AI TYP	OPA827AI MAX	UNIT
FREQUENCY RESPONSE						
Gain-Bandwidth Product	GBW	G = +1		22		MHz
OPEN-LOOP GAIN						
Open-Loop Voltage Gain	A_{OL}	$(V-)+3V \le V_O \le (V+)-3V$, $R_L = 1k\Omega$	120	126		dB

$$GBW = Gain \cdot BW$$

In this example, for any gain from 0dB to A_{OL}

where
GBW -- Gain Bandwidth in Hz
Gain -- closed loop voltage gain
BW -- Bandwidth in Hz

For example

$$Gain = 100\,V/V$$

Closed Loop Bandwidth is calculated:

$$BW = \frac{GBW}{Gain} = \frac{22MHz}{100} = 220kHz$$

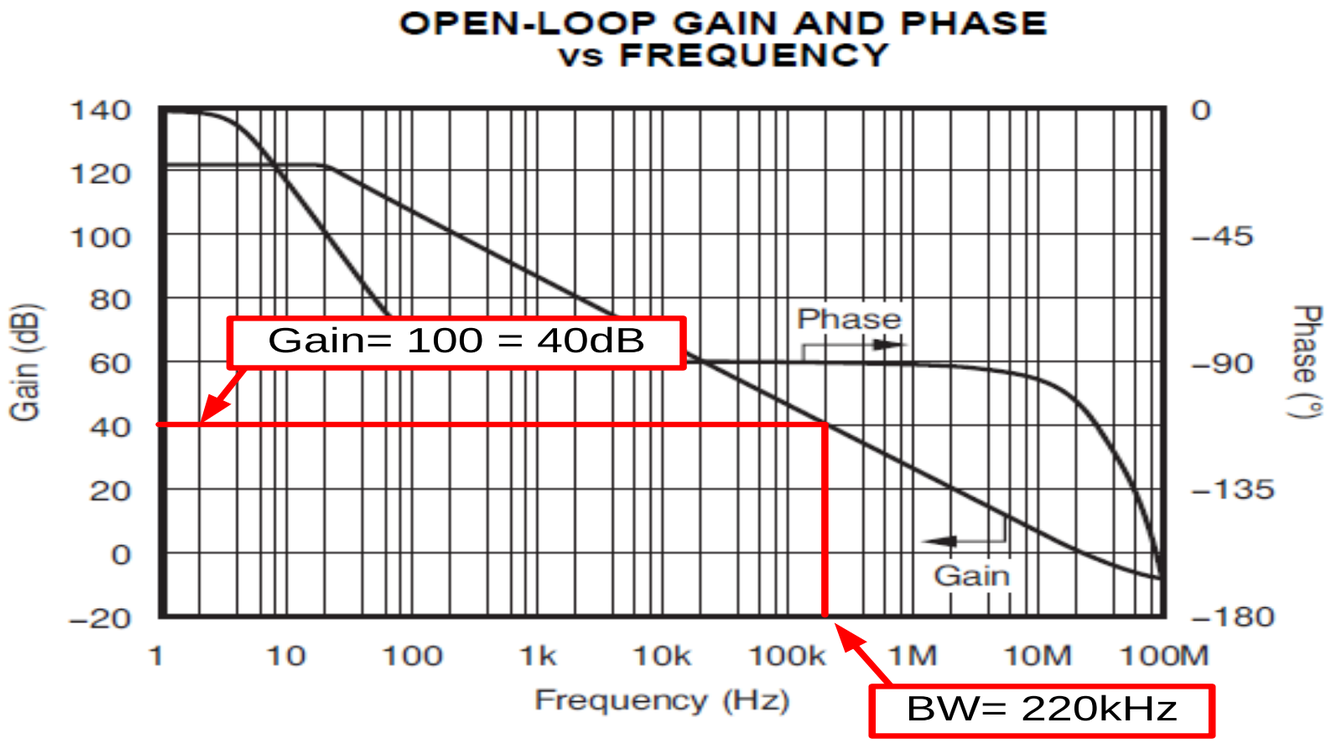

Simulation Matches Calculation

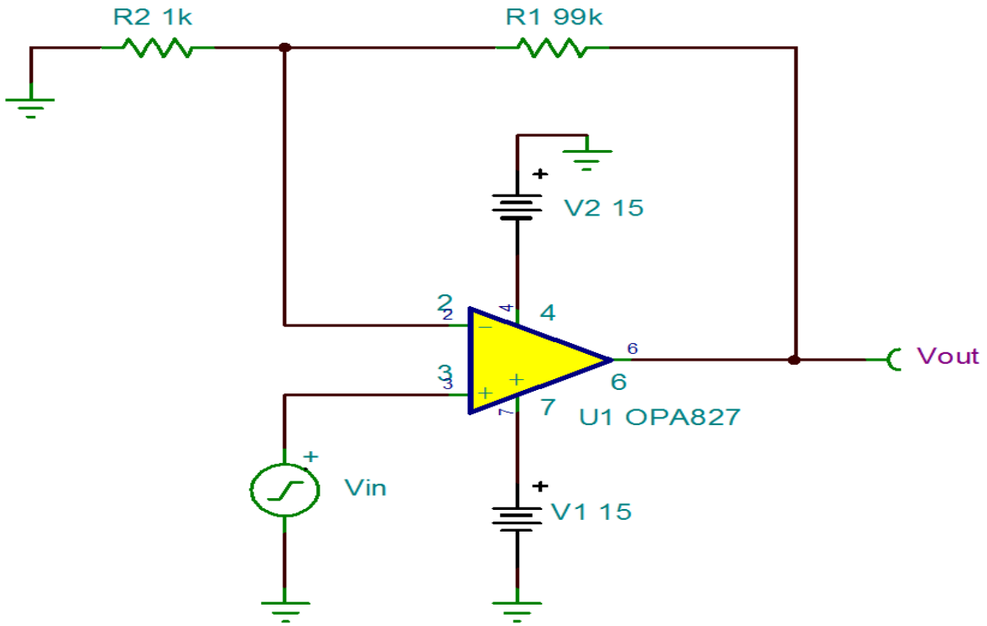

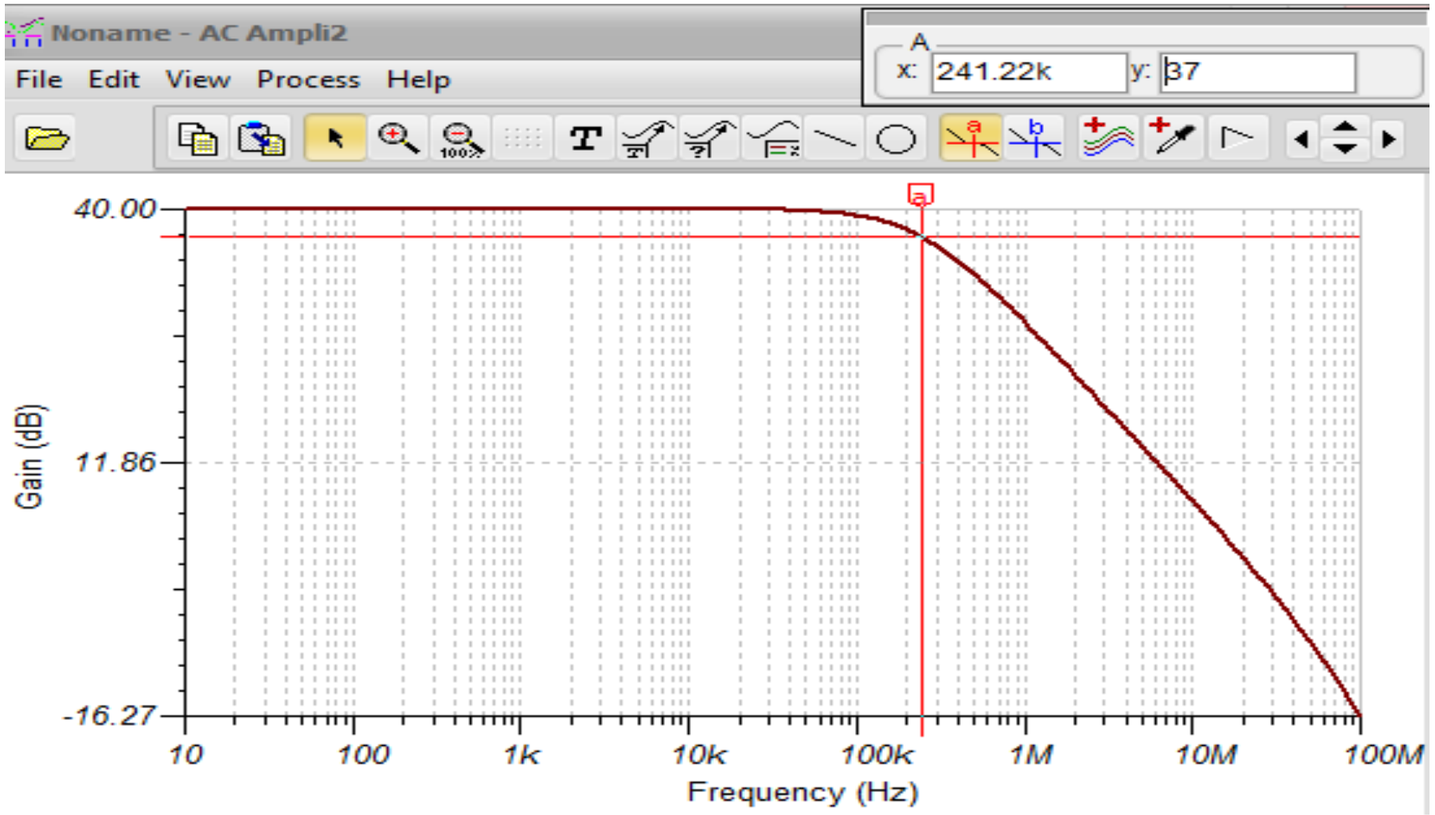

Bandwidth (Calculated)	Bandwidth (Simulated)
220 kHz	241 kHz

Texas Instruments

Dominant Pole

PARAMETER		CONDITIONS	OPA827AI MIN	OPA827AI TYP	OPA827AI MAX	UNIT
FREQUENCY RESPONSE						
Gain-Bandwidth Product	GBW	G = +1		22		MHz
OPEN-LOOP GAIN						
Open-Loop Voltage Gain	A_{OL}	$(V-)+3V \le V_O \le (V+)-3V$, $R_L = 1k\Omega$	120	126		dB

$$\text{Dominant_Pole} = \frac{GBW}{A_{OL}}$$

where
Dominant_Pole -- low frequency pole in Aol curve
GBW -- Gain Bandwidth in Hz
BW -- Bandwidth in Hz

$$A_{OL} = 10^{\frac{126}{20}} = 1.995 \times 10^6 \text{ V/V}$$

$$\text{Dominant_Pole} = \frac{GBW}{A_{OL}} = \frac{22\text{MHz}}{1.995 \times 10^6} = 11.03\text{Hz}$$

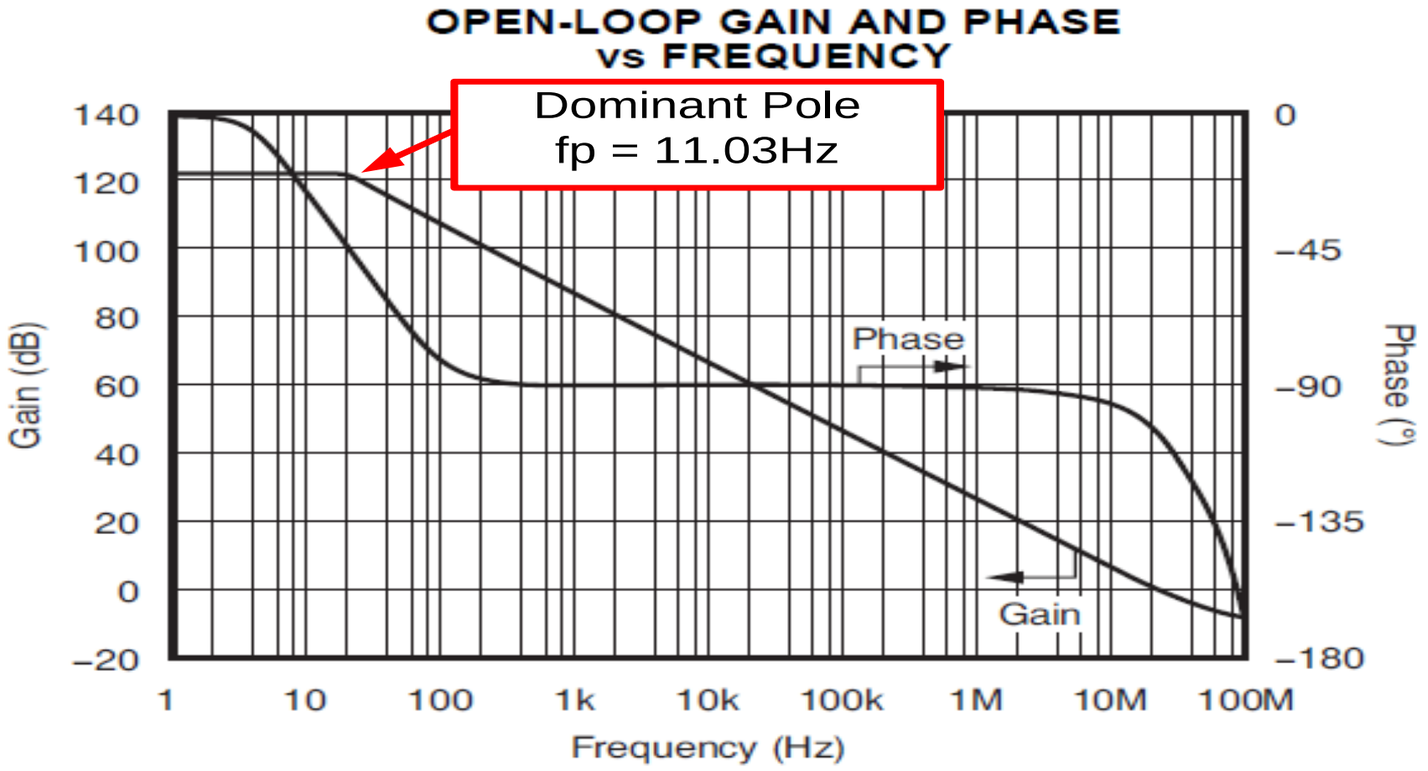

Constant Gain Bandwidth Product

PARAMETER		CONDITIONS	STANDARD GRADE OPA827AI			HIGH GRADE OPA827I[1][2]			UNIT
			MIN	TYP	MAX	MIN	TYP	MAX	
FREQUENCY RESPONSE									
Gain-Bandwidth Product	GBW	G = +1		22			22		MHz

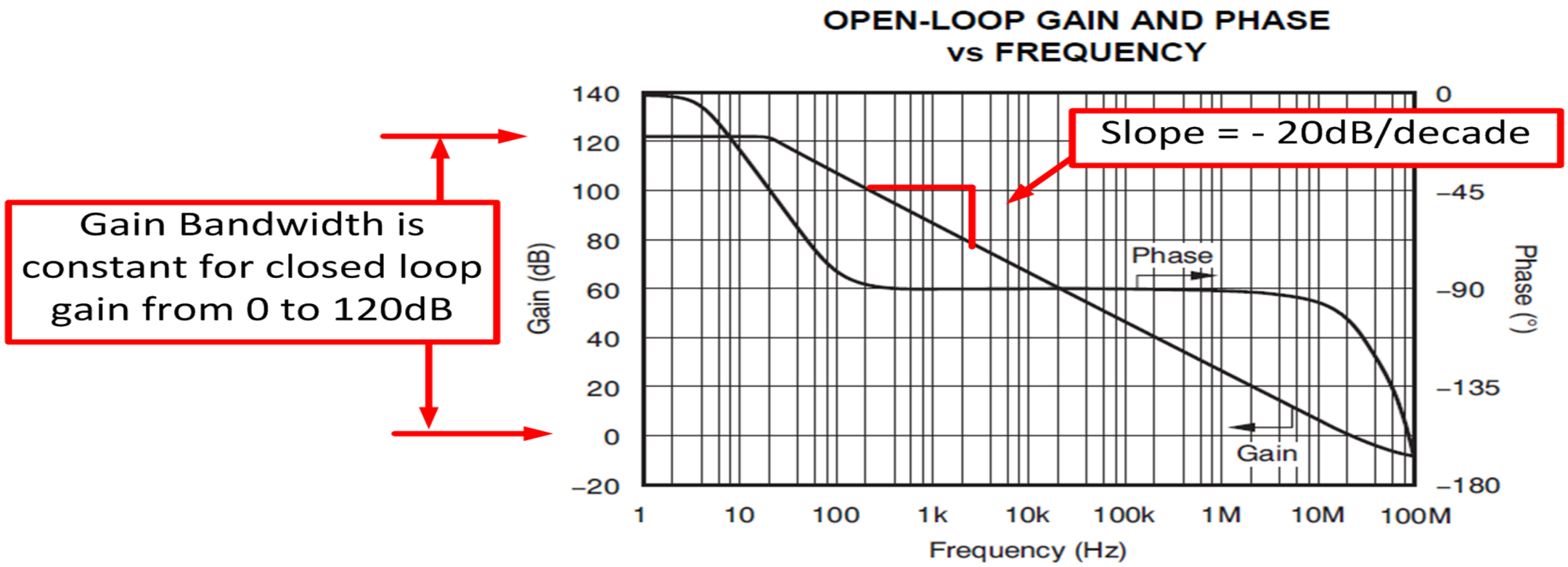

BW = GBW/Gain only works for -20dB/decade

Variable Gain Bandwidth Product

PARAMETER	CONDITIONS	OPA847ID, IDBV					
		TYP	MIN/MAX OVER TEMPERATURE				
		+25°C	+25°C(1)	0°C to 70°C(2)	−40°C to +85°C(2)	UNITS	MIN/ MAX
AC PERFORMANCE (see Figure 1)							
Closed-Loop Bandwidth	G = +12, R_G = 39.2Ω, V_O = 200mV_{PP}	600				MHz	typ
	G = +20, R_G = 39.2Ω, V_O = 200mV_{PP}	350	230	210	195	MHz	min
	G = +50, R_G = 39.2Ω, V_O = 200mV_{PP}	78	63	60	57	MHz	min
Gain Bandwidth Product (GBP)	G ≥ +50	3900	3100	3000	2800	MHz	min

Gain x Bandwidth =	12 x 600MHz =	7200MHz
Gain x Bandwidth =	20 x 350MHz =	7000MHz
Gain x Bandwidth =	50 x 78MHz =	3900MHz
Gain x Bandwidth =	100 x 39MHz =	3900MHz
Gain x Bandwidth =	500 x 7.8MHz =	3900MHz
Gain x Bandwidth =	1000 x 3.9MHz =	3900MHz

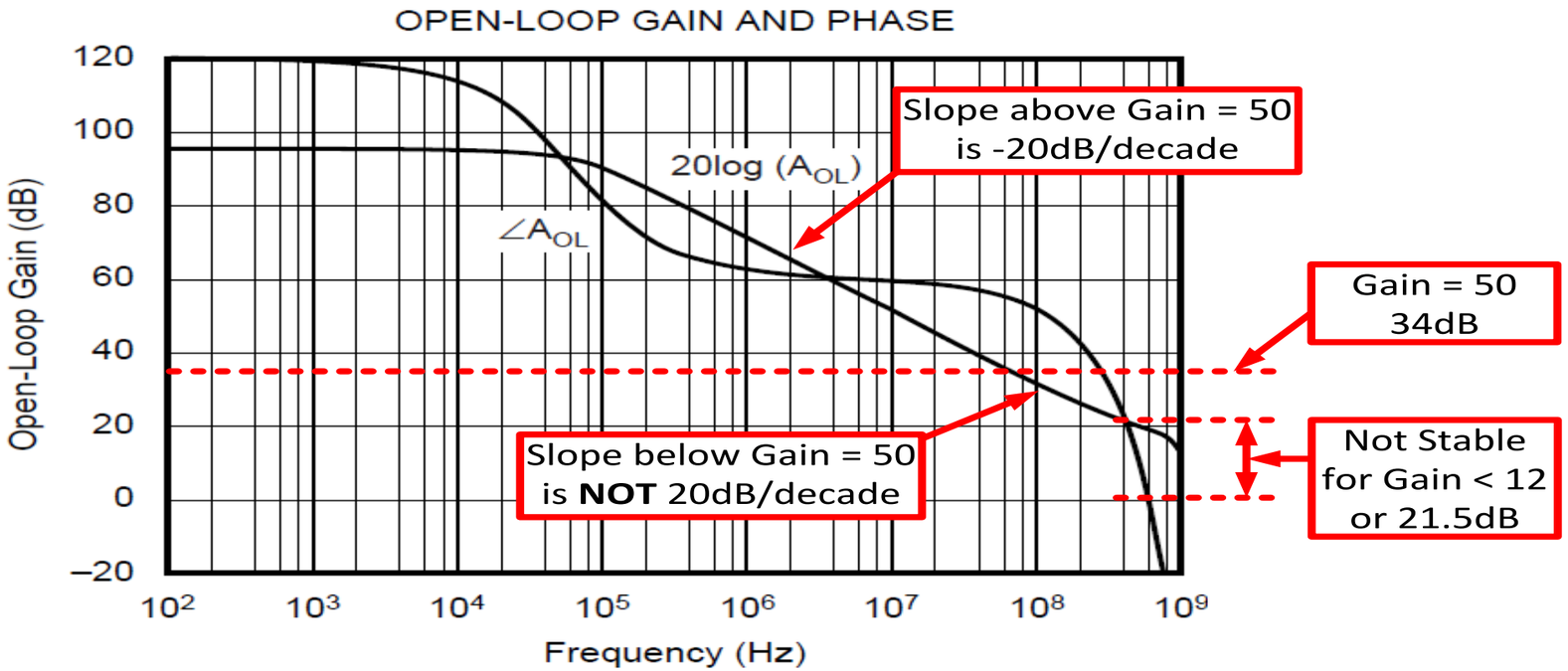

Bandwidth vs. Circuit Configuration

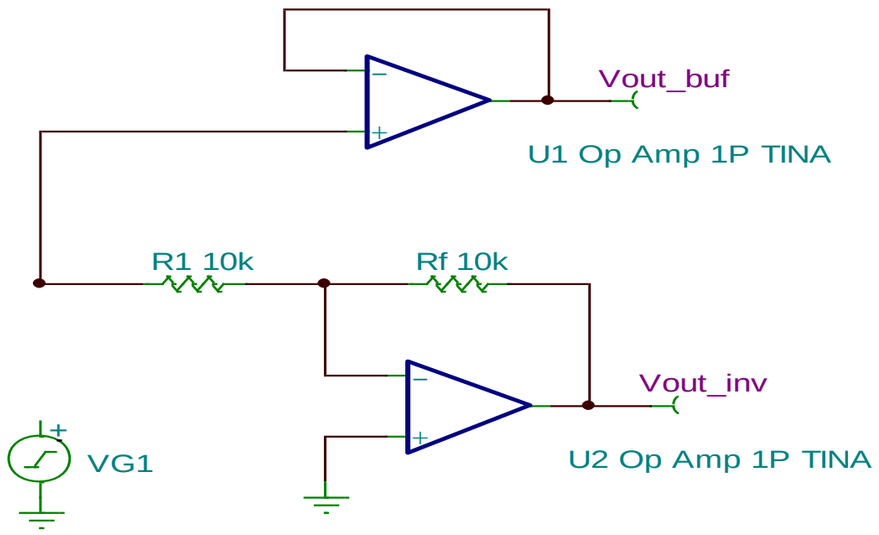

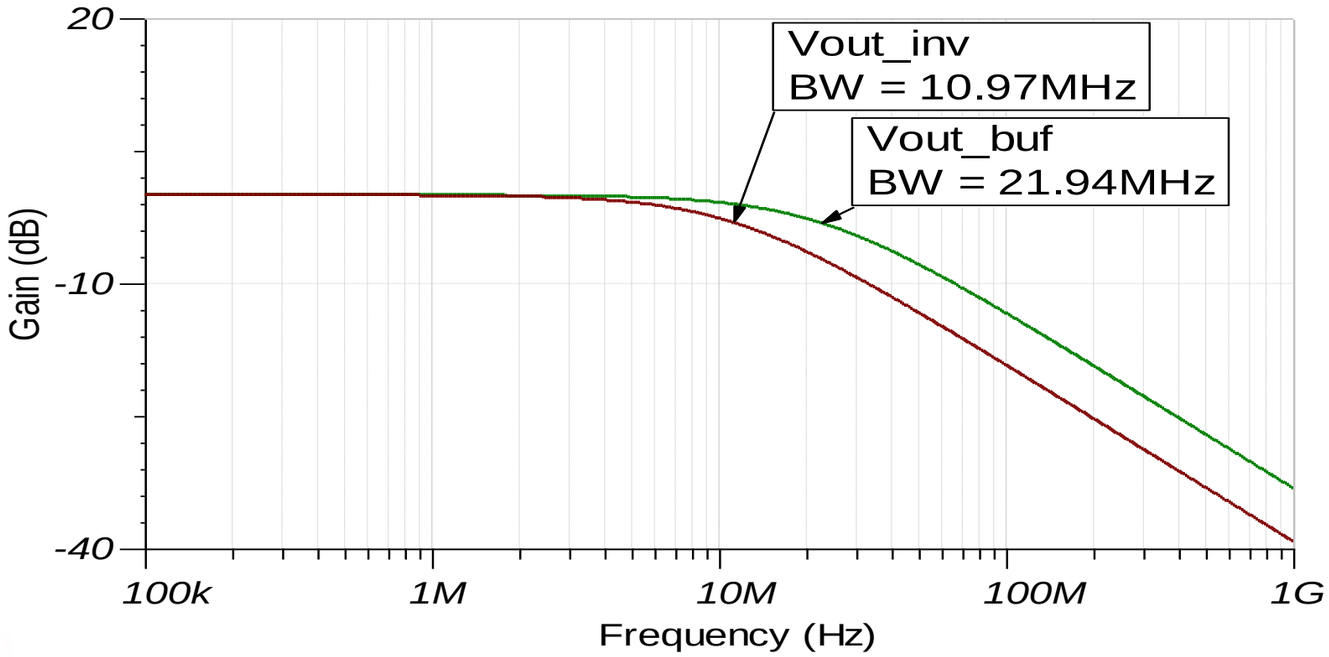

For Inverting Amp

$G_{CL} = -1$

Non_Inv_Gain = 2

$$BW = \frac{GBW}{Non_Inv_Gain} = \frac{22MHz}{2} = 11MHz$$

BW_Simulated = 10.97MHz

For Buffer

$G_{CL} = 1$

Non_Inv_Gain = 1

$$BW = \frac{GBW}{Non_Inv_Gain} = \frac{22MHz}{1} = 22MHz$$

BW_Simulated = 21.94MHz

Always use non-Inverting gain when calculating bandwidth!

Will cover in Stability Section why this is true.

Bandwidth vs. I_Q

Op Amp	Typical GBW	Typical I_Q
OPA369	12kHz	0.8µA
OPA333	350kHz	17µA
OPA277	1MHz	790µA
OPA129	1MHz	1.2mA
OPA827	22MHz	4.8mA
OPA350	38MHz	5.2mA
OPA211	45MHz (Gain=1)	3.6mA
OPA835	51MHz (Gain=1)	250µA
OPA847	600MHz (Gain=12)	18.1mA

Initial Problem Revisited

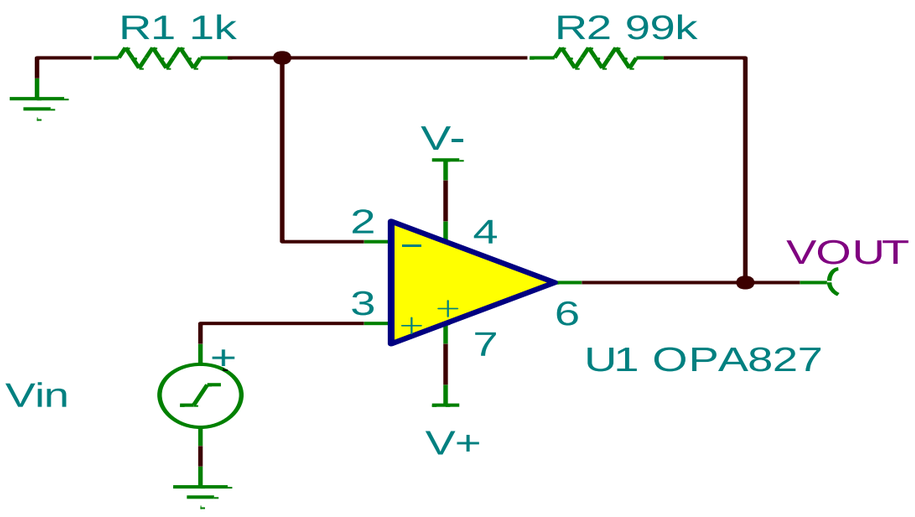

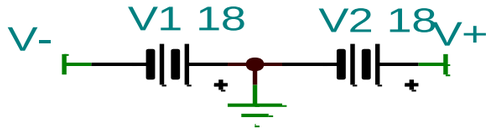

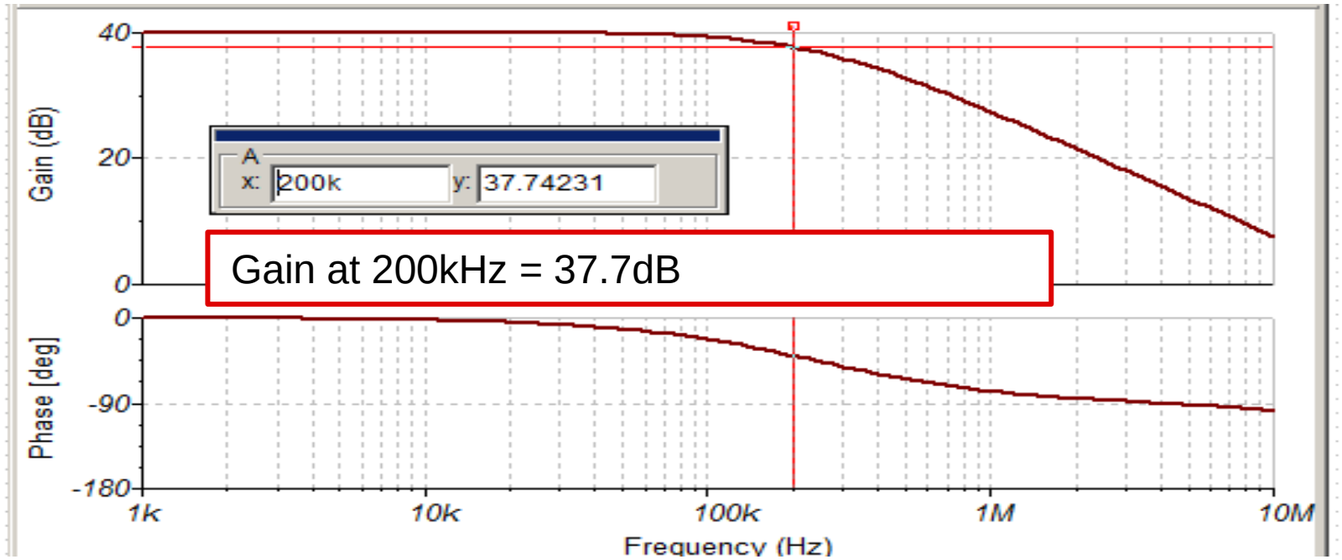

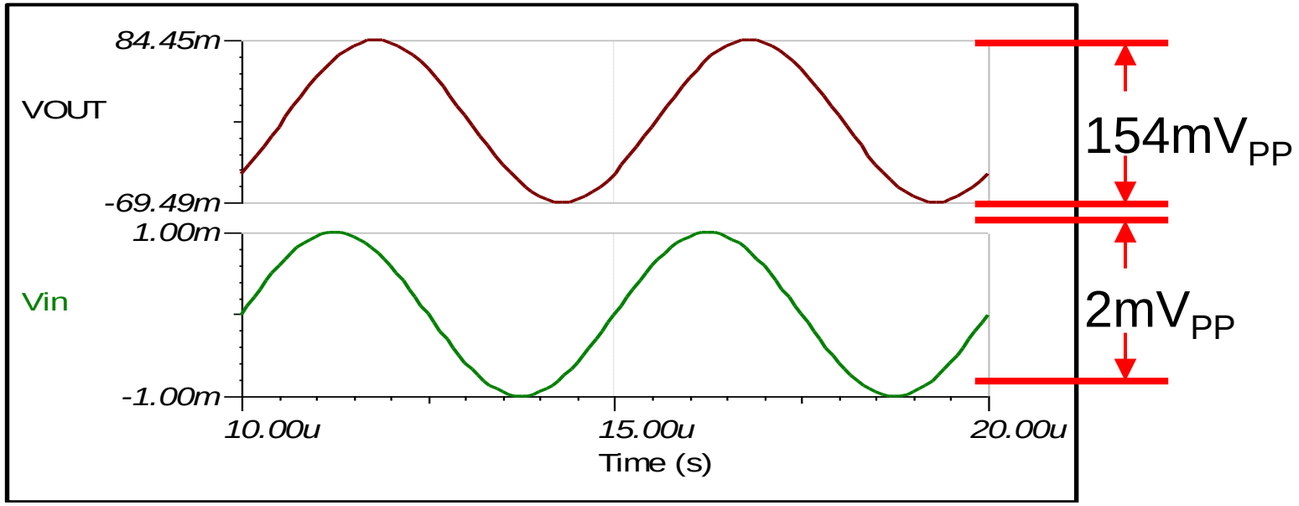

V_{IN} = 2mV$_{PP}$ @ 200kHz
Gain = $10^{37.7/20}$ = 76.7V/V
V_{OUT} = V_{IN} x Gain(V/V)
V_{OUT} = 2mV$_{PP}$ x 76.7 = **154mV$_{PP}$**

Texas Instruments

Multiple-Choice Quiz

- How will increasing the gain of an amplifier affect bandwidth?
  - a) bandwidth will increase
  - b) bandwidth will decrease
  - c) bandwidth will not be affected

- Where is the dominant pole on an A_{OL} curve?
  - a) at low frequencies (typically 1Hz to 100Hz)
  - b) at high frequencies (typically near the unity gain bandwidth frequency)

Texas Instruments

Multiple-Choice Quiz

- How can you calculate bandwidth using the gain bandwidth product? **Note:** BW is closed loop bandwidth, GBW is gain bandwidth, and G_{CL} is closed loop gain.
  a) BW = GBW / G_{CL}
  b) BW = GBW * G_{CL}
  c) BW = G_{CL} / GBW

- What condition is required for the gain bandwidth product to be valid?
  a) A_{OL} curve roll off must be greater than 20dB/decade
  b) A_{OL} curve roll off must be equal to 20dB/decade
  c) the A_{OL} curve cannot have a dominant pole
  d) the amplifier must be bipolar

Texas Instruments

Multiple-Choice Quiz

- Different model amplifiers have different gain bandwidth products (GBW). Surveying many different models, you will see GBW vary from _____.
  a) 10Hz to 1kHz
  b) 100Hz to 1MHz
  c) 1MHz to 500MHz
  d) 10kHz to 500MHz

- Amplifiers with wide bandwidth generally have _____.
  a) lower I_Q than amplifiers with narrow bandwidth
  b) higher I_Q than amplifiers with narrow bandwidth
  c) low slew rate
  d) stability problems

Multiple-Choice Quiz

- What is the change in magnitude due to a pole at the pole frequency, f_P?
  a) -20dB
  b) -3dB
  c) +3dB
  d) +20dB

- What is the phase shift due to a zero at the zero frequency, f_Z?
  a) -90°
  b) -45°
  c) +45°
  d) +90°

Texas Instruments

Multiple-Choice Quiz

- Assume that an amplifier with a gain bandwidth product of 10MHz is used for both gain = +1 and gain = -1. What is the bandwidth for each configuration?
  a) bandwidth for both configurations is 10MHz
  b) bandwidth is 10MHz for gain = +1 and 5MHz for gain = -1
  c) bandwidth is 5MHz for gain = +1 and 10MHz for gain = -1
  d) none of the above

Precision Labs: Quick Links

TI Op Amp Product Tree	www.ti.com/opamps	Landing Page for all TI Op Amps
Analog Engineer's Pocket Reference	www.ti.com/analogrefguide	Conversions, Tables and Equations
Analog Engineer's Calculator	www.ti.com/tool/analog-engineer-calc	Simple engineering calculations
TI Precision Labs – Op Amps	www.ti.com/precisionlabs	45+ Lecture/Labs Videos on Op Amp Topics
TI Precision Labs – ADC	www.ti.com/tipladc	20+ Lecture/Labs Videos on ADC Topics
DIP Adapter EVM	www.ti.com/tool/dip-adapter-evm	Op Amp Prototyping and Testing EVM
TI Designs	www.ti.com/referencedesigns	Ready-to-Use Subcircuit Designs
TINA-TI	www.ti.com/tool/tina-ti	Free SPICE Simulator
E2E Forums	e2e.ti.com	Engineer to Engineer Help Forums
Precision Hub – Blogs	www.ti.com/precisionhub	Technical Blogs by Analog Experts
TI WEBENCH Tool	www.ti.com/webench	Signal Chain Design and Simulation Tool

Free iTunes app: Analog Engineer’s Pocket Reference

Free iTunes app: Analog Engineer’s Pocket Reference

Thousands of engineers have downloaded our *Analog Engineer's Pocket Reference* e-book. Now you can literally keep this beloved resource it in your pocket at all times - thanks to our new iTunes app. In addition to the book, the app includes:

- Cool calculators
- A feed from our signal chain blog, Analog Wire
- Direct access to ask design or product selection questions via our E2E™ Community
- The ability to search for TI products

Download the app now

©Copyright 2017 Texas Instruments Incorporated. All rights reserved.

This material is provided strictly “as-is,” for informational purposes only, and without any warranty.
Use of this material is subject to TI’s **Terms of Use**, viewable at TI.com