TECH DAYS
Texas Instruments

Digital Isolation Technology and Solutions

Kevin Herring

Texas Instruments - Field Applications Engineer

kevin.herring@ti.com

Agenda

- Introduction to Isolation standards and terminology.
- TI Isolators Physical Construction and Circuit Architectures.
- TI Capacitive Isolation Barrier Quality and Lifetime Testing
- New Digital Input Receiver with Isolation – ISO1211 & ISO1212
- New Isolated Data + Isolated Power - ISOW784x
- Isolation Needs by Industry Applications

Introduction

What is Isolation?

Isolation is a means of preventing DC or unwanted transient current from flowing between two circuits with different ground potentials.

When Do We Isolate?

1. When there is a possibility for high voltage surges that may damage equipment or harm humans.
2. When interconnections involve large ground potential differences (GPDs) and disruptive ground loops need to be eliminated.
3. When communicating to high side components in motor drive systems.

Isolation enables data communication between a transmitter and a receiver, referenced to very different ground potentials

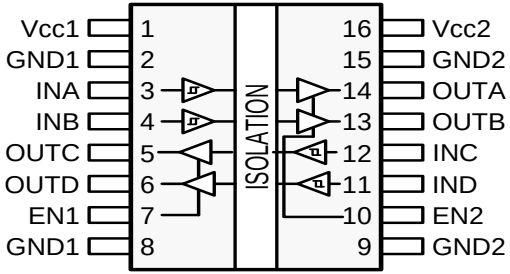

Example Isolator in a 16-pin package

Example of Breaking the Ground Loop

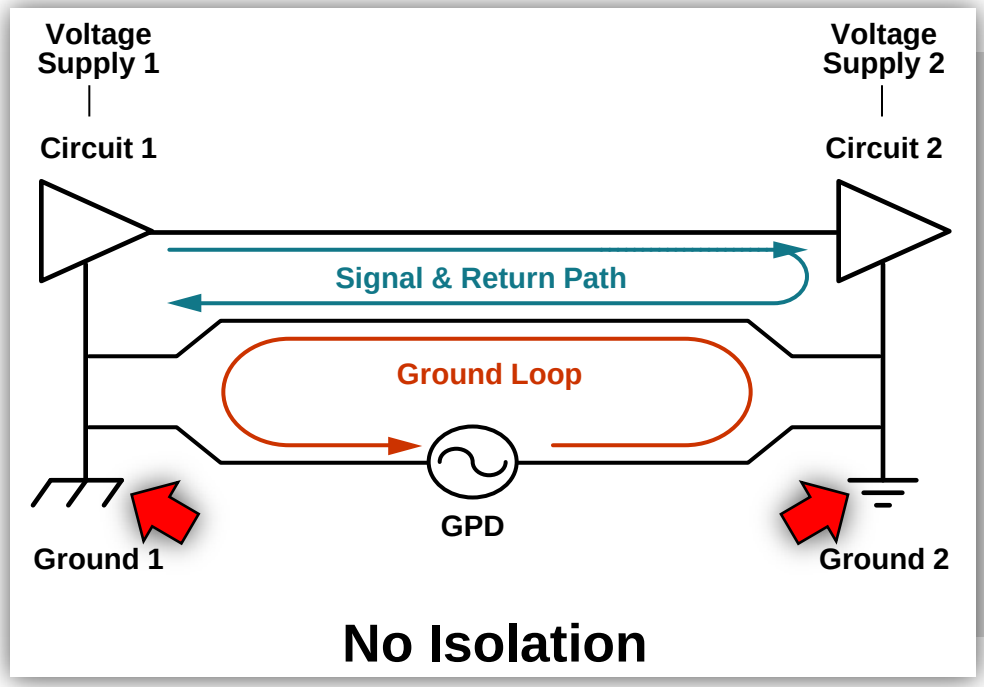

1) Electrical Installation can cause large GPDs (ground potential difference) between two remote nodes.
2) A direct ground connection between the nodes closes the ground loop.
3) Noise sources (i.e. electric motors) injecting large currents into the ground modulate the ground loop current.
4) This ground noise then appears in the signal path.
5) An isolator breaks the ground loop, thus removing signal path noise.
6) The GPD yet still exists and the isolator must be robust enough to withstand the large voltage differences.

Example of Breaking the Ground Loop

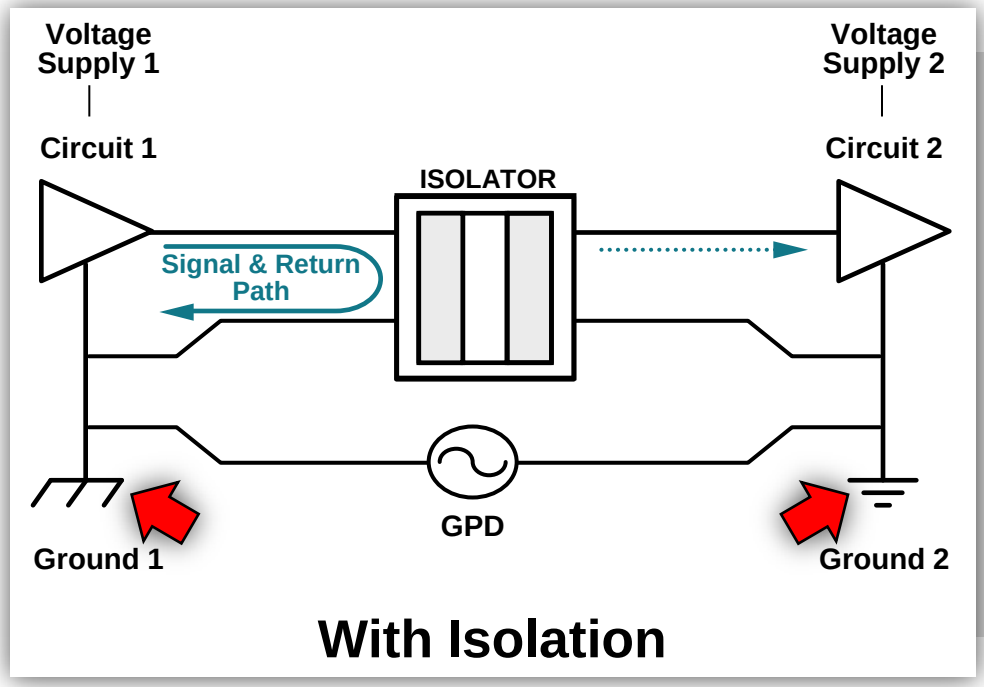

1) Electrical Installation can cause large GPDs (ground potential difference) between two remote nodes.
2) A direct ground connection between the nodes closes the ground loop.
3) Noise sources (i.e. electric motors) injecting large currents into the ground modulate the ground loop current.
4) This ground noise then appears in the signal path.
5) An isolator breaks the ground loop, thus removing signal path noise.
6) The GPD yet still exists and the isolator must be robust enough to withstand the large voltage differences.

Example of Safety Protection Against High Voltage

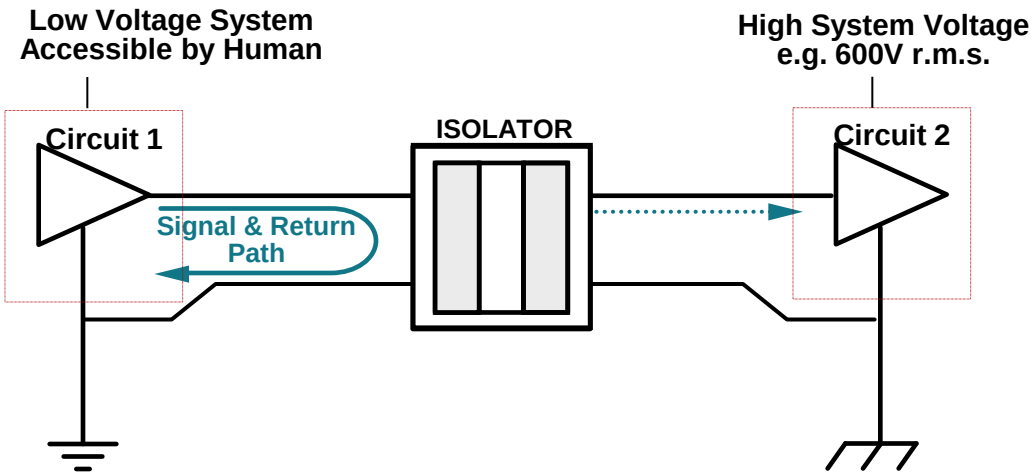

1) Industrial equipment running of 100s of volts, temporary overvoltage of 1000s of volts, and 10000v surges.

2) Isolation barrier is required to protect low voltage circuitry and human operators

Isolation – Example Applications

PLC
I/O & Communication

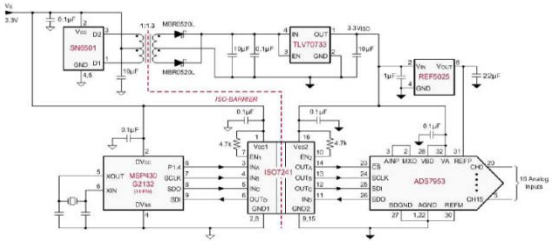

Isolate microcontroller from analog inputs/outputs, subject to faults/surges/noise from micro-controller.

Instrumentation
Data acquisition & Communication

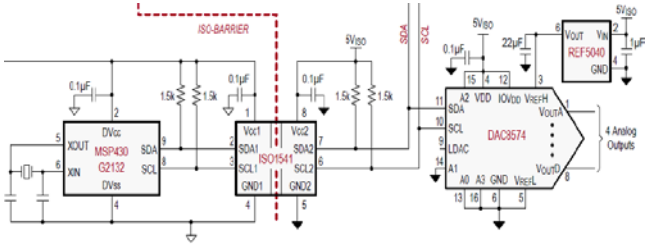

Isolate data acquisition channels involving human interfaces from master side that could be supplied from 120/240V mains.

Motor Drives
Gate Drive & Sensing

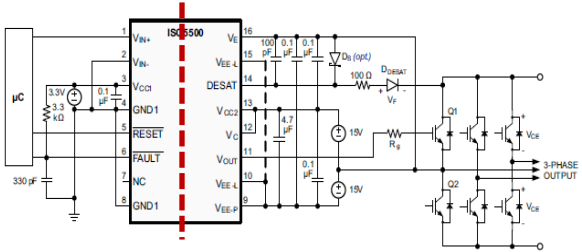

Protect micro from High Voltage. Secondary side ground is connected to IGBT emitter : subject to high voltage transitions by construction.

Other Applications: Patient monitoring systems, Solar Inverters, HVAC, Merchant Power

Standards that apply to Isolation

- Component level Standards:
  - IEC 60747-5-5 (VDE 0884-5-5) for Opto Isolators.
  - VDE 0884-10 / VDE 0884-11 for Capacitive/Magnetic isolators, reinforced
  - IEC 60747-17
  - UL 1577

TI Isolators must pass

- System Level / End Equipment Safety Standards
  - IEC 61800-5-1, Safety requirements for adjustable speed drives
  - IEC 60601-1, Medical equipment standard
  - IEC 61010-1, Safety standard for measurement, control and Lab equipment
  - IEC 60950-1, Telecom equipment standard

- EMC and Emissions
  - IEC 61000-4-x , ESD, EFT, Surge, RF immunity
  - CISPR22 or equivalent, EM radiated emissions

Customer boards and systems must pass – TI Isolators should enable

Isolation terminology (in brief)

Parameter	Definition	Relevance
Basic Isolation	Isolation that can provide protection against high voltage as long as the barrier is intact.	Basic isolation needs to be coupled with another insulation barrier, if human access is possible.
Reinforced Isolation	Isolation that is equivalent to two basic isolation barriers in series.	Reinforced isolation by itself is sufficient as a safety barrier against high voltage.
V_{IOTM}	The sinusoidal voltage isolator can tolerate for 60s (defined in peak)	Tolerance to temporary overvoltage on supplies due to load changes, arcing etc.
V_{ISO}	The sinusoidal voltage isolator can tolerate for 60s (defined in rms)	
V_{IORM}	Maximum periodic voltage that the isolator has to handle on a continuous basis throughout its operating life (defined in peak)	The voltage that the isolator has to handle as part of normal operation (for eg. an isolated gate driver sees a pk voltage equal to the DC bus voltage).
V_{IOWM}	Maximum continuous working voltage that the isolator has to on a continuous basis throughout its operating life (defined in rms)	
V_{SURGE}	Maximum peak voltage of the 1.2us/50us standard surge waveform that the isolator can handle.	Represents direct and indirect lightening strikes. Min 10kV required for reinforced isolation.
Creepage	Minimum distance from pins on side 1 to side 2 along the surface of the package	Limits working voltage or continuous voltage due to degradation along package surface (called tracking)
Clearance	Minimum distance from pins on side 1 to side 2 through the air	Limits peak voltages and surge voltages in system environment due to air breakdown
CMTI	Common Mode Transient Immunity; The maximum *rate of change* of ground potential difference (GND1-GND2) that the isolator can withstand without bit errors	Indicates robustness of isolator to ground noise. Very important in gate-drive applications

For details refer: http://www.ti.com/lit/pdf/slyy063

Creepage & clearance

Creepage distance

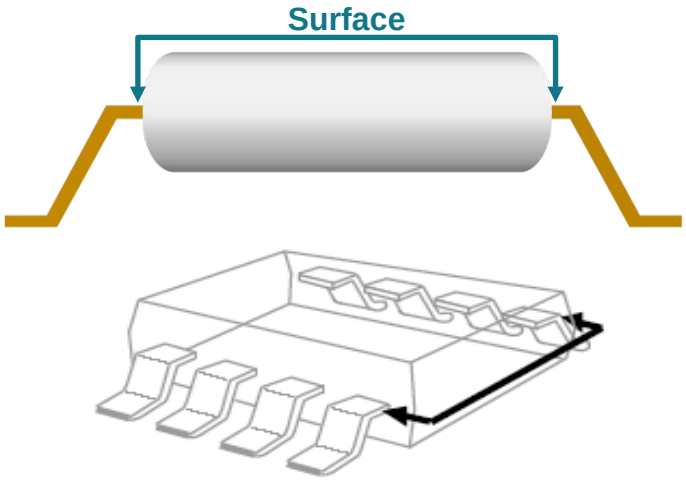

Shortest distance between two conductive leads, across isolation barrier, measured along surface of insulation.

Clearance distance

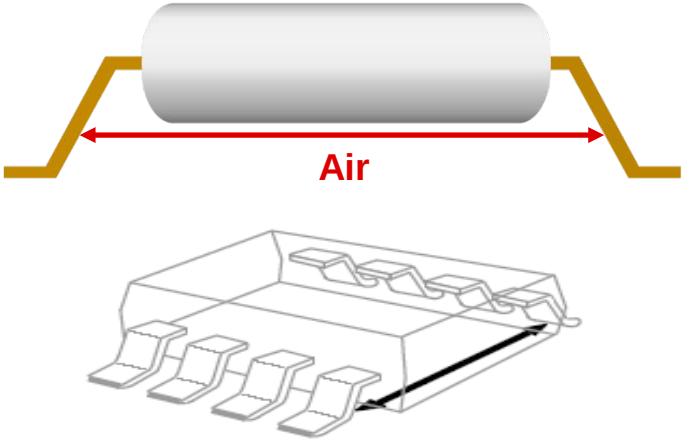

Shortest distance between two conductive leads , across isolation barrier, measured through air.

Data isolation: Common-Mode Transient Immunity

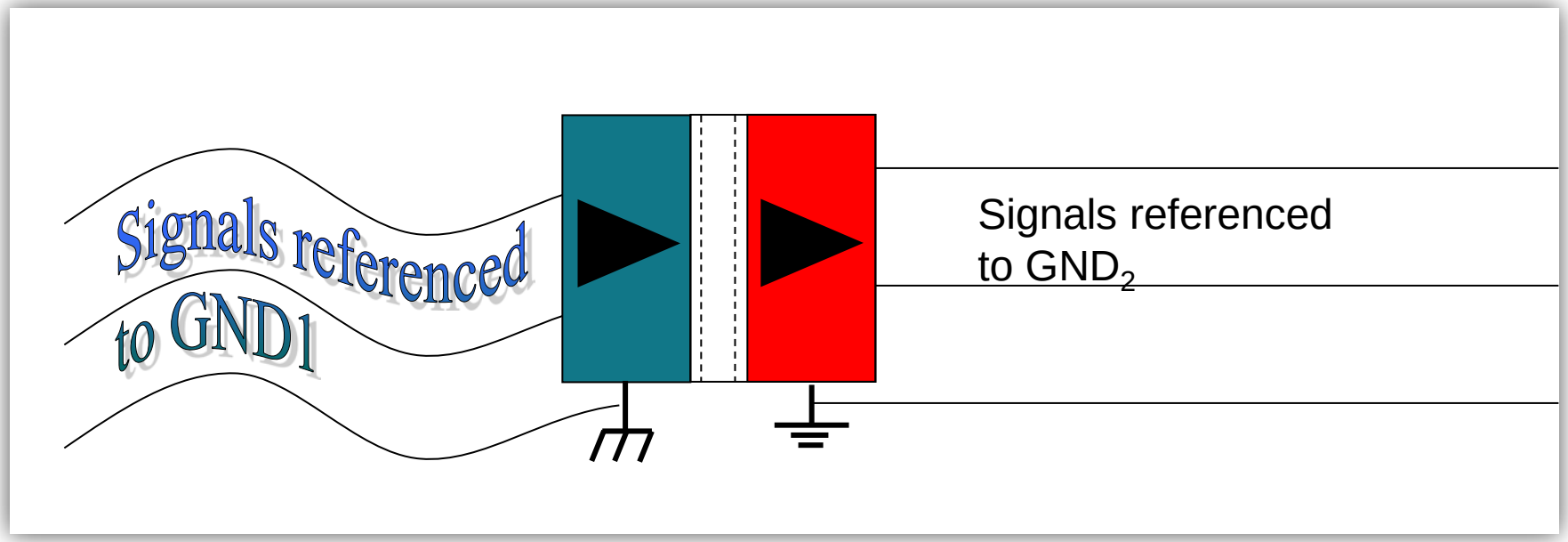

CMTI – The change in ground 1 relative ground 2. Measured in kV / µSec.

Agenda

- Introduction to Isolation standards and terminology.
- **TI Isolators Physical Construction and Circuit Architectures.**
- TI Capacitive Isolation Barrier Quality and Lifetime Testing
- New Digital Input Receiver with Isolation – ISO1211 & ISO1212
- Isolated Data + Isolated Power - ISOW784x
- Isolation Needs by Industry Applications

How are Single Cap Isolators Constructed?

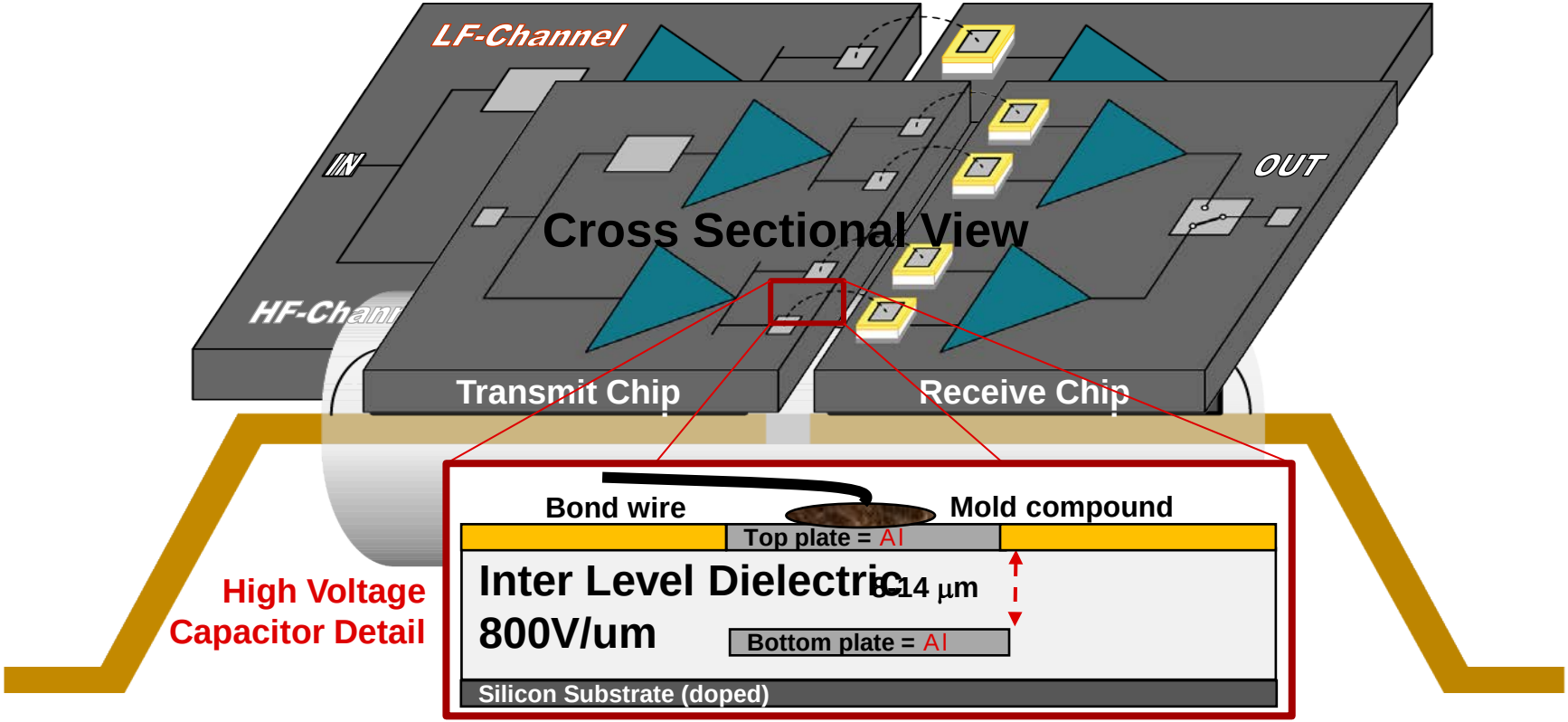

How are Dual Cap Isolators Constructed?

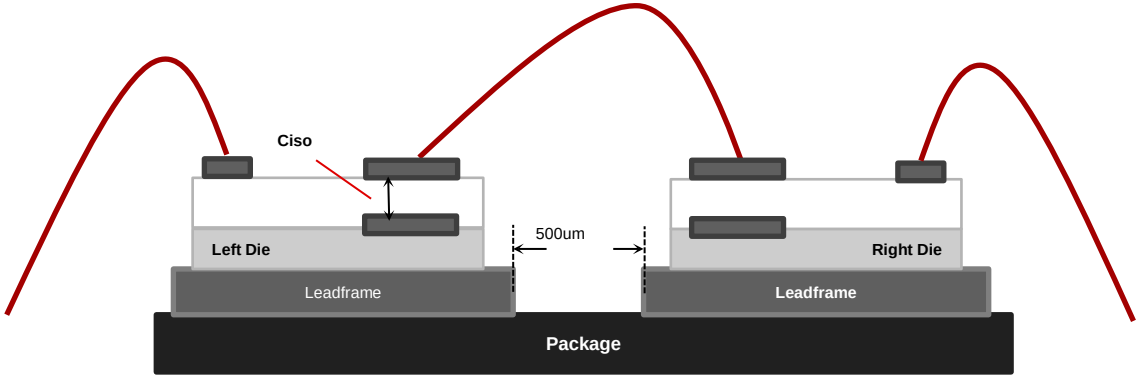

Two Capacitors In Series:

Industry Leading Reinforced Isolation

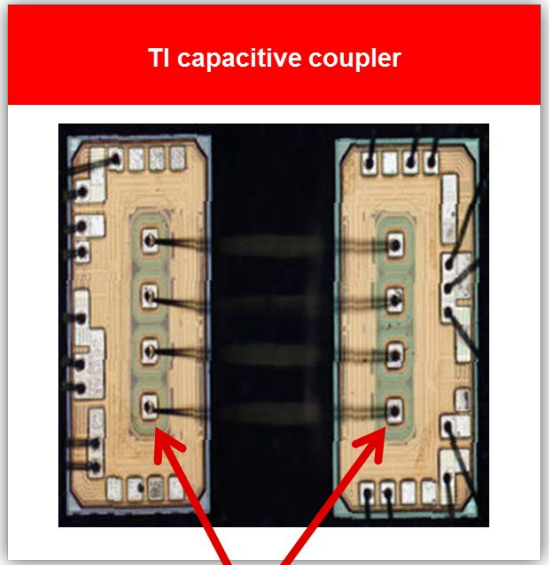

Isolation build with 2 capacitors
(TI couplers with reinforced isolation)

Reinforced Isolation Technology

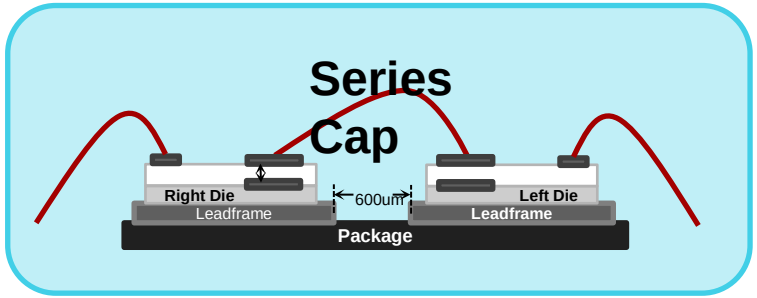

ISO78xx/77xx

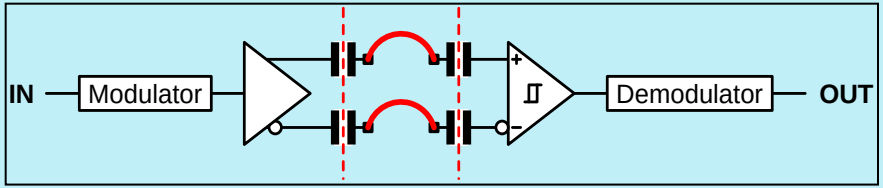

- Reinforced Isolation realized by Series Capacitor configuration
- Combined Isolation capacitor thickness is ~25um (SiO_2)
- 12.8kV surge voltage, 8kVpeak transient over-voltage, 1.5kVrms working voltage

Texas Instruments

Capacitor Isolator Circuit Technology

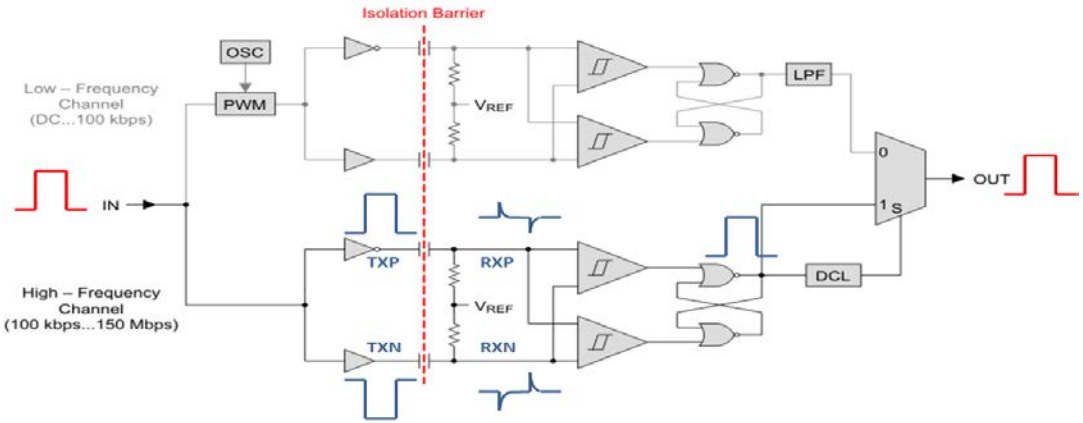

Edge Based Architecture – Best Suited for Low Power

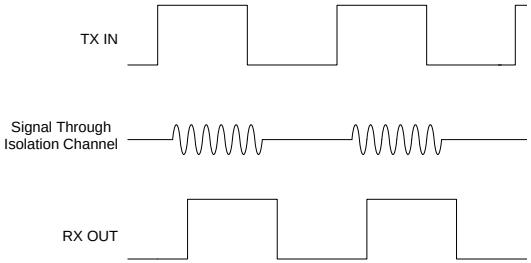

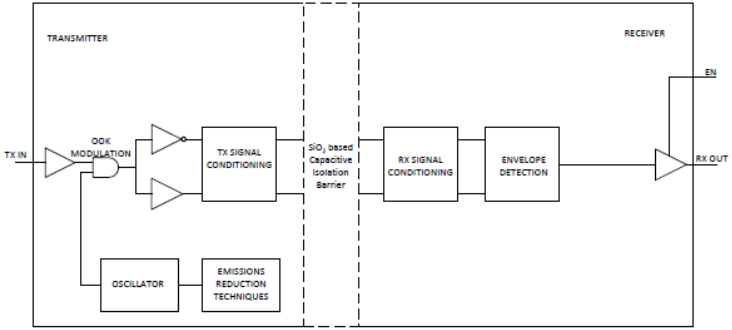

On-Off-Keying Architecture – Best Suited for High Immunity

Spread Spectrum Clock for low emissions

Agenda

- Introduction to Isolation standards and terminology.
- TI Isolators Physical Construction and Circuit Architectures.
- **TI Capacitive Isolation Barrier Quality and Lifetime Testing**
- New Digital Input Receiver with Isolation – ISO1211 & ISO1212
- Isolated Data + Isolated Power - ISOW784x
- Isolation Needs by Industry Applications

Foundation of Quality – Design for High Voltage

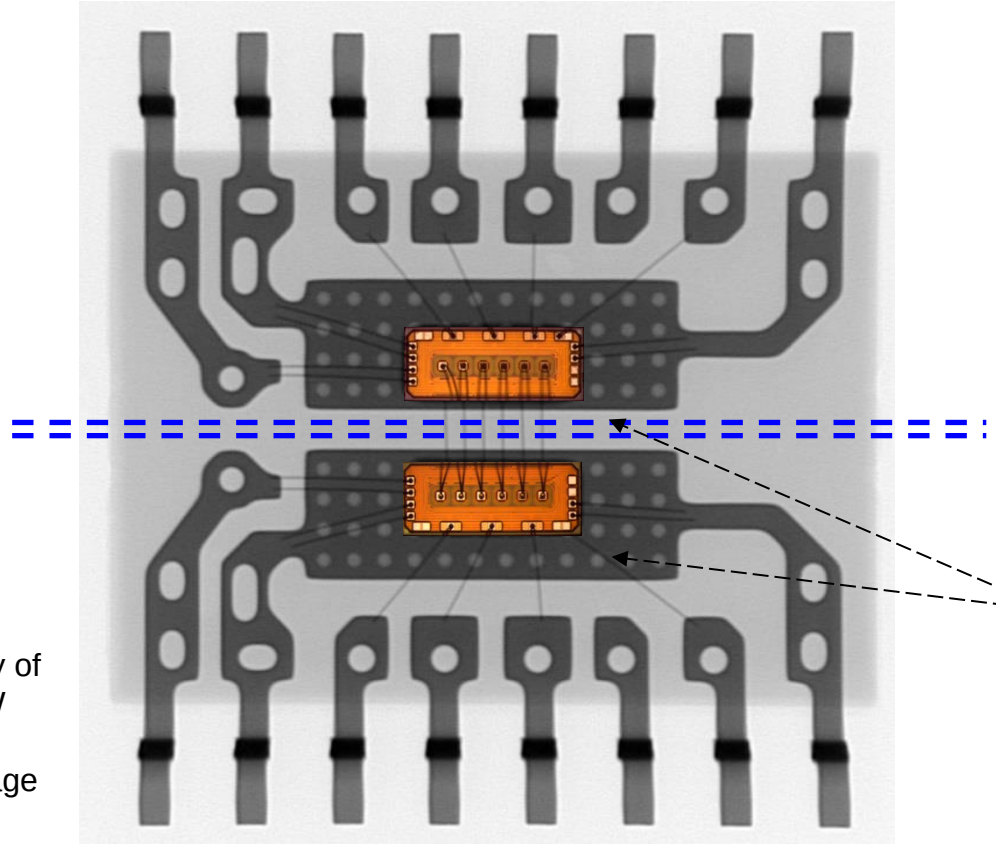

X-Ray of 16DW SOIC package

Reinforced Isolation Barrier:

- *Wide Body Package*
  - *External clearance and creepage >8mm for 16DW SOIC (shown)*
  - *Internal spacing between die pads inside the package, > 600um*
- *Two die, each with high voltage isolation capacitors*
  - *HV capacitors on each die*
  - *Connected in series*

Foundation of Quality – Design for High Voltage

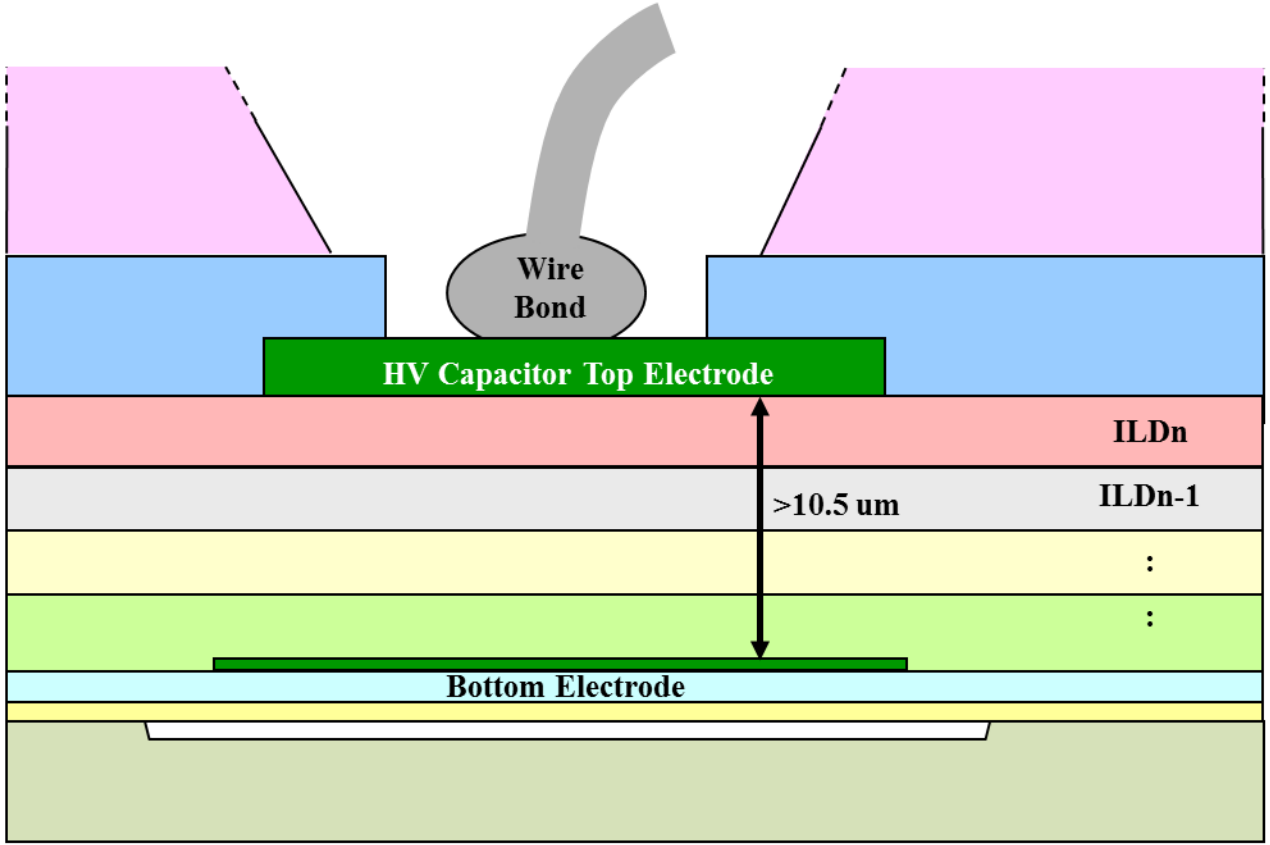

- *Reinforced Isolation barrier consists of two high voltage capacitors*
  - *One on each die*
  - *Connected in series*
- *Each capacitor has a thick SiO_2 dielectric*
  - *Multiple standard dielectric layers*
  - *CVD films*
  - *CMP planarization*

➢ *Very high isolation voltage capability*

Foundation of Quality – Qualification & Reliability

- **Ramp to Breakdown (RTB): Qualification Test**
  - Voltage ramped at a rate of 1 kV_{rms}/second until a breakdown occurs in the isolation barrier

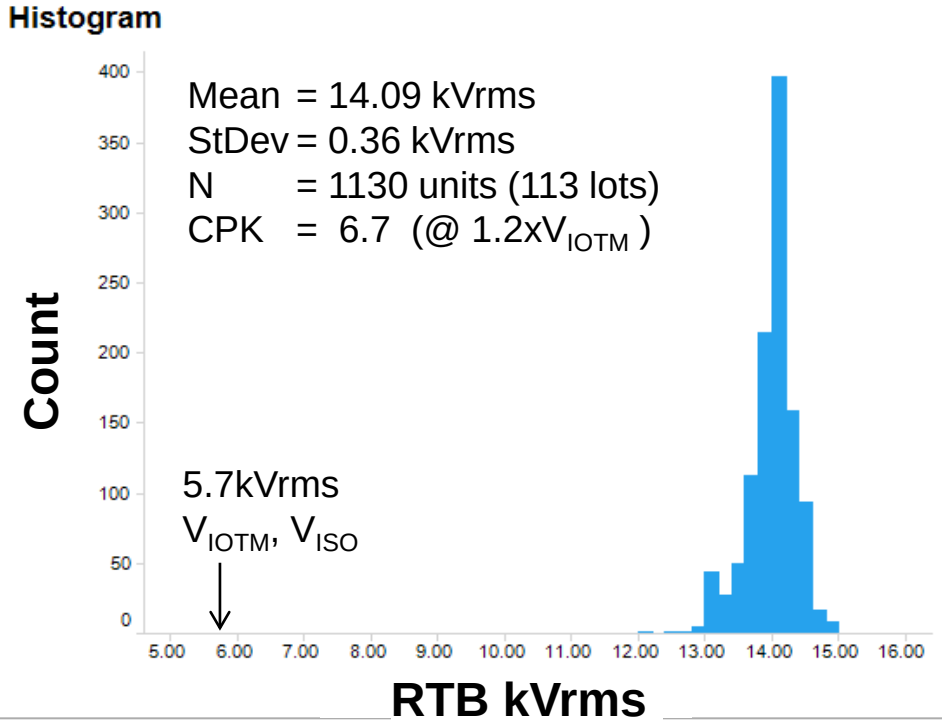

e,

- *Ramp-to-Breakdown sample test.*
- *Verifies high margin of the actual breakdown voltage above the maximum transient isolation voltage (V_{IOTM})*
  - *For example: ISO77xx, AMC1303 V_{IOTM} = 5.7 kVrms*

➢ *Very high isolation voltage capability*

Foundation of Quality – Qualification & Reliability

- **Surge Test: Qualification Test**
  - Surge verifies the DUT's immunity to ***very*** high voltage levels over a short period of time (such as a lightening strike). Surge peak voltage required by external standards (IEC 61000-4-5 & VDE 0884-1x):

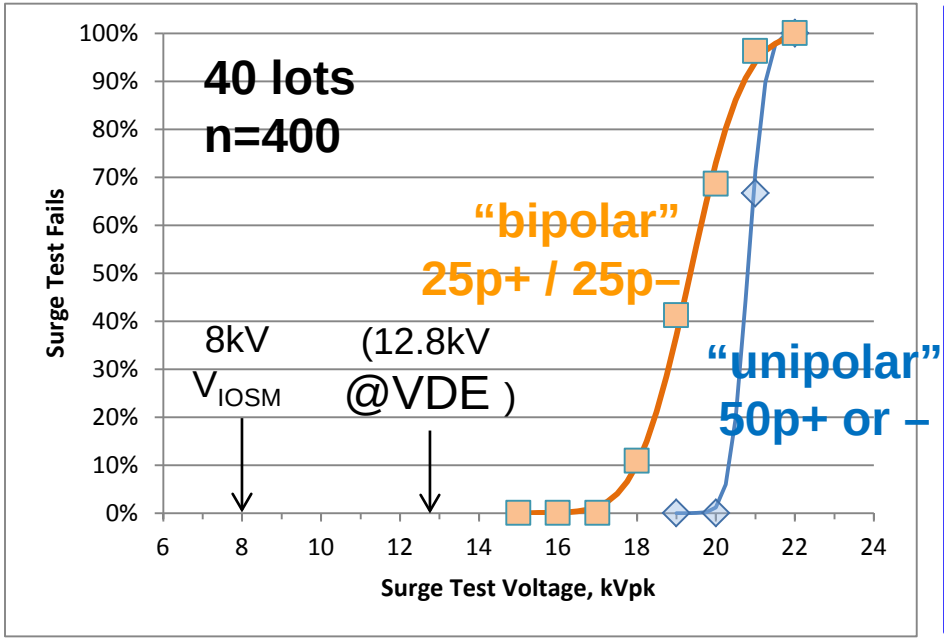

- *Surge characterization sample test.*
- *Verifies high margin of the actual breakdown voltage above the maximum surge isolation voltage (V_{IOSM})*
  - *For example: ISO77xx, AMC1303 V_{IOSM} = 8.0 kVpk*

➢ *Very high isolation voltage capability*

Foundation of Quality – Qualification & Reliability

- **TDDB (Time Dependent Dielectric Breakdown) is an electrical lifetime test.**
  - Standard methodology for determining the lifetime of a dielectric as a function of Voltage

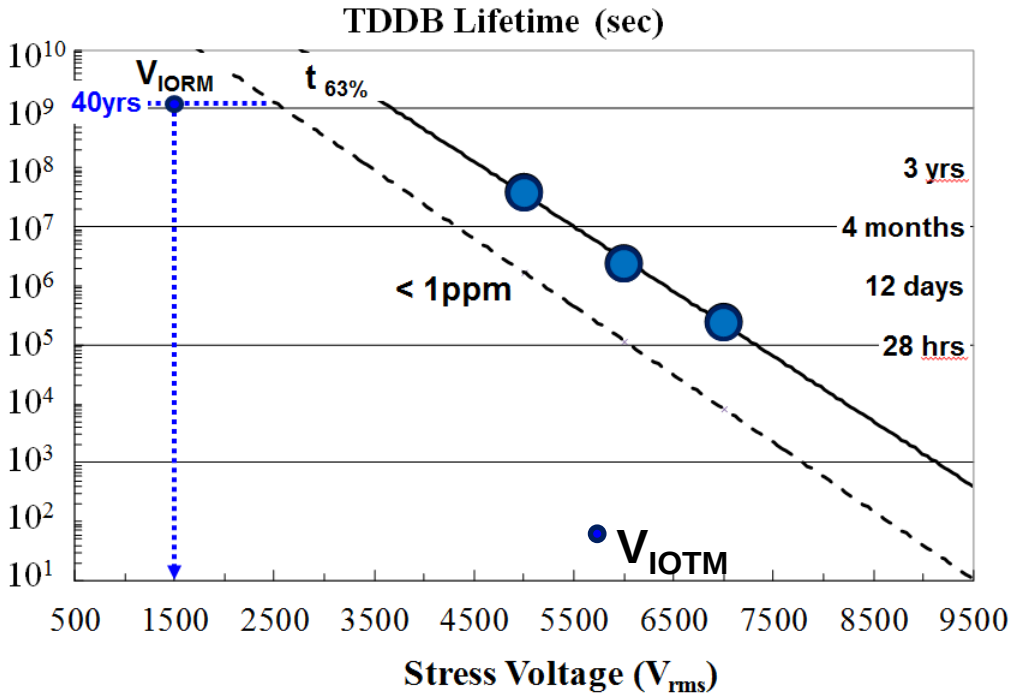

- *TDDB is accelerated lifetime testing of the isolation barrier*
  - *Weibull statistics at each voltage*
  - *Multiple voltages. Fit to model: Time-to-Fail = A * exp (-γ * E)*
- *TDDB verifies the lifetime*
  - *For example: ISO77xx, AMC1303 V_{IORM}, V_{IOWM} = 1.5 kVrms*

➢ *First technology in the industry to certify to VDE 0884-11*

Foundation of Quality – SiO_2 Insulation

TI **Capacitive Isolation** uses SiO_2 as the Isolation Dielectric.

– SiO_2 advantages compared to competing HV isolative material are: **reliability** and **dielectric strength**

Insulator Materials	Dielectric Strength, 1 sec	Dielectric Strength, 40yr reliability
Air	~1 Vrms/um	
Epoxies	~20 Vrms/um	
Silica filled Mold compounds	~100 Vrms/um	
Polyimide	~300 Vrms/um	~20 Vrms/um
SiO_2	~500 Vrms/um	~100 Vrms/um

Table 1: Commonly used materials for High-Voltage isolation (SiO_2 has the highest dielectric strength and best reliability)

Comparison of SiO_2 vs. Traditional Opto

TI capacitive coupler

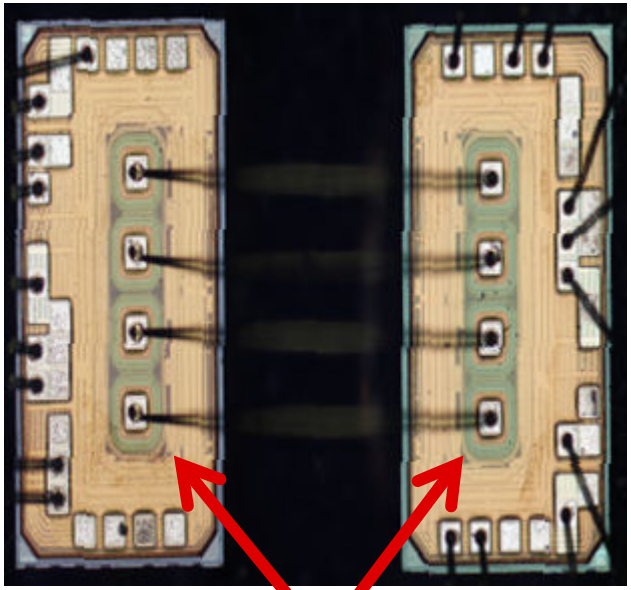

Isolation built with 2 capacitors
(TI couplers with reinforced isolation)

Opto coupler

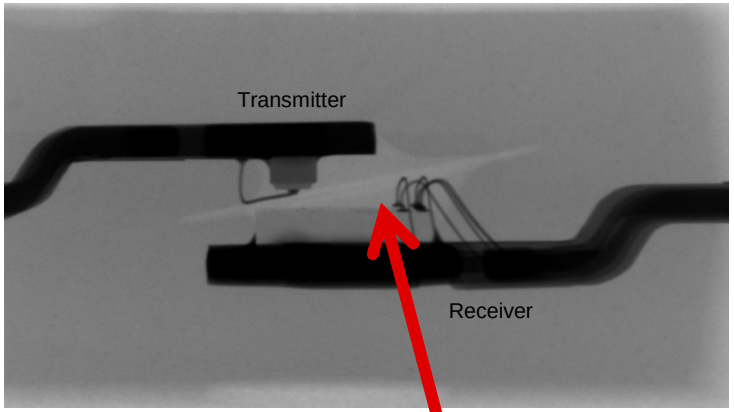

Isolation built with transparent
silicone and thin tape

Comparing Quality and Reliability

- **The main <u>Isolation</u> electrical lifetime test is <u>TDDB</u>: Qualification Test**
  - Standard methodology for determining the lifetime of a dielectric as a function of Voltage

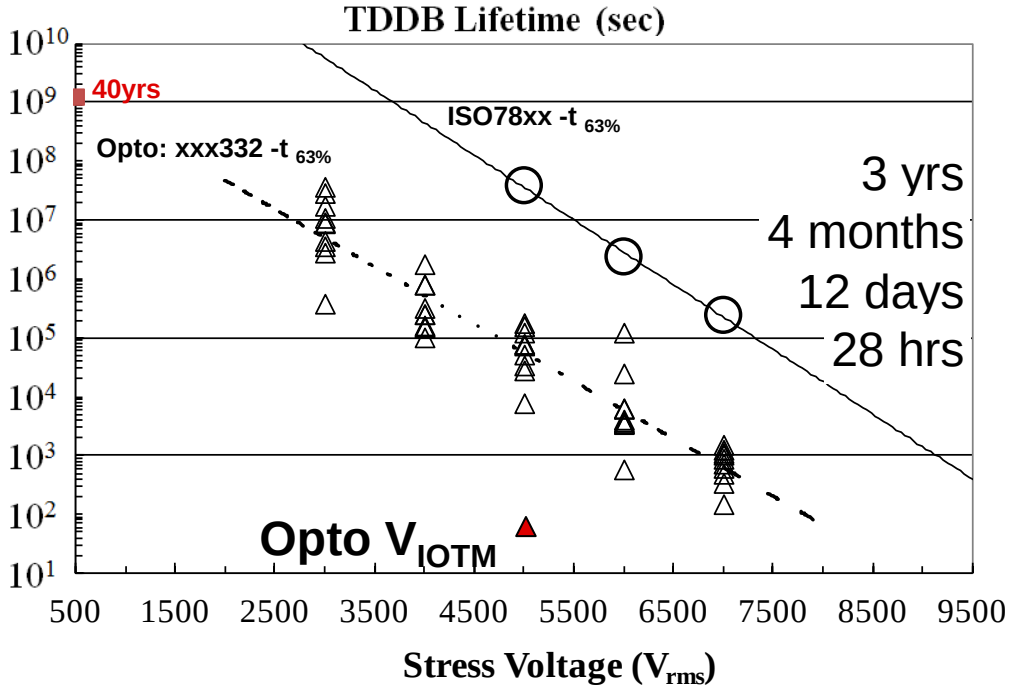

- Like all dielectric materials, opto-coupler does degrade over time under high voltage stress
- TDDB testing is needed for all HV isolation technologies, in addition to partial discharge testing on each unit
- TDDB data of opto-coupler fits standard TDDB E-Field model, even down to 3kVrms testing

Comparing Quality and Reliability

- **The main <u>Isolation</u> electrical lifetime test is <u>TDDB</u>: Qualification Test**
  - Standard methodology for determining the lifetime of a dielectric as a function of Voltage

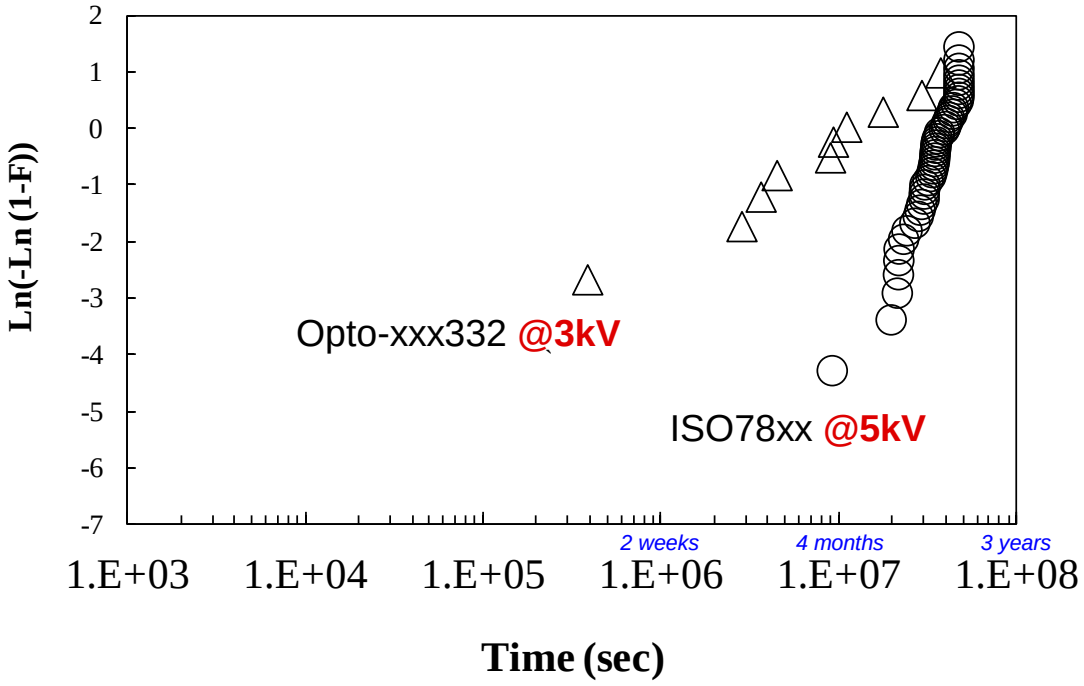

- ISO78xx shows much tighter distribution at 5kVrms than opto at 3kVrms TDDB
- At 5kVrms, ISO78xx shows much higher MTTF (mean-time-to-fail), 402 days than 103 days of Opto-xxx332 at 3kV

Comparing Quality and Reliability

- **The main <u>Isolation</u> electrical lifetime test is <u>TDDB</u>: Qualification Test**
  - Standard methodology for determining the lifetime of a dielectric as a function of Voltage

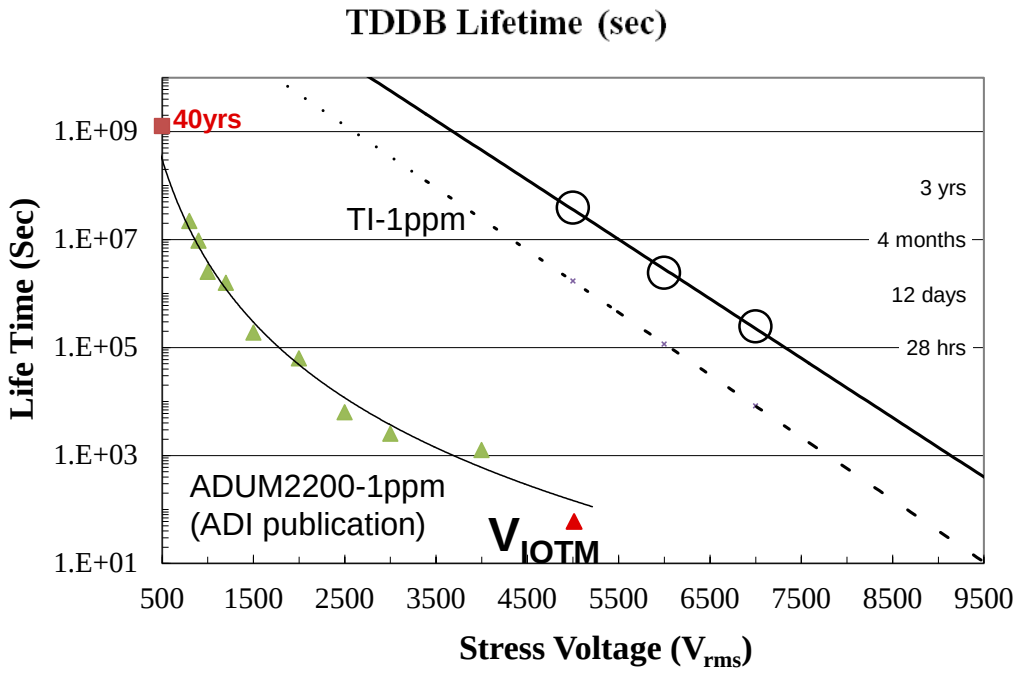

- Polyimide dielectric follows a different exponential relation to the stress voltage ("power-law").
- Polyimide lifetime degrades after exposure to ambient moisture.
- Polymer TDDB must be tested after units have reached equilibrium with ambient moisture.

Conclusion

- TI's isolation family of products has high voltage capability that exceeds the requirements for reinforced isolation.
- The quality of HV isolation is demonstrated by substantial margins using statistical test methods.
- The reliability of the HV isolation process technology is proven by TDDB, which is the industry standard method of proving lifetime at use conditions.
- For more details, see the TI white paper "Enabling high voltage signal isolation quality and reliability."

Agenda

- Introduction to Isolation standards and terminology.
- TI Isolators Physical Construction and Circuit Architectures.
- TI Capacitive Isolation Barrier Quality and Lifetime Testing
- **New Digital Input Receiver with Isolation – ISO1211 & ISO1212**
- Isolated Data + Isolated Power - ISOW784x
- Isolation Needs by Industry Applications

ISO121x – Isolated 24V-60V Digital Input Receiver

3000 V_{RMS}, 4Mbps, with 60V standoff on input pin

RELEASED TO MARKET
EVMs available

Features

- **Digital Input Channel**
  - Does not need field side supply
  - IEC 61131-2 Type 1/2/3 characteristics
  - +/-60 V stand-off on input pins
  - 2.1 mA to 2.5 mA precise current limit, resistor programmable up to 6mA for V_{IN} = 6V to 36V
  - 6V to 11V, voltage transition thresholds
  - Low propagation delay: 125 ns max
  - 4 Mbps data rate
  - Can be used with high-side and low-side field transmitters.
- **Integrated SiO_2 Capacitive Isolation**
- **Immunity and Certifications**
  - CMTI: 70kV/µs typical (25kV/µs min)
  - 2500 V_{RMS} Isolation Rating (UL 1577)
  - 5200 kV_{PEAK} Surge
  - 400 V_{RMS} Working Voltage (DIN V VDE V 0884-10)
- **Power and Package**
  - 2.25V to 5.5V Wide Input Supply Range (V_{CC1})

Applications

- **Industrial Automation**
  - PLC, Servo, Motor Control, Sensors

Benefits

- **Replaces 2mA current limit circuit + Opto-coupler**
  - Does not need field side supply
  - Does not need co-design with opto-couplers
  - Stable performance over lifetime – no aging as with optocouplers.
- **Basic Safety Isolation rating**
- **High Immunity**
  - Robust EMI for IEC61000-4-x ESD, EFT events
  - Class A; High Conducted & Radiated RF immunity
- **Enables higher data-rates than Opto-couplers.**

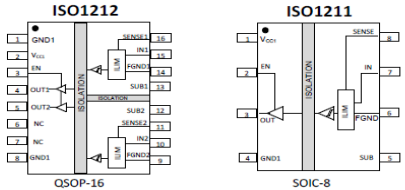

ISO1211 Application Examples

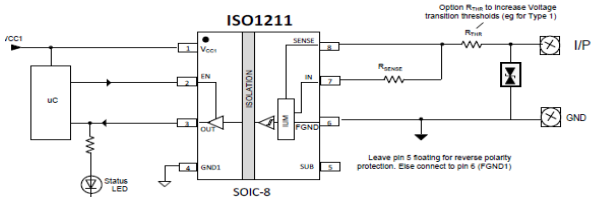

Tech Notes:

How to Improve Speed and Reliability of Isolated Digital Inputs in Motor Drives
How To Simplify Isolated 24-V PLC Digital Input Module Designs
How to Design Isolated Comparators for ±48V, 110V and 240V DC and AC Detection

ISO121x Replaces Optocouplers in Isolated Digital Inputs

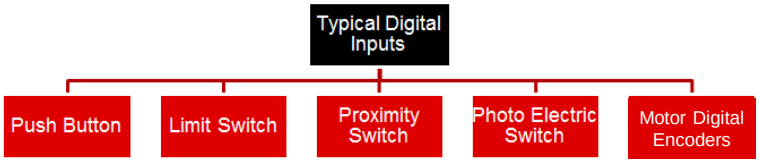

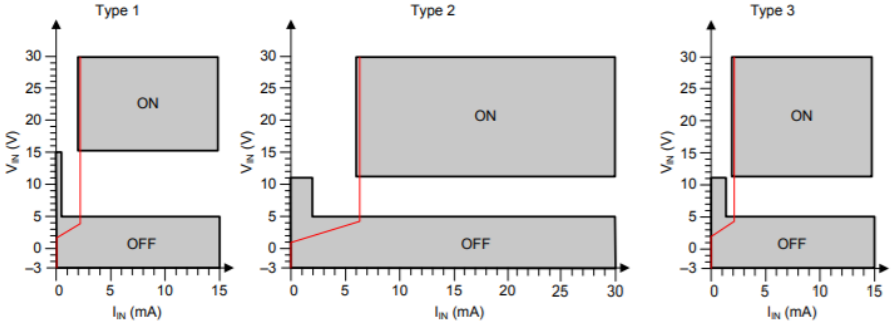

Figure 15. Switching Characteristics for IEC61131-2 Type 1, 2, and 3 Proximity Switches

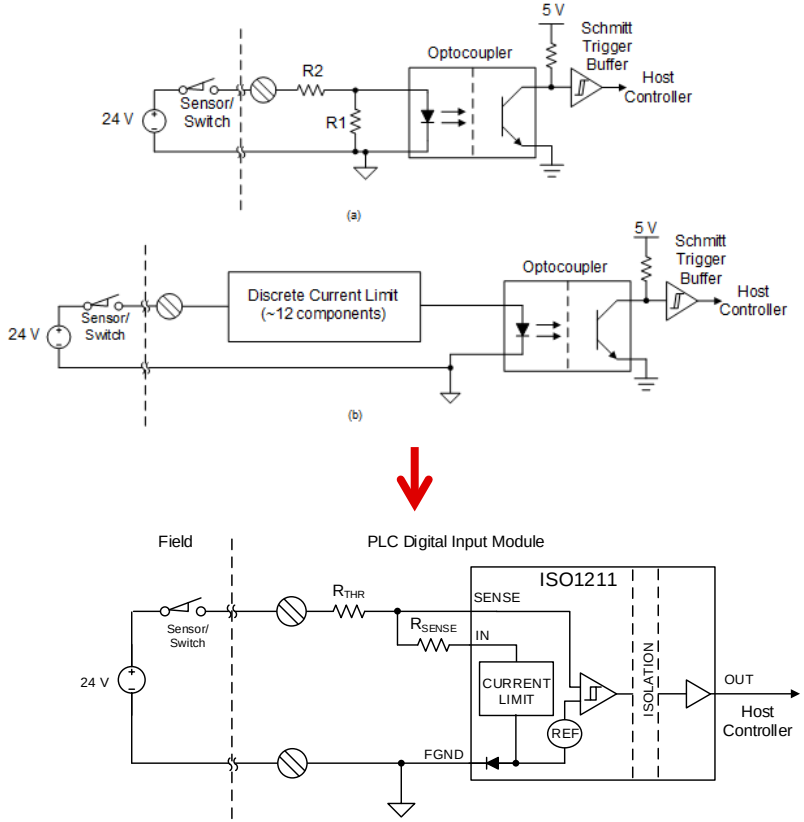

Discrete Approach Used by Some Customers Today

Pros

- Current limit uses 9-15 discrete components which helps spread out the heat dissipation.
- Optos only require the external 24V field supplies to power the transmit side. No bias supply required on field side unlike a traditional digital isolator needs.
- Heat generated in optos is limited by driving them at 2mA.

Cons

- Current limit circuit using 9-15 discrete components takes precious PCB space.
- Current limit using 9-15 discretes adds placement cost of $0.03 to $0.05 per component.
- Discrete current limit circuit has poor regulation. It can be ~8mA with a 30V input causing excessive self heating in the module.
- High speed and high temperature optos increase system cost.
- Self heating due to poor input current regulation and the large number of components increase chances of failure. This increases system level FIT numbers of the module.

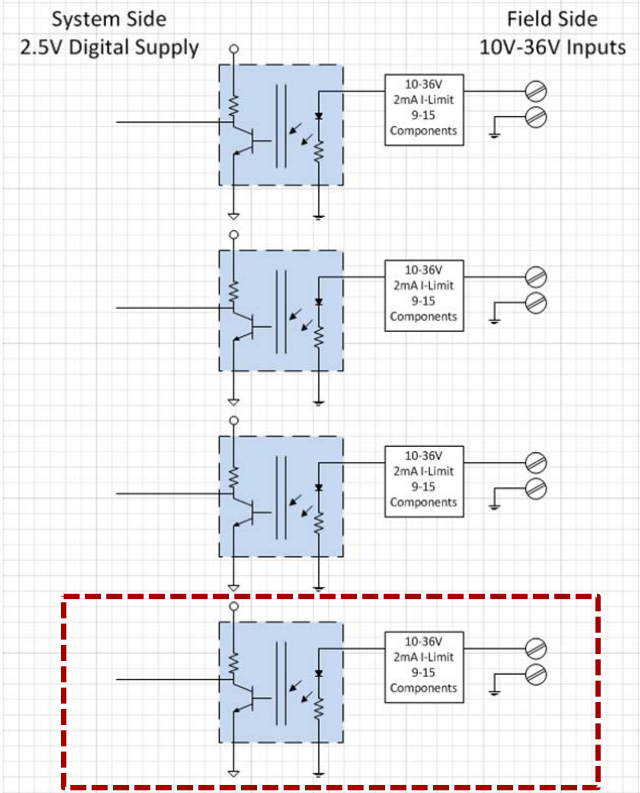

ISO1211 and ISO1212 combine isolation and current limit functions into a single part!

Digital Input Module – What Does It Do?

- Digital Input Modules are used to monitor manufacturing process sensors.
- The sensor can be a simple switch closure, a proximity sensor or encoder input.
- The field side digital input terminal is isolated from the system side MCU and backplane.

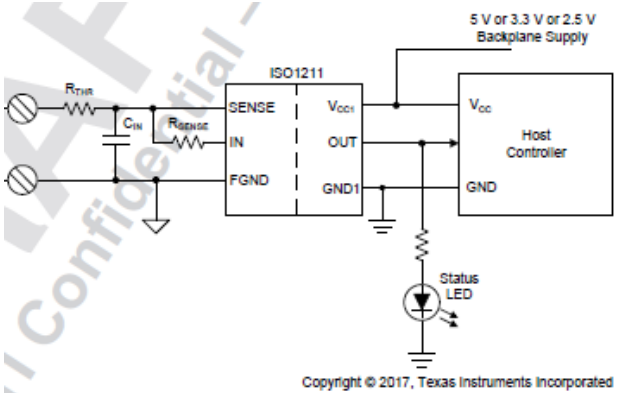

Example IEC-61131-2 Type 3 Input Current Limits

Input Voltage	IEC Defined Input State	Input Current Sinking	Output State
-3V to <+5V	State 0 (Off State)	0 to ≤15mA (0mA = No Self Heating)	Low
5V to ≤11V	Transition State (Input Current Could Power the Sensor)	1.5mA to ≤15mA (1.5mA Limits Self Heating)	Low
11V to ≤30V	State 1 (On State)	2mA to ≤15mA (2mA Limits Self Heating)	High

ISO1211 Has Ideal IEC-61131-2 Type 3 Function and Minimal Self Heating

Example Rsense = 562Ω and Rthr = 1K

Input Voltage	Input Current Sinking	Output State
-3V to <+5V (State 0)	<1.5mA Creates minimal self heating.	Low
5V to ≤11V (Transition State)	>1.5mA Limits self heating but still meets IEC-61131-2 minimum current requirements.	Low
11V to ≤30V (State 1)	2mA limit over 30Vin range keeps self heating to a minimum. Allows higher channel count per module.	High

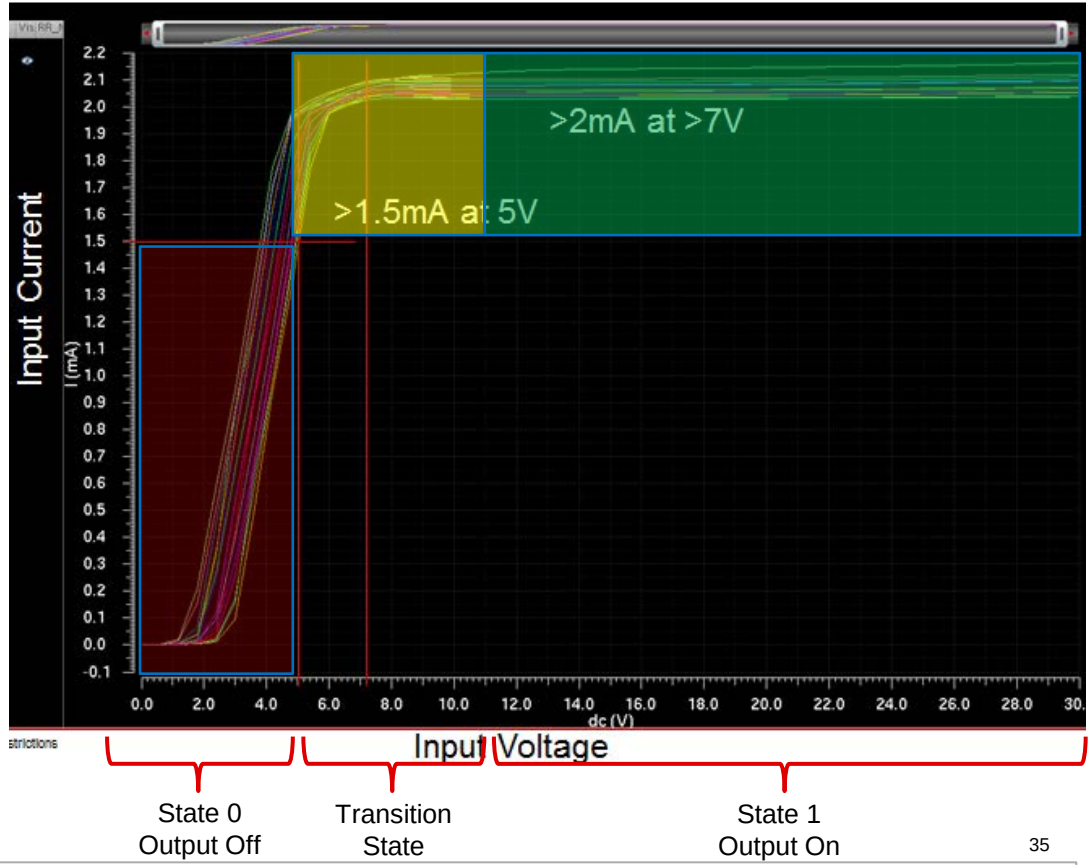

Texas Instruments

Tight Input Current Regulation Over Temp Range -40C to +125C Dramatically Reduces Heat Generated in the Module

	1- Ch. Power Dissipation	16 Channels Power Dissipation	32 Channels Power Dissipation
2.5mA @ 30V (ISO1211)	75mW	1.2W	2.4W
8mA @ 30V (Discrete Solution)	240mW	3.84W	7.68W
2.75mA @60V (ISO1211)	165mW	2.64W	5.28W
8mA @ 60V (Discrete Solution)	480mW	7.68W	15.36W

Thermal Performance ISO1212 vs Traditional Solutions

ISO121x Devices Reduce Board Temperatures vs Traditional Solutions

ISO1212:

0.72W power dissipation for 8-ch at 36V input

Needs 0.25W series resistors.

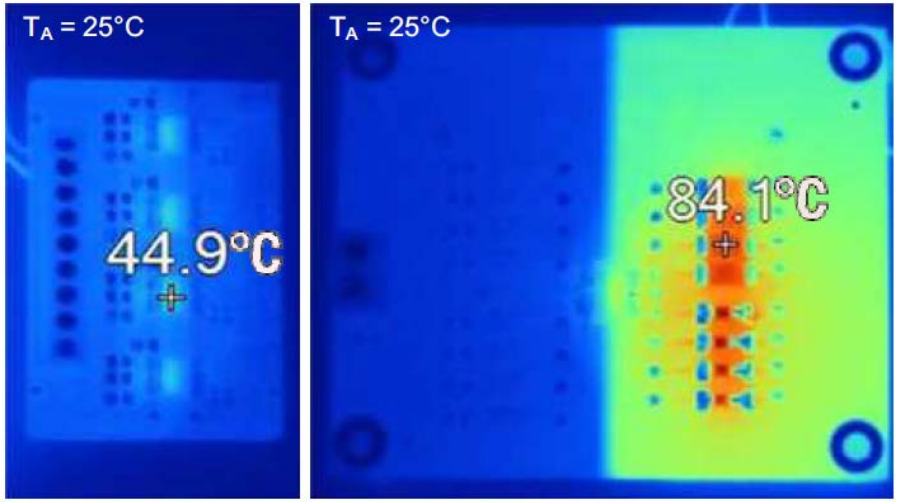

a) 8-Ch With ISO1212

b) 8-Ch Traditional Solution Without Current Limit

Traditional 3.6W power dissipation for 8-channels at 36V input

Needs 0.5W-1W series resistors

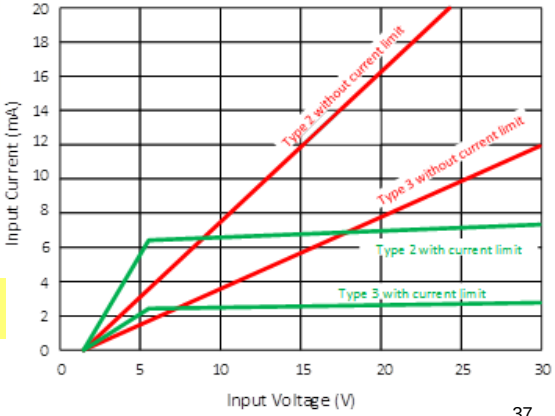

ISO121x operates ~40 C cooler vs. traditional solutions

Texas Instruments

Replacing the TVS with a Filter Capacitor (Cin) Can Reduce Cost While Adding Noise Immunity – See Datasheet

Typical Application (continued)

8.2.2.2 Surge, ESD and EFT Tests

Digital input modules are subject to surge (IEC 61000-4-5), electrostatic discharge or ESD (IEC 61000-4-2) and electrical fast transient or EFT (IEC 61000-4-4) tests. The surge impulse waveform has the highest energy and the widest pulse width, and is therefore the most stringent test of the three.

Figure 10 shows the application diagram for Type 1 and 3 systems. For a 1-kV_{PP} surge test between the input terminals and protection earth (PE), a value of 1 kΩ for R_{THR} and 10 nF for C_{IN} is recommended. Table 3 lists a summary of recommended component values to meet different levels of EMC requirements for Type 1 and 3 systems. A 2-nF capacitor between FGND and PE is assumed.

Table 3. Surge, IEC ESD and EFT, Test

IEC 61131-2 TYPE	R_{SENSE}	R_{TH}	C_{IN}	SURGE			IEC ESD	IEC EFT
				LINE TO PE	LINE TO LINE	LINE TO FGND		
Type 1	562	3 kΩ	10 nF	±1 kV	±1 kV	±1 kV	±6 kV	±4 kV
Type 3	562	1 kΩ	10 nF	±1 kV	±1 kV	±500 kV	±6 kV	±4 kV
			330 nF	±1 kV	±1 kV	±1 kV	±6 kV	±4 kV

For higher voltage levels of surge tests or for faster systems that cannot use a large value for C_{IN}, TVS diodes or varistors can be used to meet EMC requirements. Type 2 systems that use a smaller value for R_{THR} may also require TVS diodes or varistors for surge protection. Figure 12 shows an example usage of TVS diodes for surge protection. The recommended components for surge protection are CGA0603MLA-31900E (Varistor, Bourns), SMF36A (TVS, Littelfuse) and GSOT36C (TVS, Vishay). Varistors are less-expensive alternatives to TVS diodes.

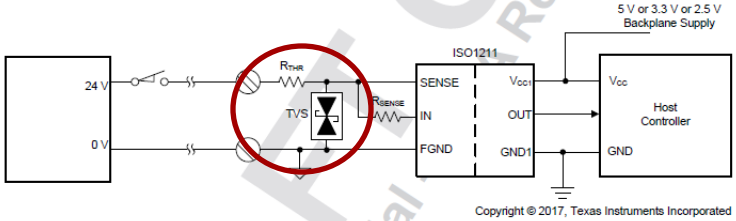

Figure 12. TVS Diodes Used Instead of a Filtering Capacitor for Surge Protection in Faster Systems

Benefits of Input Filter Capacitor Cin

- Adding Cin creates a Low Pass RC filter with Rthr for noisy signals.
- -20dB of noise attenuation with Rthr=562 and Cin=2uF
- Cin can eliminate the need for an input TVS diode clamp.

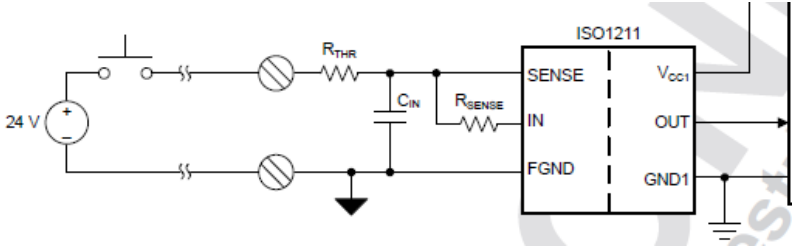

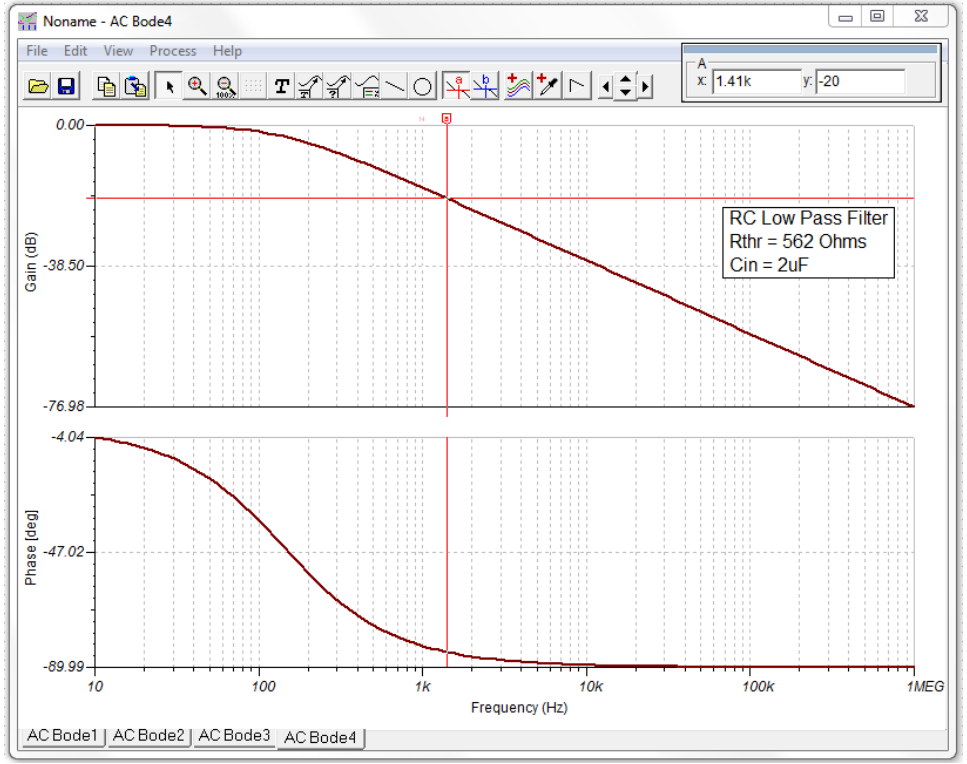

Better Noise Margins – Low Thresholds and Hysteresis

Opto-Coupler

Usually opto-coupler based inputs have very high variation in thresholds, or very high current at 30V input

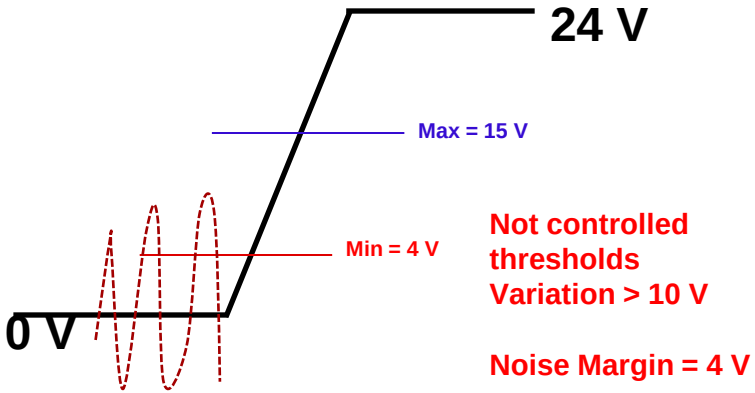

Not controlled thresholds Variation > 10 V

Noise Margin = 4 V

ISO121x

(Over recommended operating conditions unless otherwise noted).

PARAMETER		TEST CONDITIONS	MIN	TYP	MAX	UNIT
VOLTAGE TRANSITION THRESHOLD ON FIELD SIDE						
V_{IL}	Low level threshold voltage at module input (including R_{THR}) for output high	R_{SENSE} = 562 Ω, R_{THR} = 0 Ω, see Figure 11	6.5	7		V
		R_{SENSE} = 562 Ω, R_{THR} = 1 kΩ, see Figure 11	8.7	9.2		
		R_{SENSE} = 562 Ω, R_{THR} = 4 kΩ, see Figure 11	15.2	15.8		
V_{IH}	High level threshold voltage at module input (including R_{THR}) for output low	R_{SENSE} = 562 Ω, R_{THR} = 0 Ω, see Figure 11		8.2	8.55	V
		R_{SENSE} = 562 Ω, R_{THR} = 1 kΩ, see Figure 11		10.4	10.95	
		R_{SENSE} = 562 Ω, R_{THR} = 4 kΩ, see Figure 11		17	18.25	
V_{HYS}	Threshold voltage hysteresis at module input	R_{SENSE} = 562 Ω, R_{THR} = 0 Ω, see Figure 11	1	1.2		V
		R_{SENSE} = 562 Ω, R_{THR} = 1 kΩ, see Figure 11	1	1.2		
		R_{SENSE} = 562 Ω, R_{THR} = 4 kΩ, see Figure 11	1	1.2		

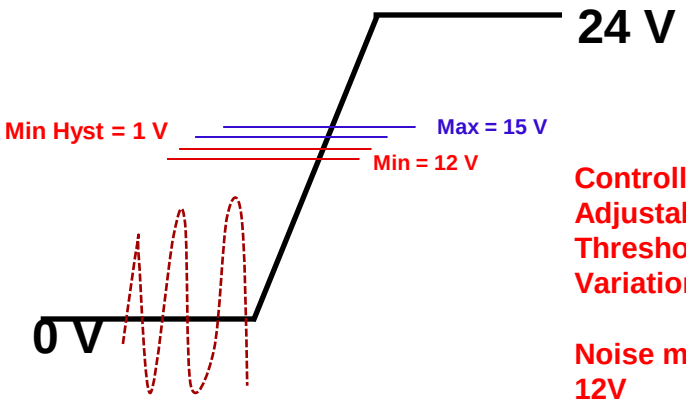

Controlled and Adjustable Thresholds Variation = 3 V

Noise margin = 12V

EVM Schematic

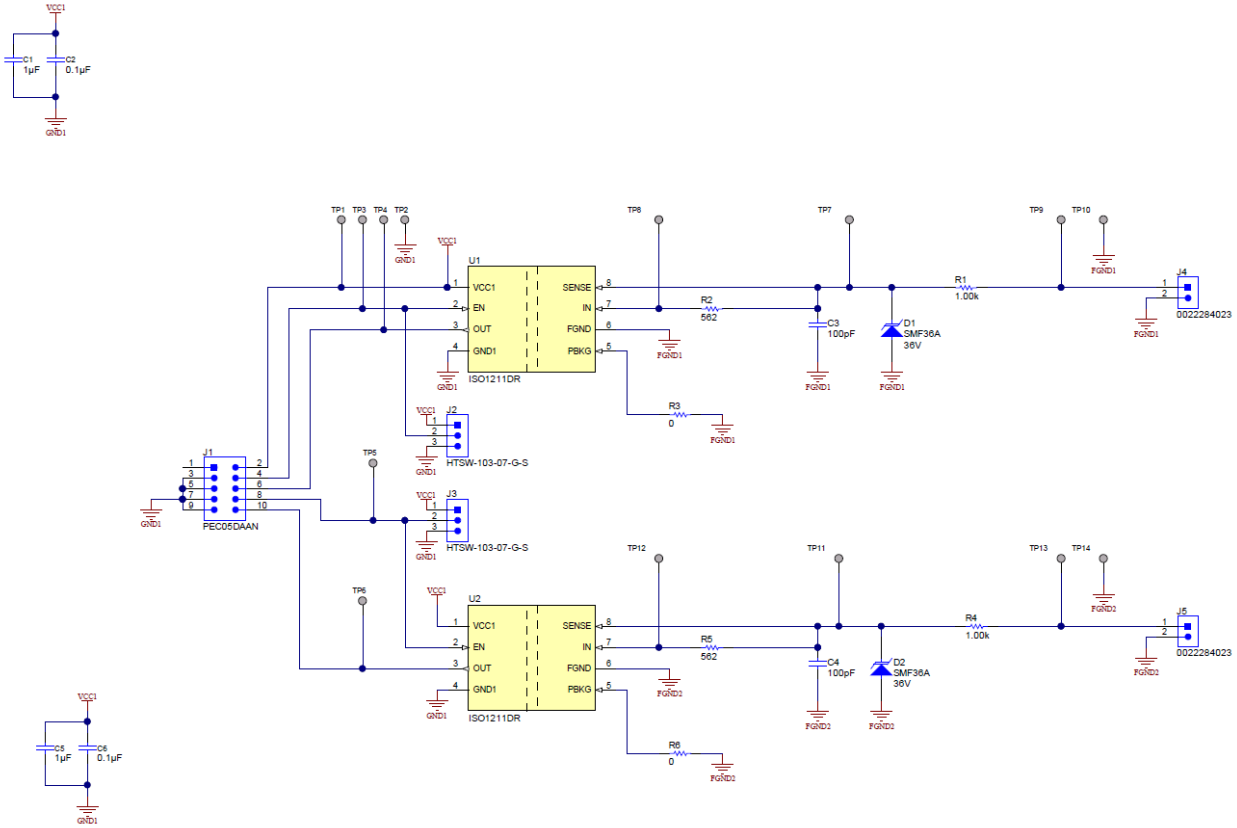

Other Uses for ISO1211 / ISO1212

ISO121x in Motor Drives: Fast Digital Input, Position FB

Fast Digital Input (DI):

- AC and Servo Motor Drives may include fast Digital Input (up-to 1MHz).

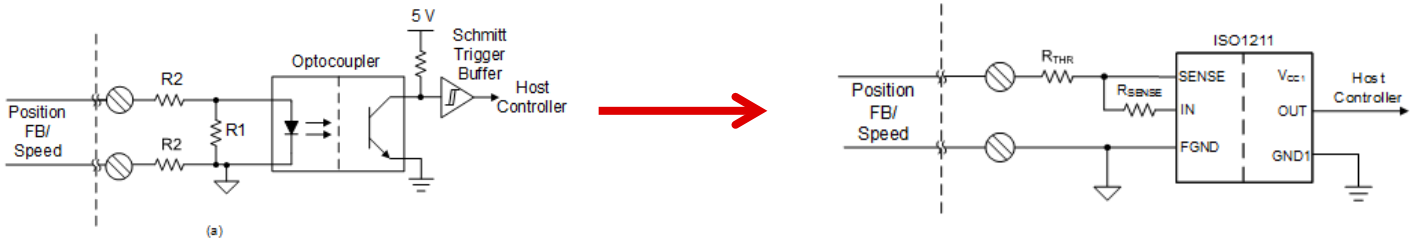

- These digital inputs could be used for position feedback, but there may be other uses too.

- Fast opto-couplers are expensive – 30 cents to 80 cents depending on speed. ISO1212 can be cost-competitive, or even cheaper, and bring other benefits (controlled thresholds, controlled current limit, noise immunity, no-aging)

ISO121x in Motor Drives: STO

STO (Safe Torque Off):

- Safe Torque off is a safety function implemented in most drives. This is used as an emergency stop for the motor. This is usually a 24-V input.
- These signals are high by default and implemented with opto-couplers.
  - Default High is used since this automatically provides wire break – wire break will assert STO and stop the motor.
- ISO1212 or ISO1211 provide a better alternative for STO.

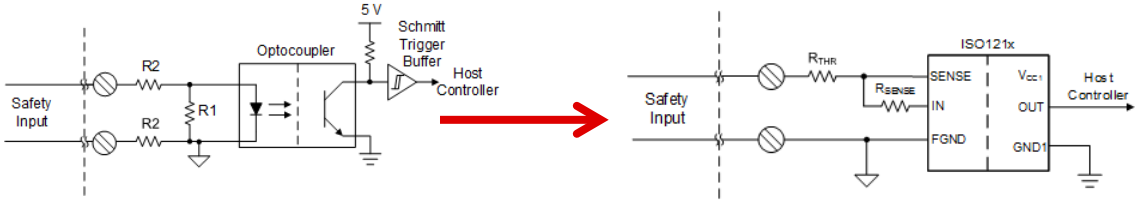

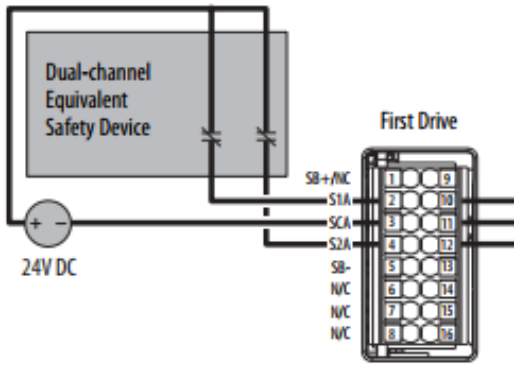

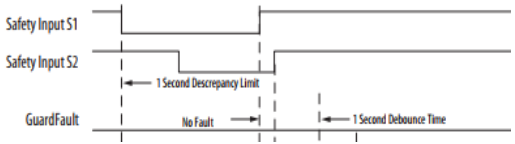

- Key benefits of ISO1212 vs. Optocouplers for STO:
  - Precise voltage thresholds and hysteresis for noise immunity.
  - Lower FIT (Failure in Time): ISO121x has 10-20 times lower FIT than optocouplers.
  - **No Aging : Since STO signals are always ON, optocouplers have a greater risk of aging.**

110V/220V DC Detection

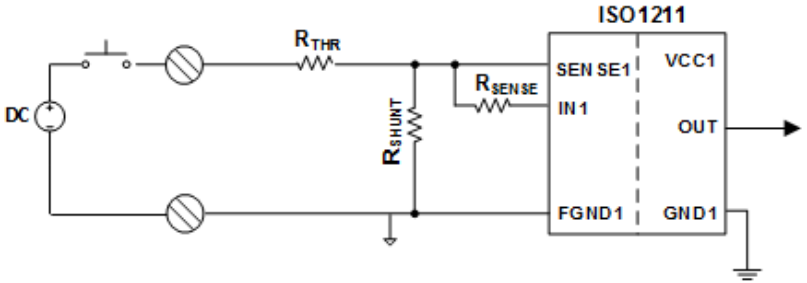

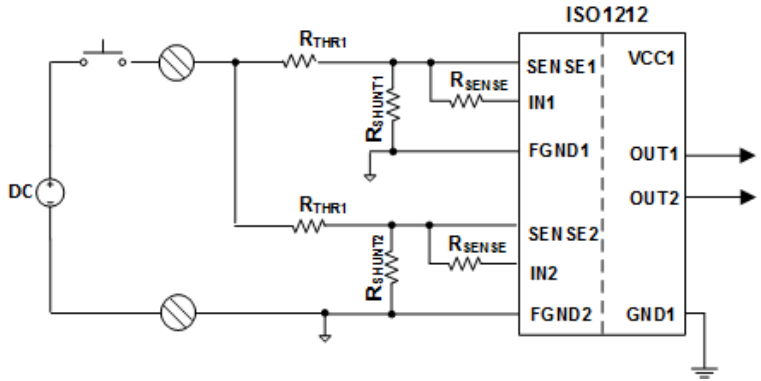

110 V DC operation:

R_{SENSE} = 562 Ohm, R_{SHUNT} = 60 k, R_{THR} = 20 k

Threshold voltage = 55 V; Max Input voltage = 120 V.

Input current at 120V = 3.5 mA

220 V DC operation:

R_{SENSE} = 562 Ohm, R_{SHUNT} = 30 k, R_{THR} = 40 k

Threshold voltage = 100 V; Max Input voltage = 230 V

Input current at 230 V = 4.5 mA

Multi-level detection with ISO1212:

Channel 1 set for 220V detection

Channel 2 set for 110V detection… and so on…

Benefits:

- Very compact design, lower component count
- Low current draw
- Precise and adjustable voltage threshold.

Using ISO1212 for 110/220 VAC detection

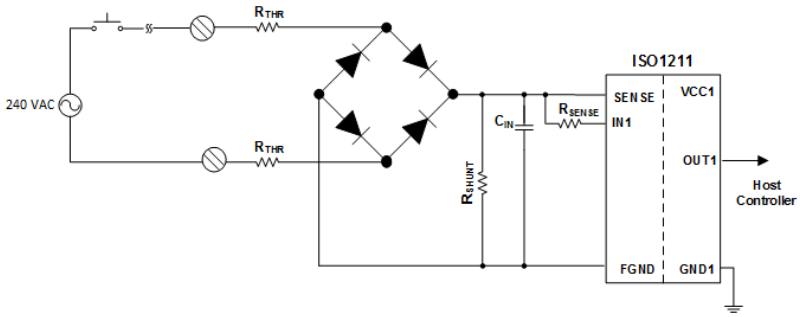

110 V AC operation:

R_{SENSE} = 562 Ohm, R_{SHUNT} = 30 k, R_{THR} = 20 k

Threshold voltage = 76 VAC; Max Input voltage = 170 VAC.

Peak Input current at 120VAC = 4.6 mA

220 V AC operation:

R_{SENSE} = 562 Ohm, R_{SHUNT} = 22 k, R_{THR} = 40 k

Threshold voltage = 150 VAC; Max Input voltage = 300 VAC

Input current at 300 VAC = 5 mA

Benefits:

- Operates up to 300 VAC (or 430 VDC)
- Very compact design, lower component count
- Low current draw
- Precise and adjustable voltage threshold.

ISO121x: Benefits and Applications

- Key Benefits of ISO121x for Digital Input Designs:
  - No isolated supply needed. Operates just like an optocoupler, but at much lower current.
  - Simple to design – Easy adjustment for IEC61131-2 Type 1, 2, and 3.
  - Integrated Current Limit - Saves Power - Lower Board Temperatures.
  - Well controlled thresholds, noise immunity.
  - Can be used for 48-V,110V, 240V DC and AC digital input designs.
  - +/-60V standoff for safety systems – current limit holds till 60V.
  - Higher Speed – for faster interfaces, encoders and position feedback.
  - “Enable” function reduces wires to the microcontroller.
  - Capable of Sourcing, Sinking and Sink/Source Operation.
  - Wire-break detection is possible: http://www.ti.com/tool/tida-01509

- Key Applications:
  - 24-V Digital Input Modules – sink, source, or sink-source types
  - channel-to-channel or group isolation.
  - Safety Digital Input Modules.
  - High Speed Digital Inputs.
  - Isolated Comparator / Isolated Supply Monitor.
  - -48V voltage detection in Telecom Power Supplies.
  - 48V, 110V, 220/240V DC and AC modules.

Tech Notes:

1. How To Simplify Isolated 24-V PLC Digital Input Module Designs
2. How to Improve Speed and Reliability of Isolated Digital Inputs in Motor Drives
3. How to Design Isolated Comparators for ±48V, 110V and 240V DC and AC Detection

Agenda

- Introduction to Isolation standards and terminology.
- TI Isolators Physical Construction and Circuit Architectures.
- TI Capacitive Isolation Barrier Quality and Lifetime Testing
- New Digital Input Receiver with Isolation – ISO1211 & ISO1212
- **Isolated Data + Isolated Power - ISOW784x**
- Isolation Needs by Industry Applications

ISO-Watt

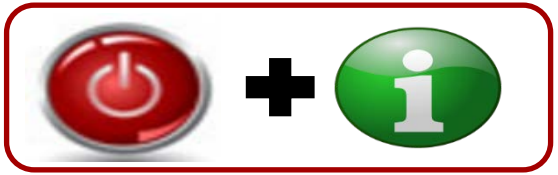

- **What is it?**
  - Reinforced digital isolator + transceiver solution with fully integrated DC-DC power supply
- **Simplicity**
  - Accelerates system design and deployment
  - WW safety standards compliance on ISO + Power with Single-chip
- **Reliability**
  - Fully qualified single-chip solution with known lifetime expectations
  - 16-pin WB SOIC form factor provides excellent board-level reliability
- **EMC hardened**
  - Best in class Electro-magnetic Emission and Immunity
- **Size & cost advantages**
  - Reduced system BOM costs due to high integration
  - Smallest solution for isolated power + data

ISOW784x: Single-chip reinforced isolator with integrated power

ISOW784x is the industry's highest efficiency, lowest emissions **reinforced isolator with integrated power and data**. Highest immunity and lowest power loss combine to enable more robust and reliable industrial systems.

Single-chip reinforced isolated power and data up to 100 Mbps

Eighty percent higher efficiency than competitive solutions (at 400mW load)

Over 10 db lower radiated emissions than competition at 400mW load for CISPR22 testing

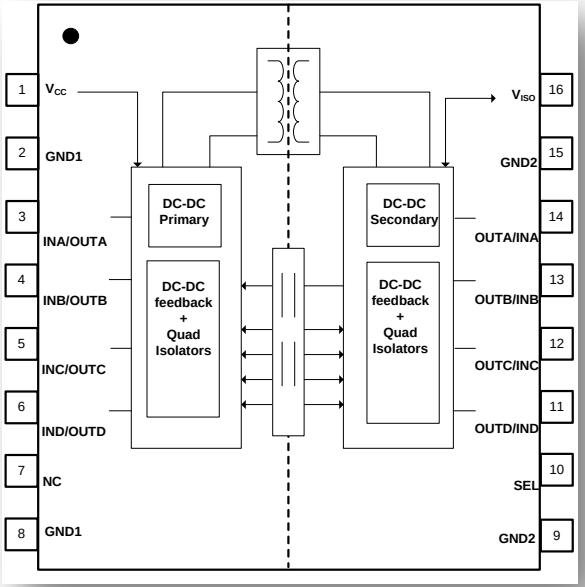

ISOW784x:

Digital Isolators with Integrated DC-DC Converter

Features

- **Integrated Power with Laminate transformers**
  - 0.65W power, high efficiency
  - Configurable input/output levels
    - 5V to 5V; 5V to 3.3V; => 130mA load current
    - 3.3V to 3.3V => 70mA load current
  - Line regulation: 0.2%
  - Load regulation: 1%
  - Soft Start
- **4 Integrated digital isolation channels**
  - 100Mbps, 13ns prop-delay
- **Immunity and Isolation Certifications**
  - Lowest radiated emissions and highest immunity.
  - Robust EMI for IEC61000-4-x ESD, EFT events
  - ESD: +/-8kV HBM
  - 5000 Vrms Isolation rating (UL 1577)
  - 10000 Vpk Surge VDE Reinforced Isolation
  - 1414 Vpk Working (DIN V VDE V 0884-10)
  - 100kV/us min CMTI
- **Power and Package**
  - Wide input Supply Range: 3V to 5.5V
  - 16-pin Wide SOIC Package (>8.0mm Creepage)
  - Extended Temp: -40 to 125 ºC

Applications

- Industrial Automation
- Motor Control
- Grid Infrastructure
- Isolated Power Supplies
- Test and Measurement

Benefits

- Integrated solution enables smaller BOM, reduced board space and helps with easier system certification.
- High drive capability to power peripheral interfaces
- Lowest power consumption reduces device operating temperature enabling higher power delivery, higher channel counts and longer system lifetime than other integrated solutions.
- Soft start enables minimal overshoot current, controlled small inrush current.
- Over 10 db lower radiated emissions lowers system noise, improves system signal integrity, supports reliable operation of the system in harsh environments.
- Highest level of immunity reduces effect of high-voltage events on the system.
- Pin-to-pin with ADuM6401 and ADuM5401 to allow ease of upgrade

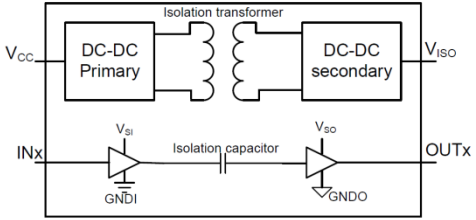

V_{CC} is primary supply voltage referenced to GND1, V_{ISO} is isolated supply voltage referenced to GND2.
V_{SI}/V_{SO} can be either V_{CC} or V_{ISO} depending on channel direction.
V_{SI} is input-side supply voltage referenced to GNDI and V_{SO} is output-side supply voltage referenced to GNDO.

ISOW784x Portfolio:

Digital Isolators with Integrated DC-DC Converter

Device	Forward Channels	Reverse Channels	Package	Fail Safe High Orderable	Fail Safe Low Orderable
ISOW7840	4	0	16-SOIC (DWE)	ISOW7840DWE	ISOW7840FDWE
ISOW7841	3	1	16-SOIC (DWE)	ISOW7841DWE	ISOW7841FDWE
ISOW7842	2	2	16-SOIC (DWE)	ISOW7842DWE	ISOW7842FDWE
ISOW7843	1	3	16-SOIC (DWE)	ISOW7843DWE	ISOW7843FDWE
ISOW7844	0	4	16-SOIC (DWE)	ISOW7844DWE	ISOW7844FDWE

ISOW7840, ISOW7840F
16-Pin DWE Package
Top View

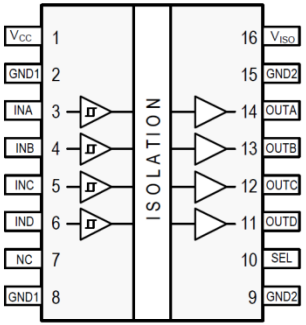

ISOW7841, ISOW7841F
16-Pin DWE Package
Top View

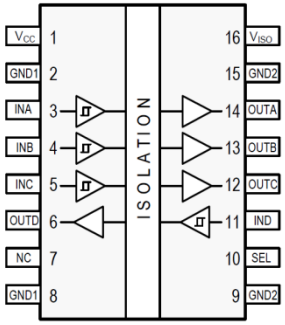

ISOW7842, ISOW7842F
16-Pin DWE Package
Top View

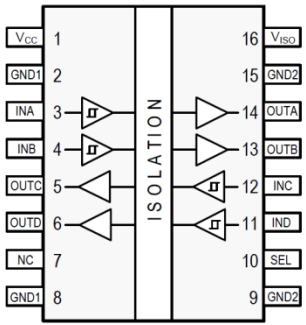

ISOW7843, ISOW7843F
16-Pin DWE Package
Top View

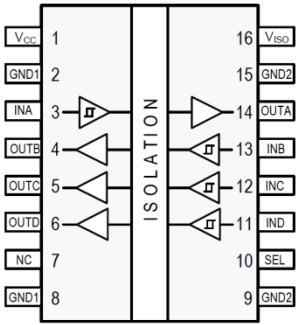

ISOW7844, ISOW7844F
16-Pin DWE Package
Top View

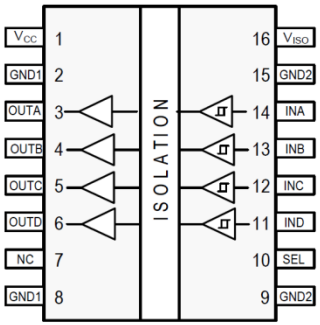

ISOW784x Performance:

Digital Isolators with Integrated DC-DC Converter

Power Transfer Efficiency: ISOW7841 vs Competition

ISOW7841 is 80% more efficient

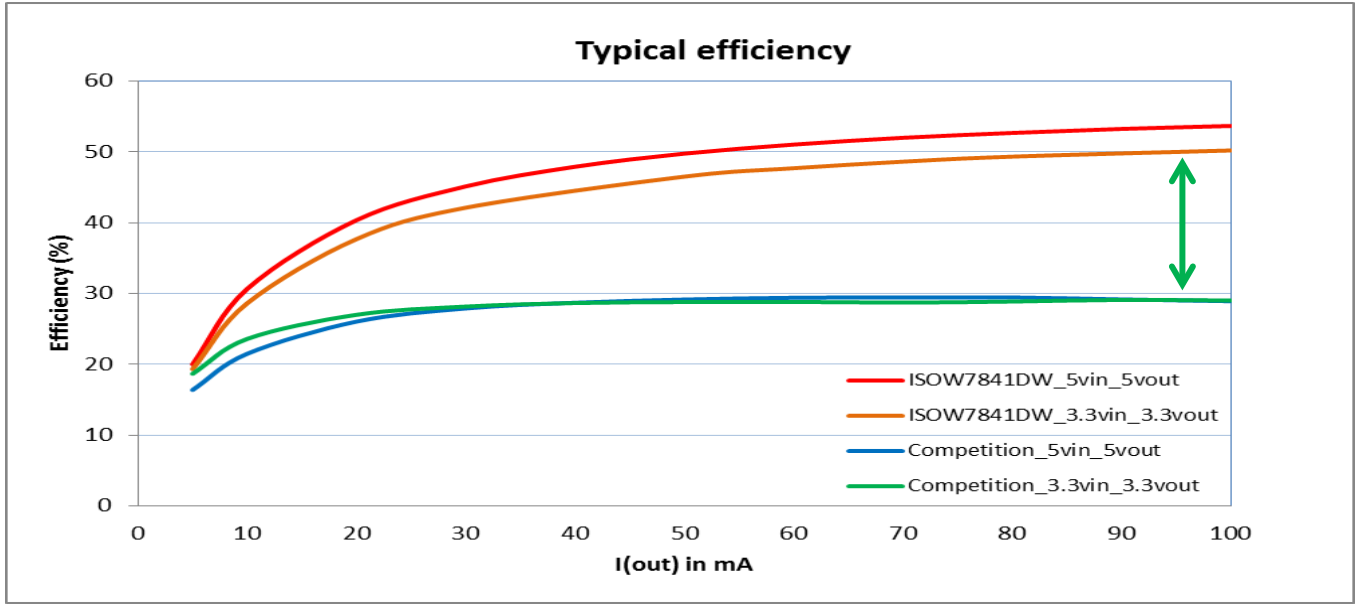

* TI v/s Competition efficiency comparison done with same setup in TI lab.

ISOW’s efficiency makes microPLC possible

Image showing setup

Infra-Red image showing hotspots

ISOW7841

Competition

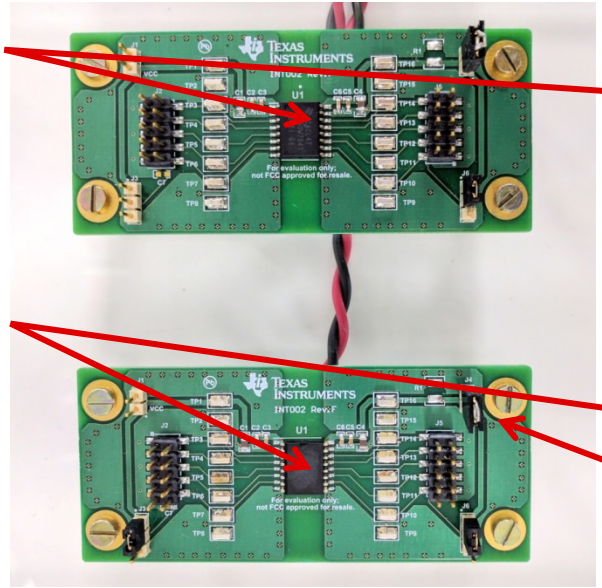

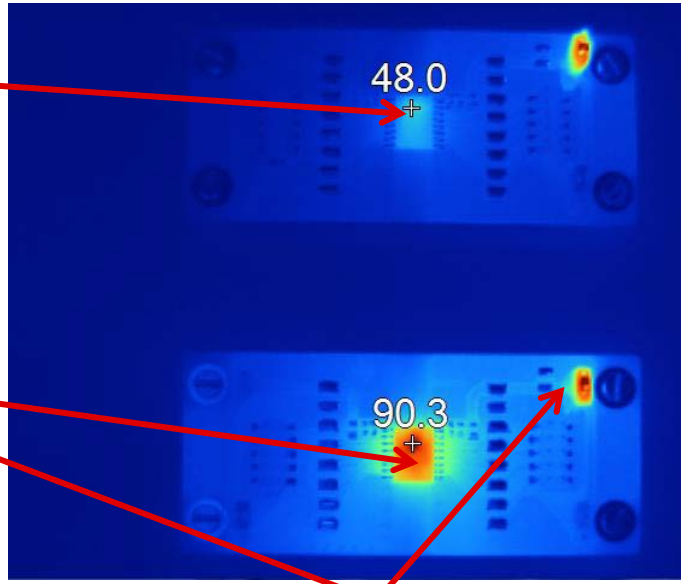

400mW Load

With PLCs getting smaller and more dense, thermal performance is critical.

- TI is **~40ºC** cooler than the competition at full load.

ISOW784x Performance:

Digital Isolators with Integrated DC-DC Converter

Radiated Emissions: ISOW7841 v/s Competition

ISOW7841 is >10dB lower than the competition

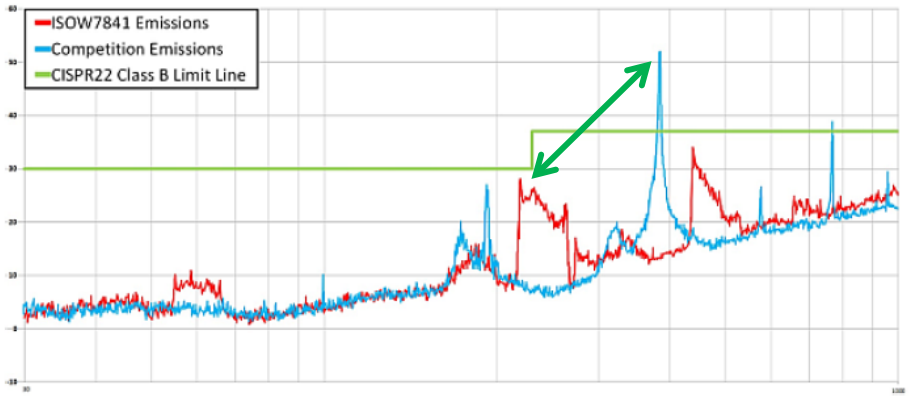

Figure 4: Radiated emissions of the ISOW7841 and a competitive device at 5V input and 80mA load

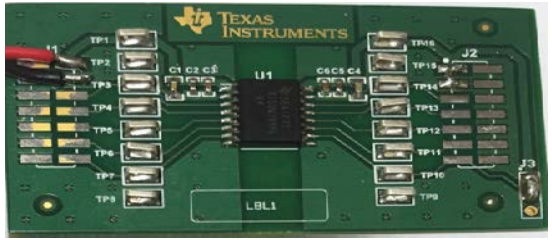

* TI v/s Competition emission comparison done with same setup (no stitching cap) at 400mW load at external Certified Test Facility

ISOW Emissions

slla368a

- ISOW78xx has lower radiated emissions than competition
- ISOW78xx has several proven methods to reduce radiated emissions in a system
  - Use 3.3V Input supply when possible
  - Utilize input and output decoupling caps, ferrite beads
  - Interlayer Side 1-to-Side 2 Capacitor
  - Connect controller side to protection earth
  - Use common mode chokes

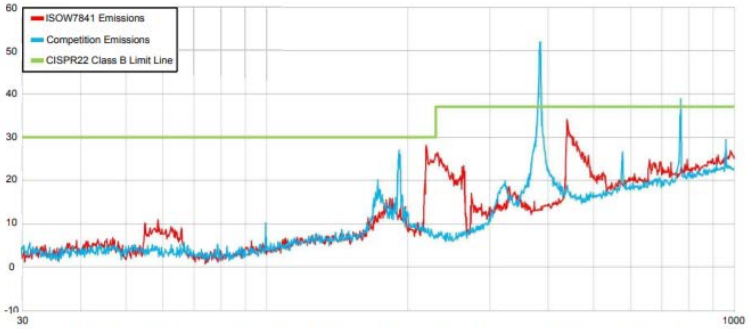

Figure 3. Radiated Emissions of the ISOW7841 vs a Competitive Device at 5-V Input and 80-mA Load

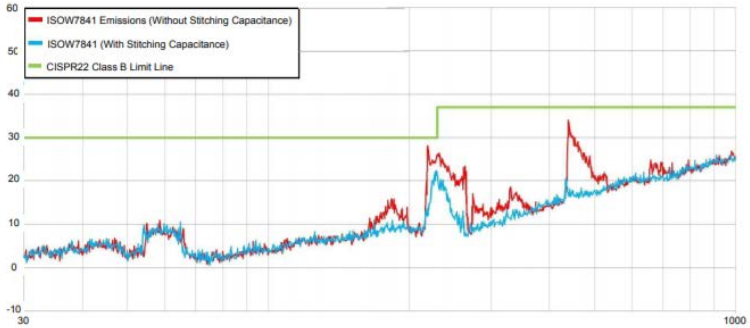

Figure 10. ISOW7841 Emissions With and Without a 30-pF Stitching Capacitance at a 5-V Input and 80-mA Load Current

ISOW784x Collateral

Content title	Content type	Link to content
Fully Integrated Signal and Power Isolation – Applications and Benefits	White Paper	Link to white paper
How to achieve low radiated emissions with fully integrated data and power isolation	Contributed article	Link to article
Isolated RS-485 With Integrated Signal and Power Reference Design	TI Design	Link to TI Design
Isolated RS-232 With Integrated Signal and Power Reference Design	TI Design	Link to TI Design
Wide input, Binary Module with Digital isolator (reinforced isolation, integrated power converter) and MCU Reference Design	TI Design	Link to TI Design
8-ch High Voltage Analog Input Module with ISOW7841 Reference Design	TI Design	Link to TI Design
Reinforced isolation and power: an integration story	Video	Link to video
Cool down your industrial system design with integrated data and power isolation	Blog	Link to blog

ISOW7841 TI Designs for RS485, RS232, and CAN

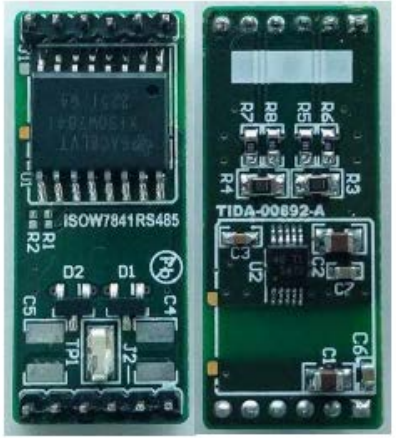

TIDA-00892:
ISOW7841+RS485 (HVD1473)
Released

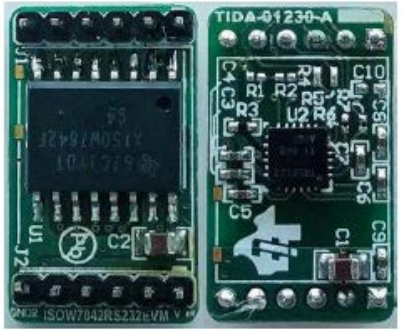

TIDA-01230:
ISOW7841+RS232 (TRS3122E)
Released

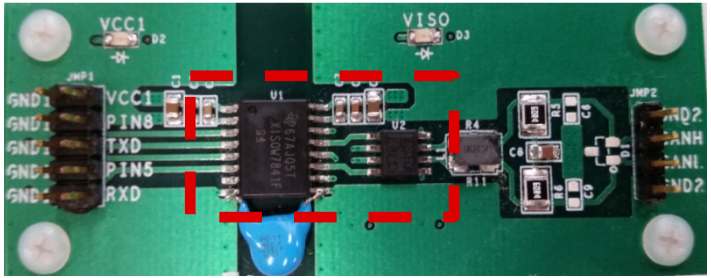

TIDA-00893
ISOW7841+CAN (TCAN1042)
Release: Apr'17

Benefits over competing integrated solutions:

1. **Higher Efficiency – 125C operation.**
2. **Lower Emissions.**
3. **Compact designs using both sides of the board possible.**
4. **Higher power delivery – can support multiple transceivers.**
5. **Flexibility – choice of transceivers.**

Agenda

- Introduction to Isolation standards and terminology.
- TI Isolators Physical Construction and Circuit Architectures.
- TI Capacitive Isolation Barrier Quality and Lifetime Testing
- New Digital Input Receiver with Isolation – ISO1211 & ISO1212
- Isolated Data + Isolated Power - ISOW784x
- **Isolation Needs by Industry Applications**

Isolation Products

Digital Isolators

REINFORCED*

Reinforced Isolation, Highest Immunity/Isolation, Wide & Extra-Wide(14mm) Body Packages (SOIC–16DW, SOIC-16DWW)

ISO7810 5.7kVrms Highest Immunity FS Hi/Lo, Low EMI CMTI > 100kV/us 100 Mbps SOIC-16W	**ISO7820** 5.7kVrms Highest Immunity FS Hi/Lo, Low EMI CMTI > 100kV/us 100 Mbps SOIC-16W / DWW	**ISO7821** 5.7kVrms Highest Immunity FS Hi/Lo, Low EMI CMTI > 100kV/us 100 Mbps SOIC-16W / DWW	**ISO7830** 5.7kVrms Highest Immunity FS Hi/Lo, Low EMI CMTI > 100kV/us 100 Mbps SOIC-16W / DWW	**ISO7831** 5.7kVrms Highest Immunity FS Hi/Lo, Low EMI CMTI > 100kV/us 100 Mbps SOIC-16W / DWW	**ISO7840** 5.7kVrms Highest Immunity FS Hi/Lo, Low EMI CMTI > 100kV/us 100 Mbps SOIC-16W / DWW	**ISO7841** 5.7kVrms Highest Immunity FS Hi/Lo, Low EMI CMTI > 100kV/us 100 Mbps SOIC-16W / DWW	**ISO7842** 5.7kVrms Highest Immunity FS Hi/Lo, Low EMI CMTI > 100kV/us 100 Mbps SOIC-16W / DWW

Reinforced Isolation, Wide & Narrow Body Packages (SOIC–16DW, SOIC-8D, QSOP-16DBQ)

ISO7710 5kVrms High Immunity FS Hi/Lo, Low EMI 100 Mbps SOIC-16W, SOIC-8N	**ISO7720** 5kVrms High Immunity FS Hi/Lo, Low EMI 100 Mbps SOIC-16W, SOIC-8N	**ISO7721** 5kVrms High Immunity FS Hi/Lo, Low EMI 100 Mbps SOIC-16W, SOIC-8N	**ISO7730** 5kVrms High Immunity FS Hi/Lo, Low EMI 100 Mbps SOIC-16W, QSOP-16	**ISO7731** 5kVrms High Immunity FS Hi/Lo, Low EMI 100 Mbps SOIC-16W, QSOP-16	**ISO7740** 5kVrms High Immunity FS Hi/Lo, Low EMI 100 Mbps SOIC-16W, QSOP-16	**ISO7741** 5kVrms High Immunity FS Hi/Lo, Low EMI 100 Mbps SOIC-16W, QSOP-16	**ISO7742** 5kVrms High Immunity FS Hi/Lo, Low EMI 100 Mbps SOIC-16W, QSOP-16

BASIC*

Basic Isolation, Small Package (SOIC–8D, QSOP-16DBQ)

ISO7710 3kVrms High Immunity FS Hi/Lo, Low EMI 100 Mbps SOIC-8N	**ISO7720** 3kVrms High Immunity FS Hi/Lo, Low EMI 100 Mbps SOIC-8N	**ISO7721** 3kVrms High Immunity FS Hi/Lo, Low EMI 100 Mbps SOIC-8N	**ISO7730** 2.5kVrms High Immunity FS Hi/Lo, Low EMI 100 Mbps QSOP-16	**ISO7731** 2.5kVrms High Immunity FS Hi/Lo, Low EMI 100 Mbps QSOP-16	**ISO7740** 2.5kVrms High Immunity FS Hi/Lo, Low EMI 100 Mbps QSOP-16	**ISO7741** 2.5kVrms High Immunity FS Hi/Lo, Low EMI 100 Mbps QSOP-16	**ISO7742** 2.5kVrms High Immunity FS Hi/Lo, Low EMI 100 Mbps QSOP-16

CHANNEL COUNT

1 / 0	2 / 0	1 / 1	3 / 0	2 / 1	4 / 0	3 / 1	2 / 2
SINGLE	DUAL		TRIPLE			QUAD	

*Reinforced/Basic per VDE standard

Existing | New | Preview

Q100

Texas Instruments

Digital Isolators (6ch)

REINFORCED*

Reinforced Isolation, Wide & Narrow Body Packages (SOIC–16DW, QSOP-16DBQ)

ISO7760	ISO7761	ISO7762	ISO7763
5kVrms	5kVrms	5kVrms	5kVrms
High Immunity	High Immunity	High Immunity	High Immunity
FS Hi/Lo, Low EMI	FS Hi/Lo, Low EMI	FS Hi/Lo, Low EMI	FS Hi/Lo, Low EMI
100 Mbps	100 Mbps	100 Mbps	100 Mbps
SOIC-16W, QSOP-16	SOIC-16W, QSOP-16	SOIC-16W, QSOP-16	SOIC-16W, QSOP-16

BASIC*

6 / 0 | 5 / 1 | 4 / 2 | 3 / 3

SIX CHANNEL

CHANNEL COUNT

*Reinforced/Basic per VDE standard

Existing | New | Preview | Roadmap | Q100

Texas Instruments

Isolated Interfaces

	Full Duplex RS-485	Half Duplex RS-485	Half Duplex Profibus	CAN	I2C	LVDS	IO
REINFORCED*						**ISO7821LLS** LVDS to LVDS TRx for DC balanced system 5.7kVrms V_{ISO} 50-150Mbps SOIC-16W **ISO7821LL** LVDS to LVDS TRx 5.7kVrms V_{ISO} 100Mbps SOIC-16W **ISO7820LL** LVDS to LVDS TRx 5.7kVrms V_{ISO} 100Mbps SOIC-16W	
BASIC*	**ISO3086(T)** BUS VCC = 5V 20 Mbps, Opt. Xfmr Driver SOIC-16W **ISO3080** BUS VCC = 5V 200 Kbps SOIC-16W **ISO35(T)** BUS VCC = 3.3V 1 Mbps Opt. Xfmr Driver SOIC-16W	**ISO3088** BUS VCC = 5V 20 Mbps, SOIC-16W **ISO3082** BUS VCC = 5V 200 Kbps 5V, SOIC-16W **ISO15** BUS VCC = 3.3V 1 Mbps SOIC-16W	**ISO1176(T)** BUS VCC = 5V 40 Mbps Opt. Xfmr Driver SOIC-16W	**ISO1050DW** BUS VCC = 5V 1 Mbps SOIC-16W **ISO1050DUB** BUS VCC = 5V 1 Mbps SOP-8GW	**ISO1541** Bi-directional Data Uni-directional Clk VCC = 3.3 - 5V, 1MHz SOIC-8N **ISO1540** Bi-directional Data Bi-directional Clk VCC = 3.3 - 5V, 1MHz SOIC-8N		**ISO1212** 2ch 24V Digital I/P Rx 3kVrms VISO 2.1-2.5mA Ilimit, 5Mbps QSOP-16 **ISO1211** 1ch 24V Digital I/P Rx 3kVrms VISO 2.1-2.5mA Ilimit, 5Mbps SOIC-8N

*Reinforced/Basic per VDE standard

Existing | New | Preview | Q100

Isolated Data and Power Portfolio

	2 / 0	2 / 1	0 / 2	4 / 0	3 / 1	2 / 2	1 / 3	0 / 4
REINFORCED*				ISOW7840 5kVrms High efficiency High Immunity FS Hi/Lo, Low EMI 100 Mbps SOIC-16W	ISOW7841 5kVrms High efficiency High Immunity FS Hi/Lo, Low EMI 100 Mbps SOIC-16W	ISOW7842 5kVrms High efficiency High Immunity FS Hi/Lo, Low EMI 100 Mbps SOIC-16W	ISOW7843 5kVrms High efficiency High Immunity FS Hi/Lo, Low EMI 100 Mbps SOIC-16W	ISOW7844 5kVrms High efficiency High Immunity FS Hi/Lo, Low EMI 100 Mbps SOIC-16W
BASIC*								
	DUAL			QUAD				

CHANNEL COUNT

*Reinforced/Basic per VDE standard

Existing | New | Preview | Q100

Texas Instruments

Isolated Data and Power Portfolio (contd)

	UP TO 0.5 W	UP TO 2W	ABOVE 2W
ISOALTED INTERFACE + INTEGRATED TRANSFORMER			
TRANSFORMER DRIVER		**SN6501** Transformer Driver 3.3V or 5V supply Idrive = 350mA (5V) SOT-23 (5 pin)	**SN6505A** Transformer Driver 2.25 to 5.5 V supply Idrive= 1A Switching freq = 150kHz SOT-23 (6 pin) **SN6505A** Transformer Driver 2.25 to 5.5 V supply Idrive= 1A Switching freq = 400kHz SOT-23 (6 pin)

*Reinforced per VDE standard

Existing | New | Preview | Q100

AMC1301/AMC1301S

Precision, ±250-mV Input, Reinforced Isolated Amplifier for Current Sensing

Features

- **Reinforced Isolation (UL1577 & VDE 0884-10)**
  - Working voltage: **1.0 kV_{RMS}, 1.5 kV_{DC}**
  - Isolation voltage: **7 kV_{PEAK} / 10 kV_{SURGE}**
  - Isolation Lifetime: **64 years**
- CMTI: **15 kV/µs (min)**
- Input Voltage Range: **±250 mV_{IN} (R_{IN}=20 kΩ)**
- Input Offset Voltage: **±200 µV (max)**
- Input Offset Drift **(max): ±3µV/°C** (AMC1301), **±4 µV/°C** (AMC1301S)
- Gain: **8.2 ± 3% (max)**
- Gain Error Drift **(max): ±50 ppm/°C** (AMC1301), **±60 ppm/°C** (AMC1301S)
- Non-Linearity: **±0.03% (max)**
- SNR: **71dB (min) @ f_{IN} = 10 kHz , BW = 100 kHz**
- Extended Temp Range: **-55 to 125°C** (AMC1301S)
- Package: **SO-8 (DWV)**

Applications

- Current and Voltage Measurement:
  - Power Monitoring
  - Inverter Applications
  - Over-Current Protection Systems

Benefits

- Pin-to-pin performance upgrade to ACPL-C79x
- Optimized input voltage range for current measurement
- Higher reliability and broader usage with wider temperature range
- Reduced power consumption on low and high-side
- Best-in-class performance with highest accuracy measurements
- 10% faster step response time
- V_{CM} Over-Range detection
- VDD1 missing detection to simplify system-level design

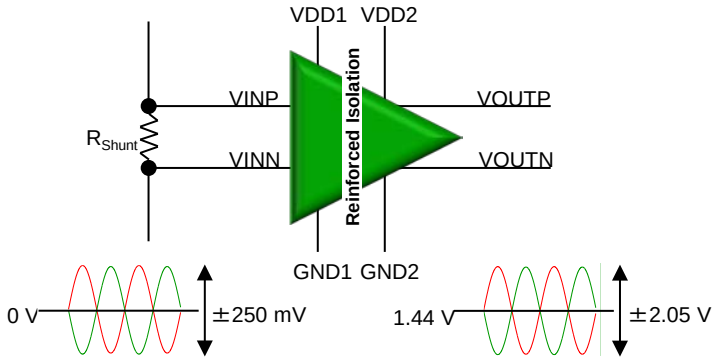

DC-PADC Isolated Amplifiers

Isolated Current and Voltage Measurement

Parameter	AMC1100	AMC1200	AMC1301	AMC1301S	AMC1311	AMC1311B
Isolation Rating	**Basic**	**Basic**	**Reinforced**	**Reinforced**	**Reinforced**	**Reinforced**
Application	Current Measurement	Current Measurement	Current Measurement	Current Measurement	Voltage Measurement	Voltage Measurement
Input Voltage Range	±250 mV	±250 mV	±250 mV	±250 mV	2 V	2 V
Isolation Working Voltage V_{IOWM} (Vrms)	800	800	1000	1000	1500	1500
Isolation Transient Overvoltage V_{IOTM} (Vpeak)	4250	4250	7000	7000	8000	8000
Small Signal Bandwidth (Typ) (kHz)	100	100	210	210	220	275
Input Offset Voltage Vos (Typ/Max) (mV)	±0.2/±1.5	±0.2/±1.5	±0.05/±0.2	±0.05/±0.2	±9.9 (max)	±1.5 (max)
Input Offset Drift TCVos (Typ/Max) (µV/°C)	±1.5/±10	±1.5/±10	±1/±3	±1/±4	±20 (typ)	±3/±15
Gain Error (Max) (%)	±1	±1	±0.3	±0.3	±1	±0.3
Gain Error drift (Max) (ppm/°C)	±56 (typ)	±56 (typ)	±50	±60	±30 (typ)	±45
Gain Nonlinearity (Max) (%)	±0.075	±0.075	±0.03	±0.03	±0.04	±0.04
CMTI (Min) (kV/µs)	2.5	10	15	15	15	75
Operating Temperature Range (°C)	-40 to 105	-40 to 105	-40 to 125	**-55 to 125**	-40 to 125	**-55 to 125**
Package	SOP-8 SOIC-8	SOP-8	SOP-8 SOIC-8	SOIC-8	SOIC-8	SOIC-8

Isolation Needs by Industry Applications

PLC

Key Specifications

- 500Vrms Working Voltage, 2.5kVrms (1s, VISO), basic isolation
- ESD (6kV-8kV) and EFT (4kV)
    - Especially on ISO-RS485 and ISOCAN
- Low power consumption (to relieve thermal constraints in compact designs)
- EMC – Immunity and Emissions
- Small packages and multi-channel configurations
- Low propagation delays (for SPI timing closure)
- Lower controller side power supply

Block Diagram

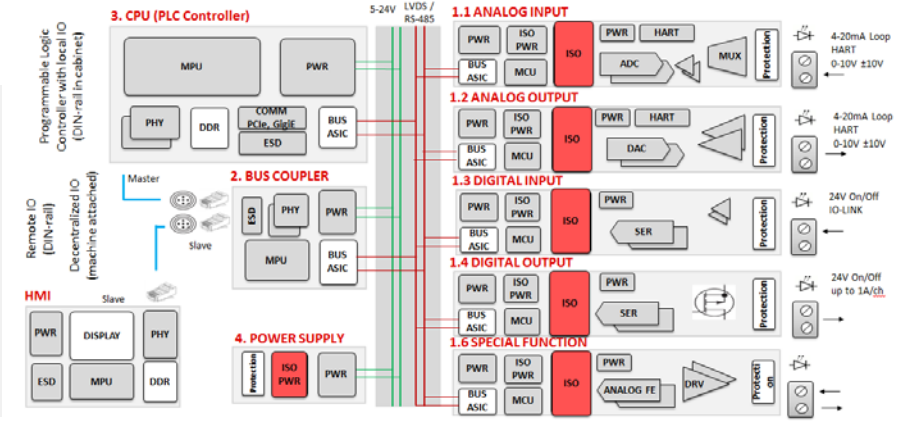

Key Parts

- ISO121x
    - Does not need field side supply
    - Fully integrated solution for digital input modules
- SN650x
    - Flexible output voltages, high efficiency (80%+), low cost, small footprint, flexible output voltages, ultra low emissions, SSC, Soft Start
- ISOWATT
    - Compact design, fully integrated power+signal isolation. Low emissions, High Efficiency, Soft start
- ISO77xx
    - 2.25V min power supply, > 8kV IEC ESD, EMC hardened, low prop delays, flexible package options (16DW, 8D, 16 DBQ), 6-channel options
- ISOCAN & ISO-RS485
    - Integrated solutions for communication module

Key Collateral

- How to design 48V, 110V, and 240V DC and AC Digital Inputs
- How To Simplify Isolated 24-V PLC Digital Input Module Designs
- Isolation for PLC blog series (coming soon)
- 96-channel ISO1212 TI Design (coming soon)

PLC System Block Diagram - Architecture

Basic Isolation ($2.5kV_{RMS}$) is sufficient with Robust EMC (RI: 10 V/m, 8kV IEC ESD, +/-4kV EFT, Class A), Small packages

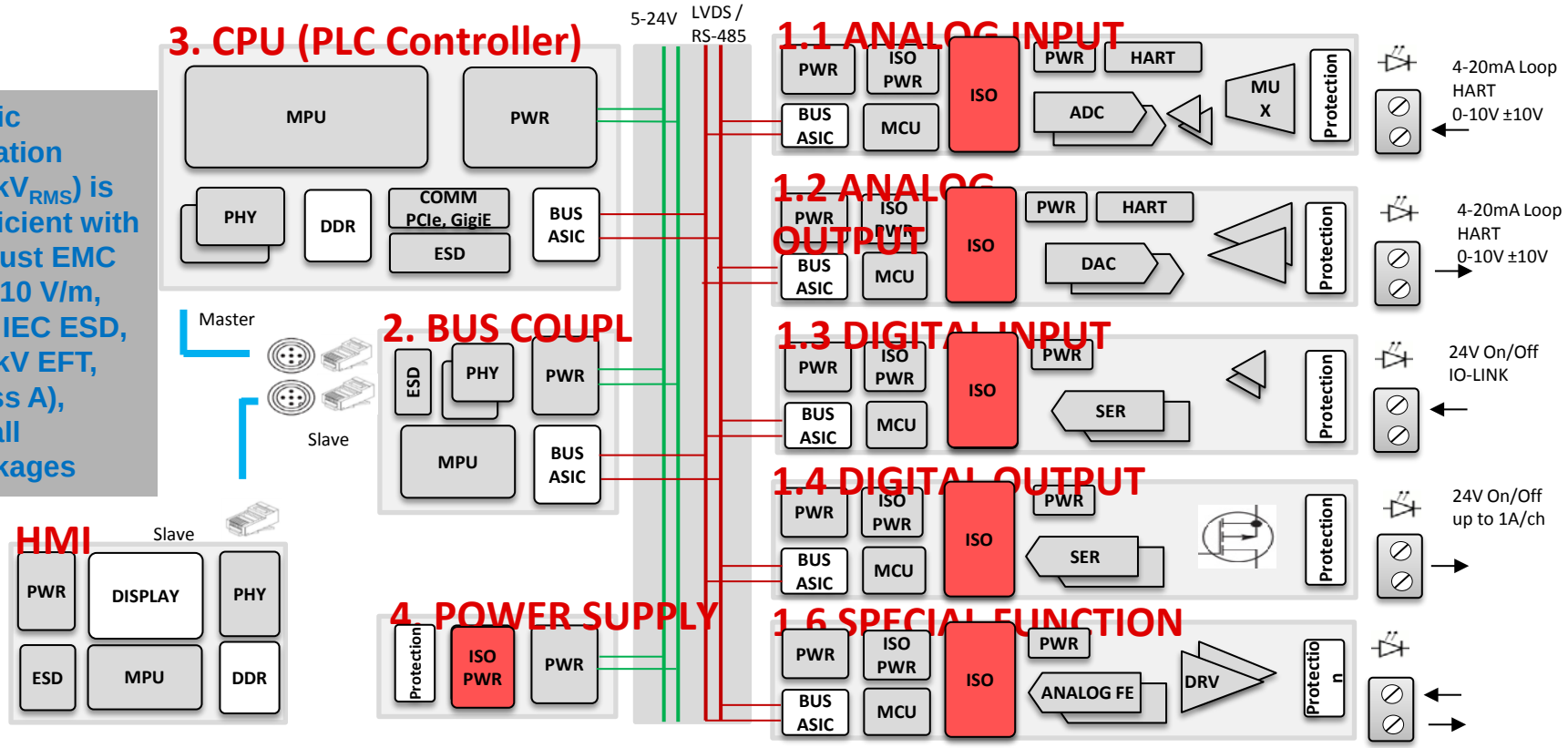

TI Isolation Products for PLC

Products	Description	Key Benefits
ISO121x	24V isolated digital input receiver with 2mA current limit	Does not need field side supply Fully integrated solution for digital input modules (1 & 2 channel configurations)
ISO77xx	100 Mbps Reinforced Digital isolators	2.25V min power supply, > 8kV IEC ESD, EMC hardened, low prop delays, flexible package options (16DW, 8D, 16 **DBQ**), 6-channel options
SN6501 and SN6505	Push-pull transformer drivers for upto 5W isolated power supplies	Flexible output voltages, high efficiency (80%+), low cost, small footprint, flexible output voltages, ultra low emissions, SSC, Soft Start
ISORS485 and ISOCAN portfolio	ISORS485 and ISOCAN portfolio	Flexible portfolio of interconnect solutions for communication module
ISOW78xx	Digital Isolators and Transceivers with Integrated Power Supply	Compact design, fully integrated power + signal isolation. Low emissions, High Efficiency, Soft start

Automotive

Key Specifications

- Automotive grade
- Wide creepage / clearance – EV Batteries increasing beyond 800V. Needs >9mm creepage/clearance isolators
- EMC Performance, standards and

Block Diagram

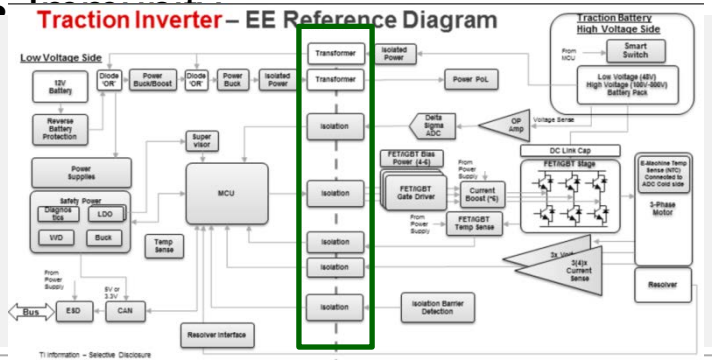

Key Parts

- **ISO1042 – Isolated CAN Transceiver with great EMC performance, small package options**
- SN650xQ1 – Automotive qualified isolated power supply. High efficiency.
- ISO77xxQ1 – Automotive qualified digital isolator in variety of package and channel options
- ISO154x-Q1 – Bidirectional I2C Isolator supporting up to 1MHz
- ISOW78xx-Q1 – Digital Isolator with Integrated Power Supply. Fully integrated solution.

Key Collateral

- Isolate your CAN systems without compromising on performance or space
- Low-Emission Designs with ISOW7841 Integrated Signal and Power Isolator
- How and when to isolate CAN (coming soon)

48V/12V Solution (Starter-Generator, Pump, AC)

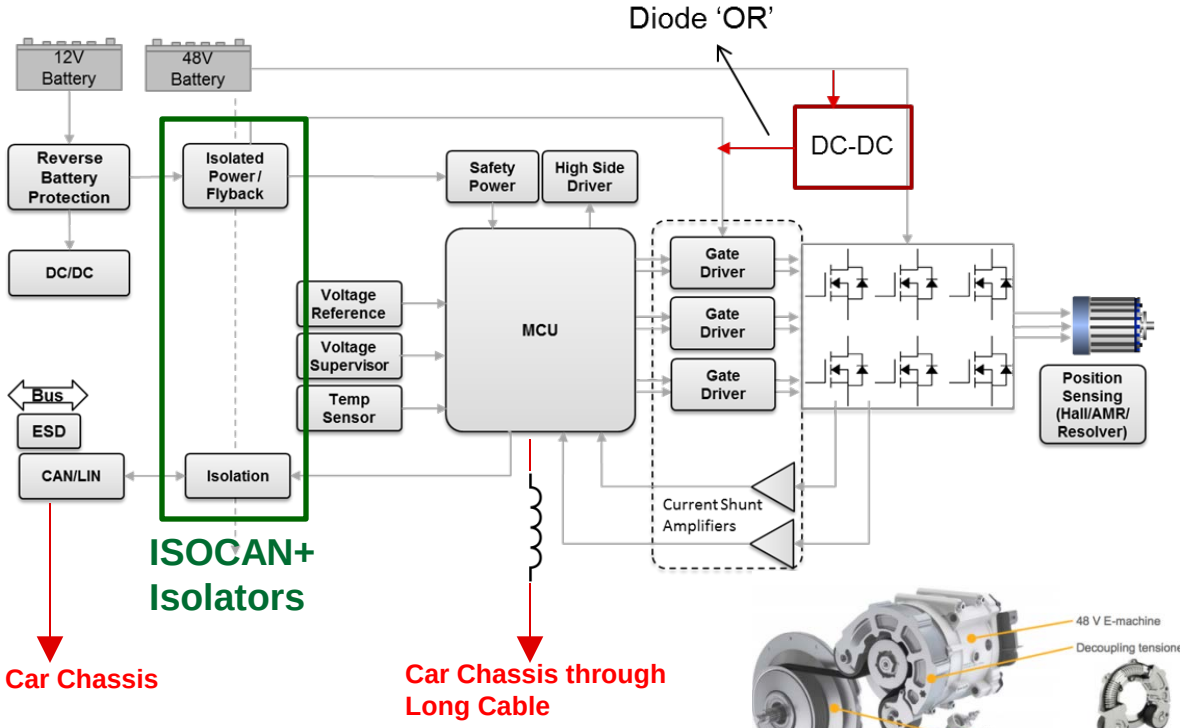

(Block diagram credit: Auto SEM team)

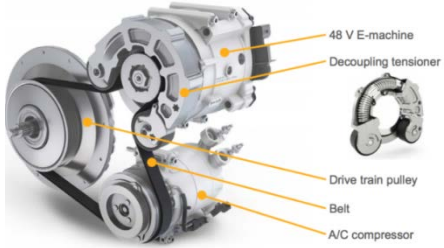

Why Isolate:

1. Noise and EMC reasons – 48V systems are high di/dt and noisy – motors/inverters. AC ground potential difference between 48V-side and 12V-side.
2. Ground lift on the 48-V system brings 48V to the CAN bus (which is for now dominated by 12-V transceivers)
3. Safety – faults/short-circuits/damage do not bring 48-V to the 12-V domain.
4. OEM mandate (due to the above reasons).

Automotive isolation use cases

Battery Control Unit → Variant 1
Dual Micro Controller

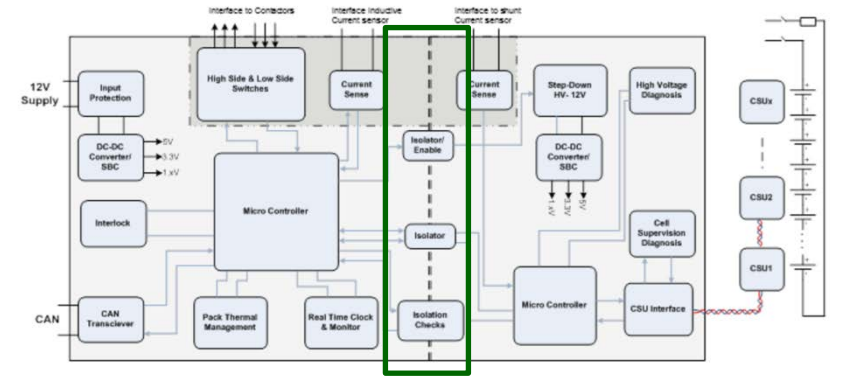

On-board Charger

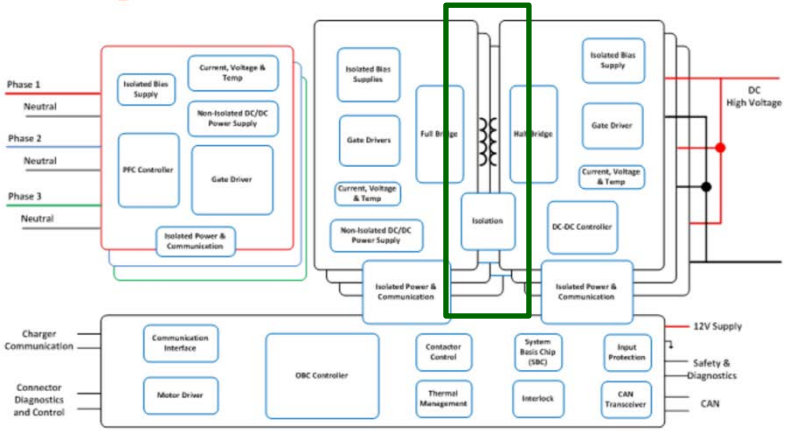

Traction Inverter – EE Reference Diagram

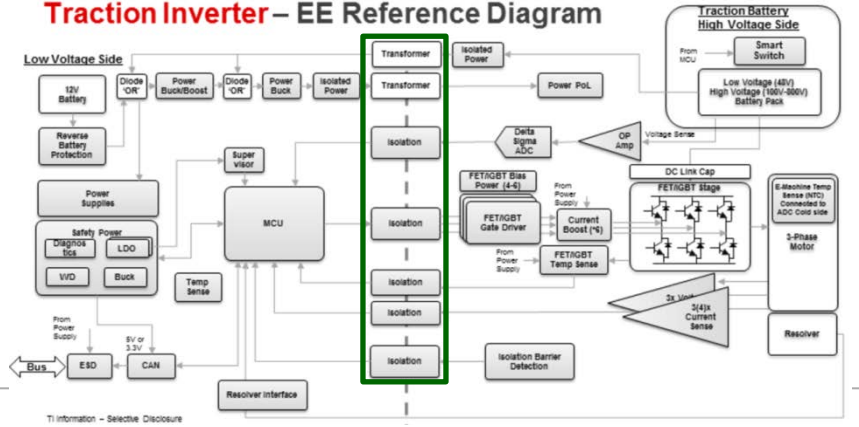

Analog IC Control (HV – LV <500W) (Half Bridge Diode Rectifier)

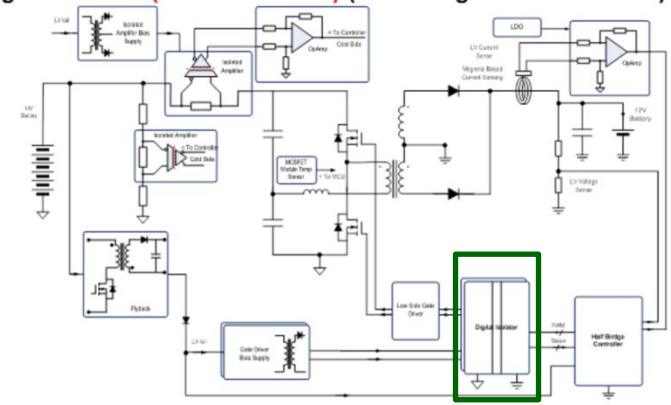

Automotive – Requirements

- Automotive grade
  - Not needed for all parts
- Ultra wide packages needed for hybrid and electric vehicles
  - 9mm of creepage and clearance may be required for 800V batteries
- High voltage isolation
  - The higher the voltage in the car, the lighter the cables.

EMC Performance

- EMC is equivalent to Robustness and critical to the Industrial and Automotive Markets
- TI's Reinforced Capacitive Isolation sets new levels for EMC & CMTI
  - Exceeds WW EMC requirements
  - 100kV/us CMTI enables next-gen driver technology - GaN/SiC FETs

EMC metric	Governing Standard	Exceeds Level
Radiated **Immunity**	IEC-61000-4-3	**Class A** > 20V/m @ < 1GHz. > 16V/m @ > 1GHz
Conducted **Immunity**	IEC-61000-4-6	**Class A** >15Vrms @ < 80MHz
Power frequency, Pulse magnetic	IEC-61000-4-8,9	**Class 5** >4kA/m
ESD	IEC-61000-4-2	**Level 4** 8kV Contact
EFT/Burst	IEC-61000-4-4	Supply/IO 4kV/2kV
Surge	IEC-61000-4-5	**Class X** - > 10kV
Emissions	EN55022/CISPR22B / SAE J1752-3 / FCC15	**Class B** At least 4dB better than competition
CMTI	IEC-60747-17	> 100kV/us min

ISO1042

Samples: now

Reinforced Isolated ±70V CAN XCVRs with Flexible Data (FD)

Features

- ISO 11898-2 and -5 compliant
- Signaling Rate Optimized for up to:
  - Standard: 2Mbps
  - CAN FD: 5Mbps
- DC Bus-Fault Protection: ± 70V
- Common mode range: ± 30V
- High CMTI: > 100kV/us
- Fast Loop Times: < 192ns
- V_{CC1} Voltage Range: 2.25V to 5.5V
- ±8kV HBM ESD and ± 8kV IEC for bus pins
- Ideal Passive – High impedance I/Os when unpowered
- TXD dominant state time out
- UVLO Protection
- Thermal Shutdown

Immunity and Certifications

- 10 kVpk Surge per VDE
- 5 kVrms Isolation rating per UL1577
- 7.07 kVpk VIOTM (transient) and 1414 Vpk VIORM (working voltage) per VDE0884-10

Power and Package

- Wide V_{CC2} Range: 4.5V-5.5V
- 16DW and 8DWV packages (> 8mm clearance and creepage)
- Temp: -40°C to 125°C

Benefits

- Integrated Reinforced Isolation
- Common Mode Choke may not be required (per OEM)
- Wide VCC Range (4.5V to 5.5V) for start/stop w/out boost
- Wide I/O voltage level adapting reduces external components
- Extended Bus-Fault Protection supporting 48V systems
- Hot swap support with glitch free bus I/O on power-up / down

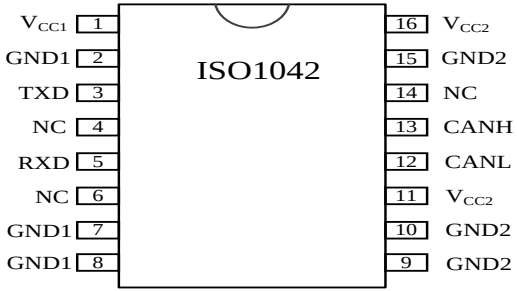

16DW

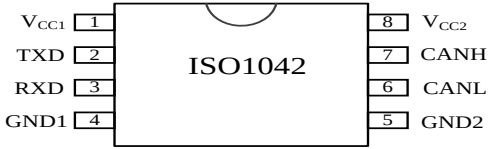

8DWV

Applications

- Body Electronics
- Power Train
- Infotainment / ADAS
- Building Automation
- Factory Automation

Q100 – Automotive Qualification Planned

ISO1042 EMC Conducted Emissions Vs. Competition

- Without choke

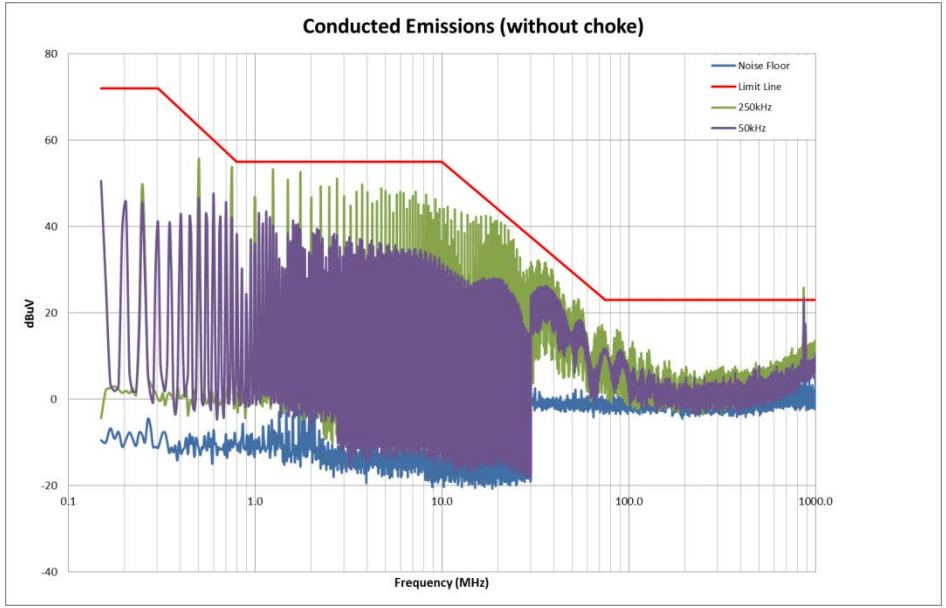

ISO1042

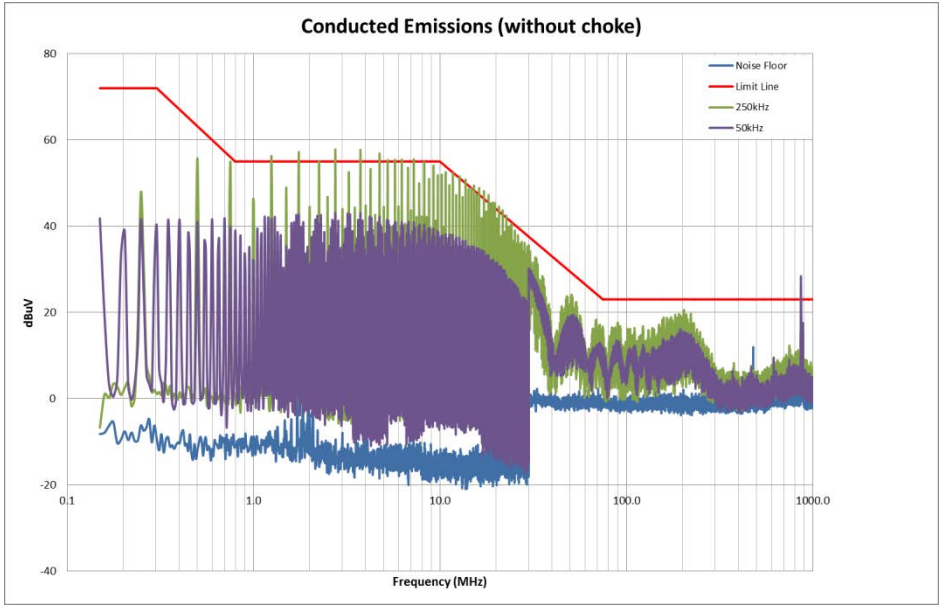

Competition ISO-CAN

TI Isolation Products for Automotive

Products	Description	Key Benefits
ISO1042 (RTM: 2018)	Isolated CAN Transceiver	Combines TI's best isolator with best CAN transceiver. Very good EMC Performance
SN6501-Q1/ SN6505-Q1	Automotive Qualified Isolated Power Supply	Flexible output voltages, high efficiency (80%+), low cost, small footprint, flexible output voltages, ultra low emissions
ISO77xx-Q1	Automotive Qualified 100 Mbps Reinforced Digital isolators	2.25V min power supply, > 8kV IEC ESD, EMC hardened, low prop delays, flexible package options (16DW, 8D, 16 DBQ), 6-channel options
ISO154x-Q1	Isolated I2C	Bidirectional I2C Isolator, Supports up to 1-MHz
ISOW78xx-Q1	Digital Isolators and Transceivers with Integrated Power Supply	Compact design, fully integrated power + signal isolation. Low emissions, High Efficiency, Soft start

Motor Drives

Key Specifications

- High Working Voltage – Motor Drives Mains > 690Vrms
- Noise (EFT) Immunity – for robust isolation barrier against IEC EFT
- Small Size – save board space and optomize layout. Especially important in (servo drives)
- CMTI – Needed for gate driving where a large voltage switching happens.
- Robust isolation barrier (functional safety)

Block Diagram

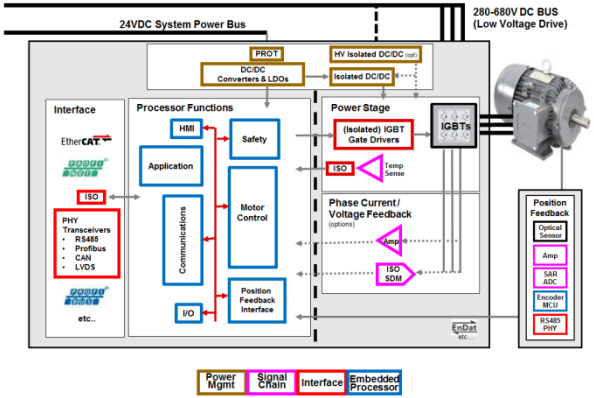

Key Parts

- ISO77xx
  - ISO7760 for gate drive in Servo Control, PWM drive
- ISO121x
  - Safety Inputs, Safety torque off
  - Fast switching ideal for motor positioning
- ISOWATT
  - Compact design, fully integrated power+signal isolation. Low emissions, High Efficiency, Soft start
- ISO14xx / ISO1500
  - RS485 Communication Port
- ISO1042
  - CAN Communication Port
- SN650x
  - IGBT Power Supply
  - Flexible output voltages, high efficiency (80%+), low cost, small footprint, flexible output voltages, ultra low emissions, SSC, Soft Start

Key Collateral

- Isolation in AC Motor Drives: Understanding the IEC 61800-5-1 Safety Standard
- 3-phase IPM Based Inverter with Single Package Reinforced Isolator Reference Design
- How to Improve Speed and Reliability of Isolated Digital Inputs in Motor Drives
- ISO7760DW Advantages in IPM based Motor Drives (coming soon)

Complete Motor Drive System

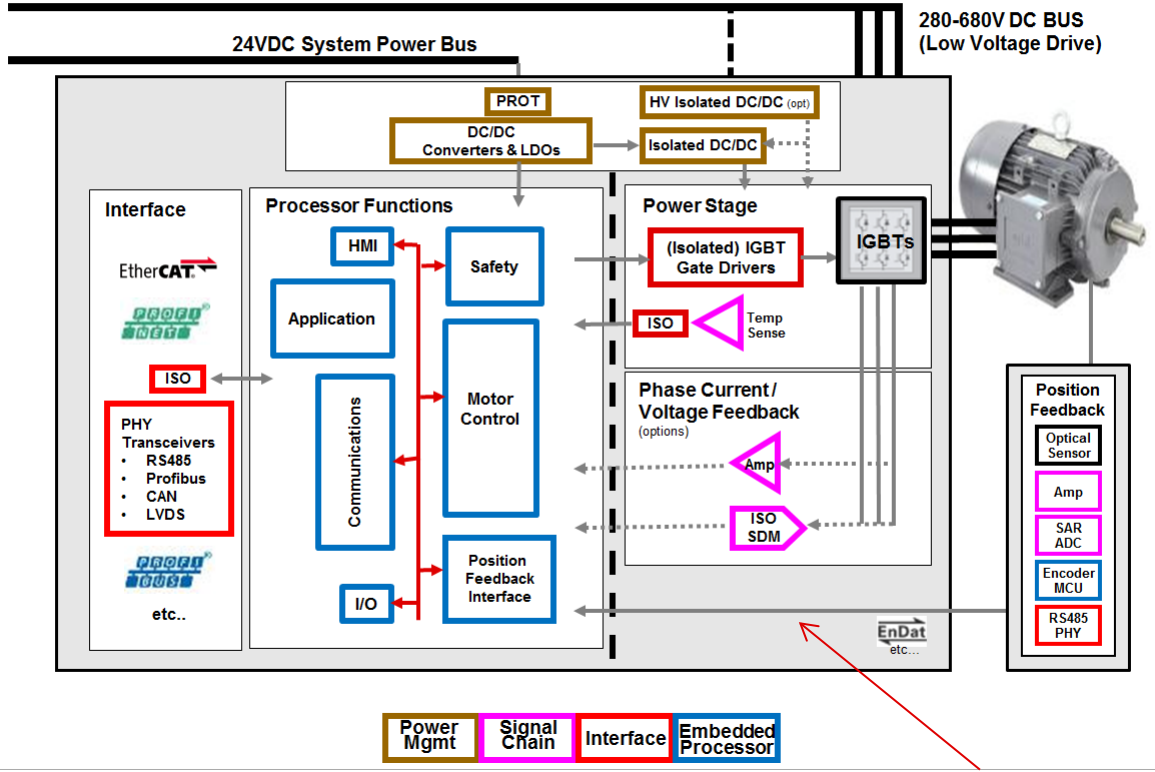

Different modules in this EE:

1. Power stage
2. Control module
3. Position feedback
4. Main power supply
5. HMI, I/O, Keyboard
6. Wired, Wireless communication

Signal Isolation is present in:

a. PWM driving (control stage to Power stage): RS485, CMOS
b. Voltage, current, Temp sensing
c. Communication interface(data log, Maintenance, PLC control)
e. CAN,RS485, Ethernet, Digital I/O

Power isolation present in:

a. IGBT gate drive power supply
b. AC/DC main power supply

Encoder interface is non isolated (most case

Reinforced Isolation with single Controller

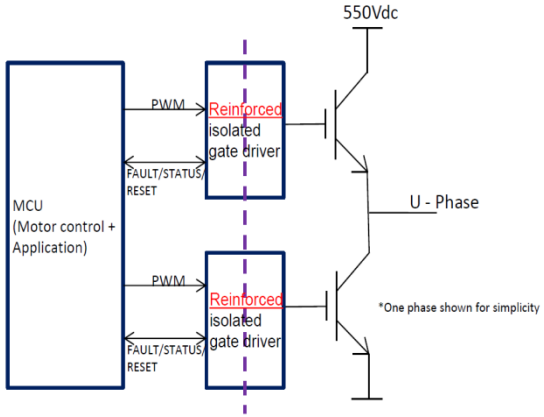

Most common architecture

Basic + Basic Isolation with dual controller architecture

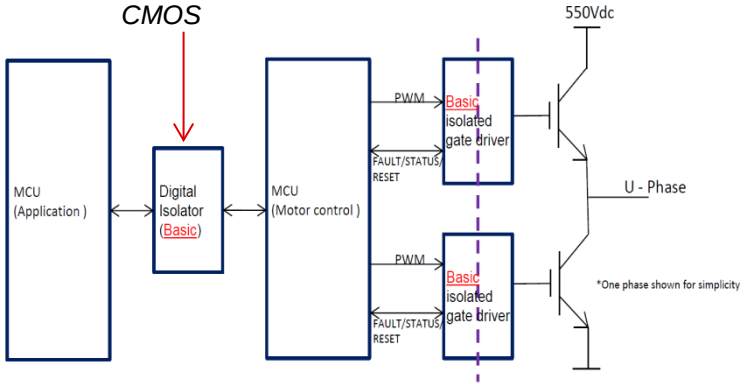

Used for >5-10kW drives

Reinforced Isolation with dual controller architecture

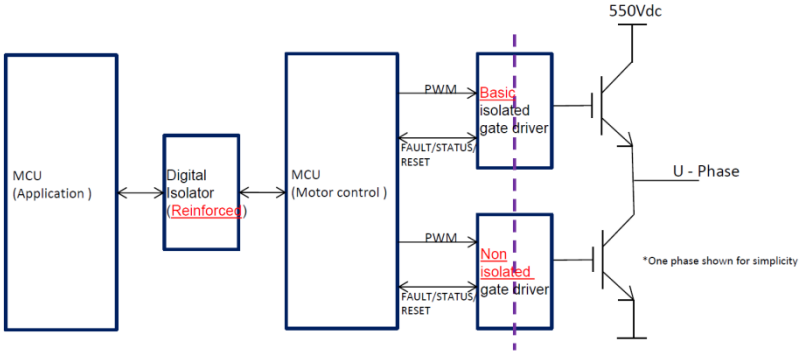

Texas Instruments

Motor Drives Key Specs

•**High working voltage**: TI' Isolation barrier is at least 25% better than nearest competition. This is required because input mains supply for Drives can go to 690Vrms or even higher.

- ✓ ISO77xx (**1kVrms** / 1500Vpk working voltage)
- ✓ ISO78xx (**1500Vrms** DW / **2000Vrms** DWW).
- ✓ Only isolator in industry with DWW package (>14mm creepage/clearance).
- ✓ ISO1042 has same isolation technology as ISO77xx, high working voltage on isolated transceivers

•**Noise immunity**: Due to fast switching/Ldi/dt, isolation barrier for gate drive/communications needs robust isolation barrier against IEC EFT.

•**Small size**: Multiple isolation channels in same package saves space against optos

- ✓ ISO77xx available in 1 to **6 channels** in various package options

•**CMTI**: highest in industry. Needed for gate driving at large voltage switching happens. Future SiC/GaN FETs may require even higher CMTI

- ✓ ISO78xx Minimum CMTI Spec: **+/-100 kV/µs** [Industry Leading]

High Channel Density

Digital Isolation Packages: ISO77xx Family

Images drawn to scale

Package	Identifier	Length (mm)	Width (mm)	Creepage (mm)	Channels
8-pin SOIC	D	4.90	3.91	4	1, 2
16-pin SSOP	DBQ	4.90	3.90	3.7	3, 4, 6
8-pin SOIC	DWV	5.85	7.50	8	2
16-pin SOIC	DW	10.30	7.50	8	1, 2, 3, 4, 6

Robust isolation barrier

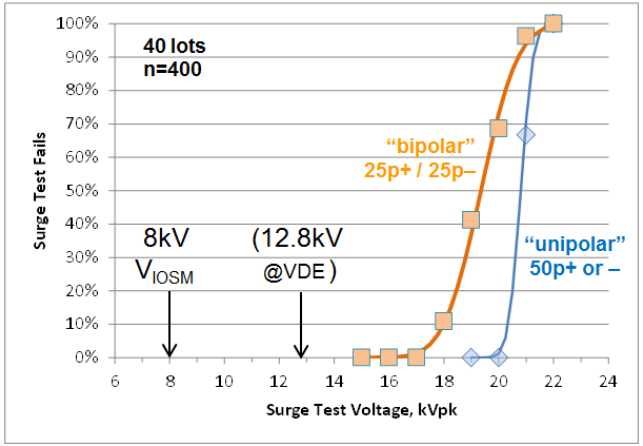

TI Isolation Products for Motor Drives

Products	Description	Key Benefits
ISO121x	24V isolated digital input receiver with 2mA current limit	Does not need field side supply, Fully integrated solution for digital input modules, Safety Inputs, Safety Torque Off, IEC61131-2 Type 1, 2, and 3
ISO77xx	100 Mbps Reinforced Digital isolators	2.25V min power supply, > 8kV IEC ESD, EMC hardened, low prop delays, flexible package options (16DW, 8D, 16 DBQ), 6-channel options
ISOW78xx	Digital Isolators and Transceivers with Integrated Power Supply	Compact design, fully integrated power + signal isolation. Low emissions, High Efficiency, Soft start
ISO14xx / ISO1500	Isolated RS-485 Transceiver	Higher Working Voltage, Reinforced, 8kV IEC-ESD, Improved Transceiver, Lower Cost, Wider Logic Supply, Higher CMIT, Increased Speed
ISO1042	Isolated CAN Transceiver	Improved HV ISO performance, CMTI, transceiver performance
SN6501 and SN6505	Push-pull transformer drivers for upto 5W isolated power supplies	Flexible output voltages, high efficiency (80%+), low cost, small footprint, flexible output voltages, ultra low emissions, SSC, Soft Start

Grid

Key Specifications

- High working voltage: lowers cost of cabling
- High CMTI: supports faster switching speeds, allowing a smaller filter size and keeping transition losses low
- Long lifetime: Devices are expected to work >20 years.
- Low Radiated Emissions: isolator cannot interfere with wireless modules
- Low Cost

Block Diagram

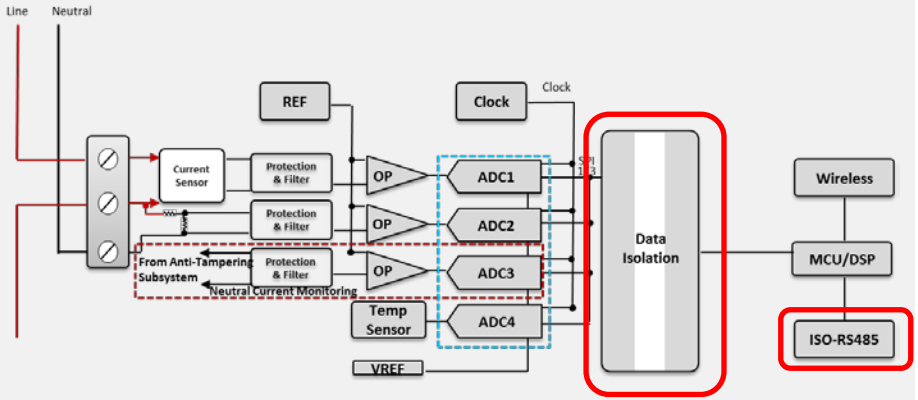

Key Parts

- ISO121x: 110VDC/AC and 240VDC/AC Detection
- ISO77xx: Low cost, 85kV/µs CMTI, long lifetime, beats CISPR22 radiated emissions
- ISO78xx: Industry leader in CMTI performance: 100kV/µs, 2000V working voltage, DWW package available
- ISOW784x: Integrated data and power isolation.
- ISO14xx / ISO1500: High Performance Isolated RS-485 Transceiver
- ISO1042: High Performance Isolated CAN Transceiver
- SN650x: Flexible output voltages, high efficiency (80%+), low cost, small footprint, flexible output voltages, ultra low emissions, SSC, Soft Start

Key Collateral

- Pushing the envelope with high-performance digital-isolation technology
- Polyphase Shunt Metrology with Isolated AFE Reference Design

Solar Inverter System Block Diagram

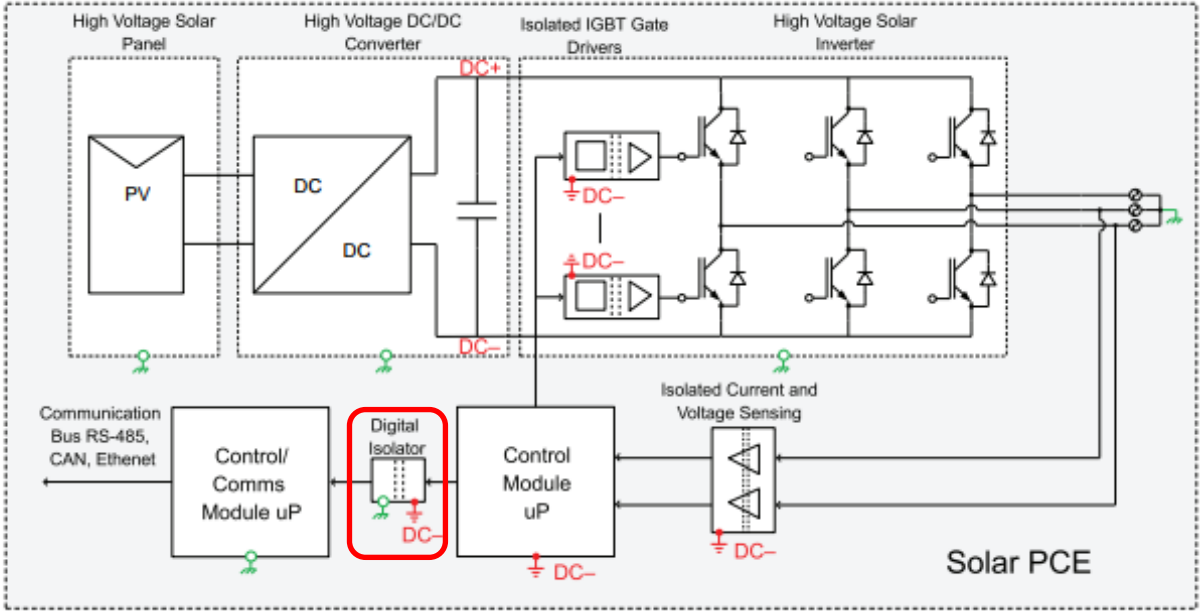

- Higher working voltages result in reduced wire cost and lower power losses which leads to lower cost per watt overall
- High CMTI supports faster switching speeds allowing for a smaller filter size and keeping transition losses low

E-Meter System Block Diagram

- Basic / Reinforced isolation required based on region
  - 4kV Russia, China
  - 2.5kV Korea, India, Middle East
- Isolation cannot interfere with LTE band

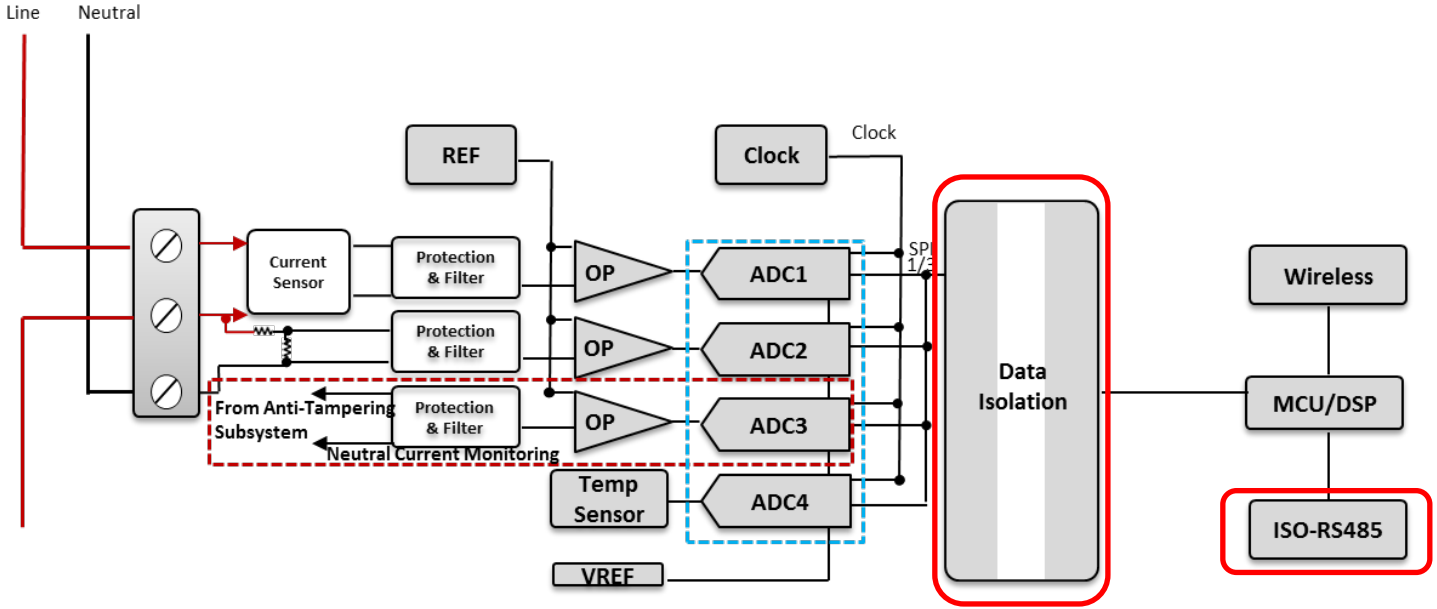

Grid – Key Requirements

Solar:

High working voltage: Higher voltages result in reduced wire cost and lower power losses which leads to lower cost per watt overall

✓DWW Package available for ISO78xx

✓Maximum isolation working voltage 2000VPK for DWW package for 34 years

High CMTI: supports faster switching speeds allow for a smaller filter size and keeps transition losses lower

✓ ISO78xx Minimum CMTI Spec: +/-100 kV/µs [Industry Leading]

Grid Protection:

Low Cost: Cost in e-meter and low end relays is critical as long as the minimum isolation requirement is met

E-meter isolation requirement dependent on country:

4kV (Russia, China), 2.5kV (Korea, India, Middle east)

Long Device Lifetime and Reliability: These devices will be in the field for 20+ years

✓ ISO77xx Lifetime: 40 years under 1000 Vrms Stress

Low Radiated Emissions: E-Meter may use wireless module. Isolation cannot interfere with LTE Band

✓ ISO77xx beats CISPR22 with margin

ISO7841 – Reinforced Isolation Capacitor Life Time Projection

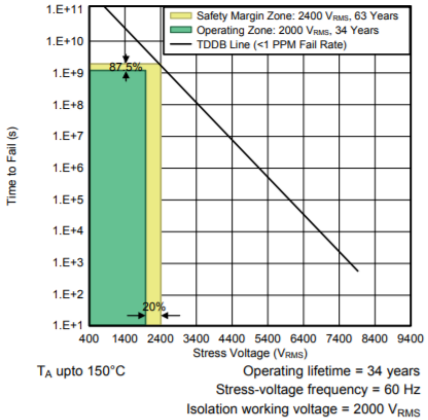

Figure 2. Reinforced Isolation Capacitor Life Time Projection for Devices in DWW Package

ISO7741 – Radiated Emissions per CISPR22

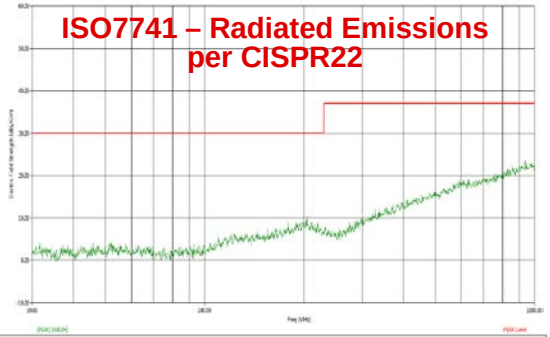

TI Isolation Products for Grid

Products	Description	Key Benefits
ISO121x	24V isolated digital input receiver with 2mA current limit	110VDC/AC and 240VDC/AC Detection, No field side power supply required
ISO78xx	High Performance 100 Mbps Reinforced Digital Isolator	Best in industry CMTI, Wide package options (DW, DWW), 2000 V Working Voltage
ISO77xx	100 Mbps Reinforced Digital Isolator	Low Radiated Emissions, Long lifetime, 2.25V min power supply, > 8kV IEC ESD, flexible package options (16DW, 8D, 16 DBQ), 6-channel options
ISOW78xx	Digital Isolators and Transceivers with Integrated Power Supply	Compact design, fully integrated power + signal isolation. Low emissions, High Efficiency, Soft start
ISO14xx / ISO1500	Isolated RS-485 Transceiver	Higher Working Voltage, Reinforced, 8kV IEC-ESD, Improved Transceiver, Lower Cost, Wider Logic Supply, Higher CMIT, Increased Speed
ISO1042	Isolated CAN Transceiver	Improved HV ISO performance, CMTI, transceiver performance
SN6501 and SN6505	Push-pull transformer drivers for up to 5W isolated power supplies	Flexible output voltages, high efficiency (80%+), low cost, small footprint, flexible output voltages, ultra low emissions, SSC, Soft Start

Power Delivery

Key Specifications

- Small package size as network power supplies are shrinking
- Multiple channels in one package
- Cost
- Isolation (basic / reinforced depending on where it is used)
- Power consumption (for efficiency specs on PSU)

Block Diagram

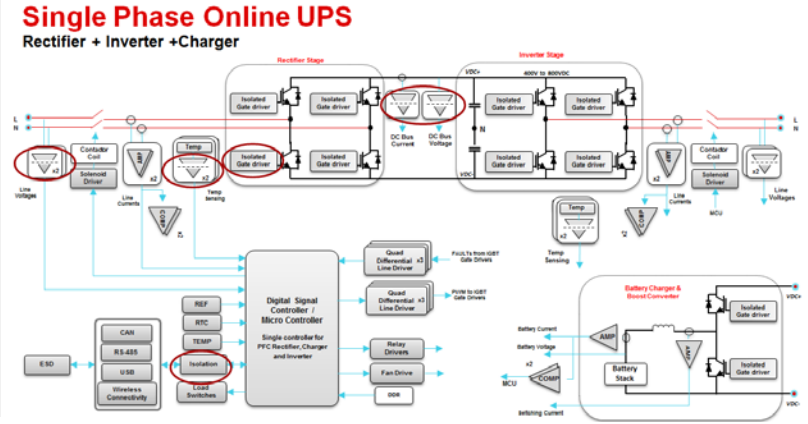

Key Parts

- ISO77xx: Meets basic / reinforced isolation. Package and channel options allow it to fit most sockets.
- SN650x: Size and efficiency make it suitable for IGBT Power Supply
- ISO14xx/ISO1500: Isolated RS485 for communication in module
- ISO1042: Isolated CAN Transceiver for communication in module
- ISOW784x (For RS485 / CAN Interface + isolated power)
- ISO154x (Telecom rectifier / Network PSU) – communication between MCU1 and MCU2

Key Collateral

- 92% Efficiency, CoC Tier2, 65W USB-PD AC/DC Adapter Reference Design in High Power Density – ISO7710
- High-Efficiency, 1.6-kW High-Density GaN-Based 1-MHz CrM Totem-Pole PFC Converter Reference Design

Single Phase Online UPS

Rectifier + Inverter +Charger

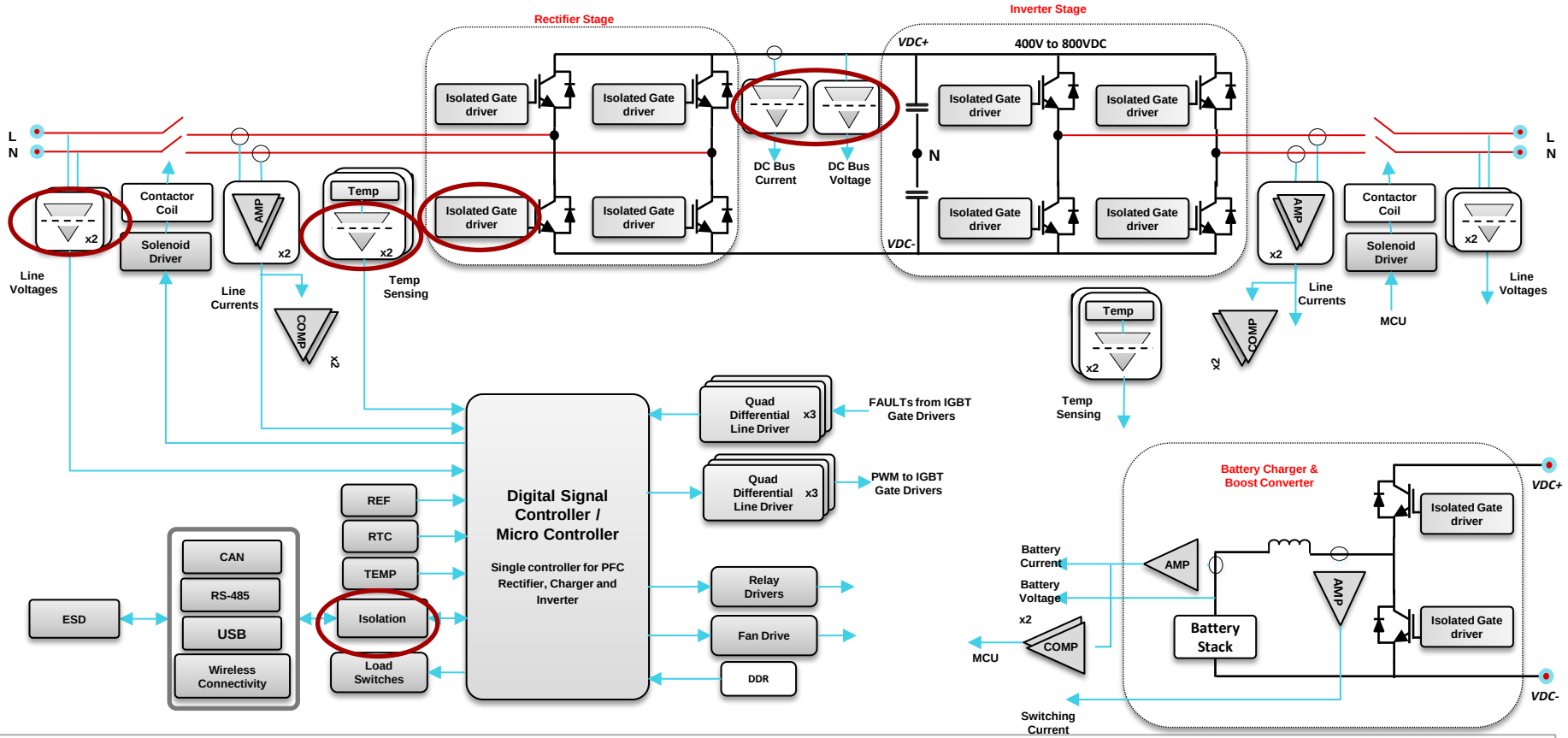

Except for RS485, other ports shown for completeness

Texas Instruments

Network and Server Power Supply

Distributed Control Architecture

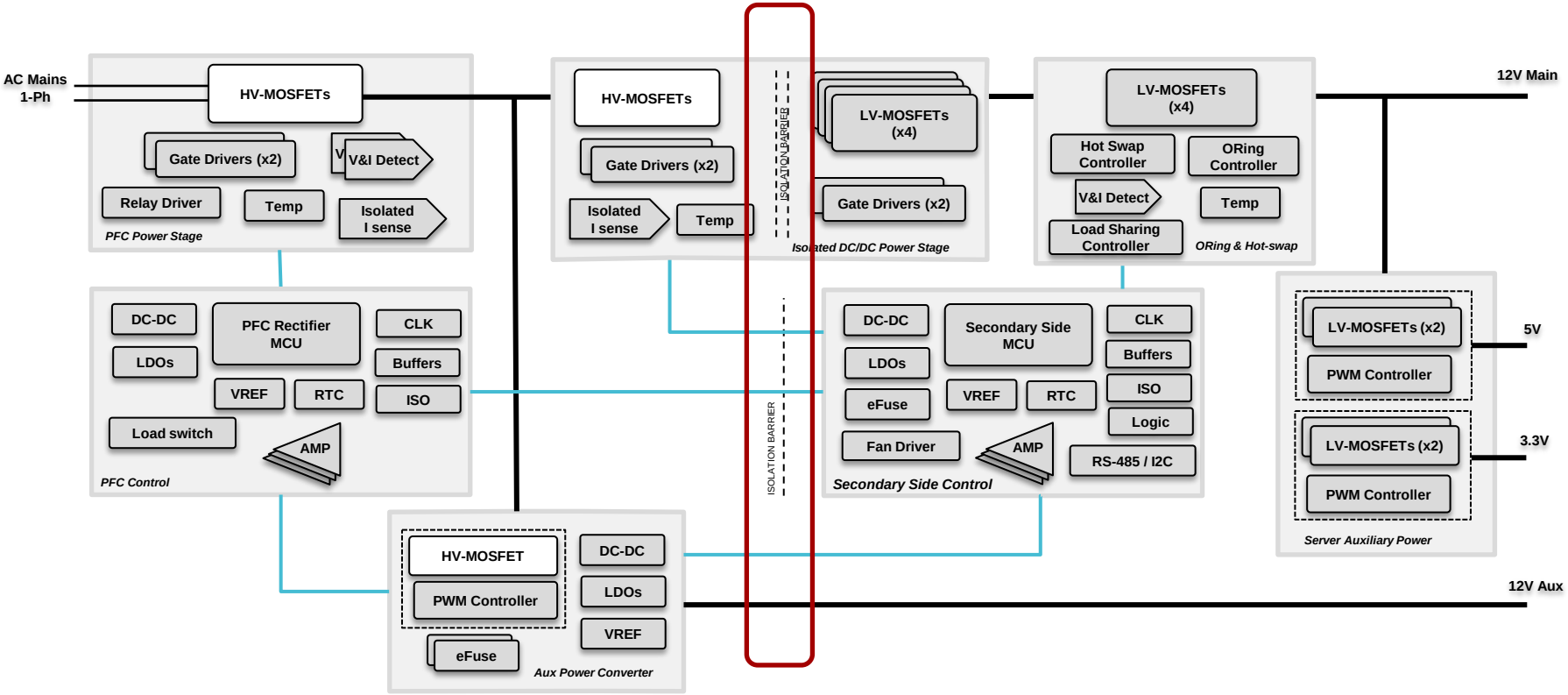

Texas Instruments

Power Delivery Requirements

- Small package size as network power supplies are shrinking
  - ISO77xx available in DW and DBQ packages
- Multiple channels in one package
  - ISO77xx available in up to 6 channel variants
- Isolation (basic / reinforced depending on where it is used)
- Power consumption (for efficiency specs on PSU)
  - SN650x up to 80% Efficient
- CAN mandatory for communication between parallel modules in UPS
  - ISO1042 offers isolation and CAN transceiver all in one device
- Cost

92% Efficiency, 65W USB-PD 2.0 AC/DC Adapter Reference Design in High Power Density/*TI Design: TIDA-01622*

IN Design Phase

Features

- Active-clamp Flyback + SR topology (UCC28780+UCC24612)
- Wide AC input range: 85 – 265 VAC, Output ripple voltage <=±100mV@20V
- **Fully compatible with USB PD 2.0 standard , with 5V/3A, 9V/3A, 15V/3A, 20V/3.25A output.**
- **92% Peak efficiency**
- Robust OCP/ SCP /OPP with Auto Recovery, OVP latch
- **No load power <=75mW (60mW), 20Vout@0.25W Pin<=0.5W**
- Meets Norms: IEC61000-2-3 Class D, EN–55022 class B (CE)

Target Applications

- Notebook PC power adapter
- Smartphone wall charger
- Other 60W AC/DC converter

Board Image

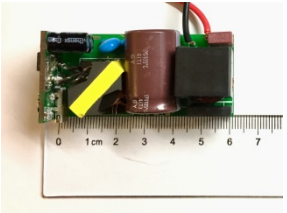

Next gen Consumer AC-DC example

30W/in^3

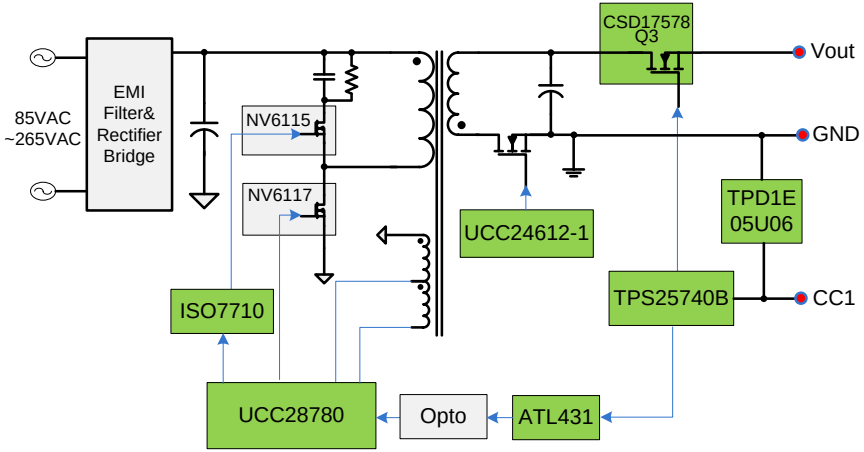

TI Isolation Products for Power Delivery

Products	Description	Key Benefits
ISO77xx	100 Mbps Reinforced Digital isolators	Flexible package options (16DW, 8D, 16 DBQ), 6-channel options, 2.25V min power supply, > 8kV IEC ESD, EMC hardened, low prop delays,
SN6501 and SN6505	Push-pull transformer drivers for upto 5W isolated power supplies	High efficiency (80%+), flexible output voltages, low cost, small footprint, flexible output voltages, ultra low emissions, SSC, Soft Start
ISO14xx/ISO1500	Isolated RS485 Transceiver	Higher Working Voltage, Reinforced, 8kV IEC-ESD, Improved Transceiver, Lower Cost, Wider Logic Supply, Higher CMIT, Increased Speed
ISO1042	Isolated CAN Transceiver	Improved HV ISO performance, CMTI, transceiver performance
ISOW78xx	Digital Isolators and Transceivers with Integrated Power Supply	Compact design, fully integrated power + signal isolation. Low emissions, High Efficiency, Soft start
ISO154x	Isolated I2C	Bidirectional I2C Isolator, Supports up to 1-MHz

Thank You!

©Copyright 2017 Texas Instruments Incorporated. All rights reserved.

This material is provided strictly “as-is,” for informational purposes only, and without any warranty.
Use of this material is subject to TI’s **Terms of Use**, viewable at TI.com