TECH DAYS
Texas Instruments

Driving the SAR – Selecting the Amplifier

TI Tech Day Cleveland 2018

Presented by: Keith Nicholas

Material by: Tim Green, Art Kay, Luis Chioye, Dale Li

Agenda

1. **ADC Input types**
   a) **Single ended, pseudo-differential, fully-differential, and true-differential**
   b) **Switched capacitor vs. buffered**
2. **Linear operation of amplifier and ADC**
   a) Rail-to-Rail amplifiers and crossover distortion
   b) Inverting configuration
3. **Common Front Ends**
   a) Instrumentation amplifier: Selecting gain and common mode range
   b) Fully Differential Amplifiers: Single Ended to Differential
4. **Error Sources:**
   a) Offset and Gain Error
   b) Calibration
   c) Drift and Non-linearity
   d) Noise
5. **AC Specifications**
6. **Aliasing**

Single Ended

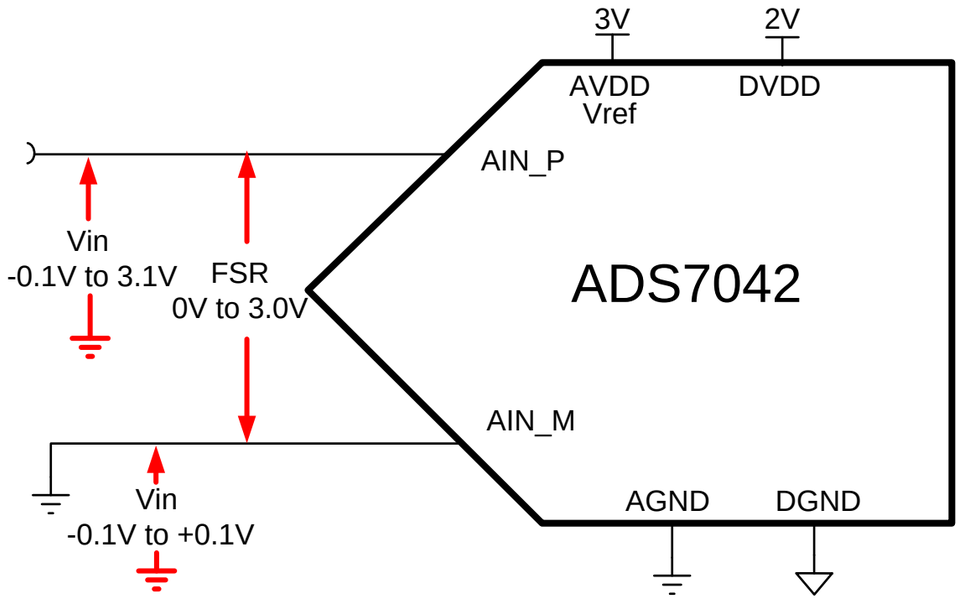

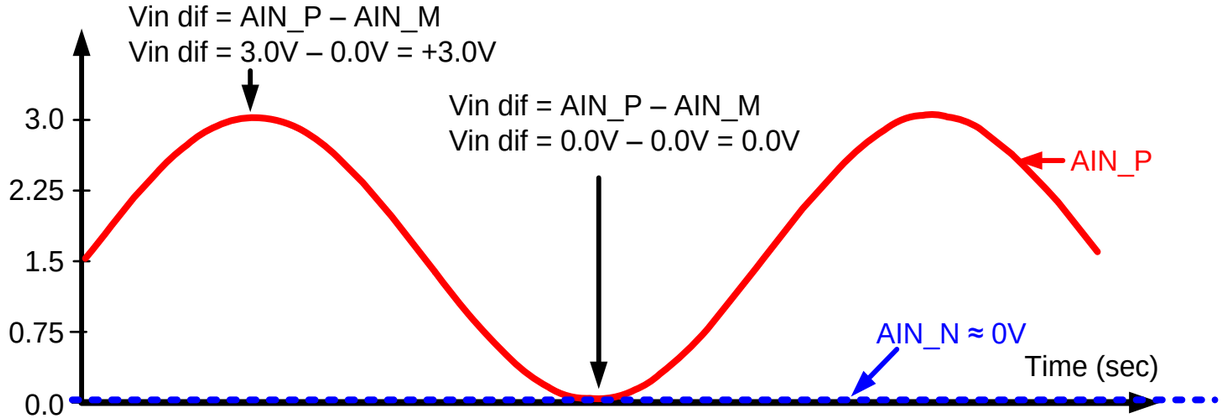

Pseudo-differential

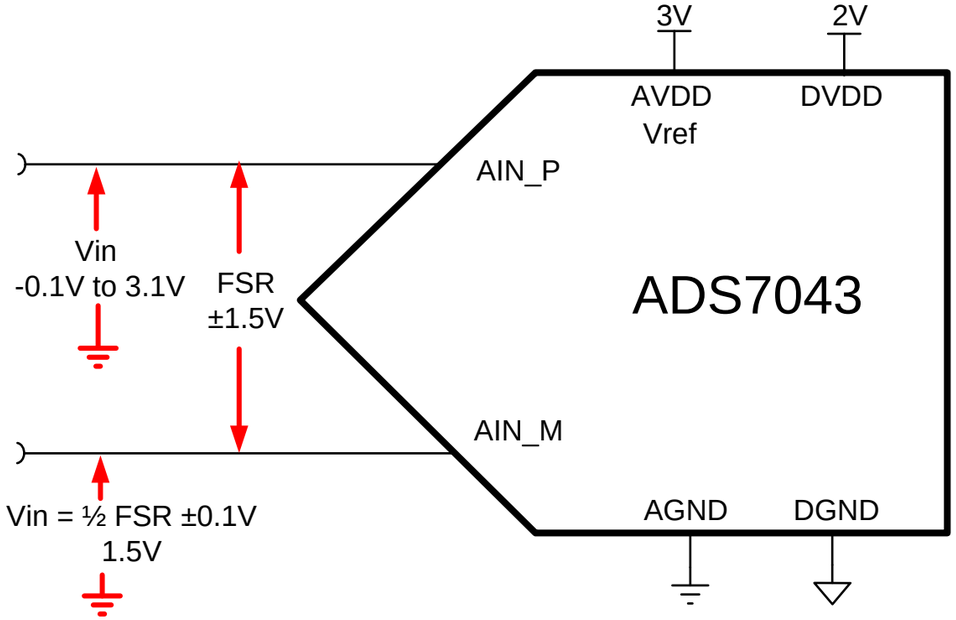

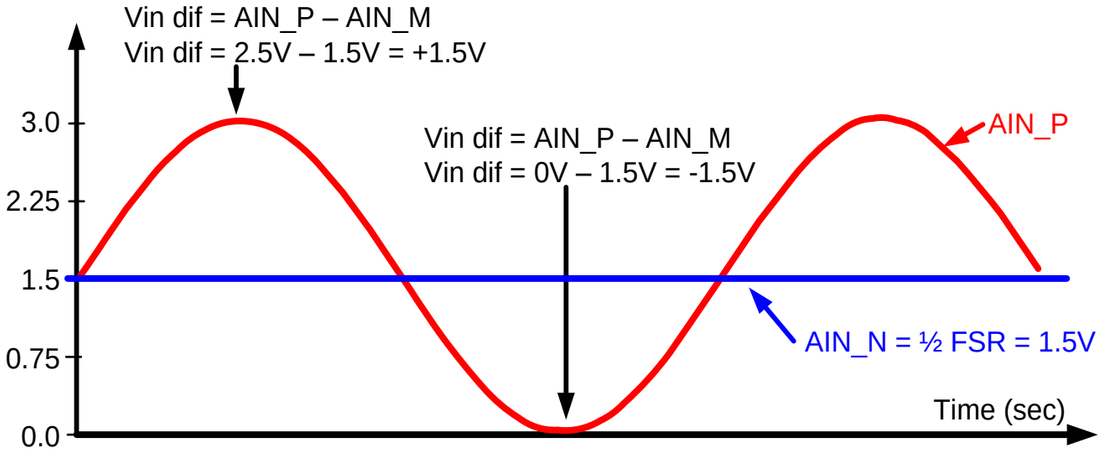

ADC Input Swing and Common Mode

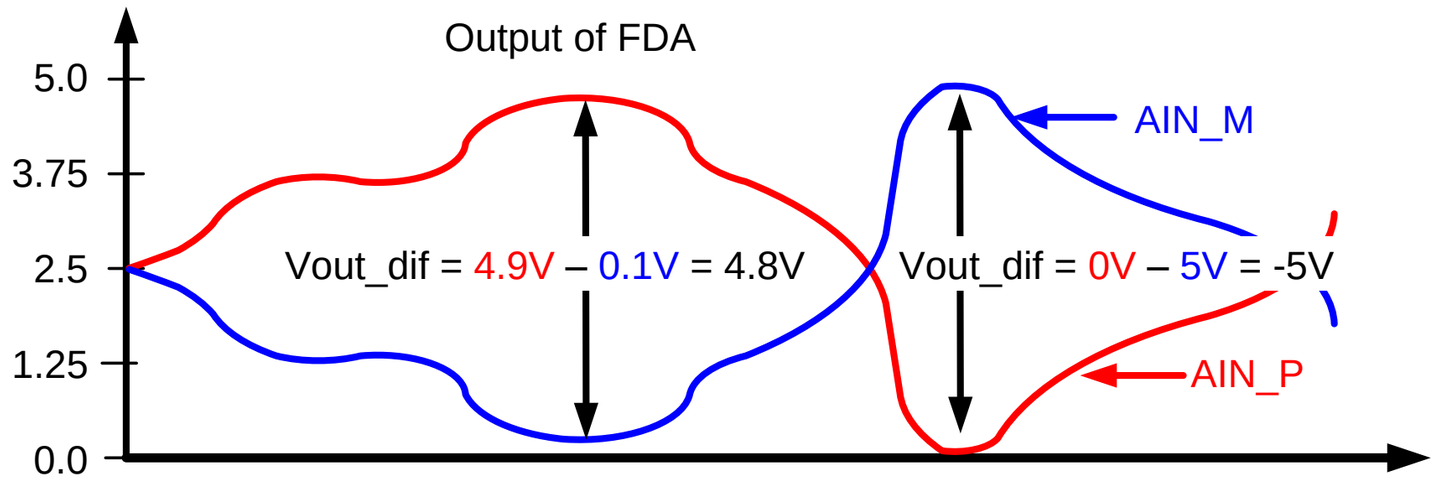

$$V_{dif} = AIN_P - AIN_M$$

- Differential of ±5V (10Vpp)
- Single ended equivalent 0V to 5V (5Vpp)
- Double the range of single ended
- Negative differential output can occur when absolute output voltage of each output is positive (unipolar single supply)

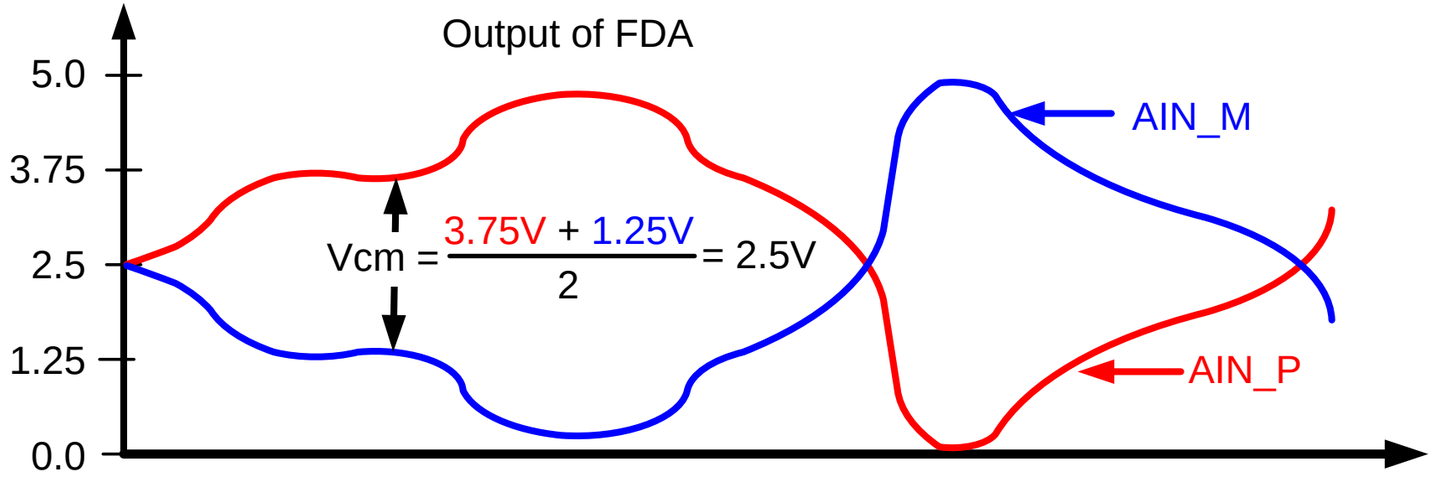

$$Vcm = \frac{AIN_P + AIN_M}{2}$$

- In this example common mode is always 2.5V

Fully Differential Input

PARAMETER 9110		MIN	TYP	MAX	UNIT
ANALOG INPUT					
Full-scale input voltage span		-Vref		Vref	
Absolute Input voltage range	AINP to GND	-0.1		Vref+0.1	V
	AINM to GND	-0.1		+0.1	
Common-mode voltage range (AIN_P + AIN_N)/2		**(Vref/2)-0.1**	**Vref/2**	**(Vref/2)+0.1**	

Vcm must be constant at Vref/2

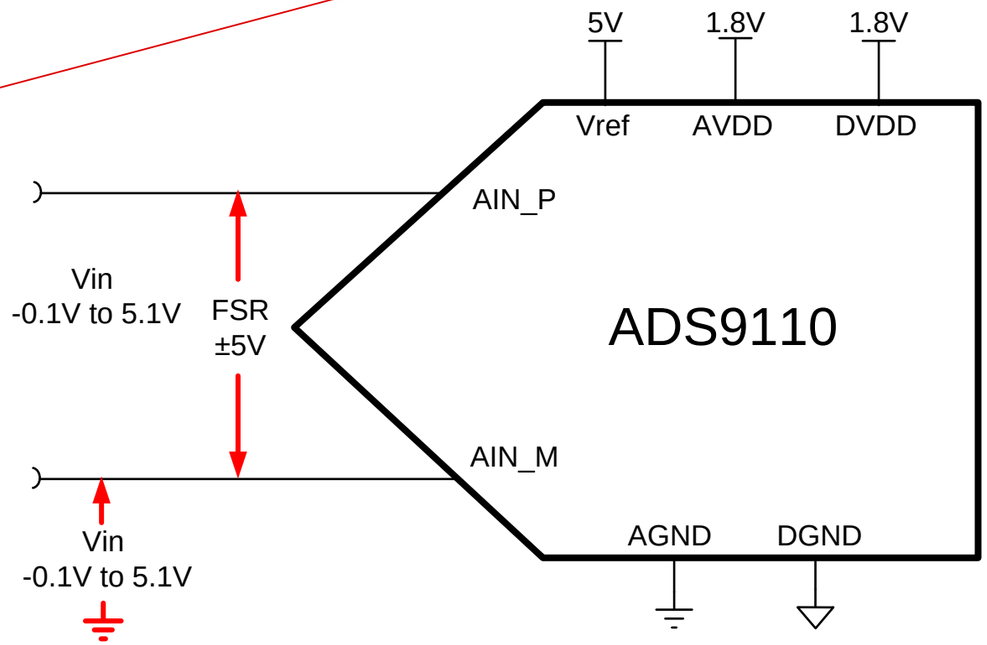

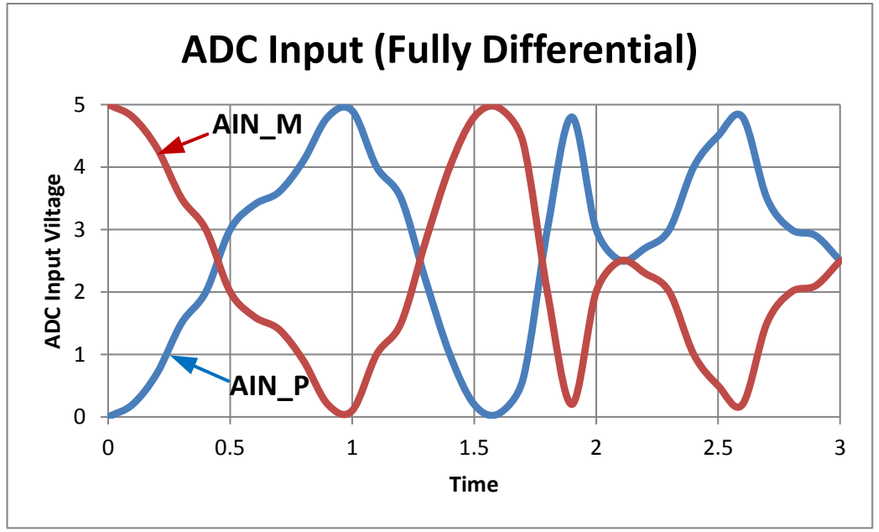

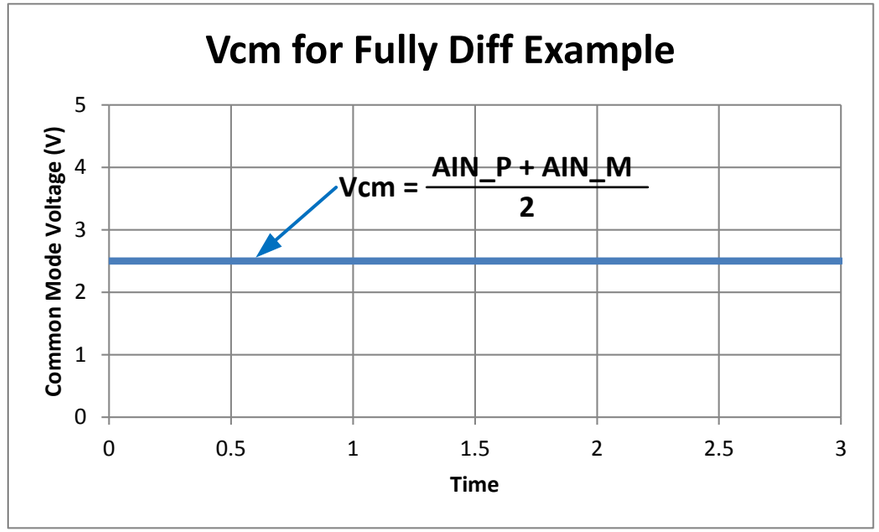

True Differential Input

PARAMETER ADS8881		MIN	TYP	MAX	UNIT
ANALOG INPUT					
Full-scale input voltage span		-Vref		Vref	
Absolute Input voltage range	AINP to GND	-0.1		Vref+0.1	V
	AINM to GND	-0.1		+0.1	
Common-mode voltage range (AIN_P + AIN_N)/2		**0.0**	**Vref/2**	**Vref**	

Vcm has a wide voltage range.

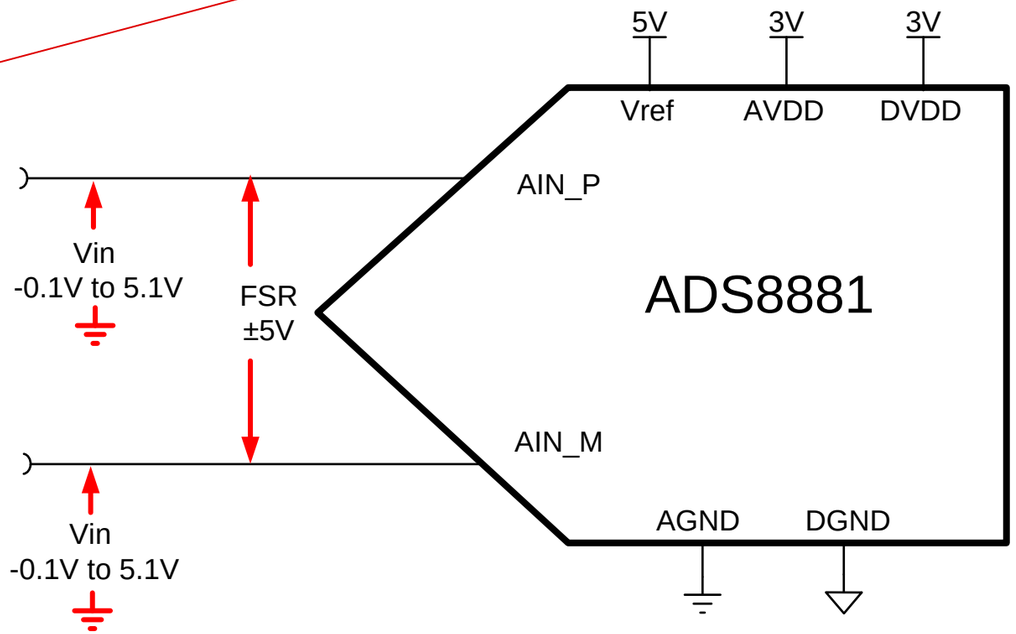

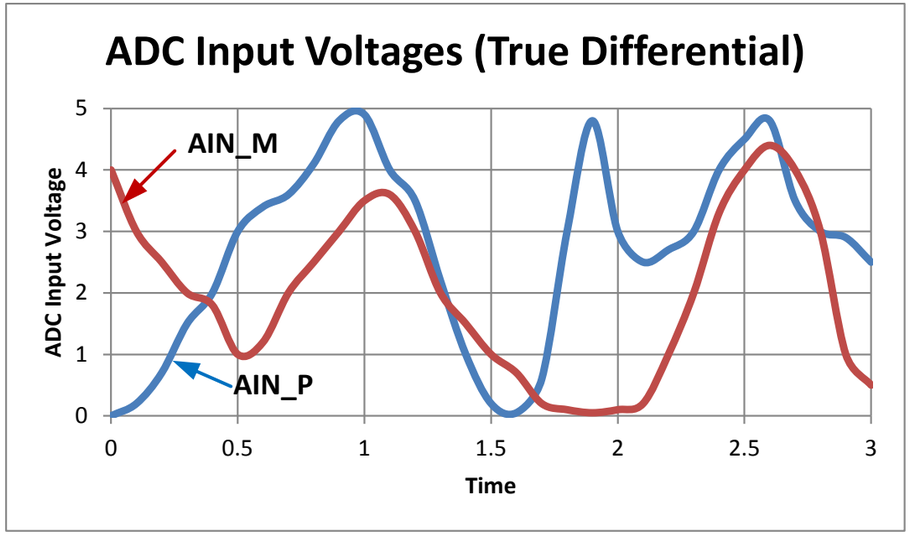

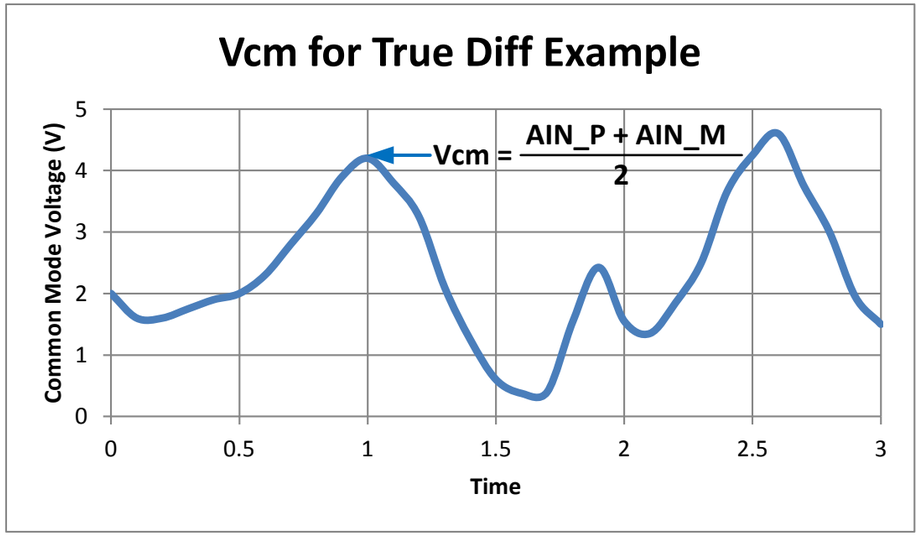

Summary *Examples* of ADC input types

Input Type	Vref	Ain_P	Ain_M	Vcm	FSR	Example 16 Bit Output
Single Ended	5V	0V to 5V	GND (+/- 100mV)	n/a	0V to 5V	0000 = 0V FFFF = FSR = 5V
Pseudo Differential	5V	0V to 5V	Set ½ * Range (2.5V)	n/a	-2.5V to +2.5V	8000 = -2.5V 7FFF = +2.5V
Fully Differential	5V	0V to 5V	0V to 5V	Set ½ * Range (2.5V)	-5V to +5V	8000 = -5V 7FFF = +5V
True Differential	5V	0V to 5V	0V to 5V	Can vary from –FS to +FS	-5V to +5V	8000 = -5V 7FFF = +5V

Input Impedance: Resistive vs. Switched Capacitor

Switched Capacitor Input

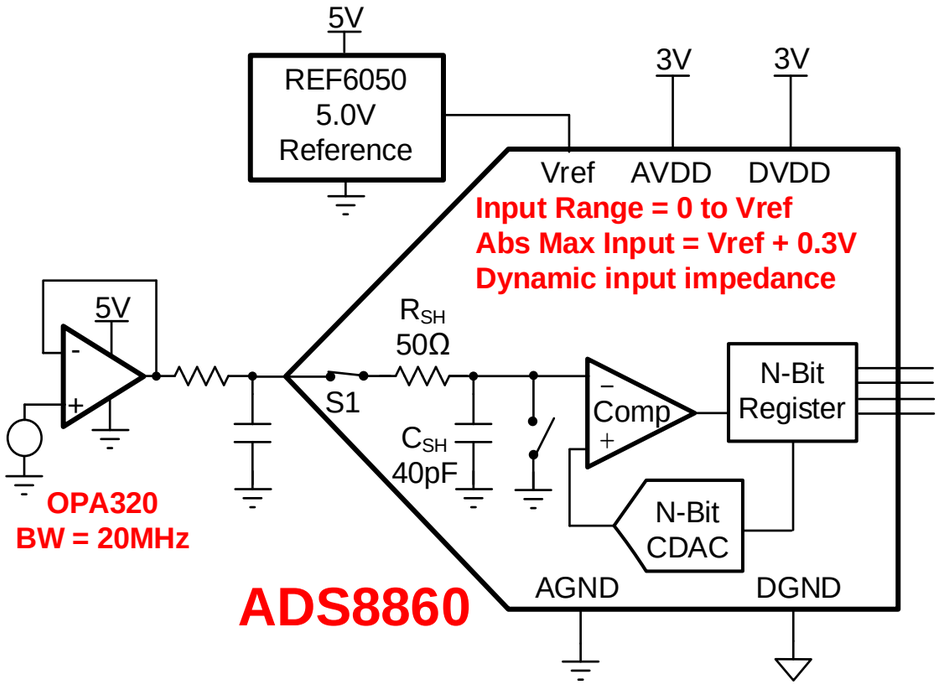

- Wide bandwidth external amp required
- Dynamic input impedance
- Input voltage range set by reference

Resistive, High Voltage, PGA input

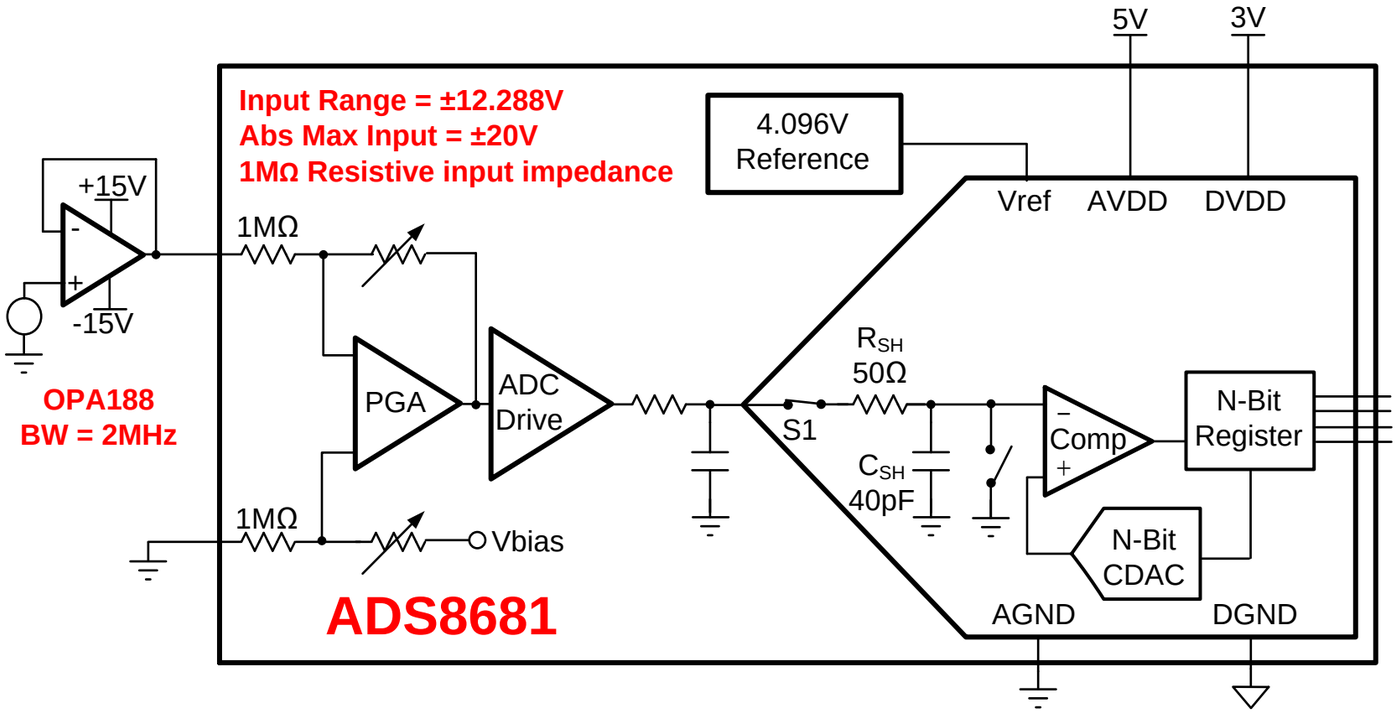

- External amplifier bandwidth not critical
- Internal PGA, ADC driver, and reference
- High voltage input (±12.288V) with 3V & 5V supplies

Agenda

1. **ADC Input types**
   a) Single ended, pseudo-differential, fully-differential, and true-differential
   b) Switched capacitor vs. buffered
2. **Linear operation of amplifier and ADC**
   a) **Rail-to-Rail amplifiers and crossover distortion**
   b) **Inverting configuration**
3. **Common Front Ends**
   a) Instrumentation amplifier: Selecting gain and common mode range
   b) Fully Differential Amplifiers: Single Ended to Differential
4. **Error Sources:**
   a) Offset and Gain Error
   b) Calibration
   c) Drift and Non-linearity
   d) Noise
5. **AC Specifications**
6. **Aliasing**

Single Ended Input: ADC Input Range Considerations

PARAMETER ADS7042		TEST CONDITION	MIN	TYP	MAX	UNIT
ANALOG INPUT						
Full-scale input voltage span			**0**		**AVDD**	
Absolute Input voltage range	AINP to GND		0		AVDD+0.1	V
	AINM to GND		-0.1		+0.1	

Absolute Maximum Ratings

ADS7042	MIN	MAX	UNIT
AVDD to GND	-0.3	3.9	V
DVDD to GND	-0.3	3.9	V
AINP to GND	**-0.3**	**AVDD + 0.3**	V
AINN to GND	-0.3	+0.3	V

AVDD+0.3 = 3.3V + 0.3V = 3.6V

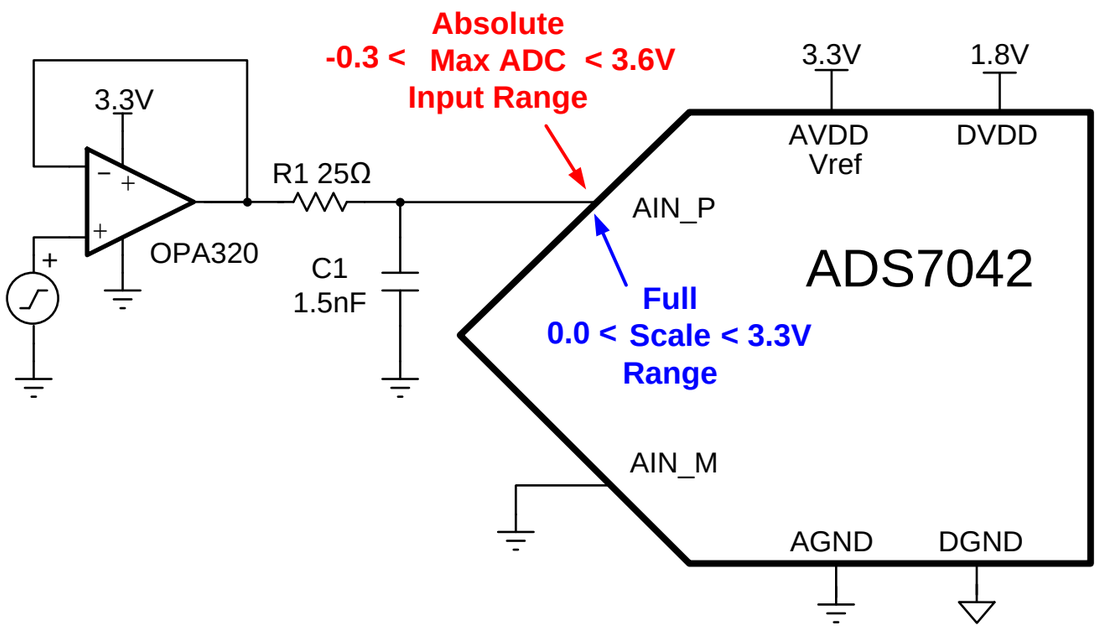

Single Ended Input: OPA320 Linear Range

PARAMETER OPA320		TEST CONDITION	MIN	TYP	MAX	UNIT
INPUT VOLTAGE						
Common-mode voltage range	V_{cm}		**(V-) - 0.1**		**(V+)+0.1**	V
OUTPUT						
Voltage swing from both rails	V_O	RL = 10kΩ		10	**20**	mV
		RL = 2kΩ		25	35	
OPEN-LOOP GAIN						
Open-loop gain	A_{OL}	**0.1 < Vo < (V+)-0.1V, R_L = 10kΩ**	114	132		dB
		0.2 < Vo < (V+)-0.2V, R_L = 2kΩ	108	123		

Amplifier input range	$-0.1V < V_{cm} < 3.4V$
Amplifier output range	$0.02 < V_O < 3.28V$
Amplifier Linear Range	$0.1 < V_O < 3.2V$
Worst Case Range	**$0.1 < V_O < 3.2V$**

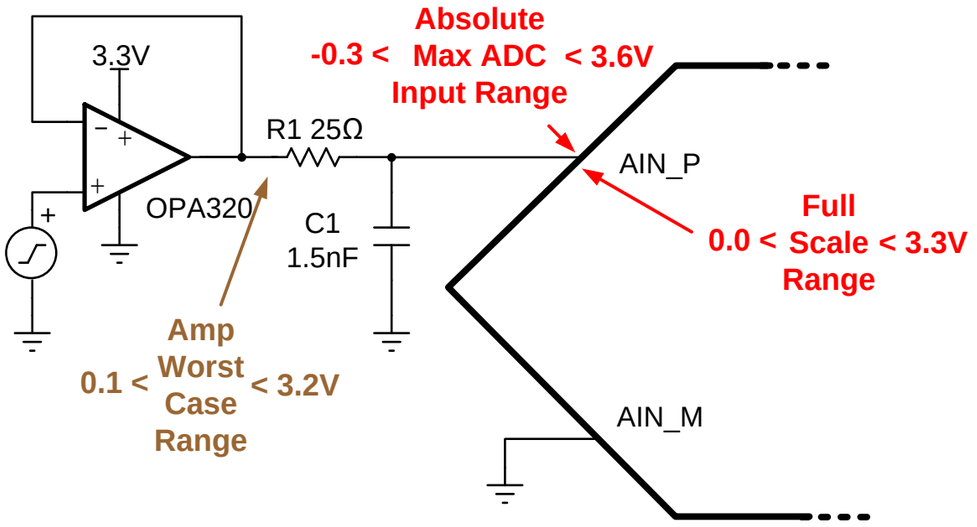

Single Ended Input: Extending the Op Amp Range

Low Noise Negative Bias Generator

- Regulated Output Voltage −0.232 V
- Output Voltage Tolerance 5%
- Output Voltage Ripple 4 mV_{PP}
- Maximum Output Current 26 mA

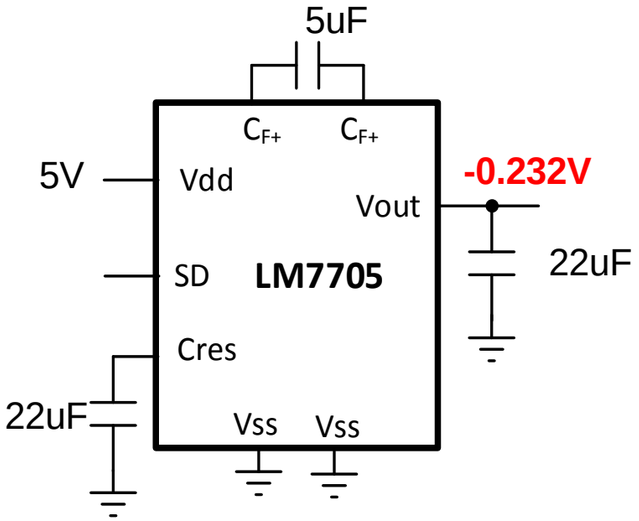

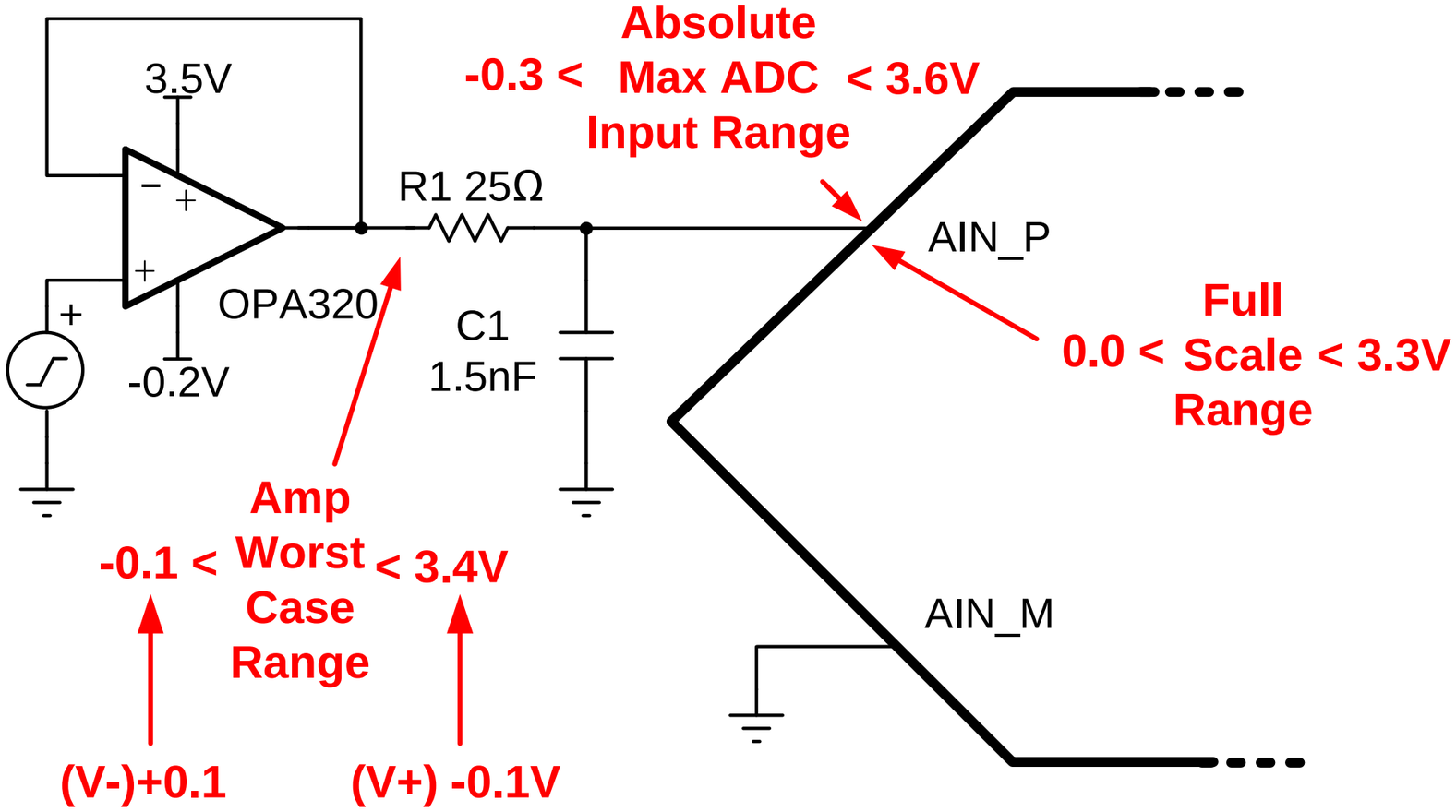

Single Ended Input: OPA625

PARAMETER OPA320		TEST CONDITION	MIN	TYP	MAX	UNIT
INPUT VOLTAGE						
Common-mode voltage range	V_{cm}		(V-)		(V+) - 1.15	V
OUTPUT						
Voltage swing from both rails	V_O	RL = 10kΩ		20	**35**	mV
		RL = 600Ω		60	80	
OPEN-LOOP GAIN						
Open-loop gain	A_{OL}	**0.15 < Vo < (V+) - 0.15V, R_L = 10kΩ**	110	132		dB
		0.2 < Vo < (V+) - 0.2V, R_L = 600Ω	106	128		

Amplifier input range	$0.0V < V_{cm} < 2.15V$
Amplifier output range	$0.035 < V_O < 3.265V$
Amplifier Linear Range	$0.15 < V_O < 3.15V$
Worst Case Range	$0.15 < V_O < 2.15V$

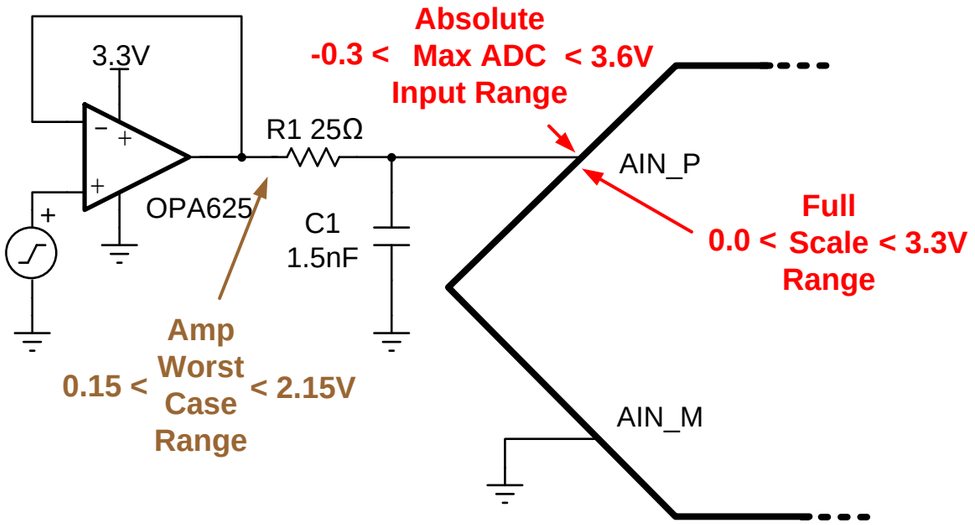

Inverting amplifier: Eliminate Common mode issue

PARAMETER OPA625		TEST CONDITION	MIN	TYP	MAX	UNIT
INPUT VOLTAGE						
Common-mode voltage range	V_{cm}		(V-)		(V+) - 1.15	V
OUTPUT						
Voltage swing from both rails	V_O	RL = 10kΩ		20	**35**	mV
		RL = 600Ω		60	80	
OPEN-LOOP GAIN						
Open-loop gain	A_{OL}	0.15 < Vo < (V+) - 0.15V, R_L = 10kΩ	110	132		dB
		0.2 < Vo < (V+) - 0.2V, R_L = 600Ω	106	128		

Amplifier input range	No Vcm limit
Amplifier output range	$0.035 < V_O < 3.265V$
Amplifier Linear Range	$0.15 < V_O < 3.15V$
Worst Case Range	**$0.15 < V_O < 3.15V$**

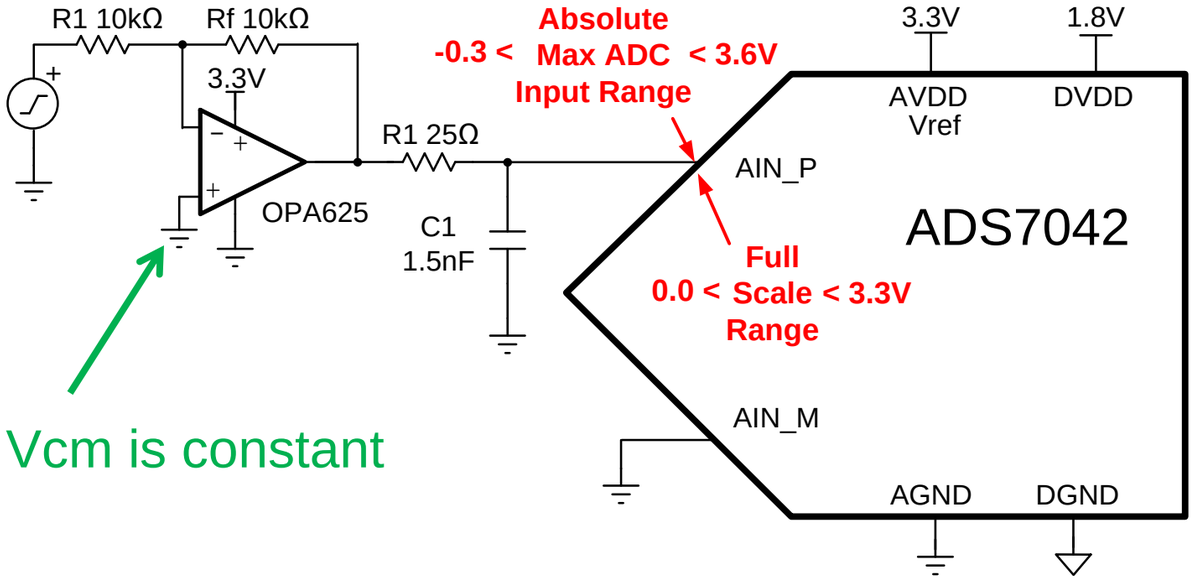

Input Crossover Distortion in Rail-to-Rail Inputs

PARAMETER OPA316		TEST CONDITIONS	MIN	TYP	MAX	UNIT
INPUT VOLTAGE RANGE						
V_{CM}	Common mode voltage range	TA = -40C to 85C	-0.2		(V+)+0.1	V
CMRR	Common mode Rejection	Vs = 5V, -0.1V<Vcm< 3.6V	76	90		dB
		Vs = 5V, -0.1V<Vcm<5.2V	65	80		dB

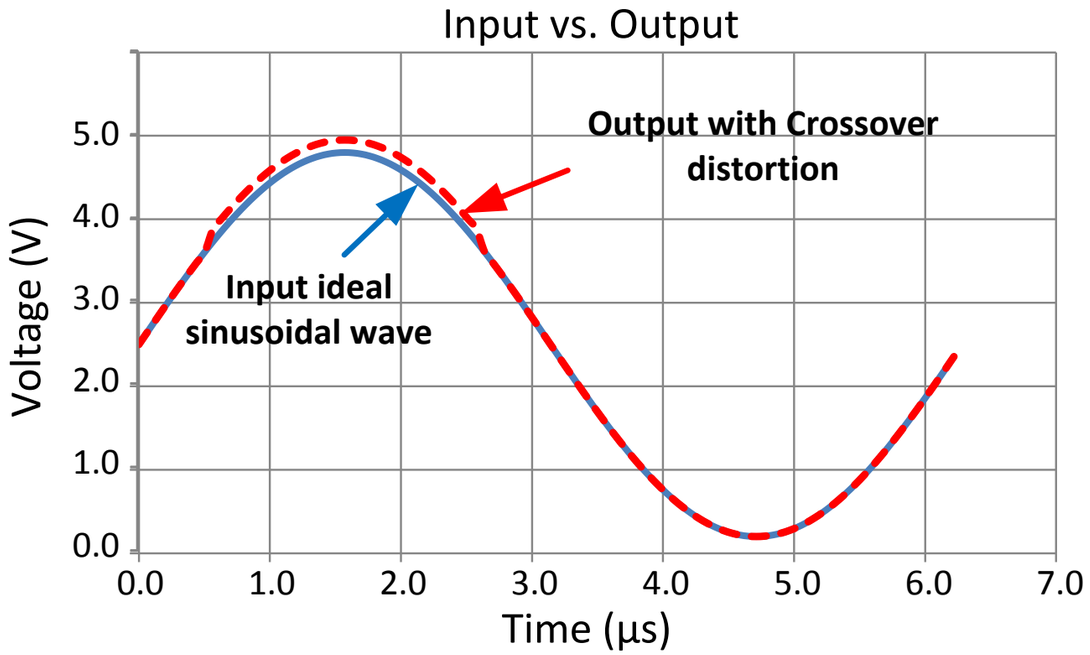

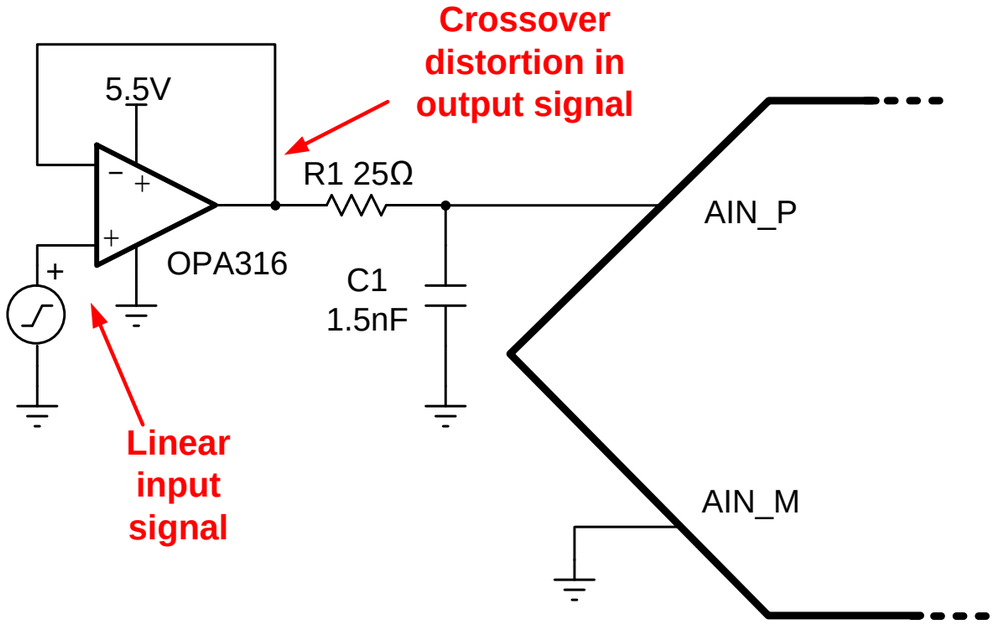

Input Cross-Over distortion vs Zero Cross-Over

PARAMETER: OPA350 – Has Crossover		MIN	TYP	MAX	UNIT
INPUT VOLTAGE RANGE					
V_{CM}	Common mode voltage range	(V-)-0.1		(V+)+0.1	V
CMRR	Common mode Rejection -0.1V<Vcm<5.6V	74	90		dB

PARAMETER: OPA320 – Zero Cross-Over		MIN	TYP	MAX	UNIT
INPUT VOLTAGE RANGE					
V_{CM}	Common mode voltage range	(V-)-0.1		(V+)+0.1	V
CMRR	Common mode Rejection -0.1V<Vcm<5.6V	100	114		dB

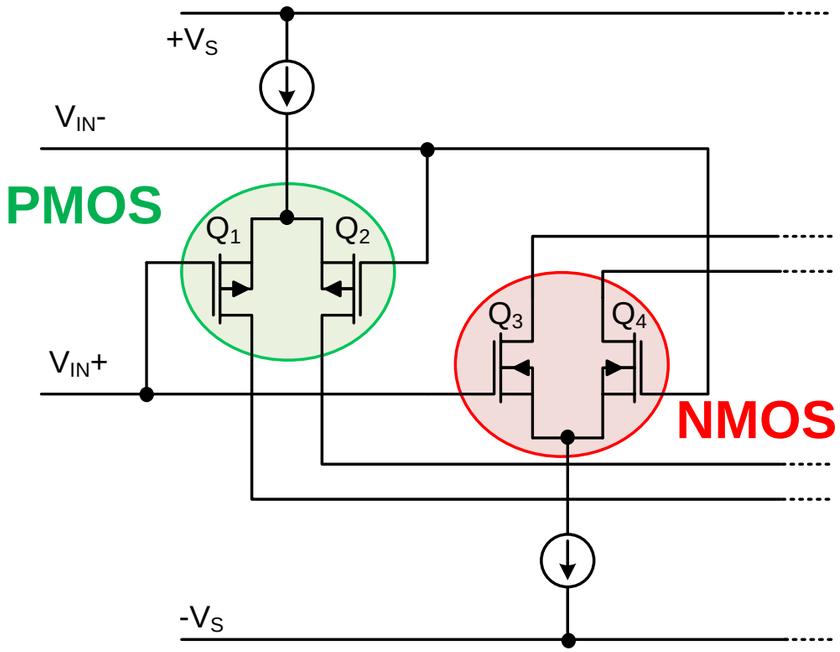

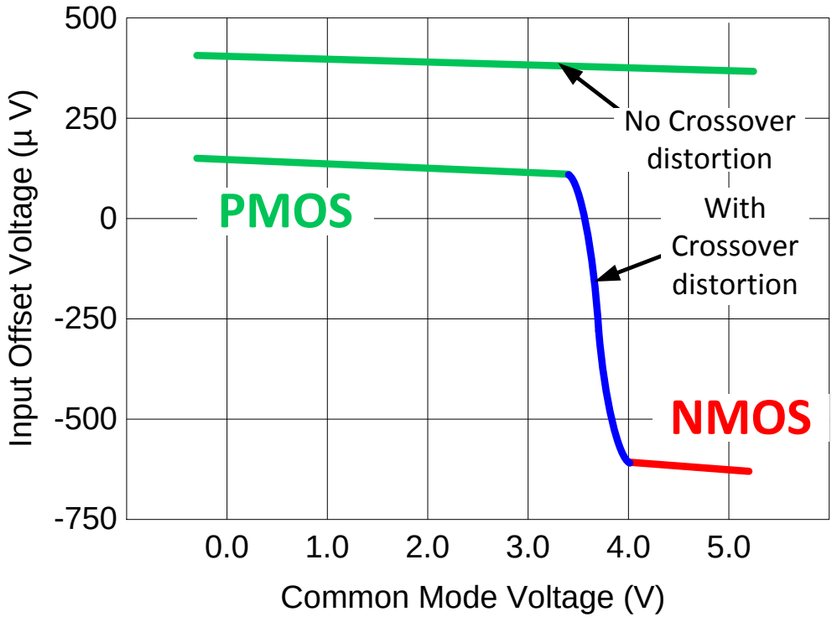

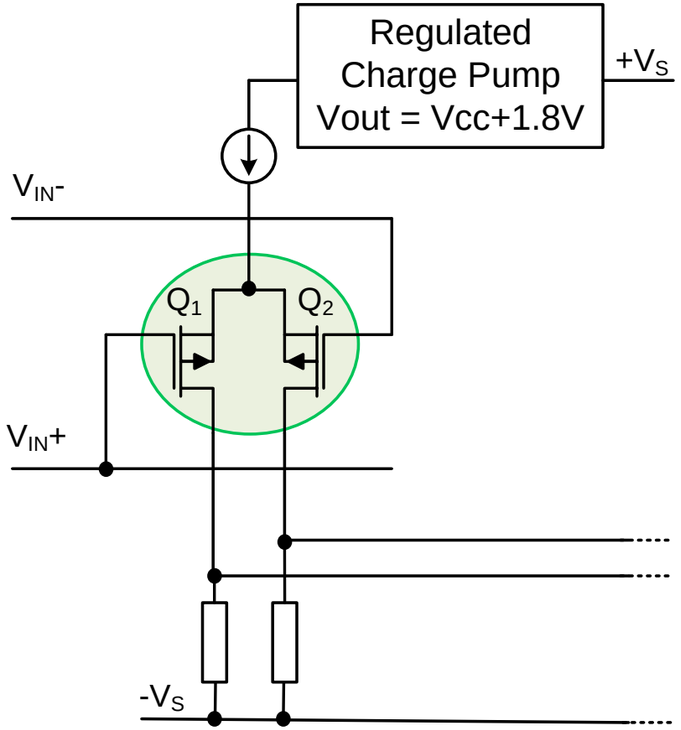

Optimize bypass for internal charge pump op amps

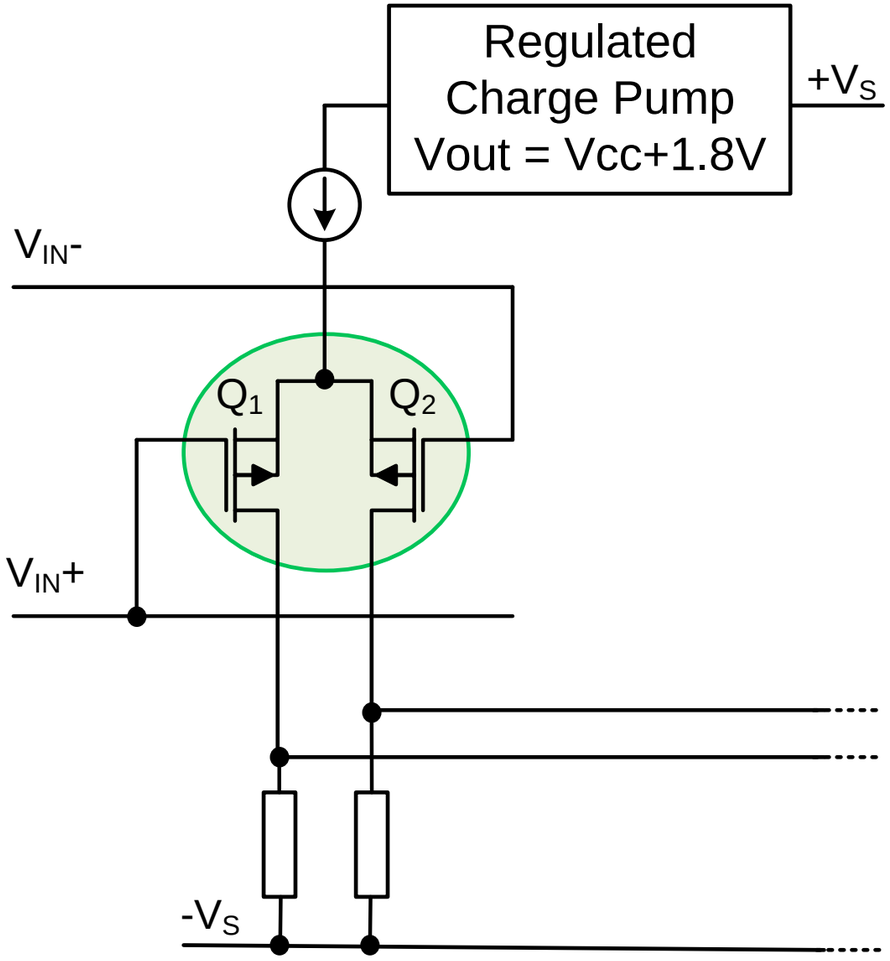

Short direct connections from supply to decoupling

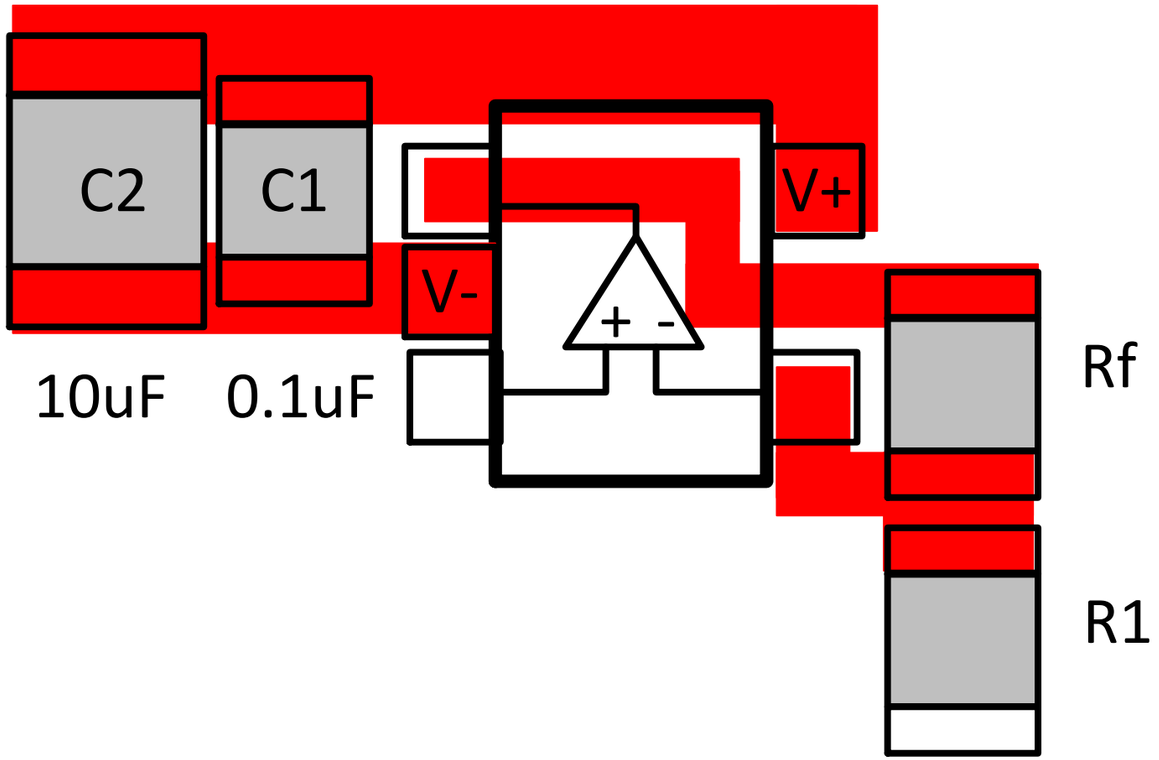

THD vs. Crossover Distortion

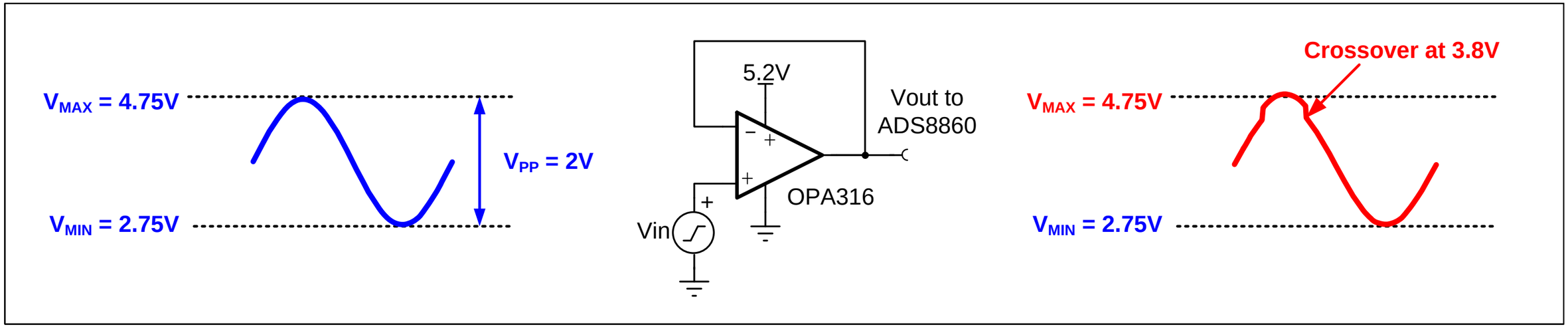

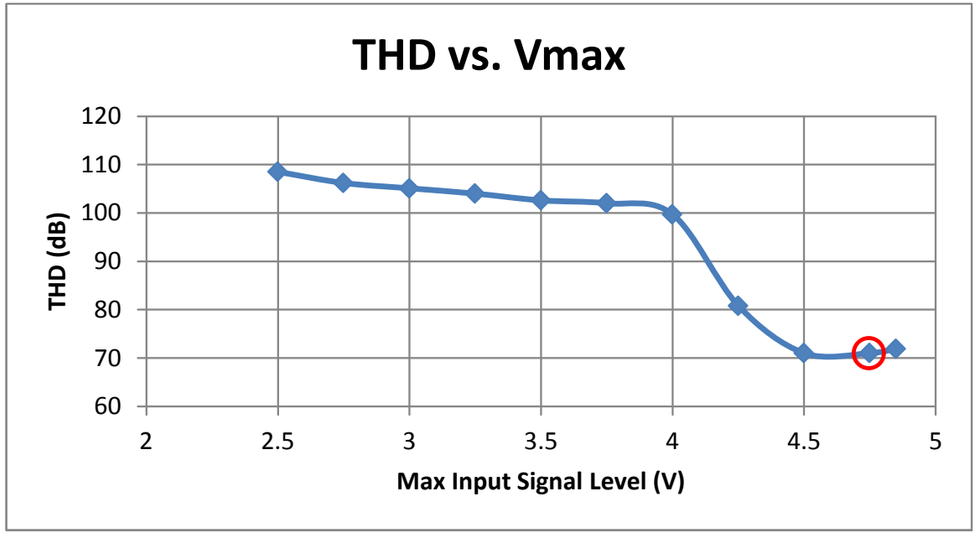

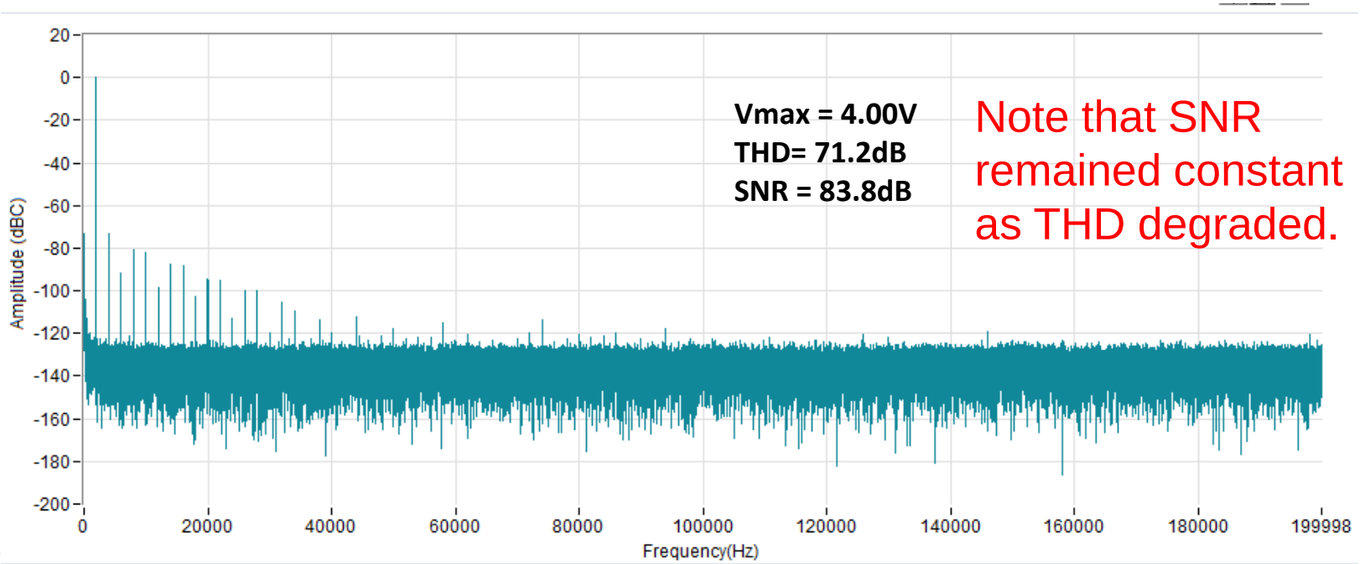

Agenda

1. **ADC Input types**
   a) Single ended, pseudo-differential, fully-differential, and true-differential
   b) Switched capacitor vs. buffered
2. **Linear operation of amplifier and ADC**
   a) Rail-to-Rail amplifiers and crossover distortion
   b) Inverting configuration
3. **Common Front Ends**
   a) **Instrumentation amplifier: Selecting gain and common mode range**
   b) **Fully Differential Amplifiers: Single Ended to Differential**
4. **Error Sources:**
   a) Offset and Gain Error
   b) Calibration
   c) Drift and Non-linearity
   d) Noise
5. **AC Specifications**
6. **Aliasing**

Instrumentation Amplifier (INA): Choose Gain

PARAMETER ADS8681		TEST CONDITION	MIN	TYP	MAX	UNIT
ANALOG INPUT						
V_{IN}	Full-scale input voltage span	Input range = ±3 x V_{REF}	-12.288		12.288	V
		Input range = ±2.5 x V_{REF}	-10.24		10.24	
		Input range = ±1.5 x V_{REF}	-6.144		6.144	

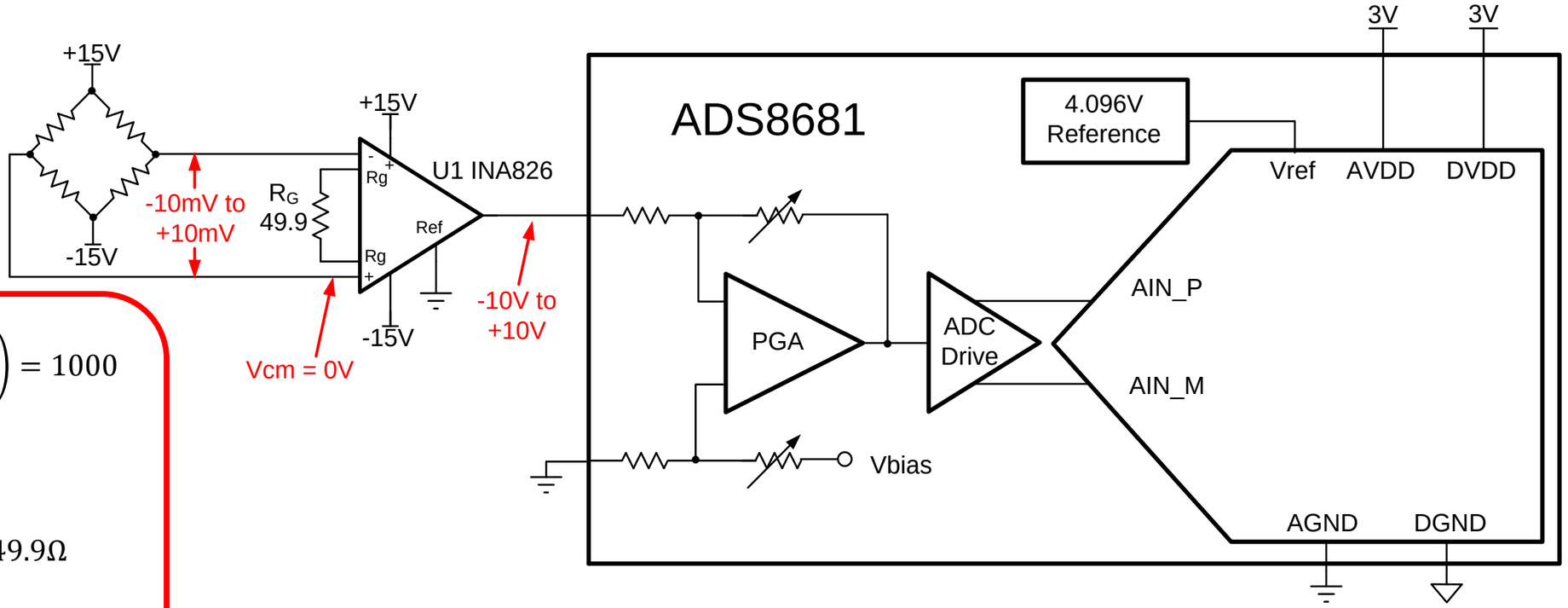

$$G_{826} = \left(\frac{\Delta V_{OUT}}{\Delta V_{IN}}\right) = \left(\frac{10V - (-10V)}{10mV - (-10mV)}\right) = 1000$$

$$G_{826} = 1 + \left(\frac{49.4k\Omega}{R_G}\right)$$

$$R_G = \frac{49.4k\Omega}{G_{826} - 1} = \frac{49.4k\Omega}{1000 - 1} = 49.5\Omega \; or \; 49.9\Omega$$

$$V_{OUT} = G_{826} \cdot V_{IN} + V_{REF}$$

$$V_{OUT} = 1000 \cdot (10mV) + 0V = 10V$$

Common mode and output swing for INAs

$$V_{A1} = V_{CM} - \frac{V_{DIF}}{2} \cdot \left(1 + 2 \cdot \frac{R_F}{R_G}\right)$$

$$V_{OUT} = V_{DIF} + V_{DIF} \cdot \left(1 + 2 \cdot \frac{R_F}{R_G}\right) + V_{REF}$$

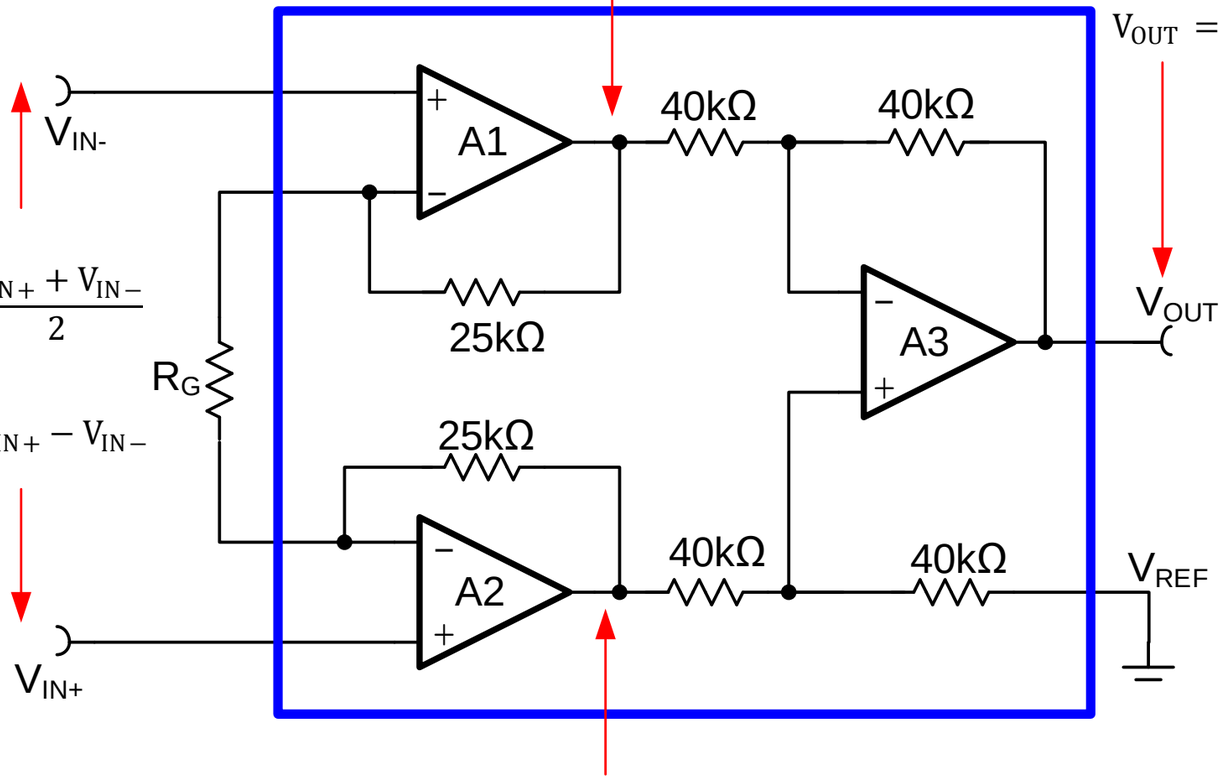

$$V_{CM} = \frac{V_{IN+} + V_{IN-}}{2}$$

$$V_{DIF} = V_{IN+} - V_{IN-}$$

$$V_{A2} = V_{CM} + \frac{V_{DIF}}{2} \cdot \left(1 + 2 \cdot \frac{R_F}{R_G}\right)$$

INA Common mode

- Output swing and common mode of internal amplifiers is a complex relationship.
- Different INAs have different topologies
- Vref, V+, V-, and gain determine common mode vs output swing relationship.
- A software tool simplifies this calculation

Verify INA Common Mode Range (INA826)

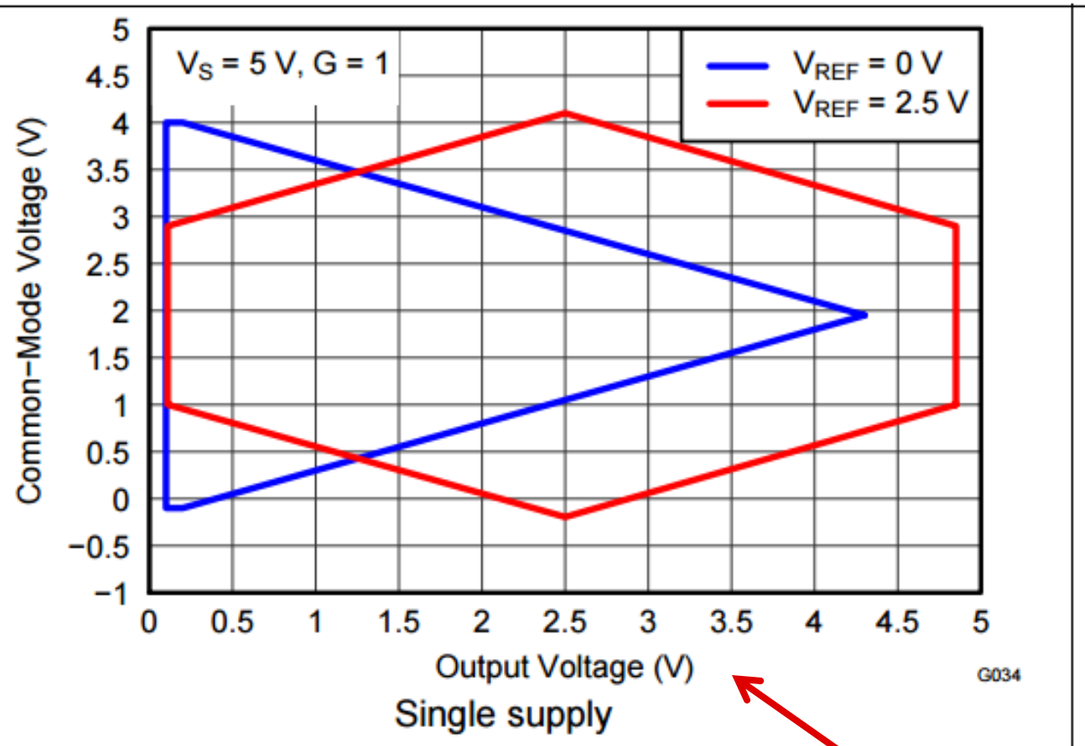

Figure 11. Input Common-Mode Voltage vs Output Voltage

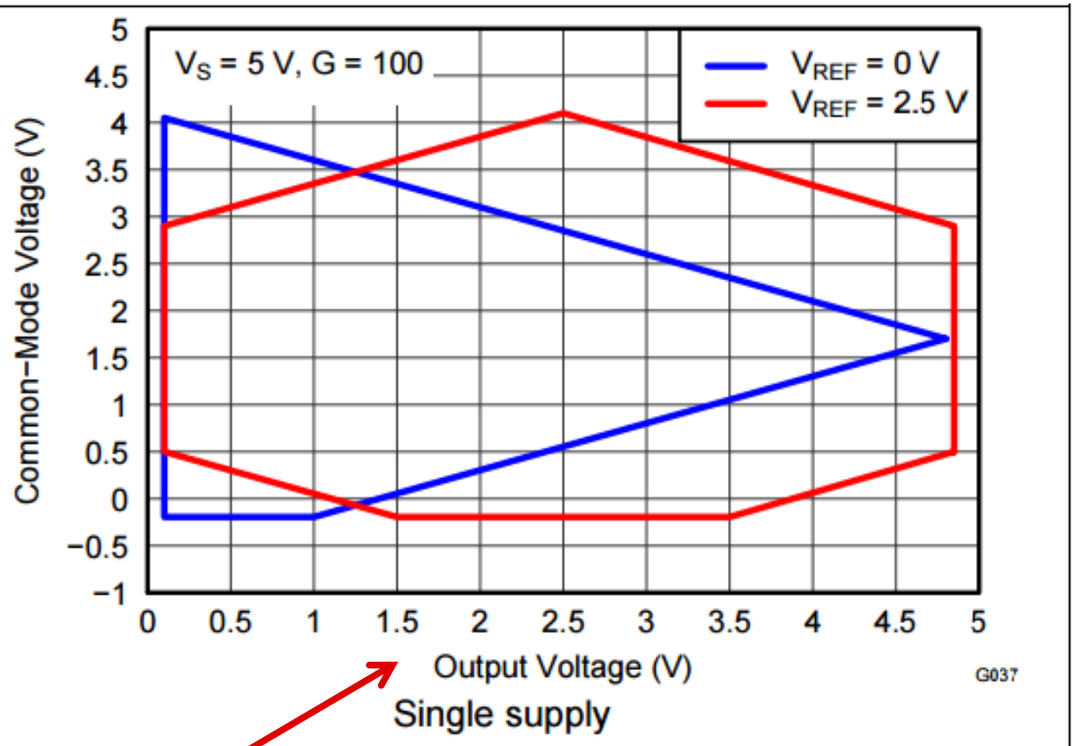

Figure 12. Input Common-Mode Voltage vs Output Voltage

Output Voltage = V_{DIF} * Gain

Verify INA Common Mode Range

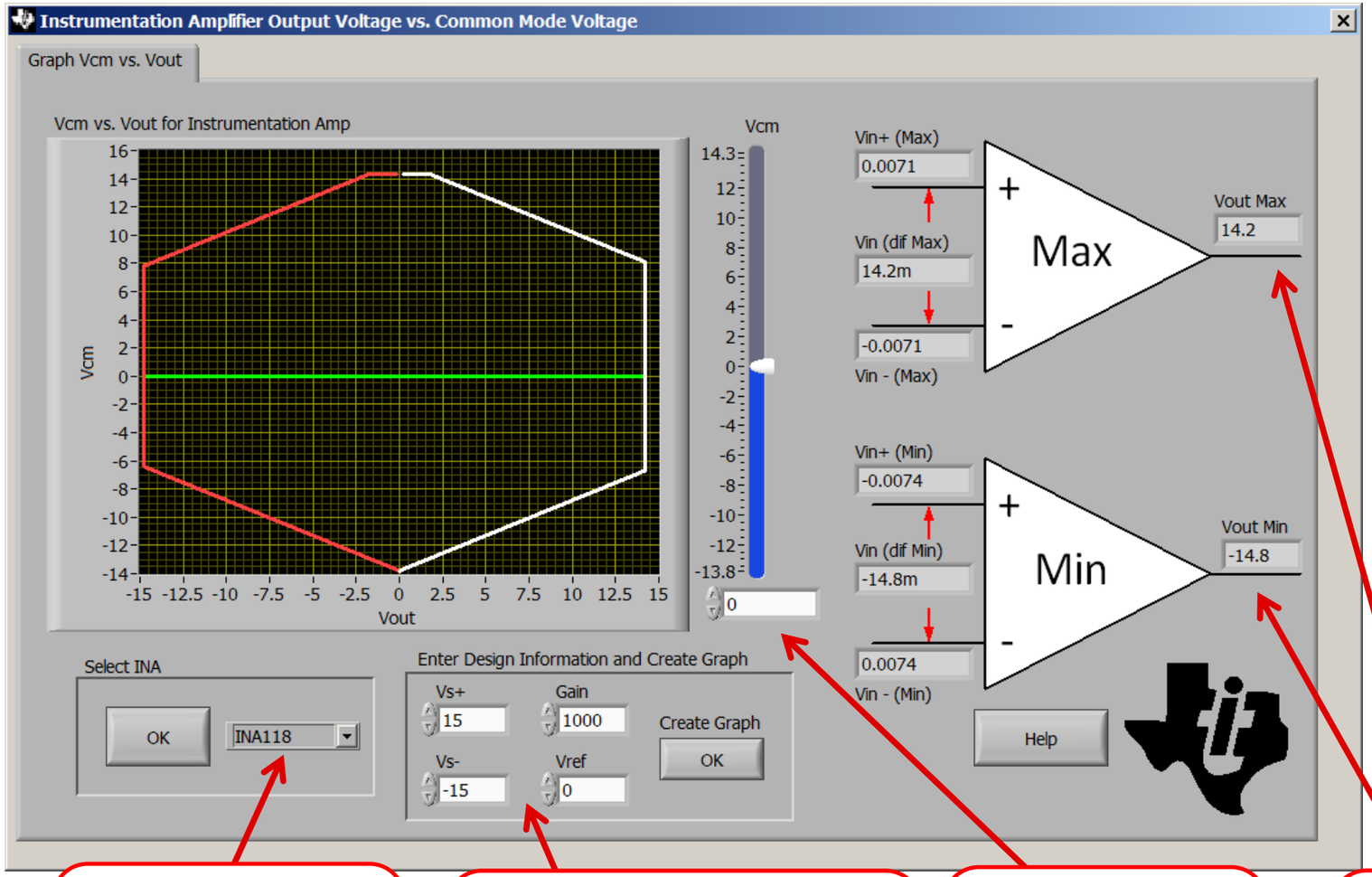

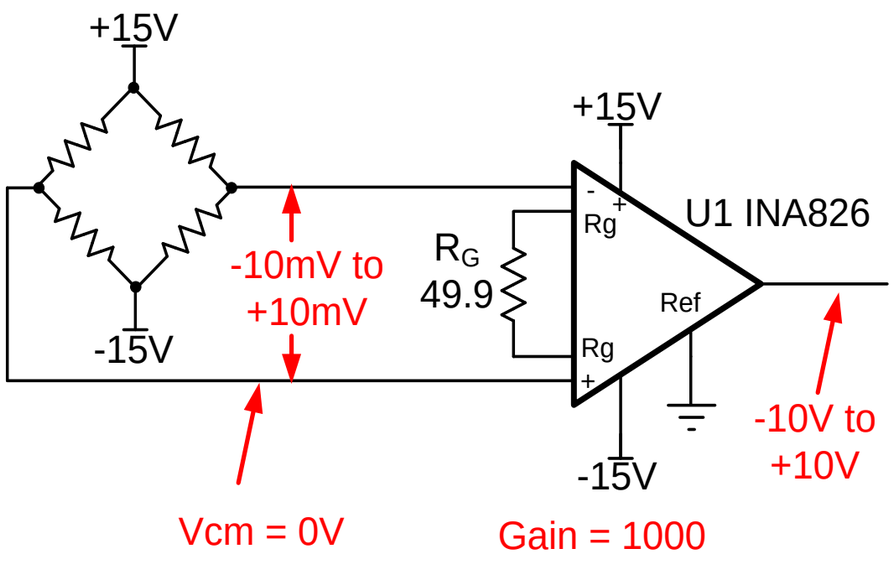

- Vout range limited to -14.8V to +14.2V
- -10V to 10V output inside the range
- http://www.ti.com/tool/ina-cmv-calc

1. Select your instrumentation amplifier

2. Enter the supplies, gain, reference and press “Create Graph”.

3. Enter the common mode voltage.

4. Does the output range work for your system?

INA: Setting the reference input

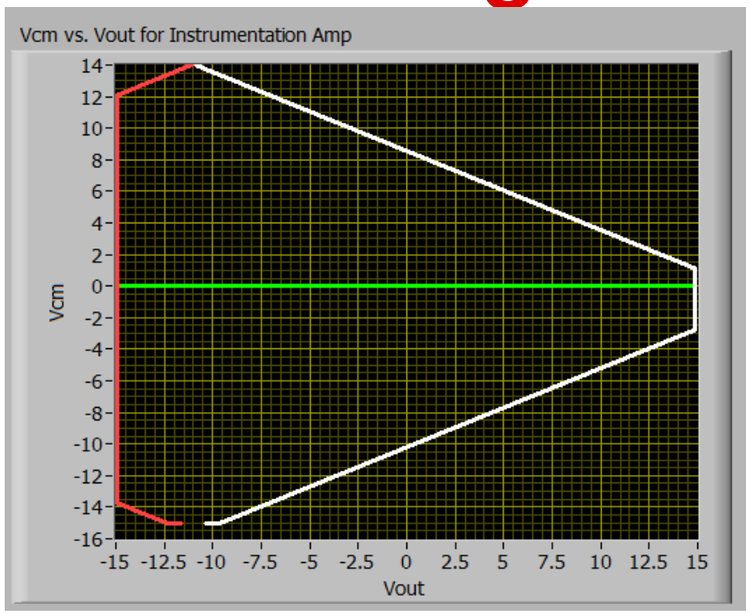

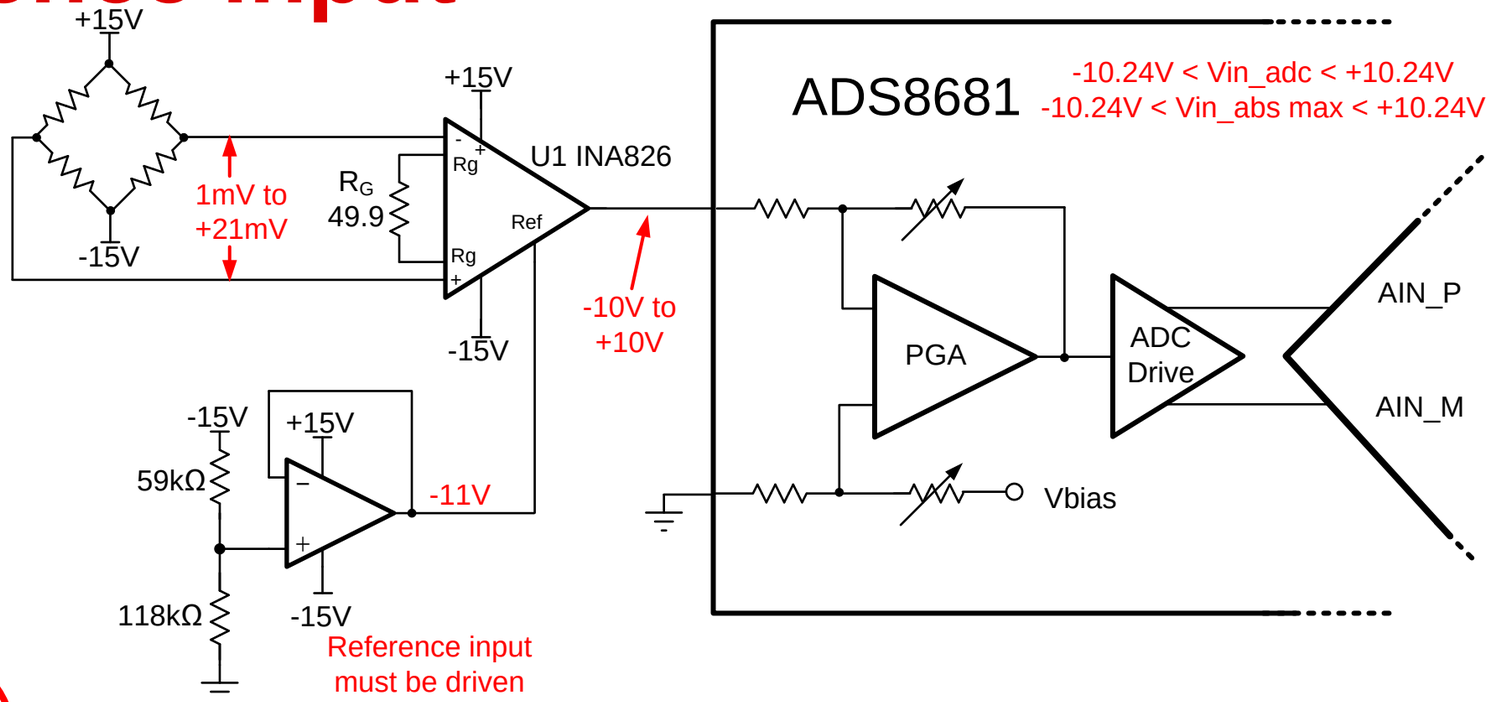

$$G_{826} = \left(\frac{\Delta V_{OUT}}{\Delta V_{IN}}\right) = \left(\frac{10V - (-10V)}{1mV - (-21mV)}\right) = 1000$$

$$G_{826} = 1 + \left(\frac{49.4k\Omega}{R_G}\right)$$

$$R_G = \frac{49.4k\Omega}{G_{826} - 1} = \frac{49.4k\Omega}{1000 - 1} = 49.5\Omega \text{ or } 49.9\Omega$$

$$V_{OUT} = G_{826} \cdot V_{IN} + V_{REF}$$

$$V_{REF} = V_{OUT_Min} - G_{826} \cdot V_{IN_Min}$$

$$V_{REF} = -10V - (1000)(1mV) = -11V$$

- Gain is calculated same as before
- Negative Vref input to shift the signal
- Reference input must be driven

Output range limited by input common mode

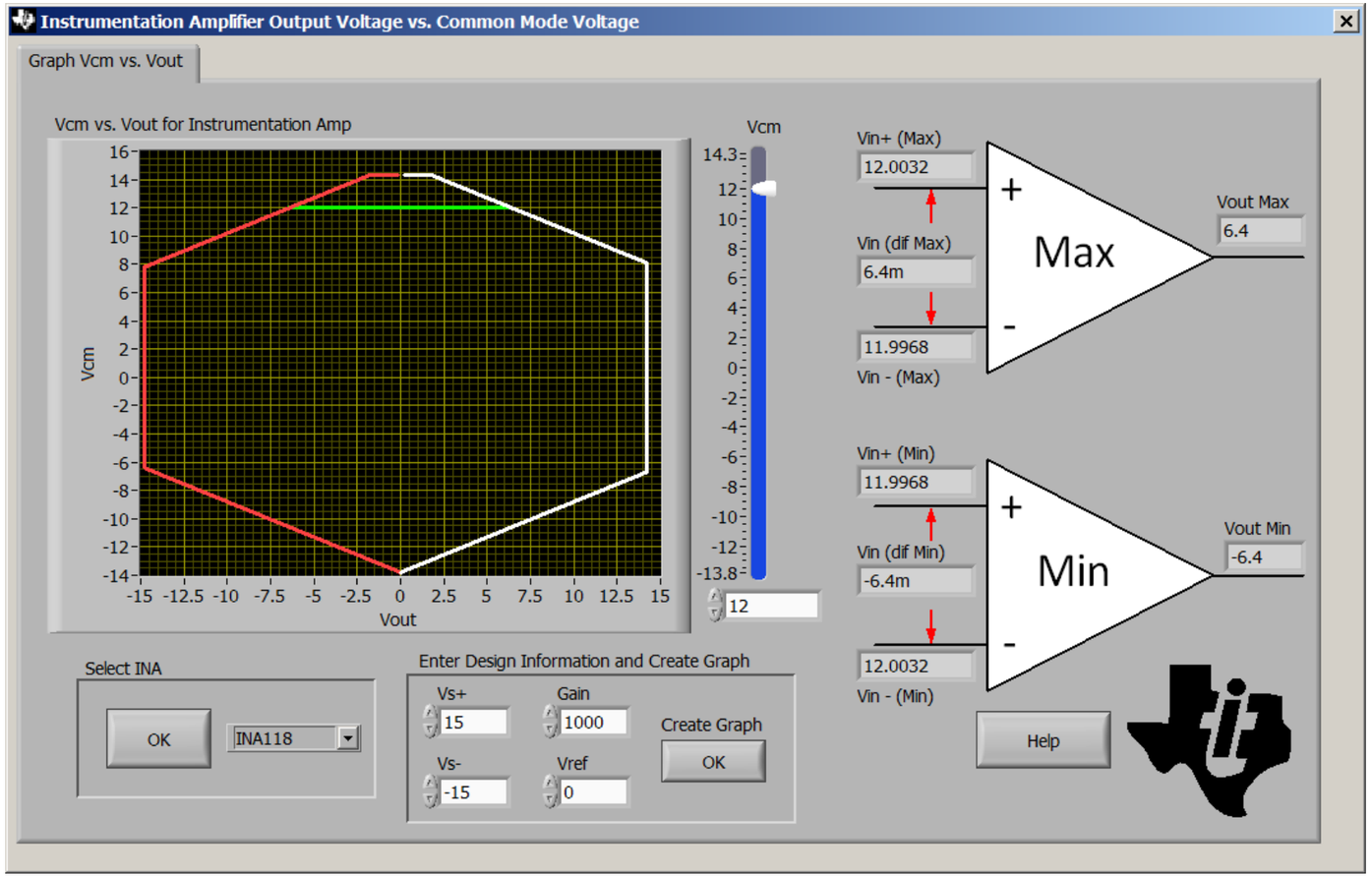

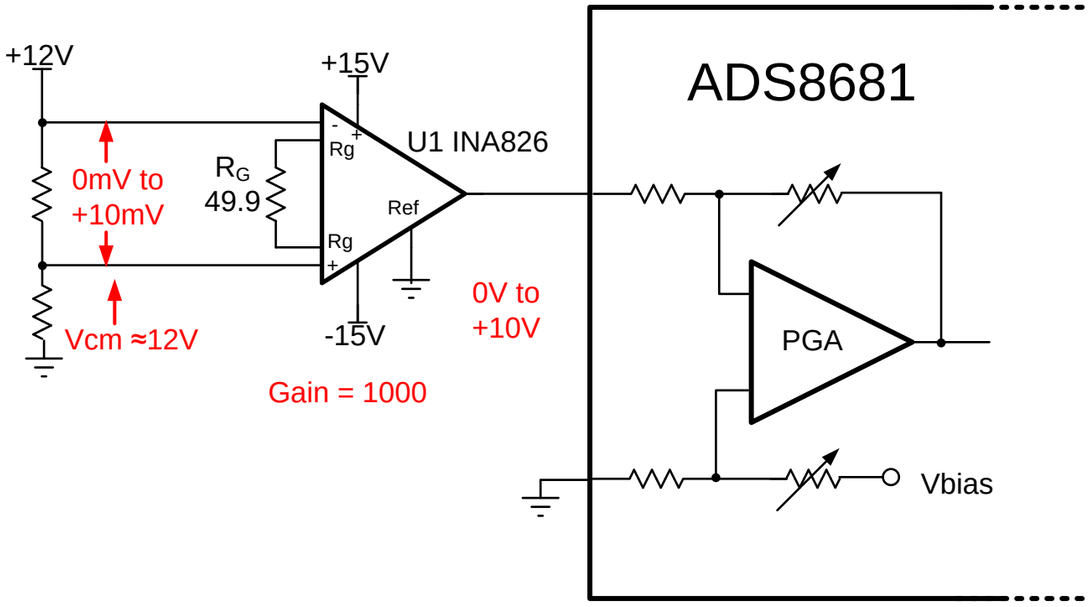

- Vout range limited to ±6.4V
- Cannot achieve 0 to 10V output

Two Stage Approach

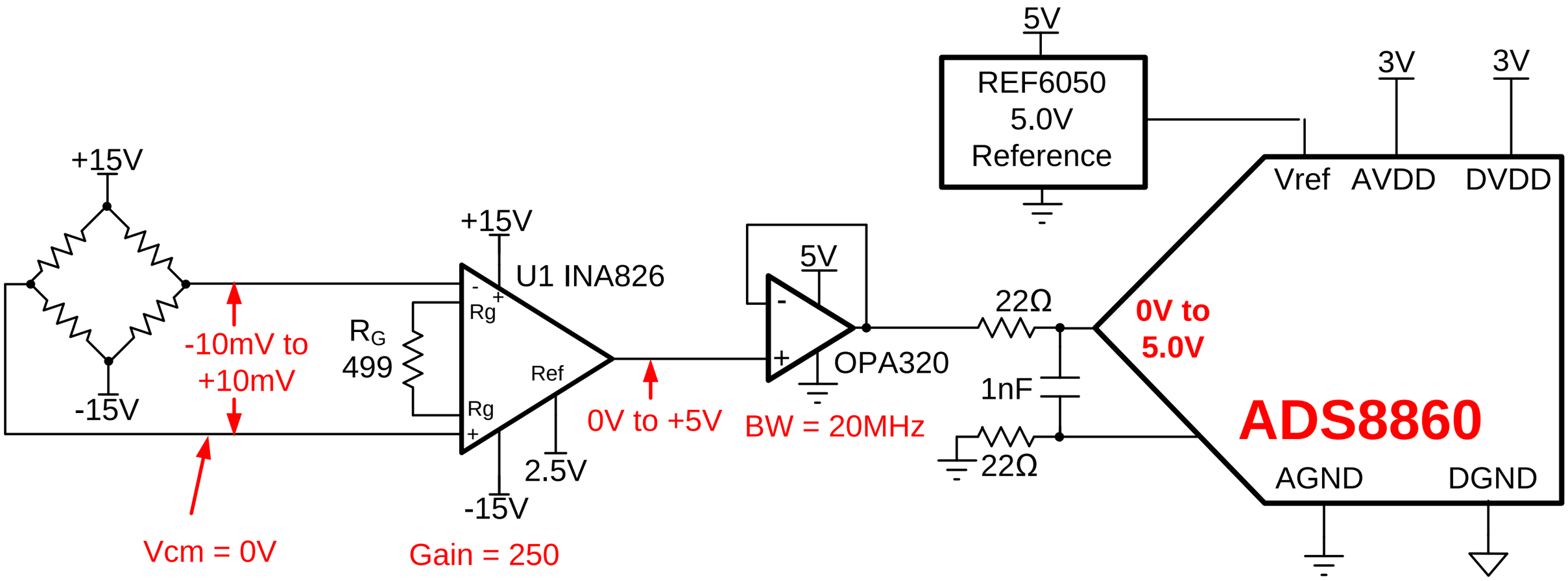

Precision DC Input **Wide Bandwidth Driver**

Fully Differential Amplifier or FDA

Standard Operational Amplifier

- Differential in
- Single-ended out
- Output Common Mode is Vout
- Single feedback paths

Fully-Differential Amplifier

- Differential in
- Differential out
- Output Common-mode set by Vocm
- Multiple feedback paths
- Double the dynamic range of amplifier
- Even order harmonic distortion canceled

Fully Differential Amplifier or FDA

Vout+ = Vcm + Vdif/2
= 2.5V + 1V/2 = 3V

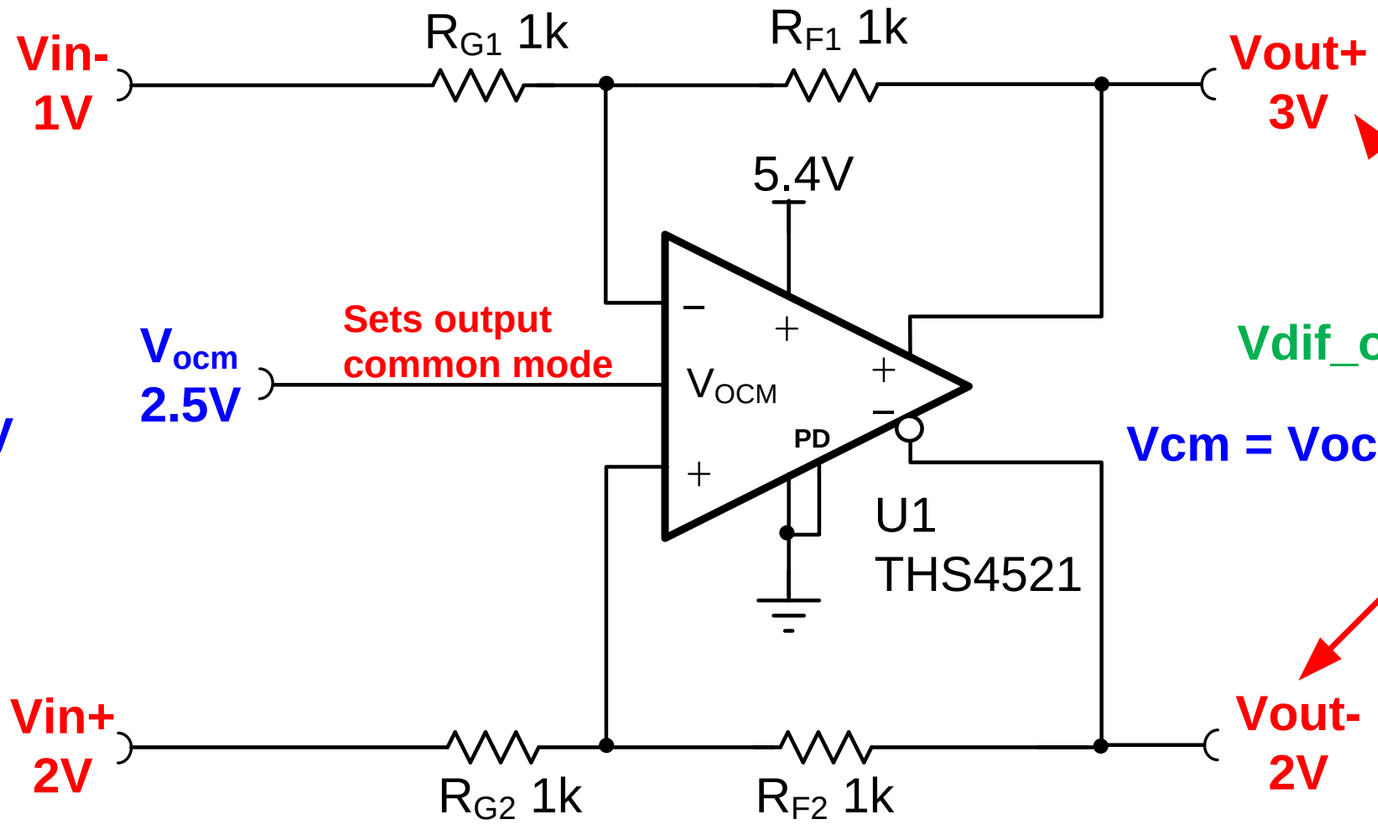

Vout- = Vcm - Vdif/2
= 2.5V - 1V/2 = 2V

FDA – Single Ended Unipolar to Differential

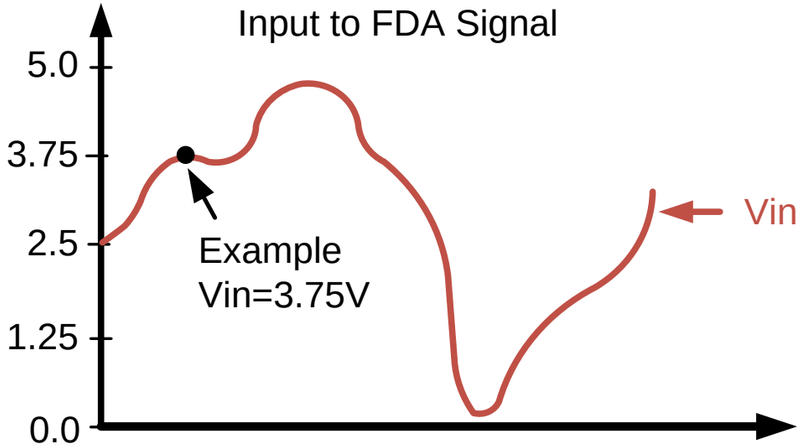

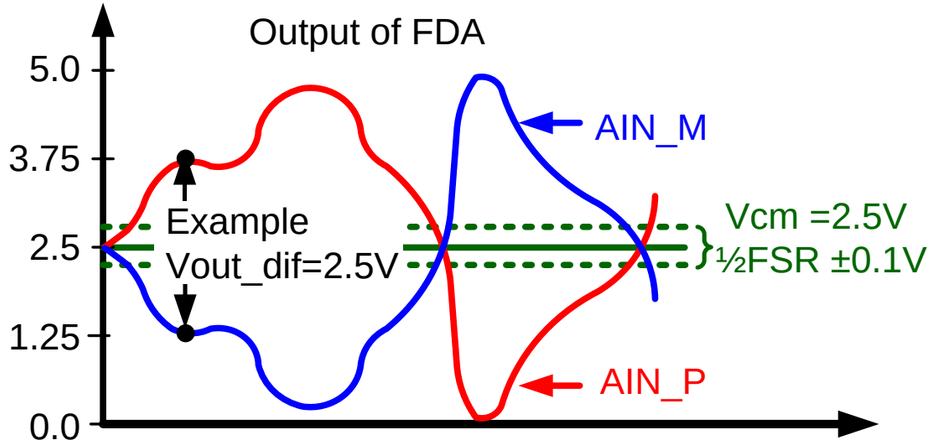

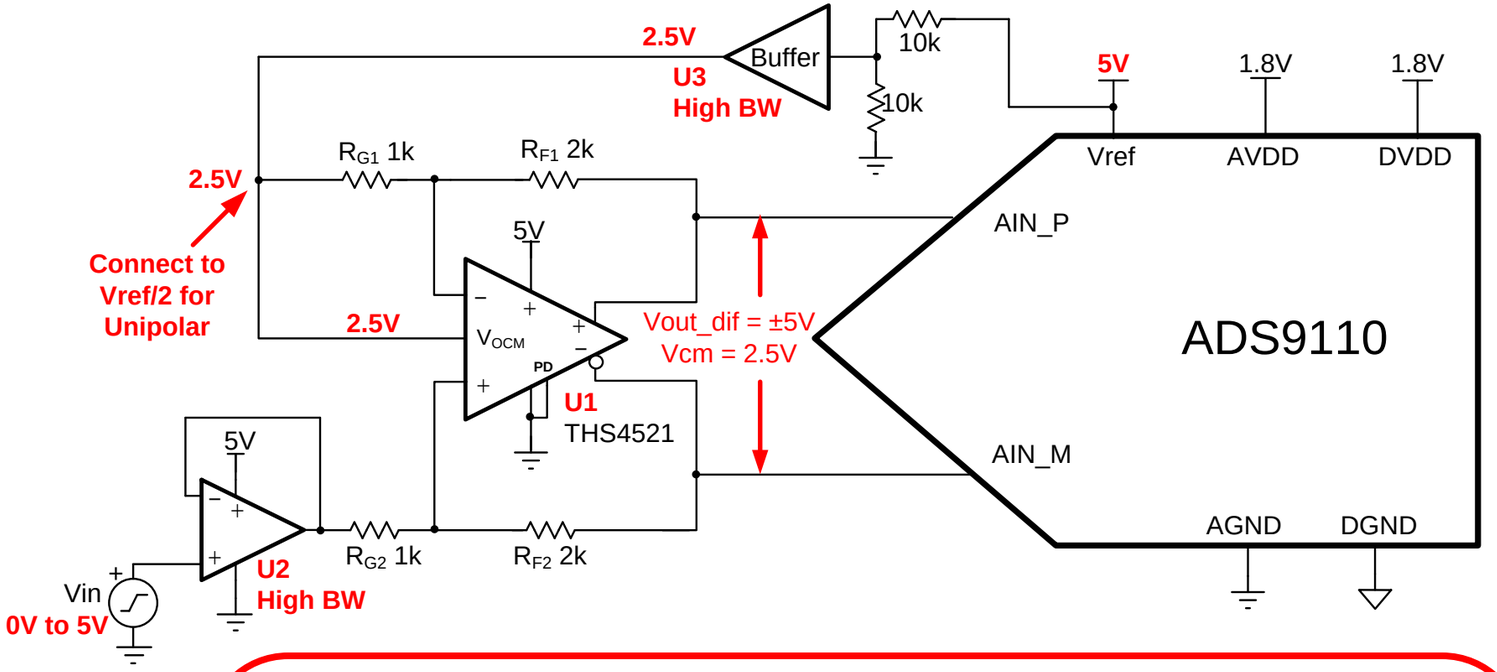

Equations for this Configuration

$$A_{vdif} = \frac{R_F}{R_G}$$

$$V_{OutP} = \left(\frac{A_{vdif}}{2}\right) \cdot (V_{in} - V_{OCM}) + V_{OCM}$$

$$V_{OutN} = -\left(\frac{A_{vdif}}{2}\right) \cdot (V_{in} - V_{OCM}) + V_{OCM}$$

$$V_{OutDif} = A_{vdif} \cdot (V_{in} - V_{OCM})$$

Example Calculation: $V_{in} = 3.75V$

$$A_{vdif} = \frac{R_F}{R_G} = \frac{2k\Omega}{1k\Omega} = 2\,V/V$$

$$V_{OutP} = \left(\frac{2}{2}\right) \cdot (3.75V - 2.5V) + 2.5V = 3.75V$$

$$V_{OutN} = -\left(\frac{2}{2}\right) \cdot (3.75V - 2.5V) + 2.5V = 1.25V$$

$$V_{OutDif} = 2 \cdot (3.75V - 2.5V) = 2.5V$$

FDA – Single Ended Bipolar to Differential

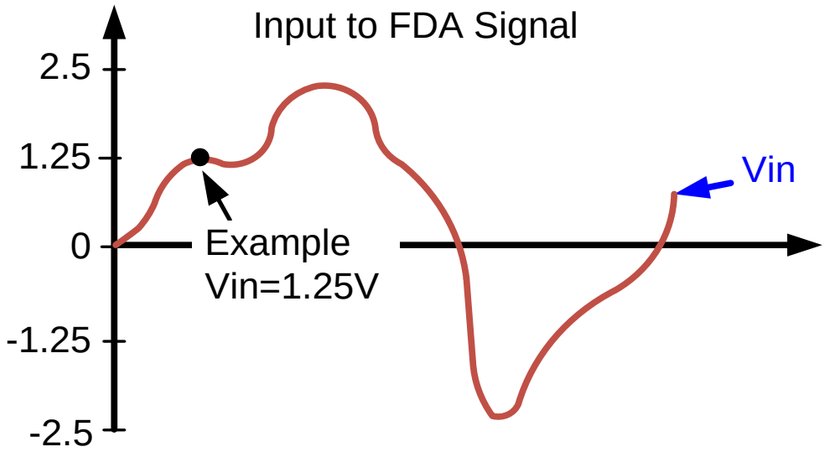

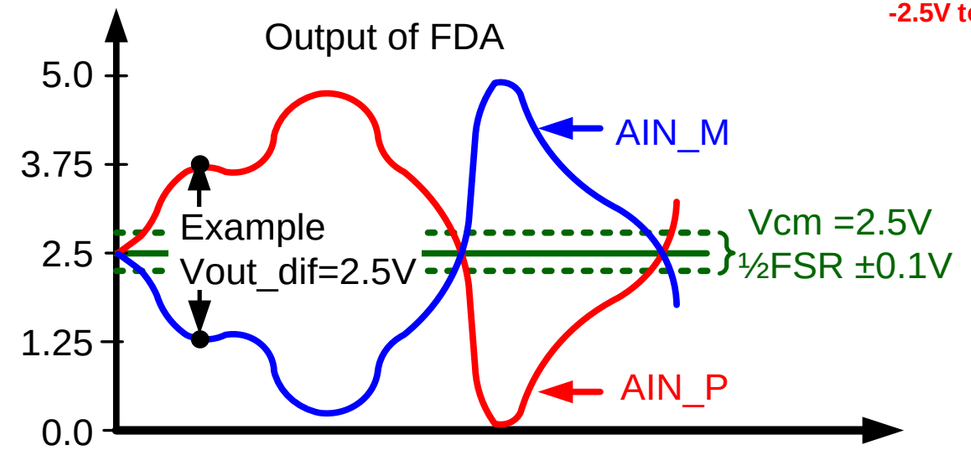

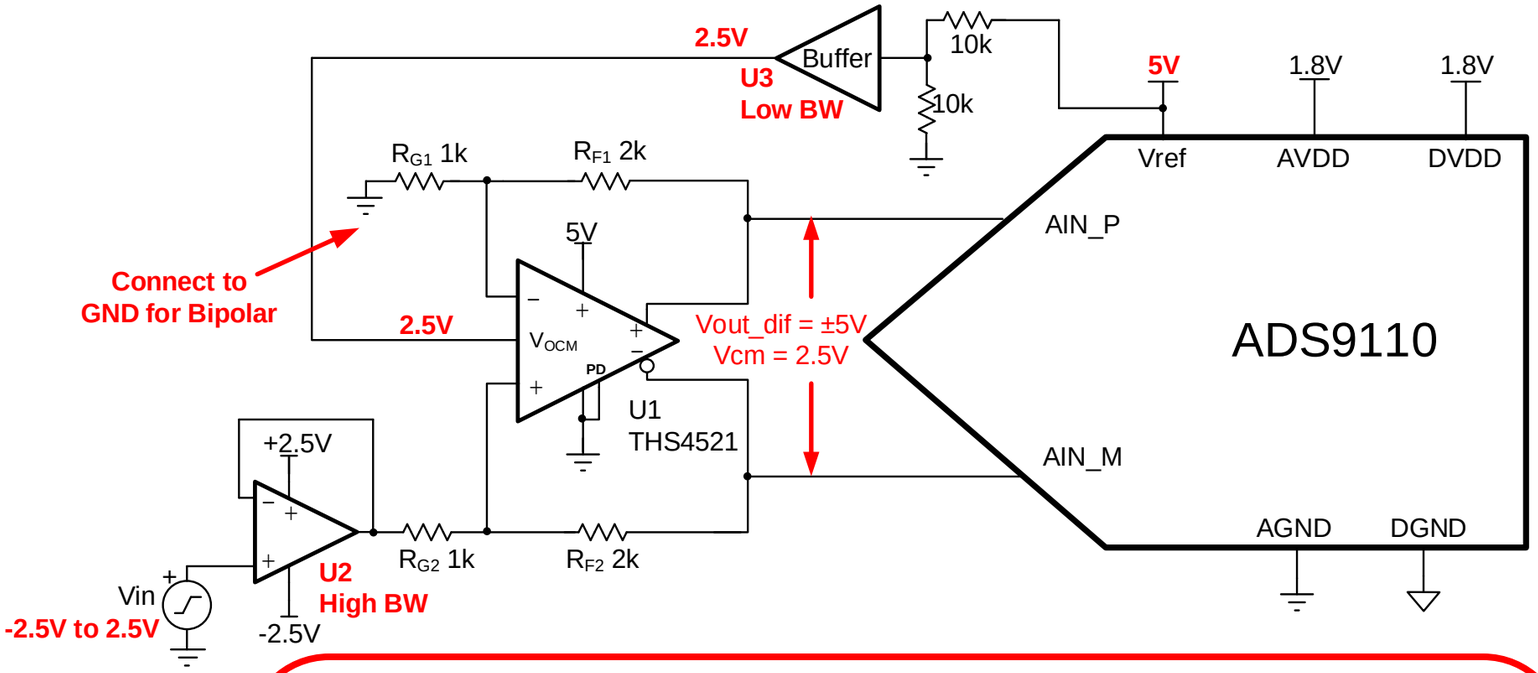

Equations for this Configuration

$$A_{vdif} = \frac{R_F}{R_G}$$

$$V_{OutP} = \left(\frac{A_{vdif}}{2}\right) \cdot (V_{in}) + V_{OCM}$$

$$V_{OutN} = -\left(\frac{A_{vdif}}{2}\right) \cdot (V_{in}) + V_{OCM}$$

$$V_{OutDif} = A_{vdif} \cdot (V_{in})$$

Example Calculation: $V_{in} = 1.25V$

$$A_{vdif} = \frac{R_F}{R_G} = \frac{2k\Omega}{1k\Omega} = 2\,V/V$$

$$V_{OutP} = \left(\frac{2}{2}\right) \cdot (1.25V) + 2.5V = 3.75V$$

$$V_{OutN} = -\left(\frac{2}{2}\right) \cdot (1.25V) + 2.5V = 1.25V$$

$$V_{OutDif} = 2 \cdot (3.75V - 1.25V) = 2.5V$$

Improve Linear Range

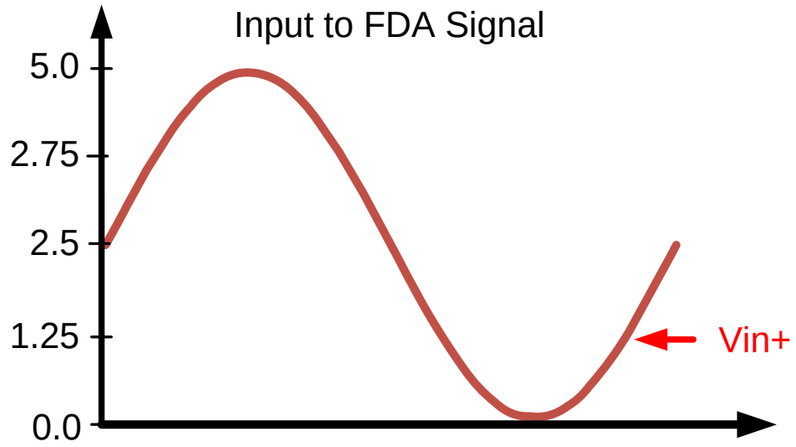

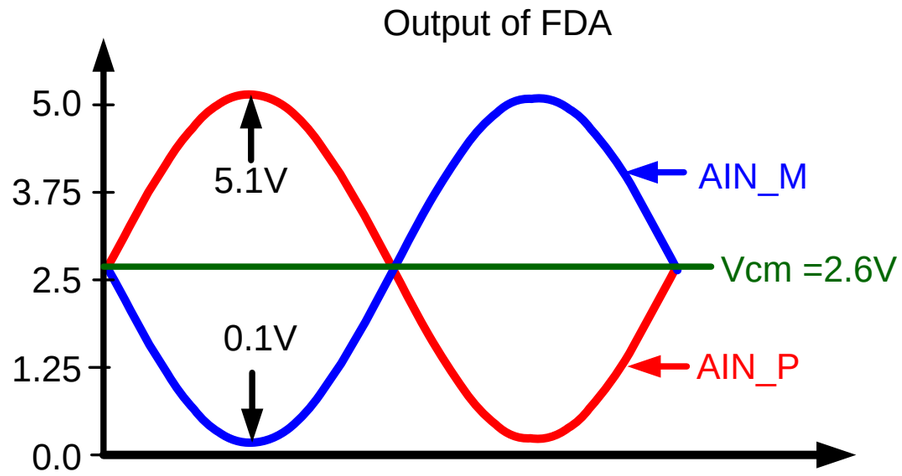

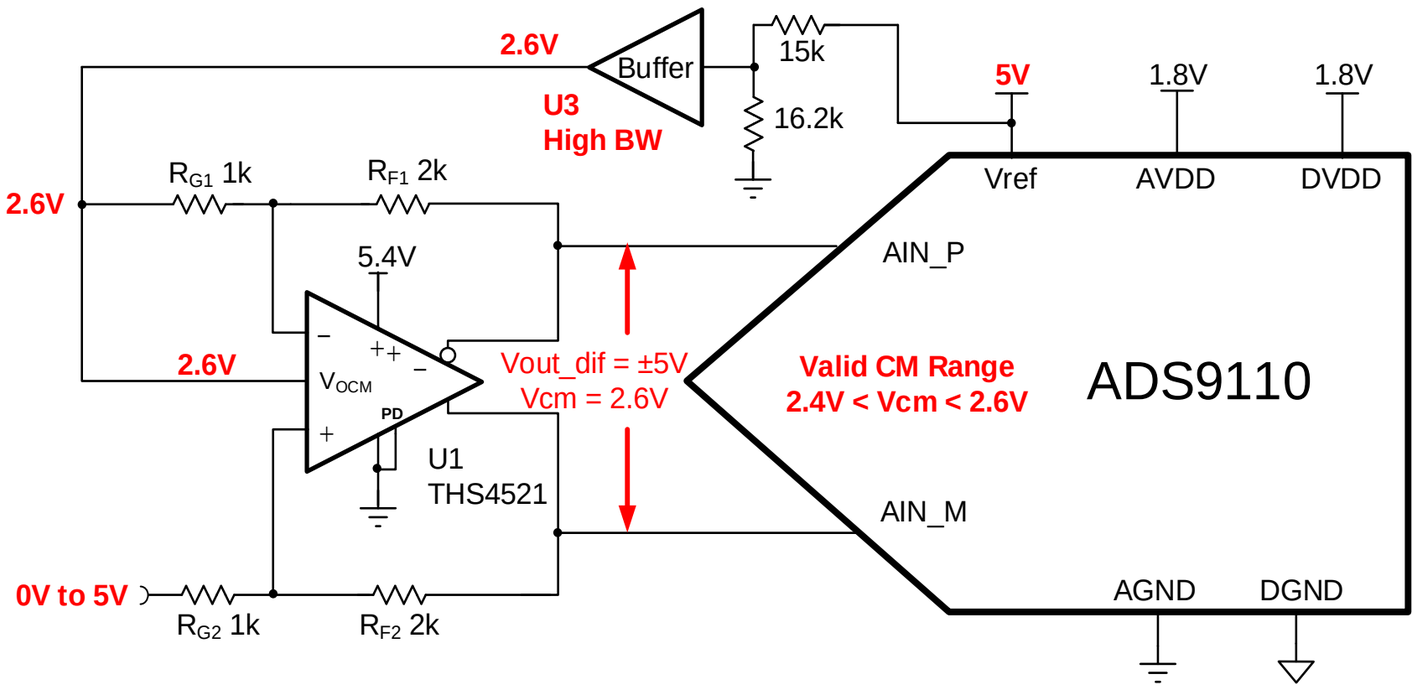

PARAMETER THS4521		MIN	TYP	MAX	UNIT
Output voltage low			(V-) + 0.1	(V-) + 0.15	V
Output voltage high		(V+) – 0.3	(V+) – 0.25		V

PARAMETER ADS9110		MIN	TYP	MAX	UNIT
Full-scale input voltage span		-Vref		Vref	V
Absolute Input voltage range	AIN to GND	-0.1		AVDD+0.1	V
Common-mode voltage range		(Vref/2)-0.1	Vref/2	(Vref/2)+0.1	V

Finding standard resistors for unusual gains

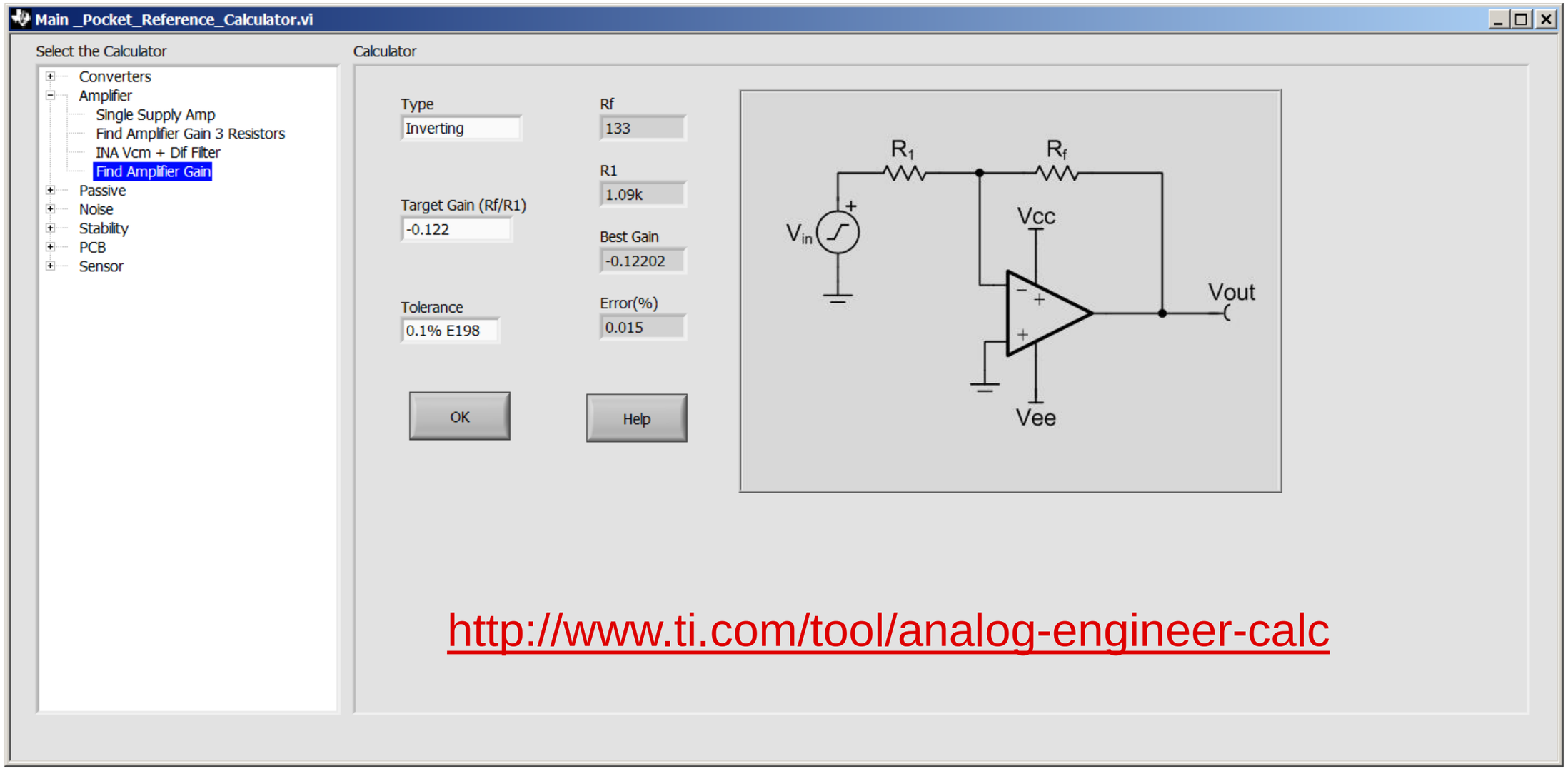

http://www.ti.com/tool/analog-engineer-calc

Agenda

1. **ADC Input types**
   a) Single ended, pseudo-differential, fully-differential, and true-differential
   b) Switched capacitor vs. buffered
2. **Linear operation of amplifier and ADC**
   a) Rail-to-Rail amplifiers and crossover distortion
   b) Inverting configuration
3. **Common Front Ends**
   a) Instrumentation amplifier: Selecting gain and common mode range
   b) Fully Differential Amplifiers: Single Ended to Differential
4. **Error Sources:**
   a) **Offset and Gain Error**
   b) **Calibration**
   c) **Drift and Non-linearity**
   d) **Noise**
5. **AC Specifications**
6. **Aliasing**

Offset and Gain Calibration: two test signals

Two Precision inputs applied

Make sure amplifiers are in linear range

Average code read

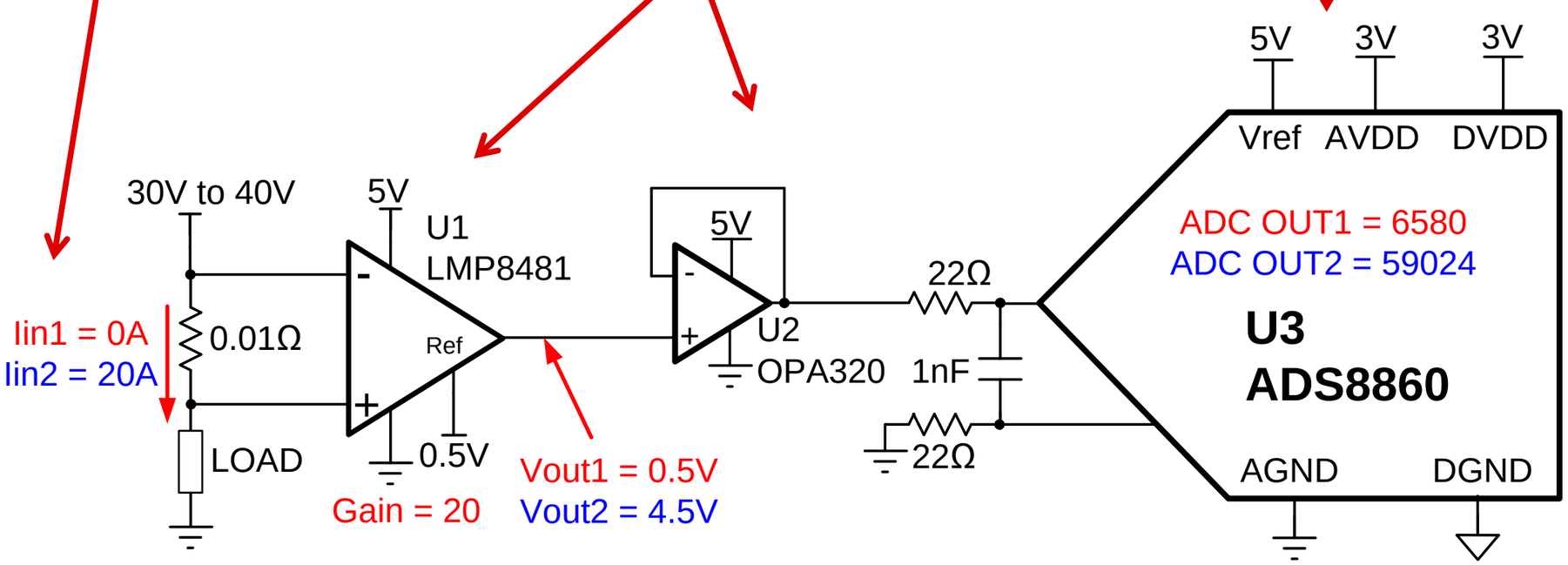

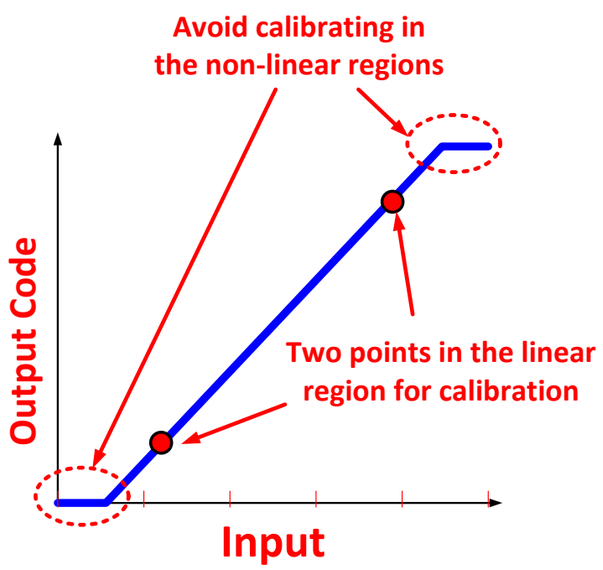

Calibration Example

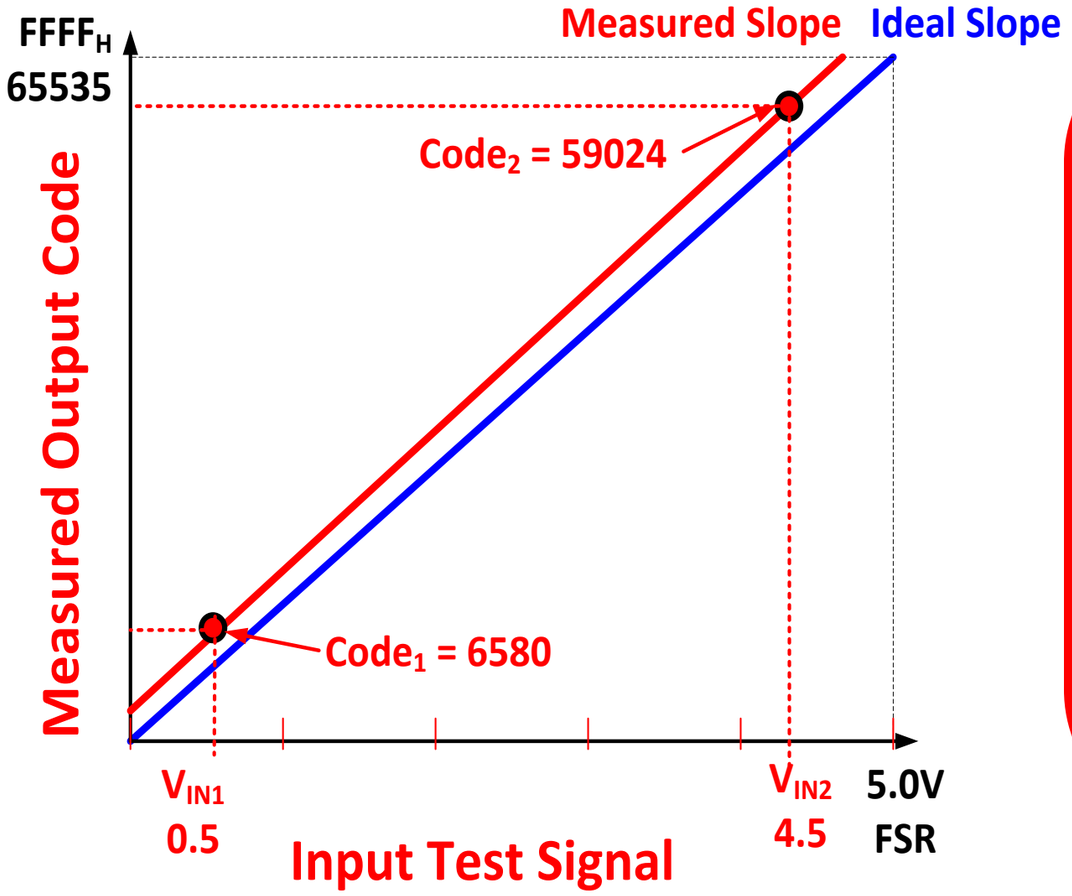

Example calculation for Offset and Gain Error:

$V_{IN1} = 0.5V$	Apply 0A
$V_{IN2} = 4.5V$	Apply 20A
$m_m = \frac{Code_2 - Code_1}{V_{IN2} - V_{IN1}} = \frac{59024 - (6580)}{4.5 - 0.5} = 13111$	Compute Slope based on codes
$b_m = Code_1 - m_m \cdot V_{IN1} = 6580 - 13111 \cdot 0.5 = 24.5$	Offset
$V_{IN_applied} = 2.0V$	Example Input
$Code = 26246$	Output code
$V_{IN_uncal} = Code \cdot LSB = 26246 \cdot 76.029\mu V = 2.002V$	Uncalibrated 2mV error
$V_{IN} = \frac{Code - b_m}{m_m} = \frac{26246 - (24.5)}{13111} = 2.0000V$	Calibration eliminates error

Error Sources that are difficult to Calibrate

- Temperature Drift
- Non-linearity
- Long term shift (Aging)
- Hysteresis
- Noise

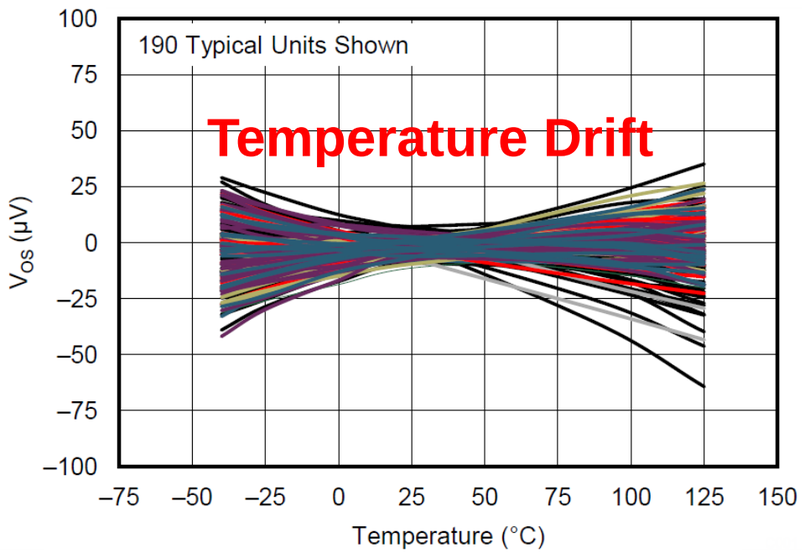

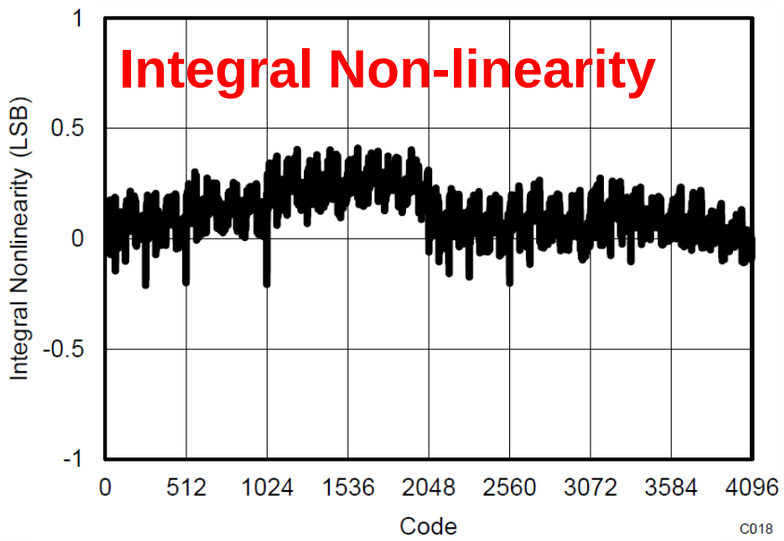

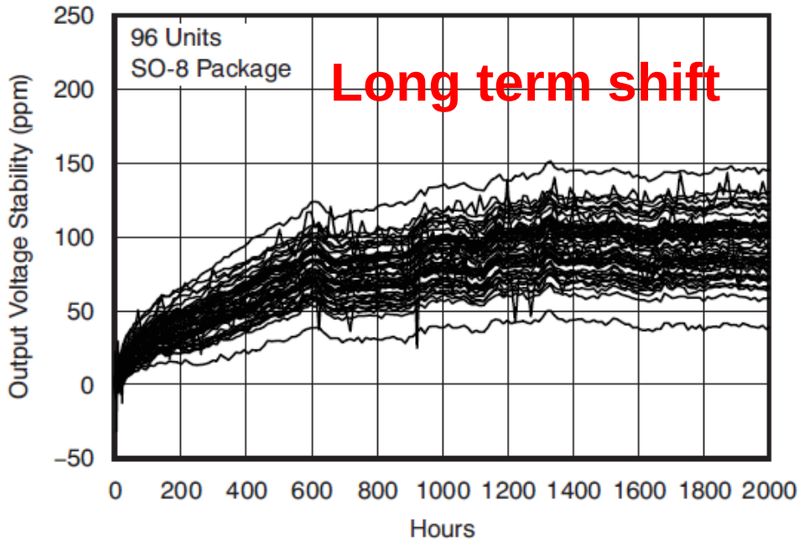

SNR of Amplifier + ADC: General Equations

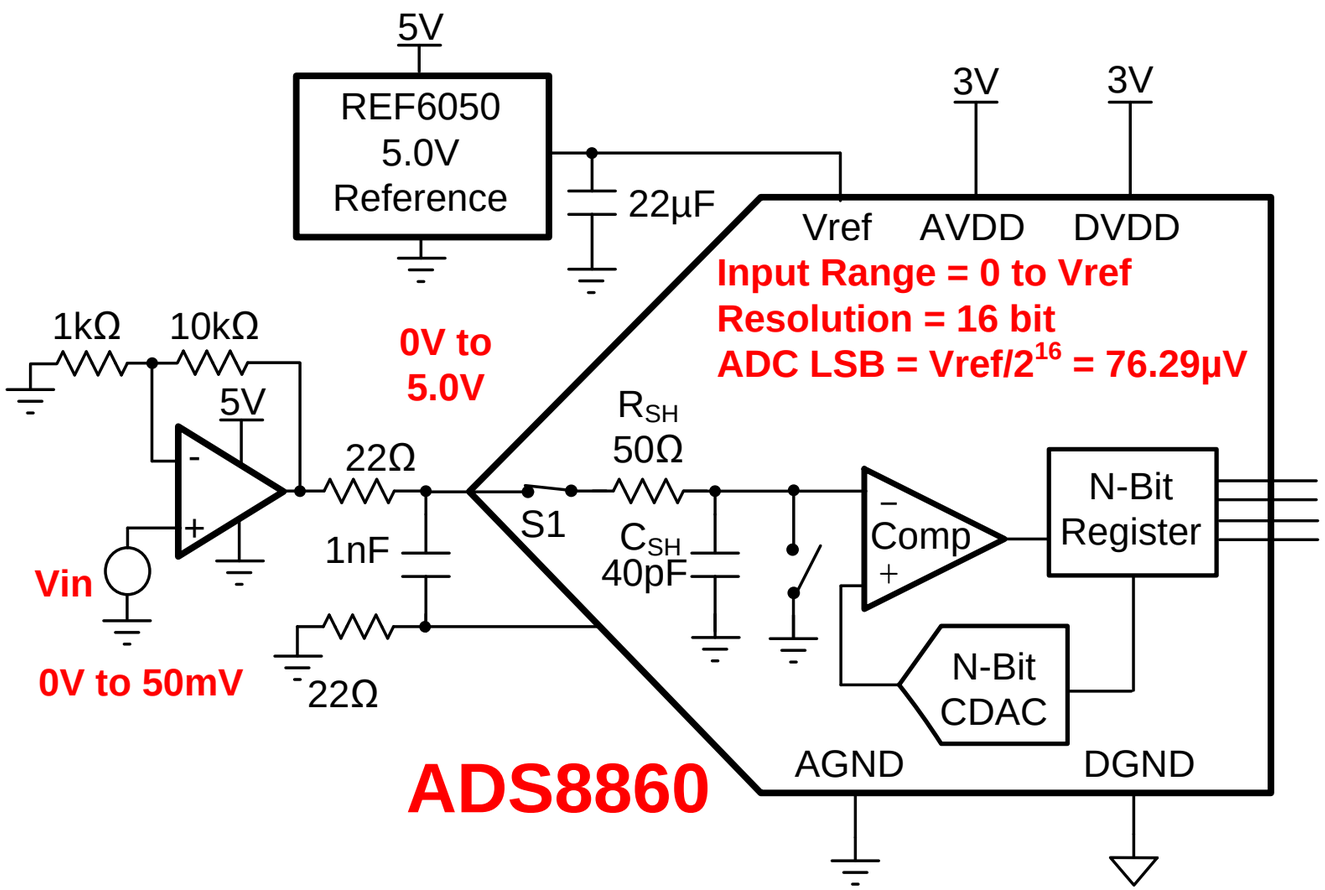

$$SNR_{ADC} = 20 \cdot \log\left(\frac{V_{FSR_rms}}{V_{nADC}}\right)$$ Solve for noise

$$V_{nADC} = \frac{V_{FSR_rms}}{10^{\left(\frac{SNR_{ADC}}{20}\right)}}$$ From ADC data sheet

$$V_{nT} = \sqrt{(V_{nADC})^2 + (V_{nAmp})^2 + (V_{nRef})^2}$$ Total RMS Noise

$$SNR_{total} = 20 \cdot \log\left(\frac{V_{FSR_rms}}{V_{nT}}\right)$$ ADC+Amp+Ref

SNR of Amplifier + ADC: Example Calculation

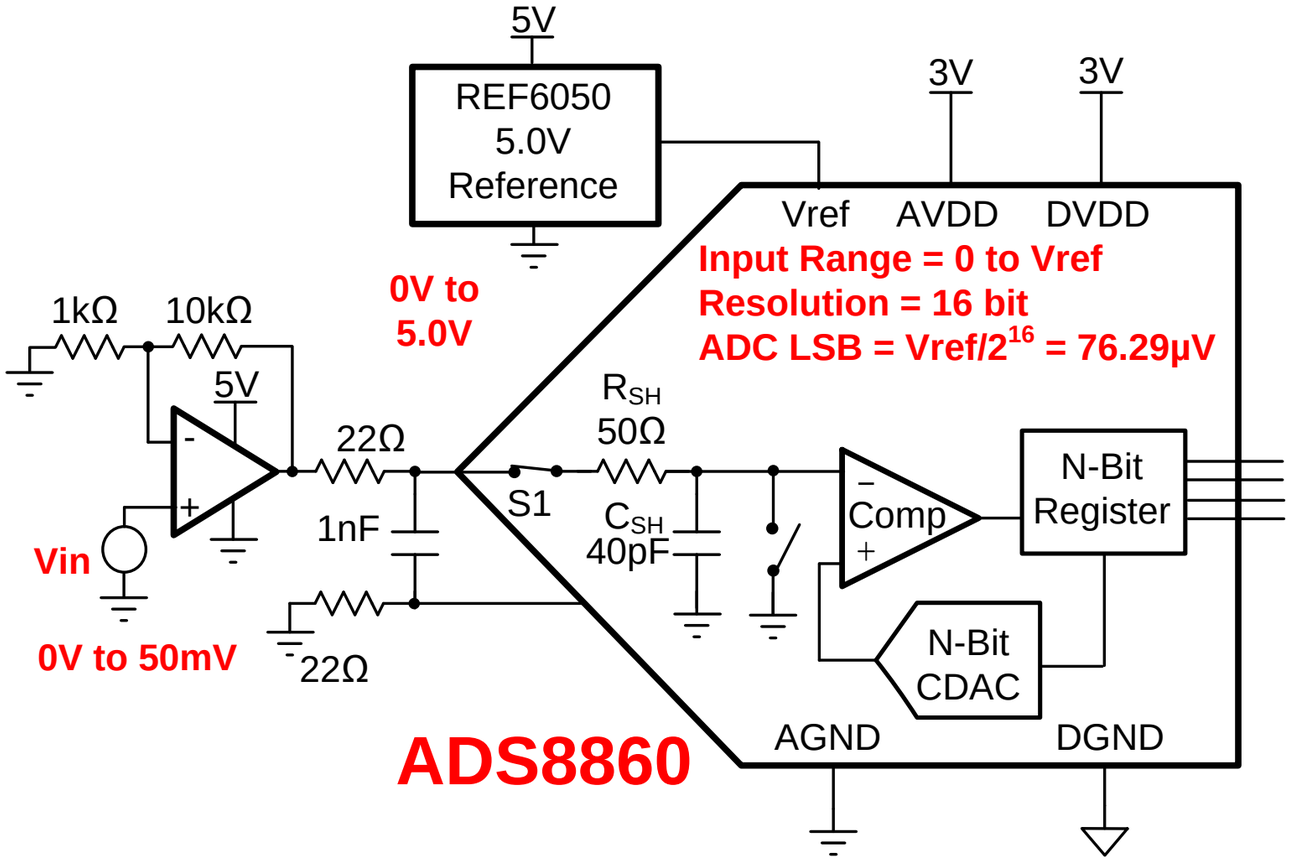

$$V_{FSR_rms} = V_{FSRpk} \cdot 0.707$$
$$V_{FSR_rms} = 0.5 \cdot FSR \cdot 0.707$$
$$= 0.5 \cdot 5V \cdot 0.707 = 1.767V$$

$$V_{nADC} = \frac{V_{FSR_rms}}{10^{\left(\frac{SNR_{ADC}}{20}\right)}} = \frac{1.767V}{10^{\left(\frac{93dB}{20}\right)}} = 39.6\mu V\ rms$$

$$V_{nT} = \sqrt{(V_{nADC})^2 + \left(V_{nAmp}\right)^2 + (V_{nRef})^2}$$
$$= \sqrt{(36.9\mu V)^2 + (128.8\mu V)^2 + (6.3\mu V)^2} = 134\mu V\ rms$$

$$SNR_{total} = 20 \cdot \log\left(\frac{V_{FSR_{rms}}}{V_{nT}}\right) = 20 \cdot \log\left(\frac{1.767V}{134\mu V}\right) = 82.4\ dB$$

Signal Chain Noise: Analog Engineer's Calculator

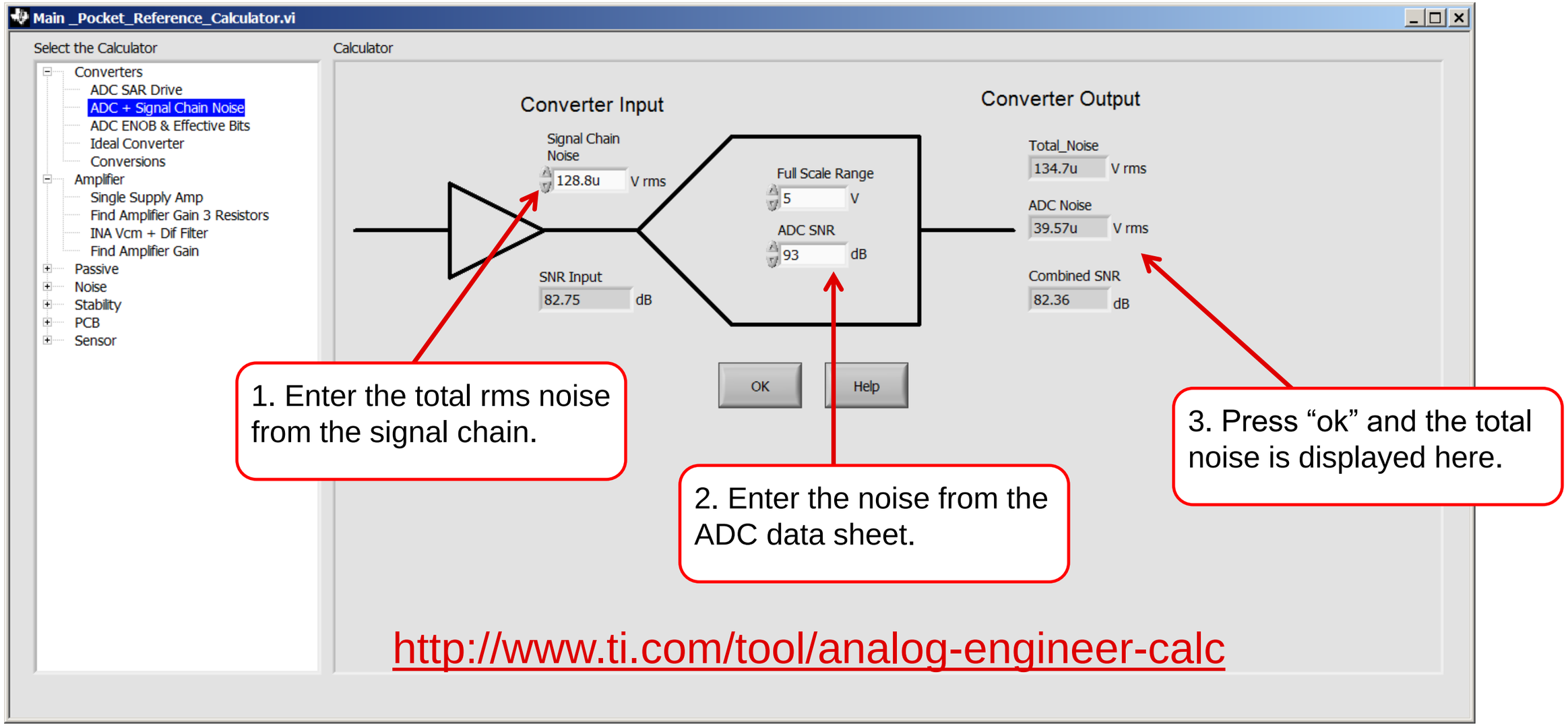

Averaging to Reduce Noise

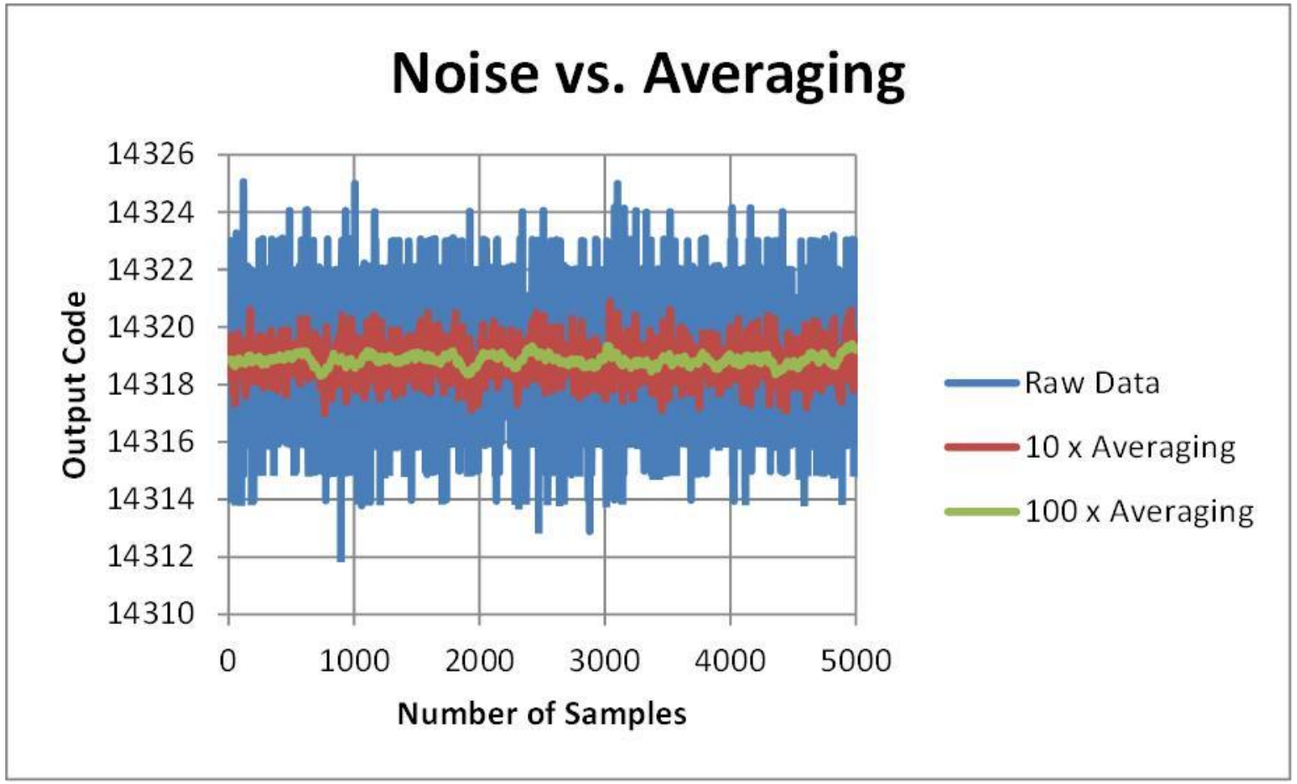

Measured vs. Calculated Averaging

	Measured RMS codes	Calculated RMS codes
Standard Deviation Raw Data	1.80	na
Standard Deviation 10 x Averaging	0.59	0.57
Standard Deviation 100 x Averaging	0.18	0.18

$$\mathrm{V_{nAvg}} = \frac{V_n}{\sqrt{N}}$$

Where
V_n *is the RMS noise*
N *is the number of averages*
V_{nAvg} *is the RMS noise after averaging*

$$\mathrm{V_{nAvg}} = \frac{V_n}{\sqrt{N}} = \frac{1.8\ codes}{\sqrt{10}} = 0.57\ codes$$

$$SNR_{avg} = 20 \cdot \log\left(\frac{\mathrm{V}_s}{V_n/\sqrt{N}}\right) = 20 \cdot \log\left(\frac{\mathrm{V}_s}{V_n}\right) + 10 \cdot \log(N)$$

Agenda

1. **ADC Input types**
   a) Single ended, pseudo-differential, fully-differential, and true-differential
   b) Switched capacitor vs. buffered
2. **Linear operation of amplifier and ADC**
   a) Rail-to-Rail amplifiers and crossover distortion
   b) Inverting configuration
3. **Common Front Ends**
   a) Instrumentation amplifier: Selecting gain and common mode range
   b) Fully Differential Amplifiers: Single Ended to Differential
4. **Error Sources:**
   a) Offset and Gain Error
   b) Calibration
   c) Drift and Non-linearity
   d) Noise
5. **AC Specifications**
6. **Aliasing**

Dynamic Characteristics

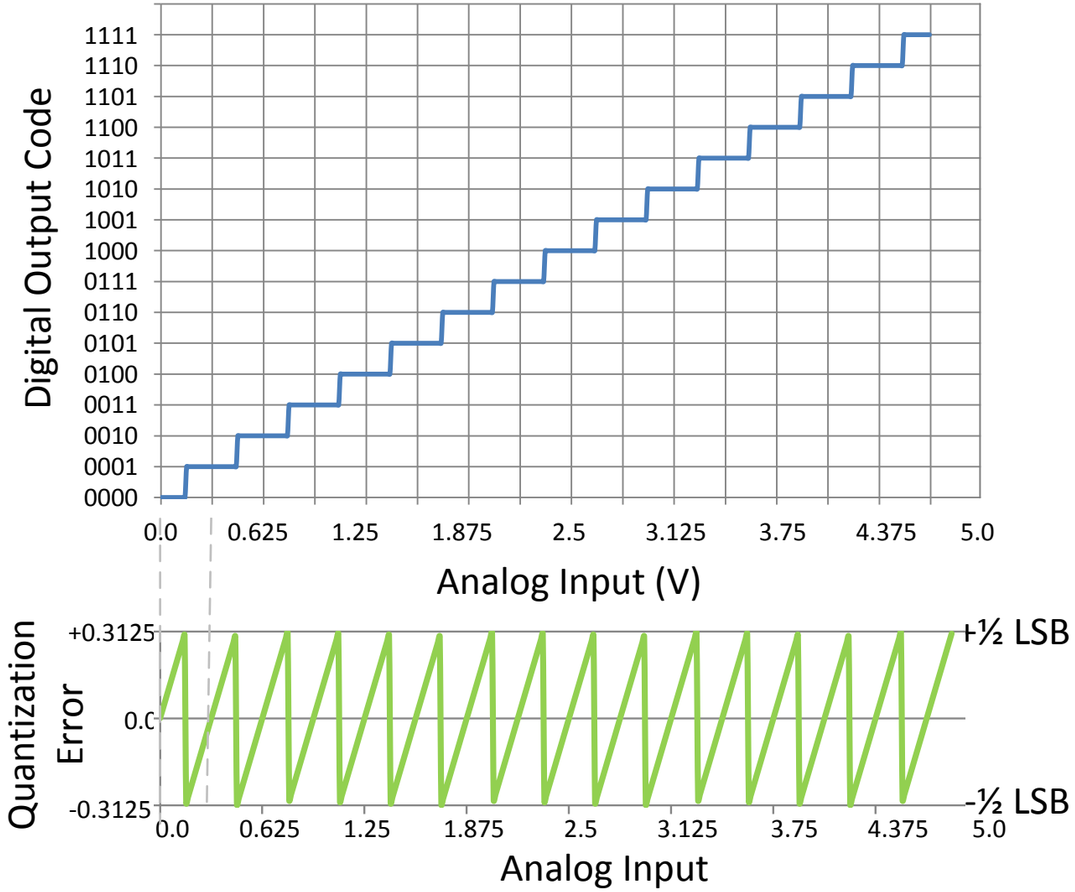

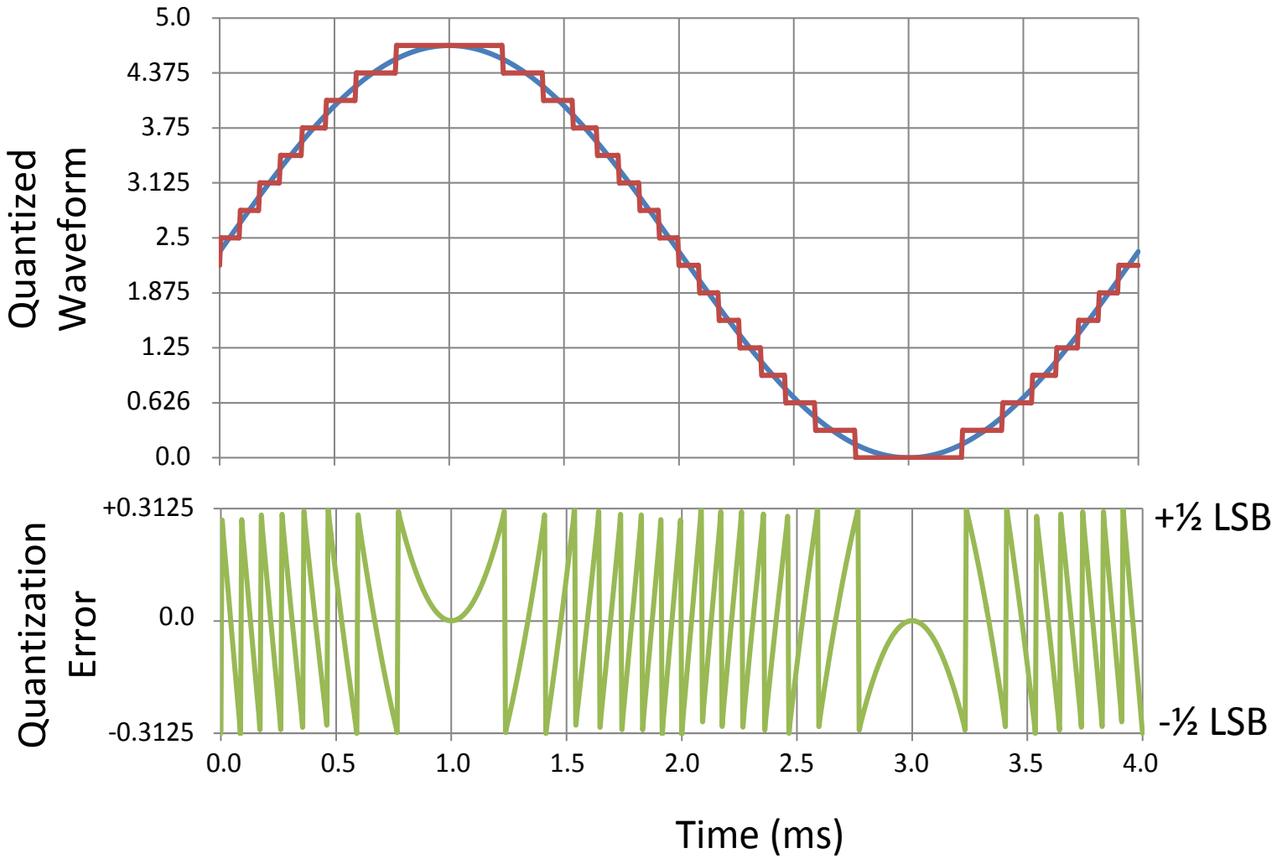

Signal to Noise Ratio (SNR)

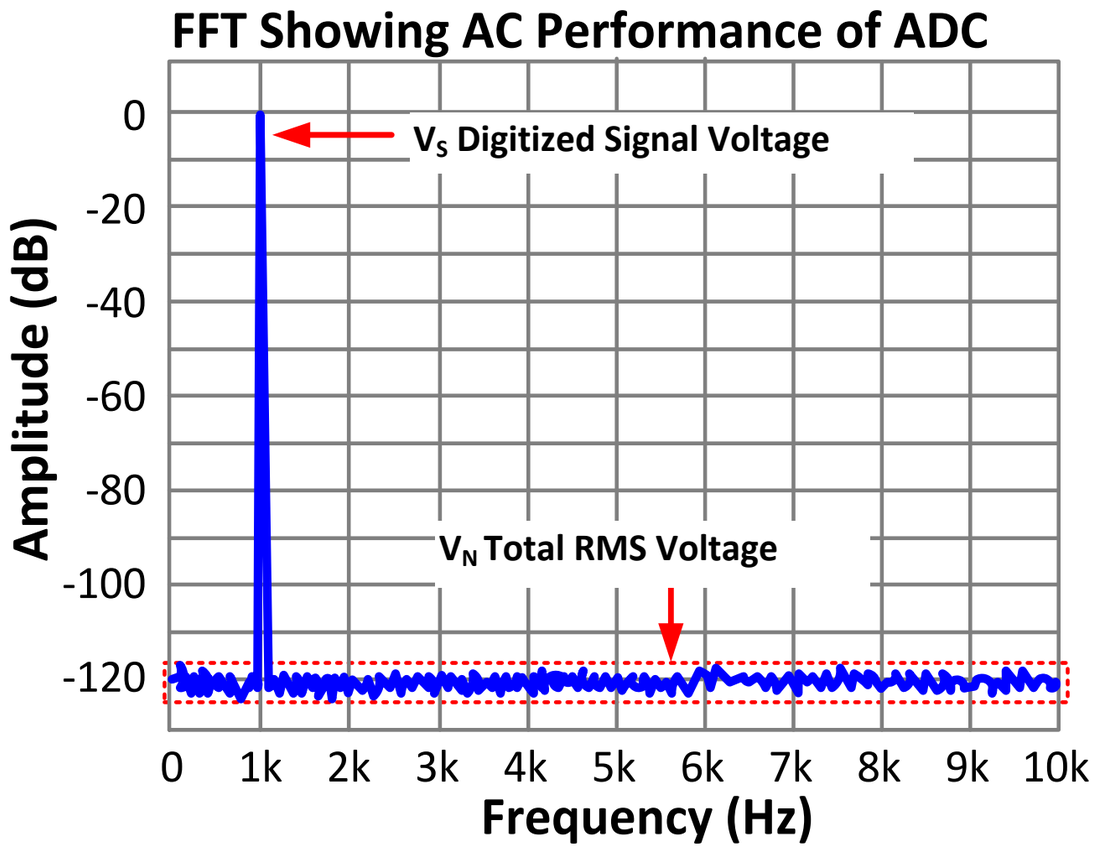

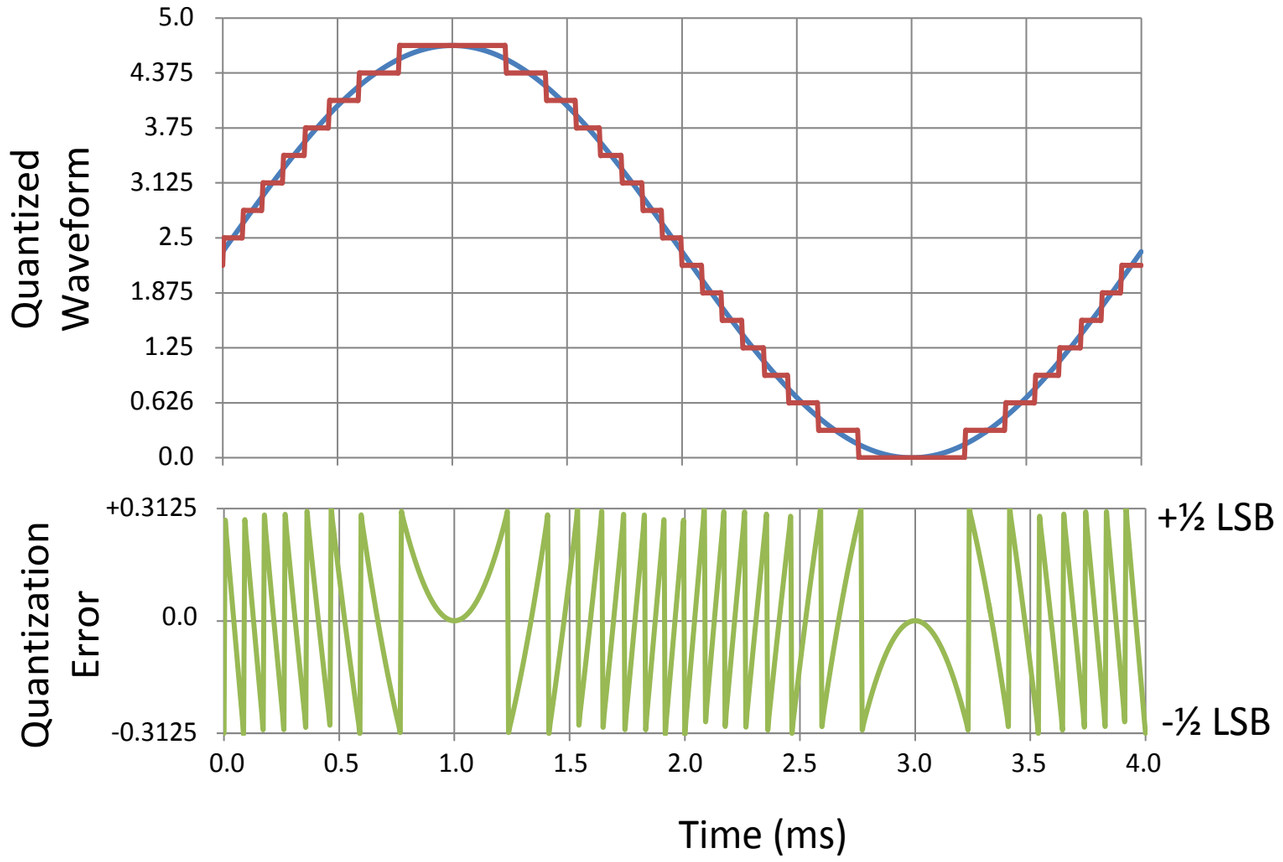

Signal to Noise Ratio (SNR)

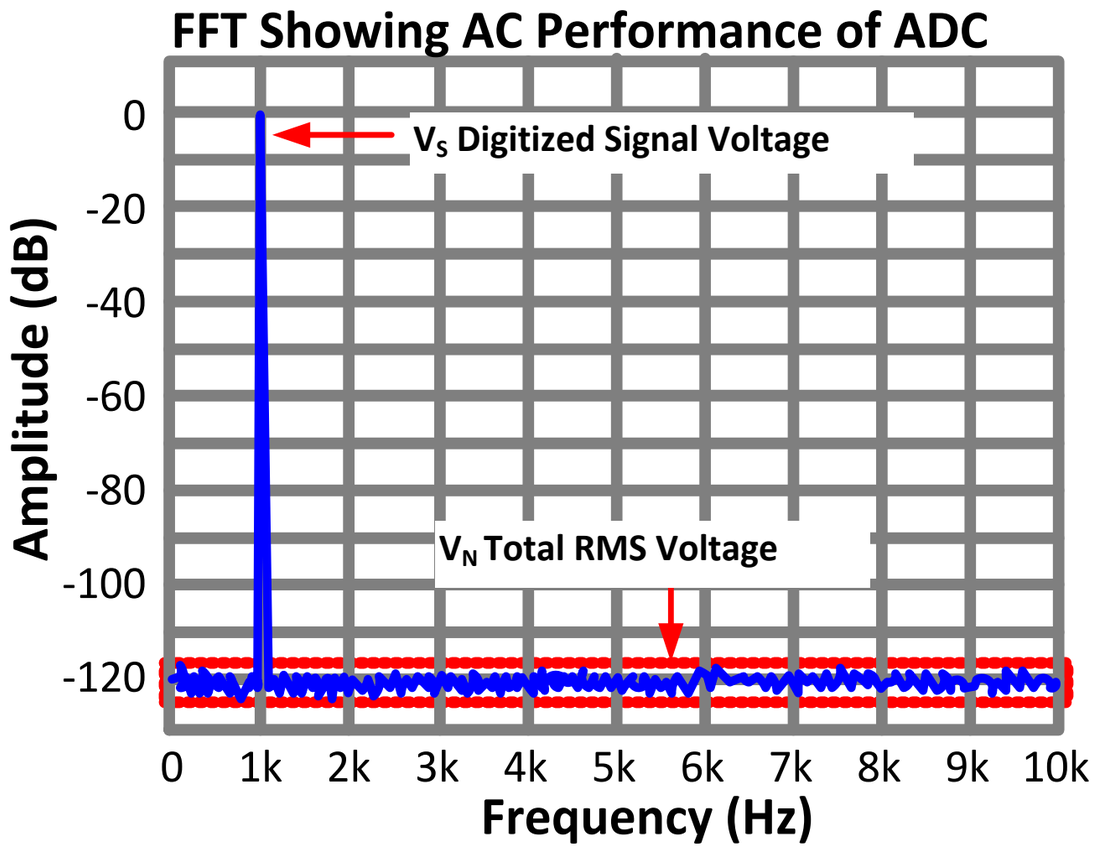

Measured Ratio:

$$SNR(V/V) = \frac{V_S}{V_N}$$

Measured dB:

$$SNR(dB) = 20 \cdot log\left(\frac{V_S}{V_N}\right)$$

Ideal ADC SNR:

$$SNR(dB) = 6.02 \cdot N + 1.76$$

Where N is the number of bits
e.g. N = 10 for a 10 bit converter

Ideal SNR calculation from Resolution

According to the previous equation:

$$SNR = 6.02N + 1.76\ dB$$

ADC Resolution N (bits)	Levels (2^N)	SNR (dB)
8	256	**49.92**
10	1024	**61.96**
12	4096	**74.00**
14	16384	**86.04**
16	65536	**98.08**
18	262144	**110.12**
20	1048576	**122.16**

Nonlinearity

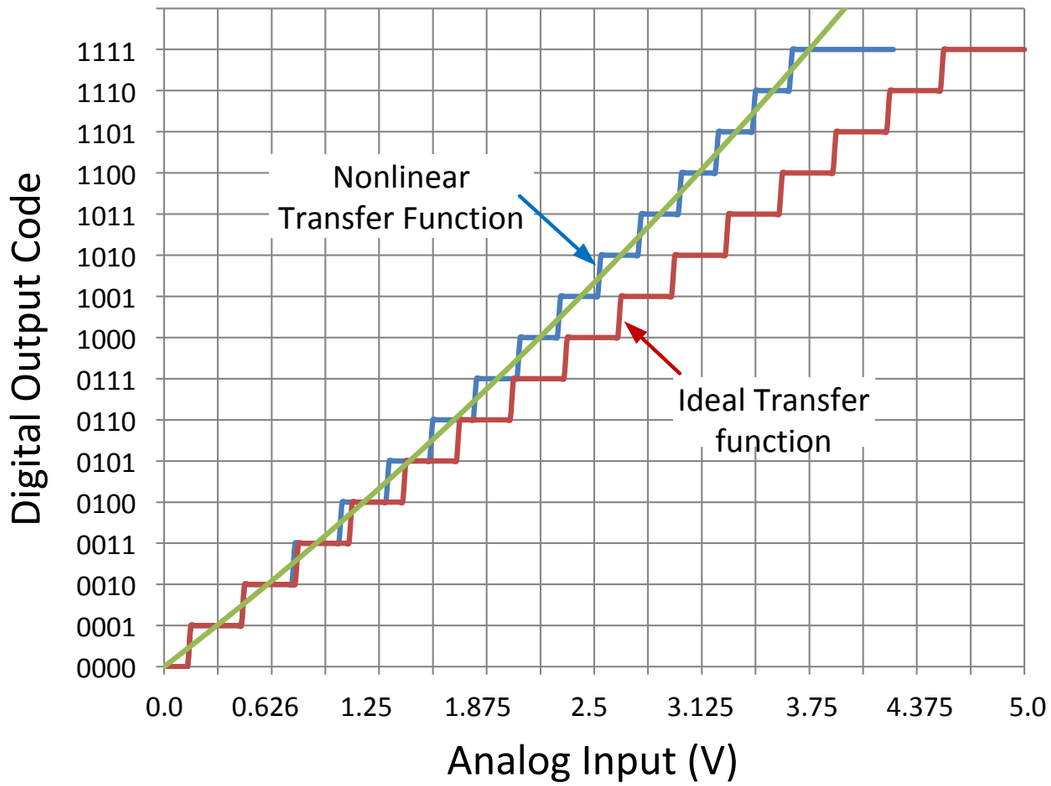

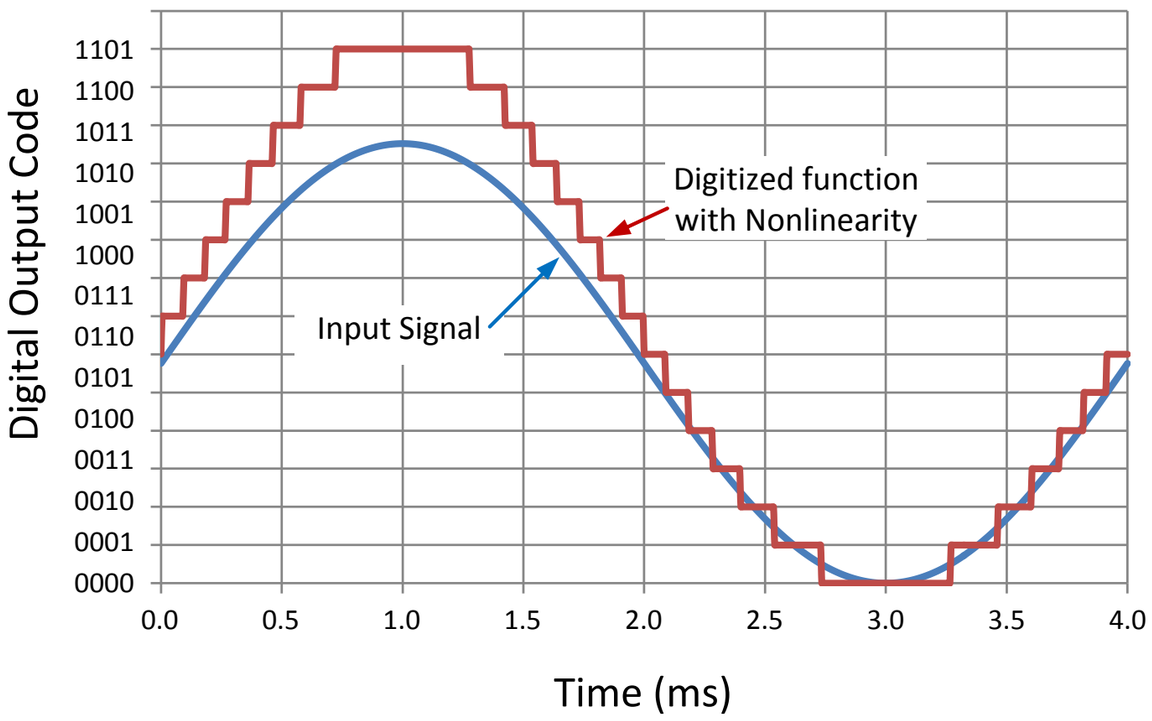

Total Harmonic Distortion (THD), SINAD

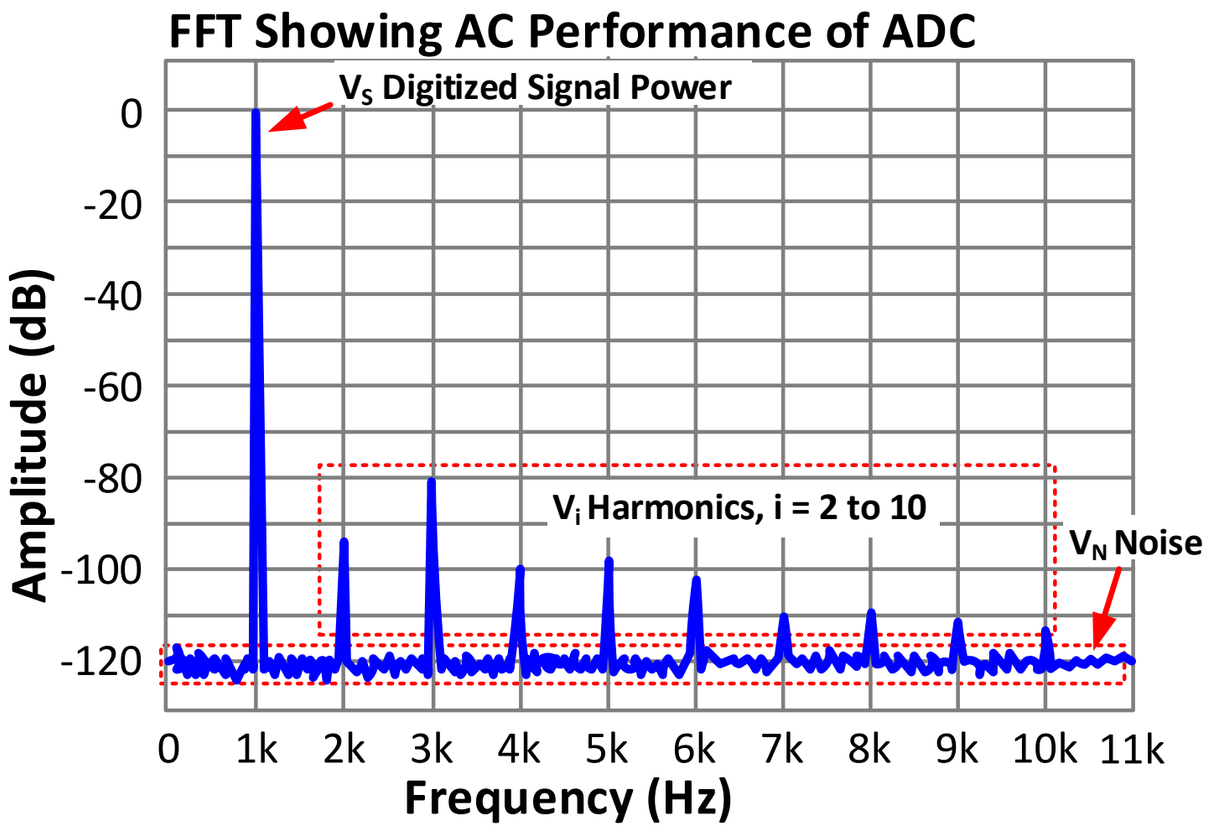

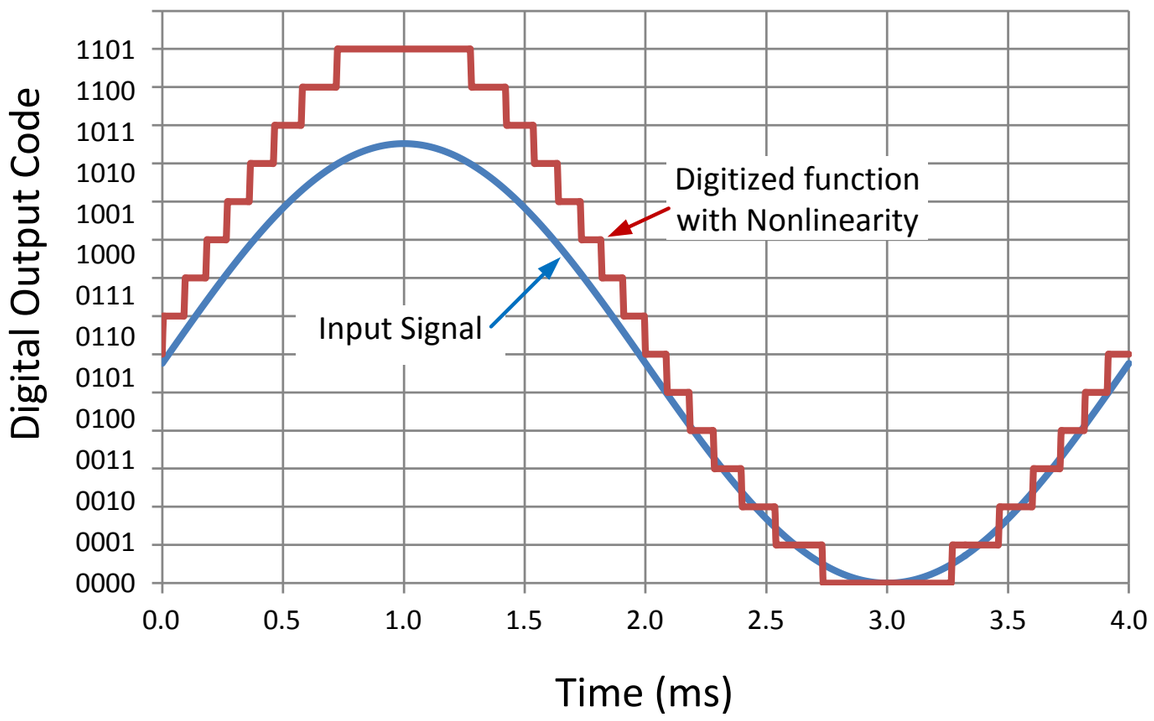

Total Harmonic Distortion (THD), THD+N

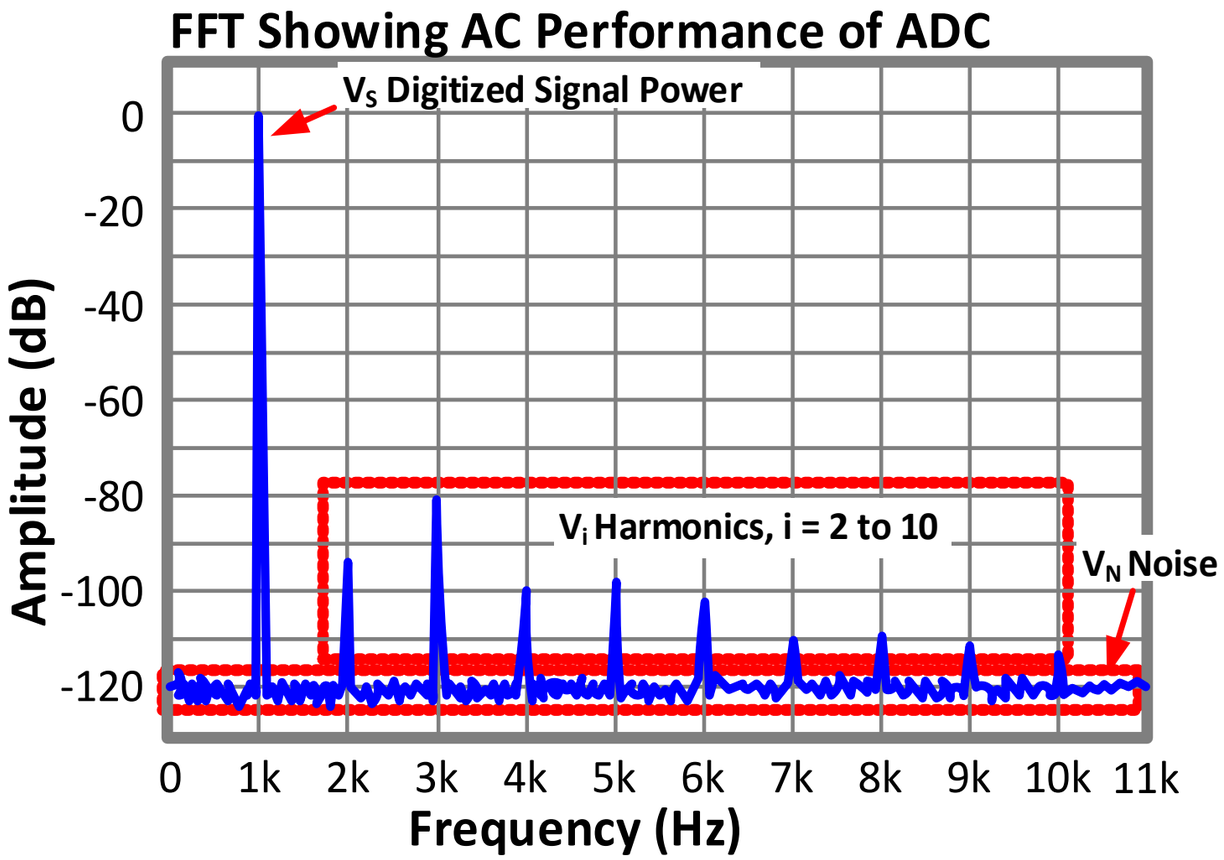

$$THD(\%) = \sqrt{\frac{\sum_{i=2}^{10} V_i^{\,2}}{V_S^{\,2}}} \cdot 100$$

$$THD(dB) = 20 \cdot log\left(\sqrt{\frac{\sum_{i=2}^{10} V_i^{\,2}}{V_S^{\,2}}}\right)$$

$$(THD + N)(dB) = 20 \cdot log\left(\sqrt{\frac{\sum_{i=2}^{10} V_i^{\,2} + V_N^{\,2}}{V_S^{\,2}}}\right)$$

$$SINAD(dB) = 20 \cdot log\left(\sqrt{\frac{V_S^{\,2}}{\sum_{i=2}^{10} V_i^{\,2} + V_N^{\,2}}}\right)$$

Total Harmonic Distortion (THD), THD+N

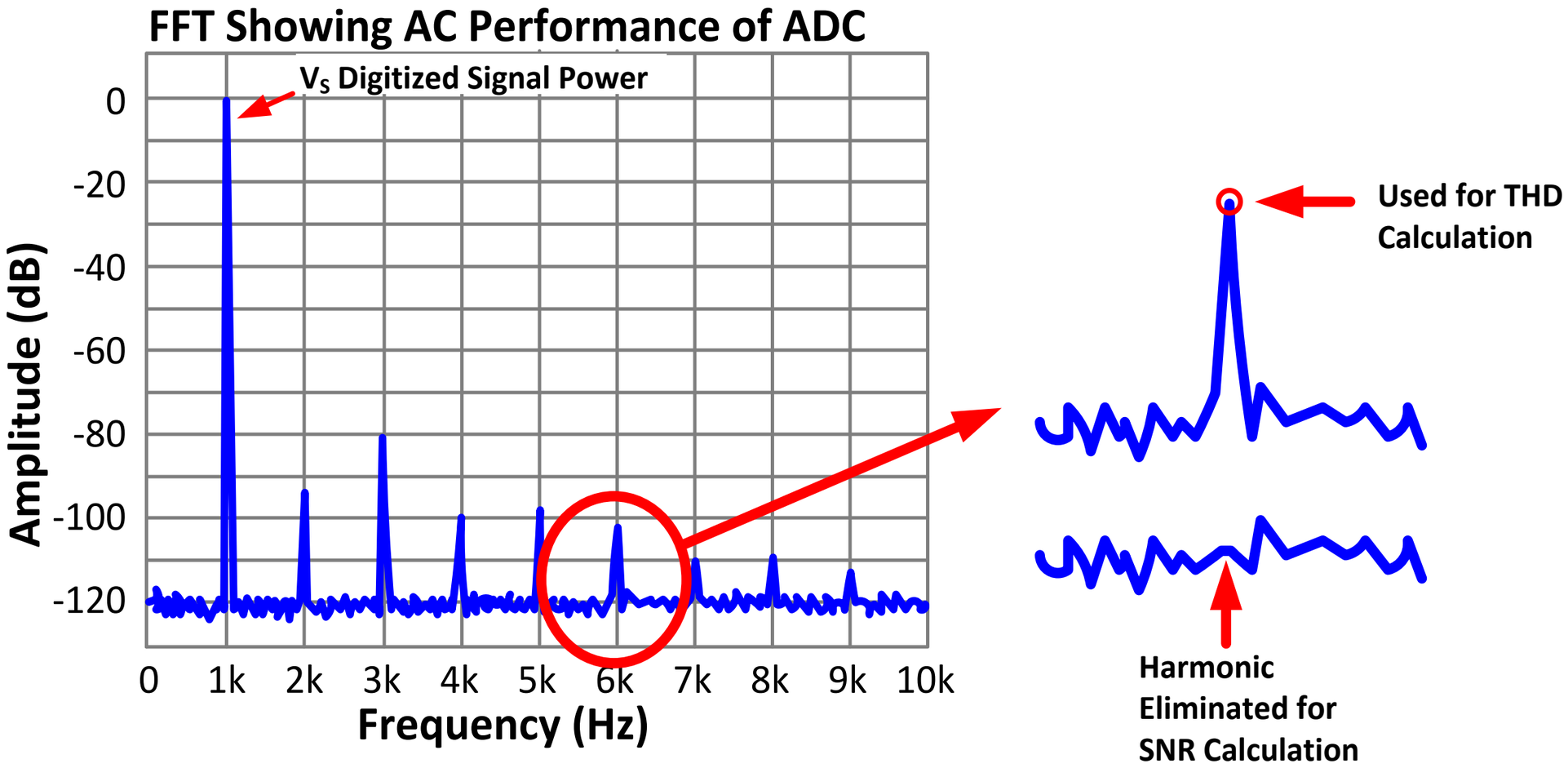

Agenda

1. **ADC Input types**
   a) Single ended, pseudo-differential, fully-differential, and true-differential
   b) Switched capacitor vs. buffered
2. **Linear operation of amplifier and ADC**
   a) Rail-to-Rail amplifiers and crossover distortion
   b) Inverting configuration
3. **Common Front Ends**
   a) Instrumentation amplifier: Selecting gain and common mode range
   b) Fully Differential Amplifiers: Single Ended to Differential
4. **Error Sources:**
   a) Offset and Gain Error
   b) Calibration
   c) Drift and Non-linearity
   d) Noise
5. **AC Specifications**
6. **Aliasing**

Aliasing: Time Domain vs. Frequency Domain

Time Domain

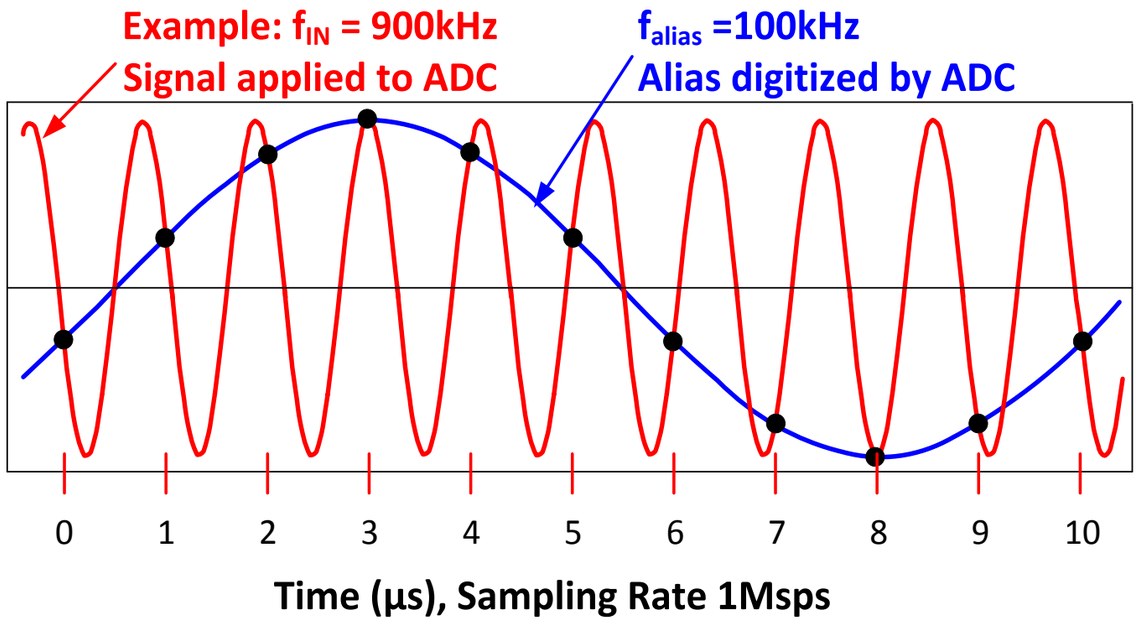

Frequency Domain

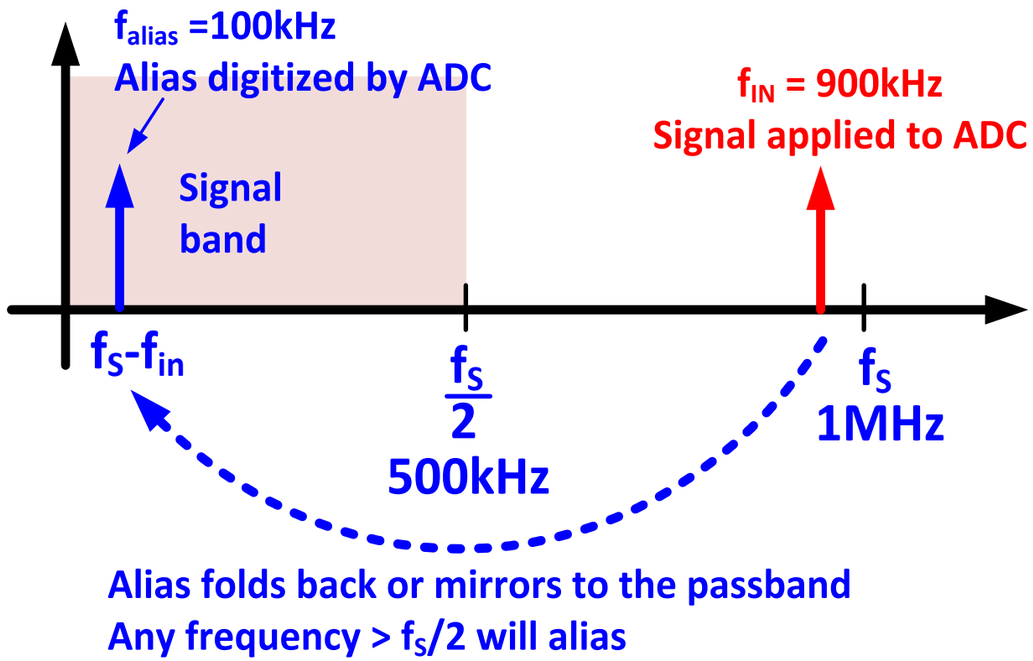

Nyquist frequency = fs/2, the maximum input signal without aliasing.

Anti-aliasing filter (f_s = 1Msps)

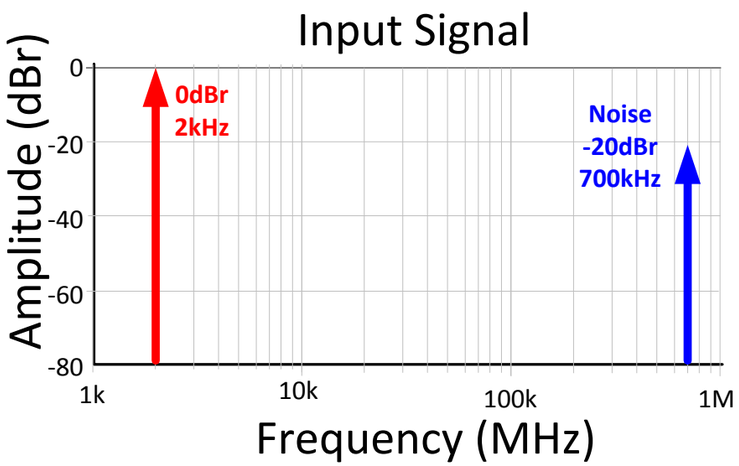

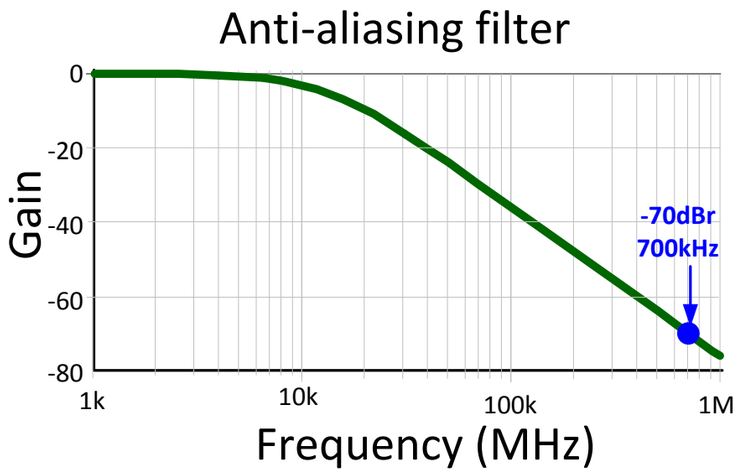

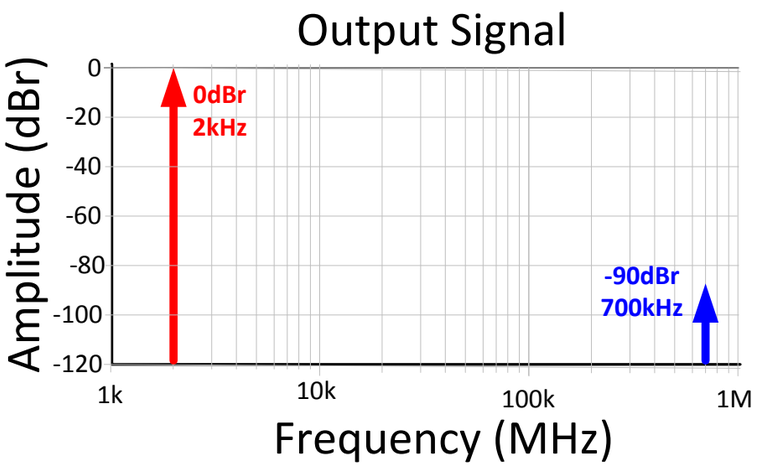

Sampling frequency = fs = 1Msps

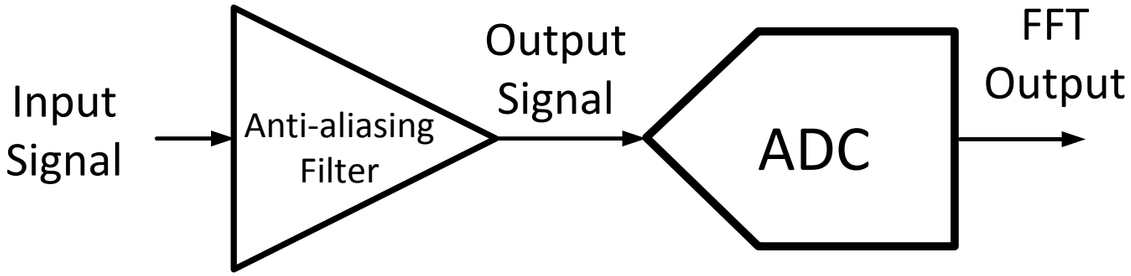

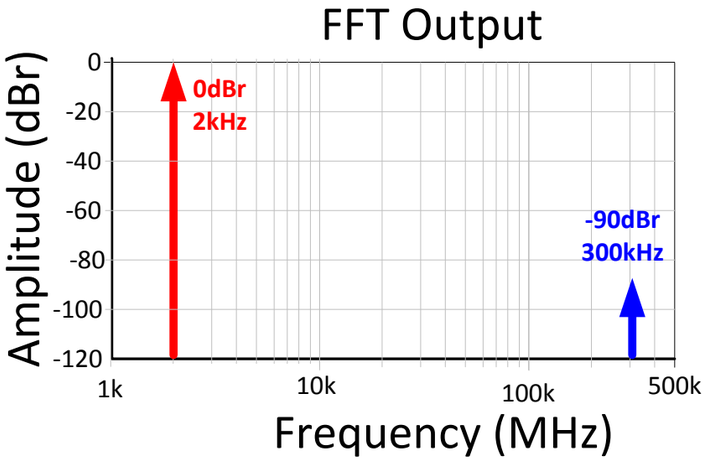

SAR Anti-aliasing Filter Design

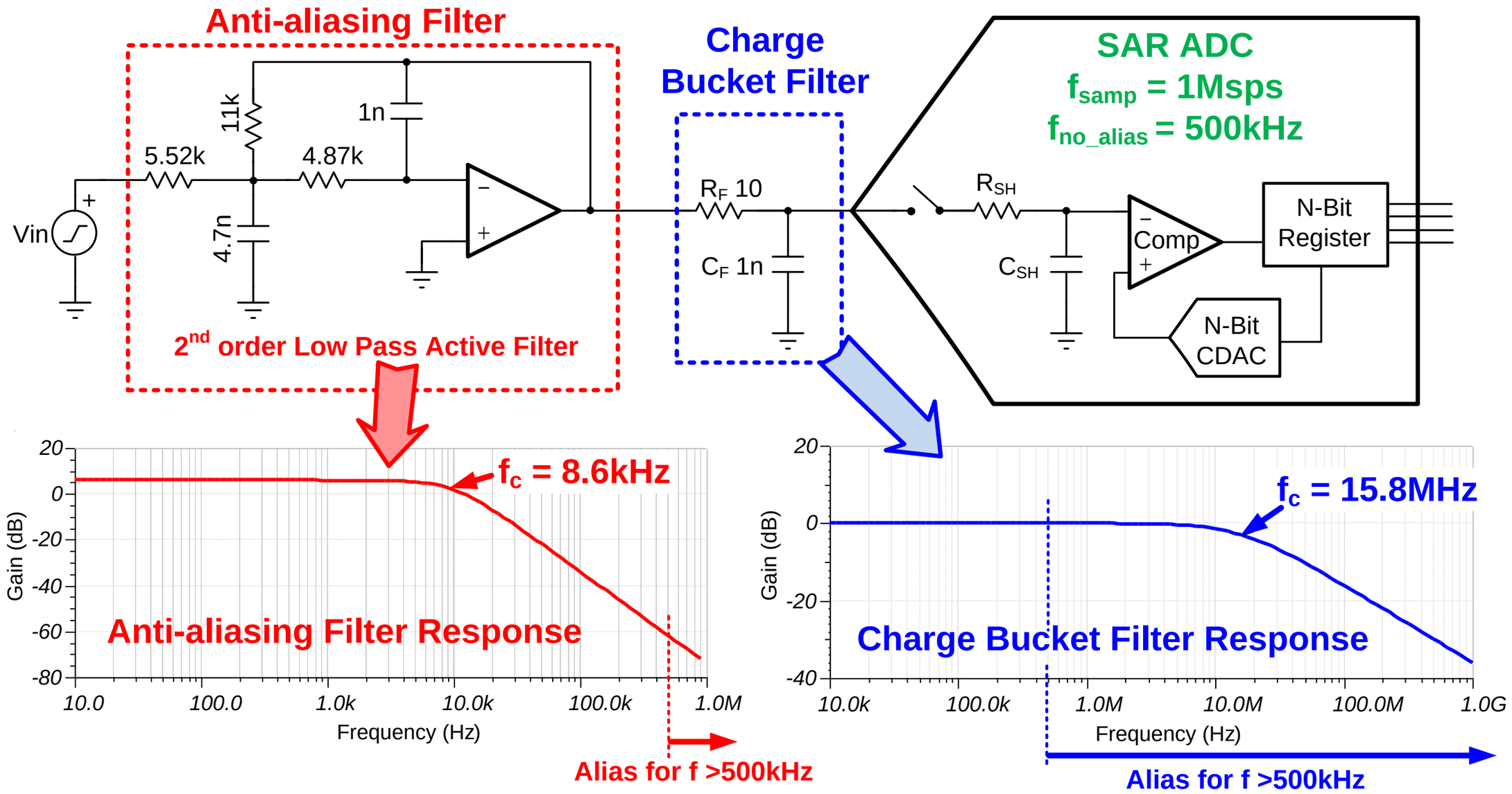

What's the "Charge Bucket" for?

Capacitor Charging Kickback

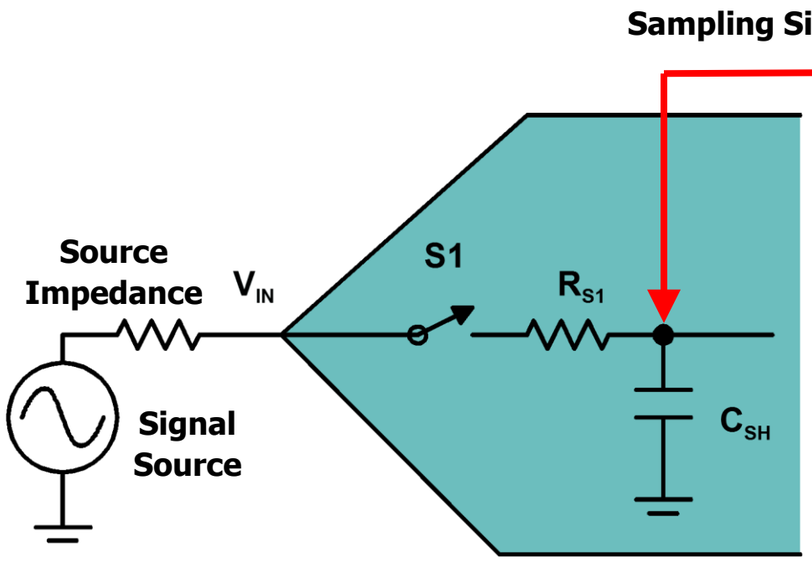

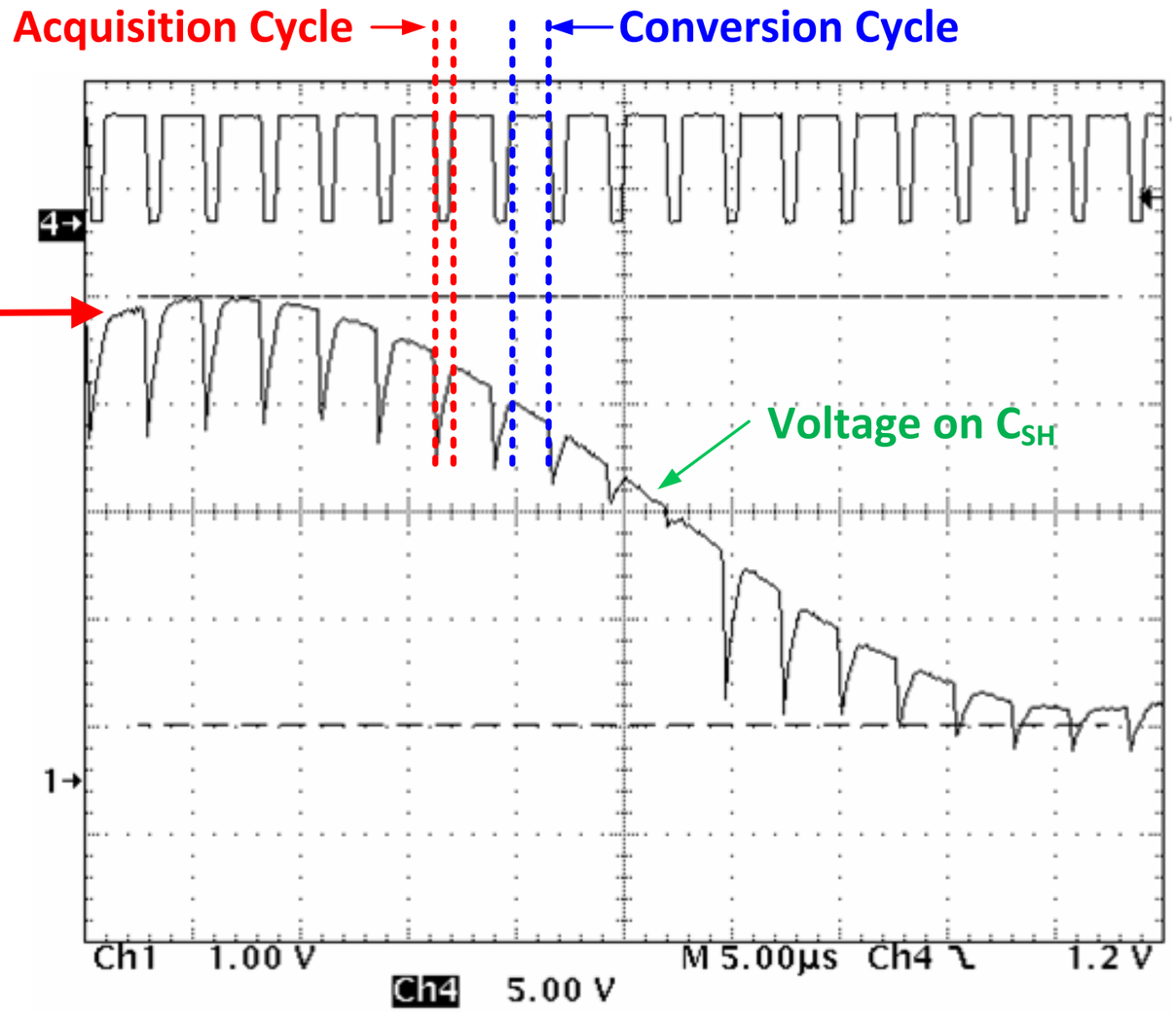

Thanks for your time!

TI Precision Labs Now including ADCs, MUXs, and Comparators!!!

ti.com/PrecisionLabsADCs

- **Created for both new and experienced engineers**
- **80+ Lectures with quizzes & Labs with experiments**
- **< 15 minutes per video, 16 hrs of total content**

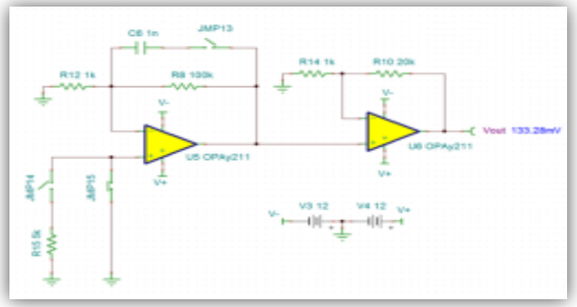

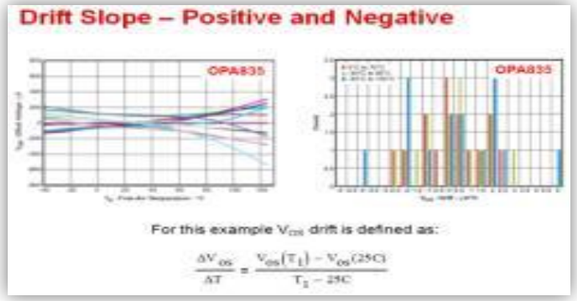

Op Amps

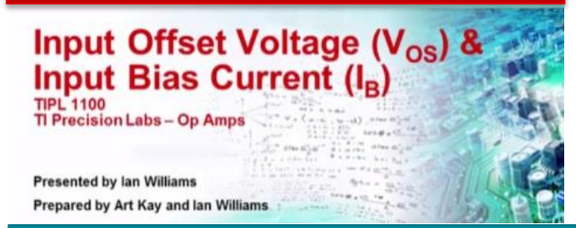

Comparators

MUXes

ADCs

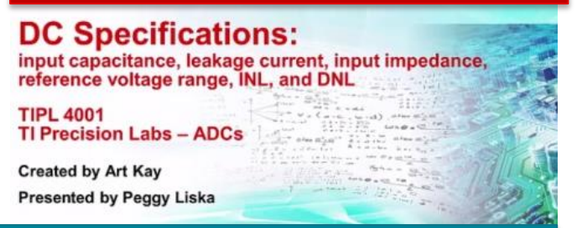

More than 80+ videos!!!

Analog Engineer’s Calculator Free Tool

http://www.ti.com/tool/analog-engineer-calc

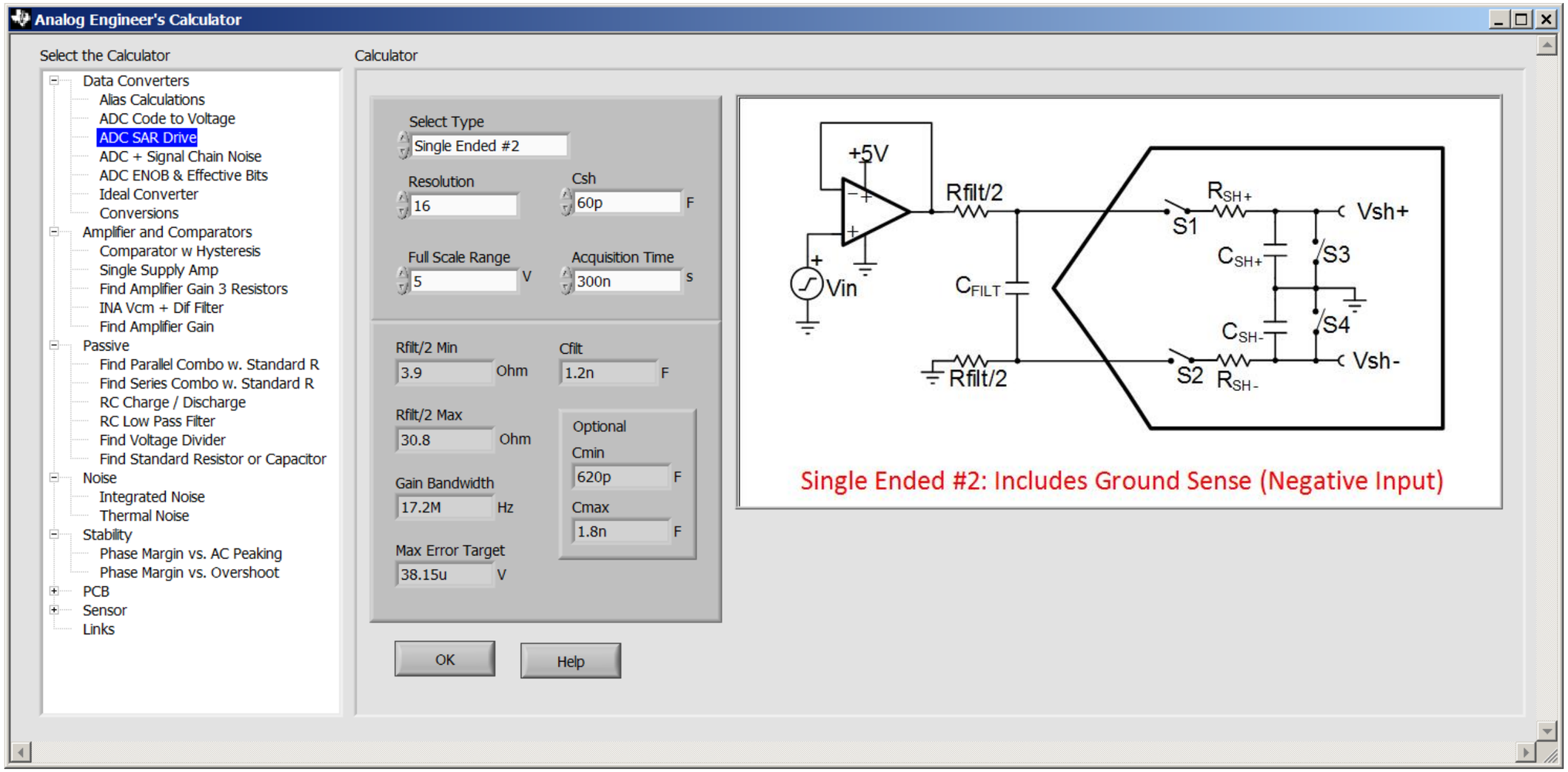

Analog Engineer’s Pocket Reference

Analog Engineer’s Pocket Reference

A “must-have” for every Board/System Design Engineer

Download: http://www.ti.com/lsds/ti/amplifiers-linear/precision-amplifier-support-community.page#pocketref

Buy Hardcopy: https://store.ti.com/Search.aspx?k=pocket+reference&pt=-1

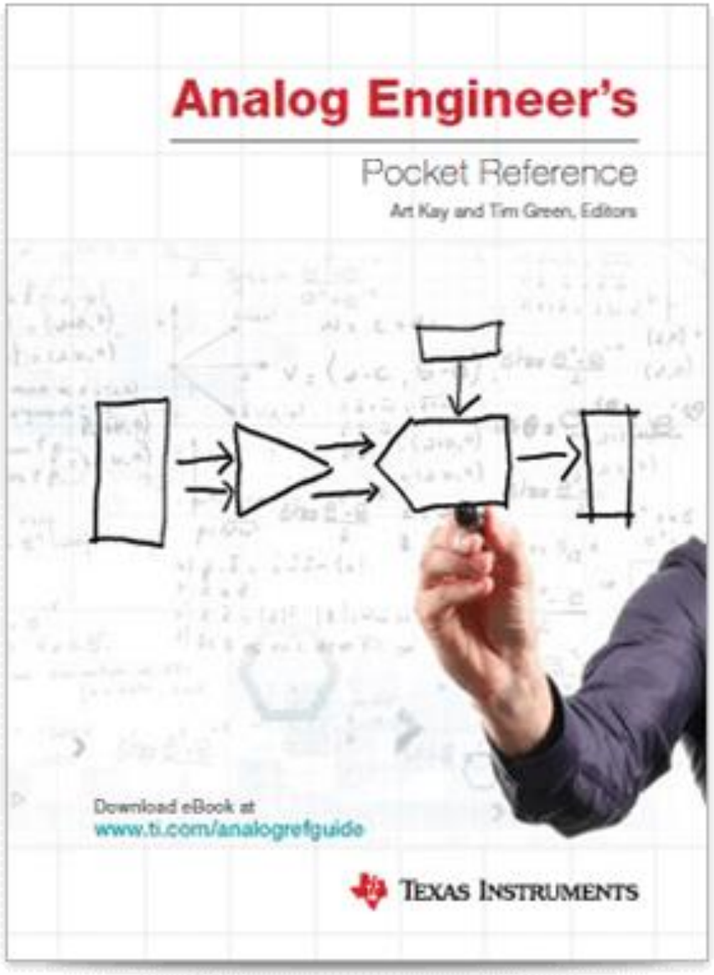
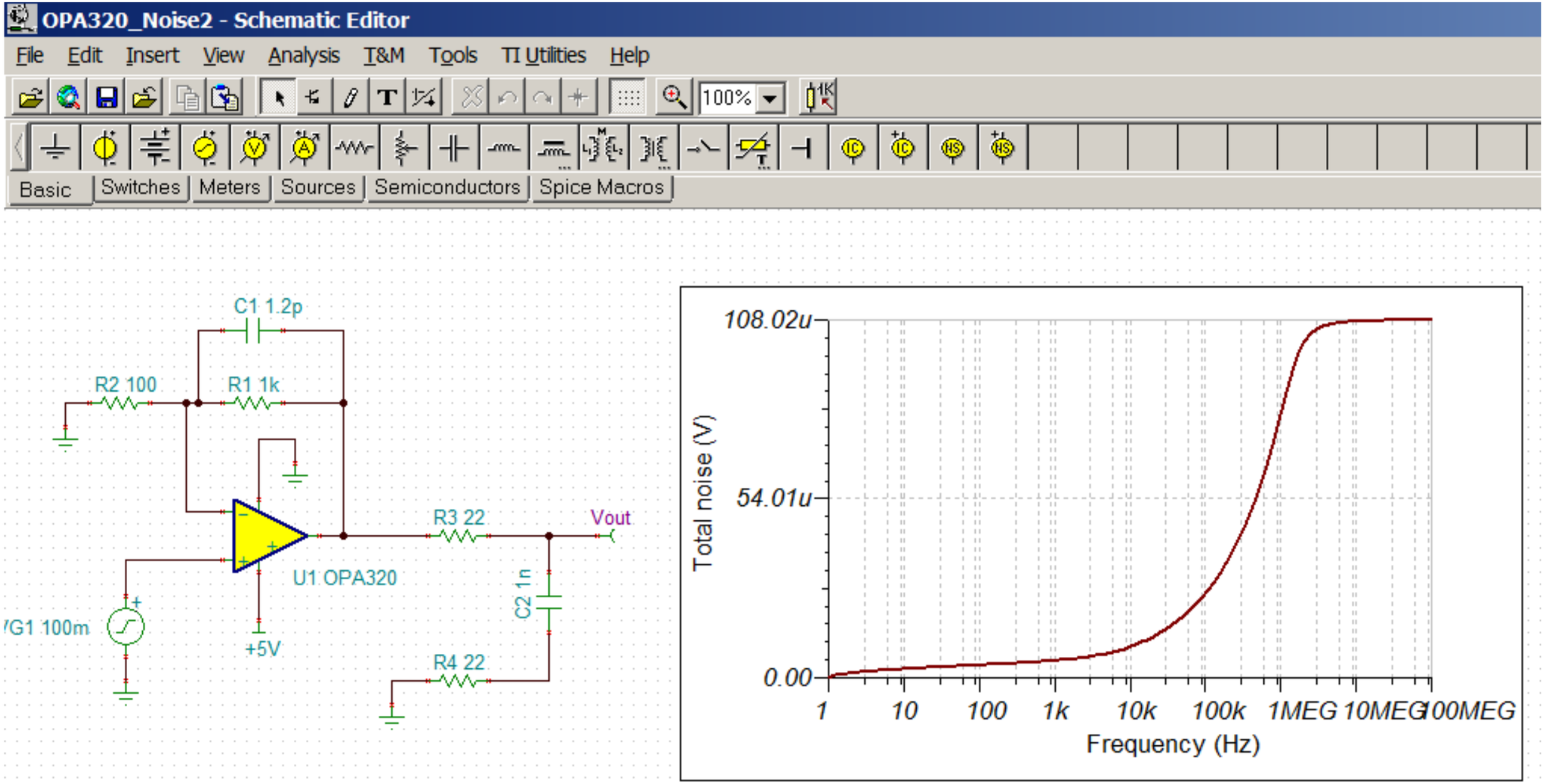
TINA-TI™ Free SPICE Software
http://www.ti.com/tool/tina-ti