TECH DAYS
Texas Instruments

Latest Current Sense Technologies-System-Level Benefits over Discrete Designs Historically Used

Matthew Nakanishi

Detailed Agenda

- The Basics of Current Measurement
- A Comparison of Current Measurement Methods
- Deep Dive into Overcurrent Protection
- Deep Dive into Current and Power Monitoring for System Optimization
- Deep Dive into Current Measurements for Closed Loop Circuits

Current Sense Amplifiers

The Basics of Current Measurement

The physics behind current sensing – two ways to measure currents

Ohm's Law (Shunt)

A current sense device directly measures the current through a relatively small ohmic valued (shunt) resistor.

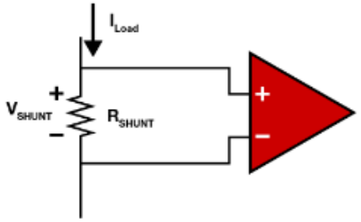

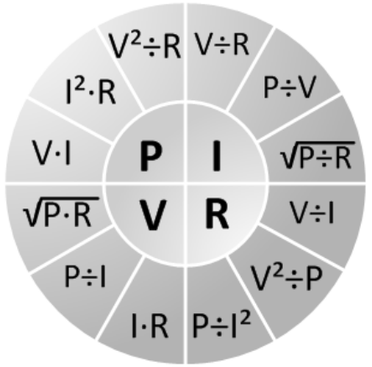

Attributes to consider:

- Common Mode Voltage Range & Isolation
- Accuracy & Calibration Needs
- Power Consumption & Dissipation
- Functionality & Space Constraints

Ampere & Faraday's Laws

(Magnetic)

A current sensing device indirectly measures the current induced by a magnetic field. Due to the non-invasive measurement technique, this method offers high levels of inherent isolation.

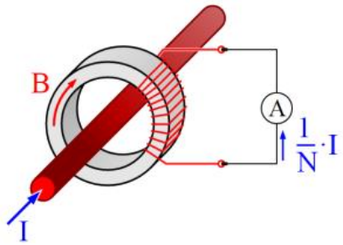

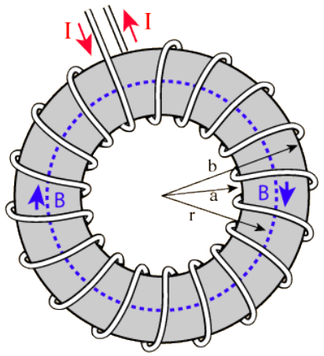

Attributes to consider:

- Isolation
- Dynamic Range
- Accuracy, Linearity and Sensitivity
- Integration & Size

Terms: Common-Mode Voltage and Directionality

TECH DAYS
Texas Instruments

Common Mode Voltage

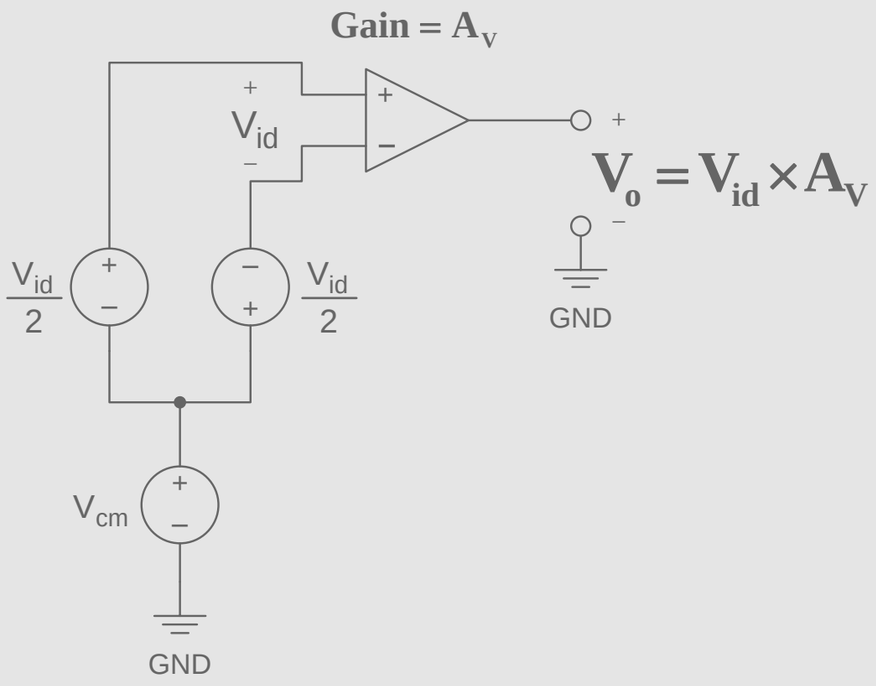

Directionality:

Application may require sensing current in both directions

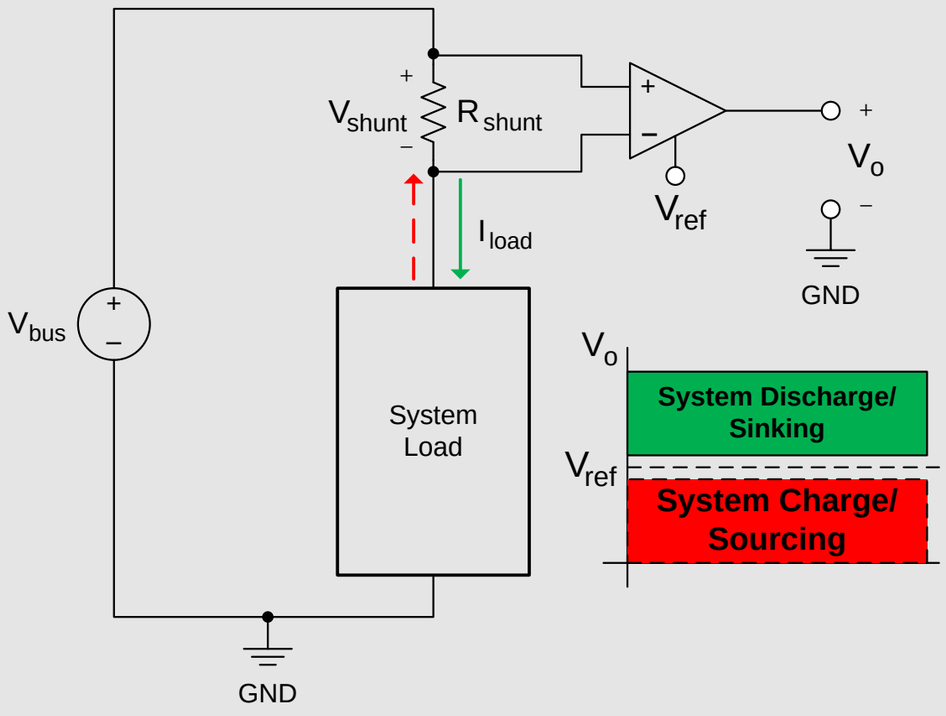

Terms: Low-Side vs. High-Side Sensing

TECH DAYS
Texas Instruments

Low Side Sensing

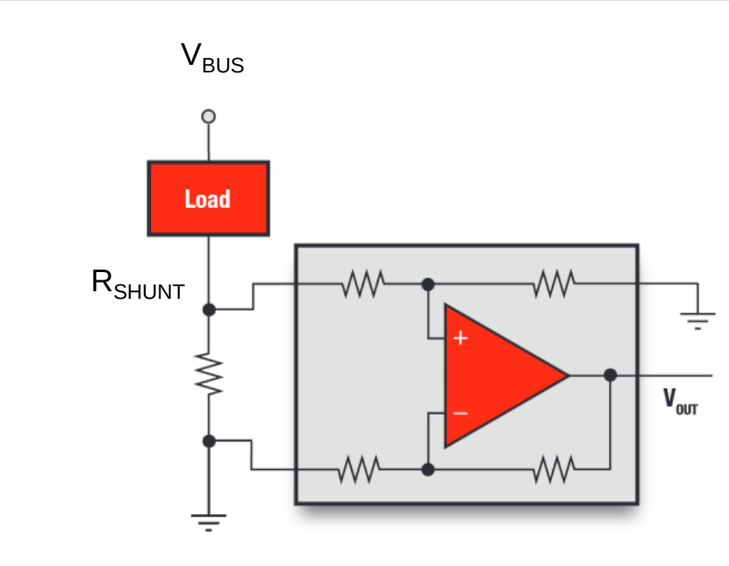

Shunt resistor placed between the system load and ground

+

- $V_{CM} \approx 0V$
- Straightforward
- Inexpensive (may use an op amp)

-

- Can't detect load shorts to ground
- System GND is now $I_{LOAD} \times R_{SHUNT}$

High Side Sensing

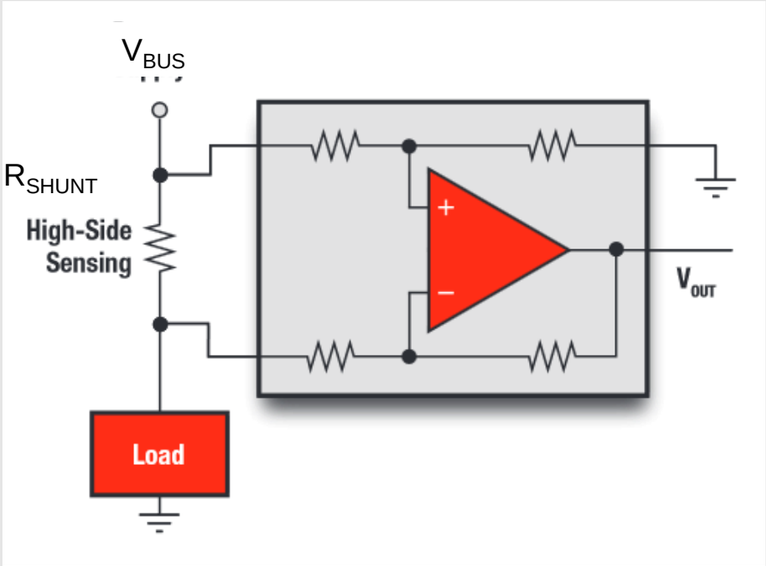

Shunt resistor placed between supply (V_{BUS}) and system load

+

- Monitors current directly from source
- Load opens and shorts easily detected
- No added impedance between load and ground

-

- $V_{CM} \approx V_{BUS}$
- High Input Common-Mode Compliance Required

Current Sense Amplifiers

Comparison of Current Measurement Methods

Shunt Resistor Pros and Cons

- Shunt resistor only into ADC or comparator

+ Pros
  - Can be inexpensive
  - Easy to understand

- Cons
  - Unity gain is only as accurate as resistor
    - » There is no gain from the resistor, it is a direct measurement
  - Drift is determined by resistor specification
  - Power consumption is directly determined by resistor size
  - Voltage swing is determined by resistor size
  - Only supports common modes up to ADC/comparator input rail spec

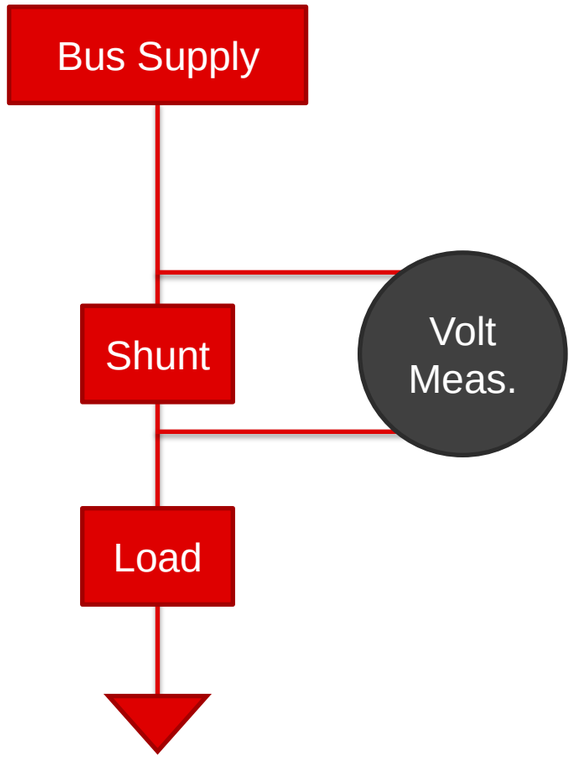

Op-amp Circuit Pros

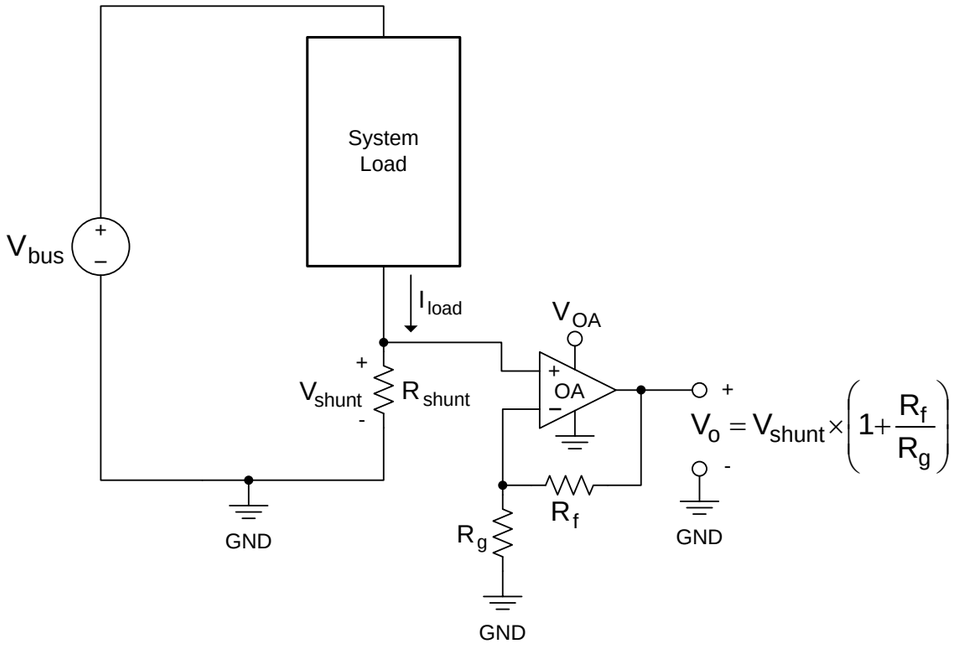

Low side with op amp pros

- Low input bias currents
- Gain, and specifically adjustable gain
- Can be cost effective
- High bandwidth true linear amplifier
- Can high very high bus voltages because low side inputs will never be very far from ground, especially with low resistance and high gain

Op-amp Circuit Cons

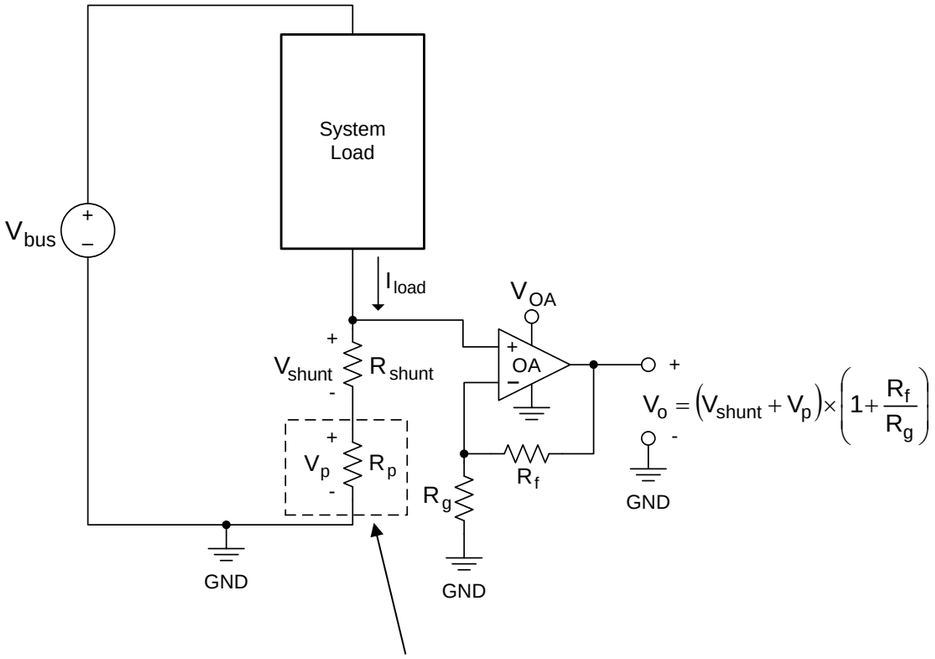

Parasitic impedance to ground introduces error

Cons

- Op amps can only be low side measurement
- Only single ended measurements
- Sensitive to PCB layout parasitics

Terms: Gain and Offset Error

- Gain and offset errors can be calibrated out to some degree with system level calibration
- Raw, uncalibrated accuracy can be low, especially with inexpensive resistors and op amps

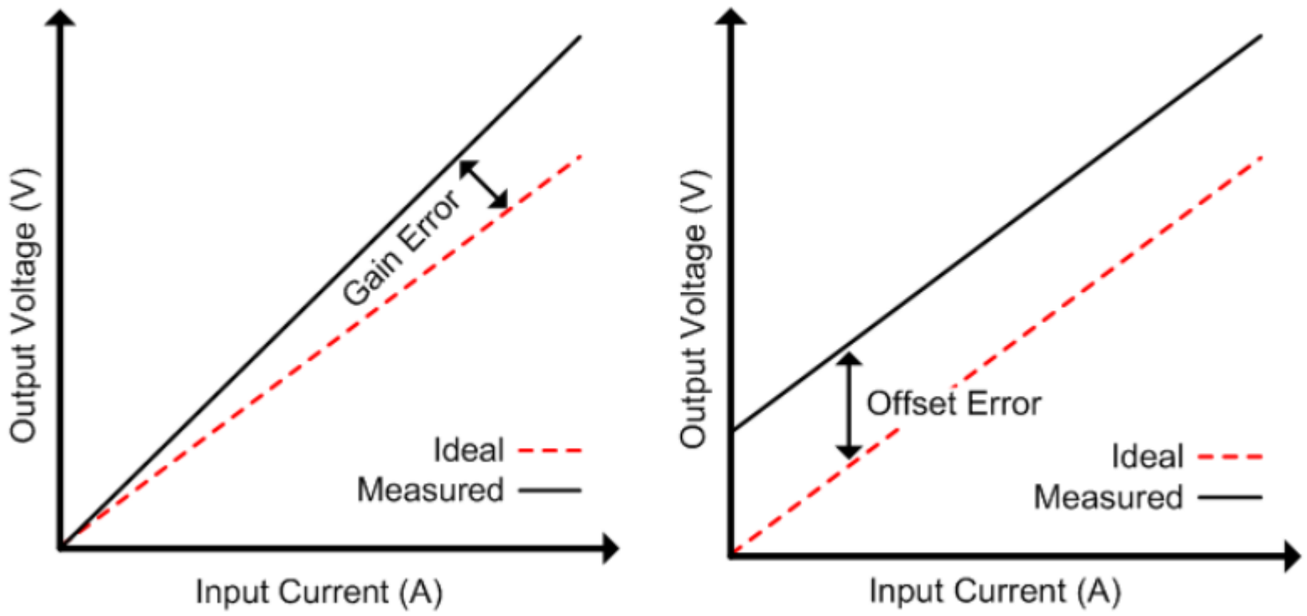

http://www.ti.com/lit/ug/tidu040b/tidu040b.pdf

Terms: Output Swing-to-Rail Specifications

- Output voltage swing with single-supply to ground op amp implementation (if you don't have ideal rail-to-rail amps)
- "Claw" curve shows loading effects

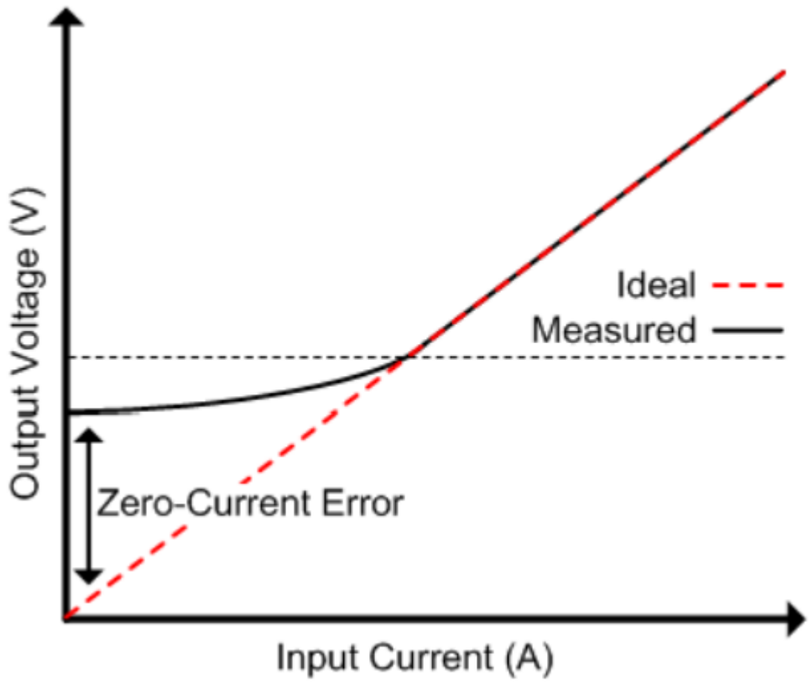

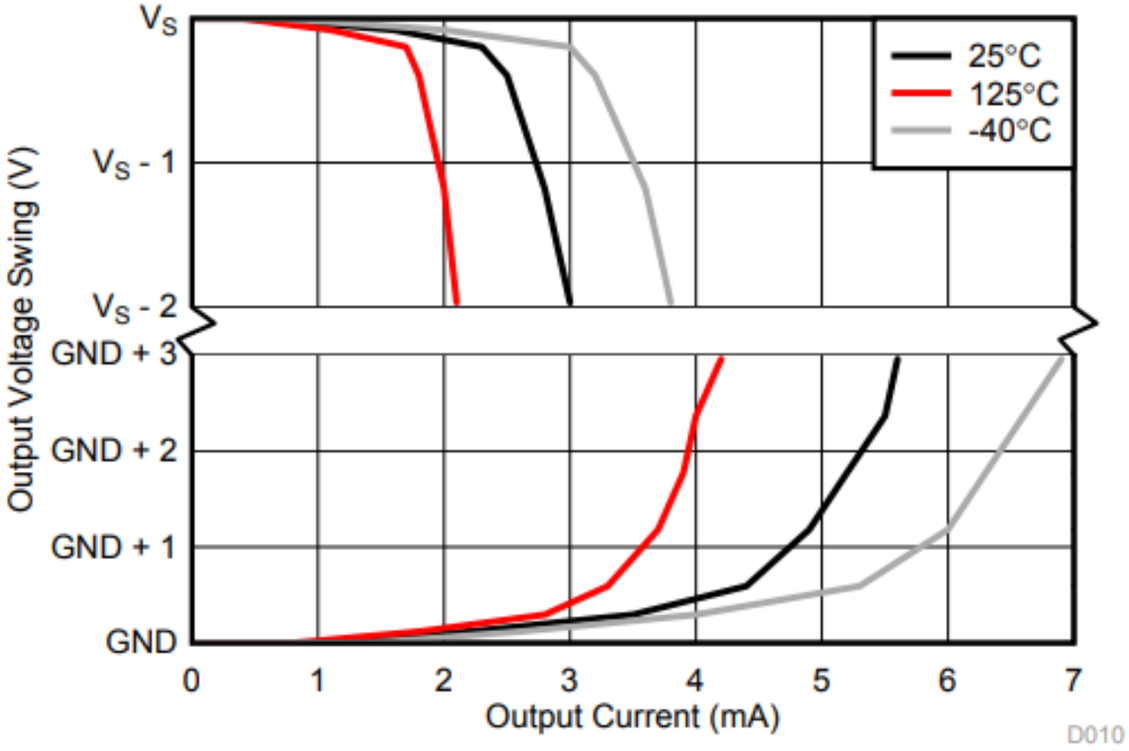

Working with Output Swing-to-Rail Specifications

- Potential Solution: get a negative supply rail for the amp
  - Not always easy to get that in the real world.
- Example: measuring the current from a car battery. Car battery rail is 9V to 16V. Car motherboard is subregulated to 5V, and op amp is powered off the 5V. No negative rail is present natively.
- Can use the LM7705 Low Noise Negative Bias Generator to generate a -0.23V rail from 5V.
  - (from http://www.ti.com/lit/ug/tidu040b/tidu040b.pdf)
  - *At the time of this video recording, there is no automotive grade version of the LM7705 released.*

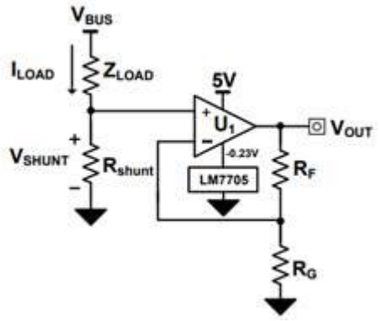

Current Sense Basics: Difference Amplifier (DA)

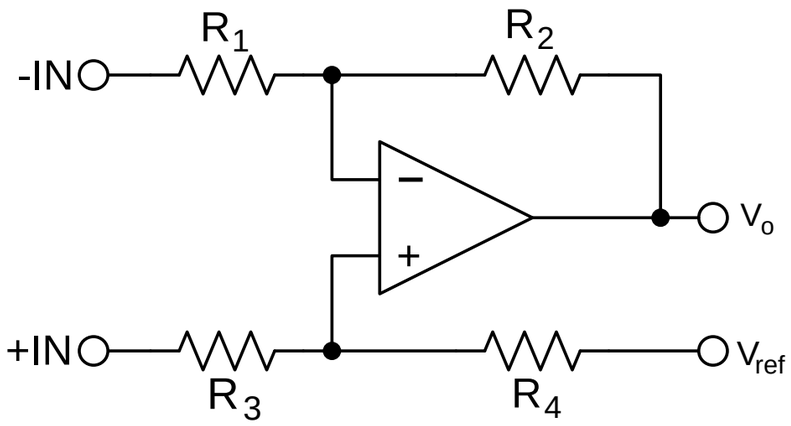

INA149

INPUT			
Impedance	Differential	800	kΩ
	Common-mode	200	kΩ

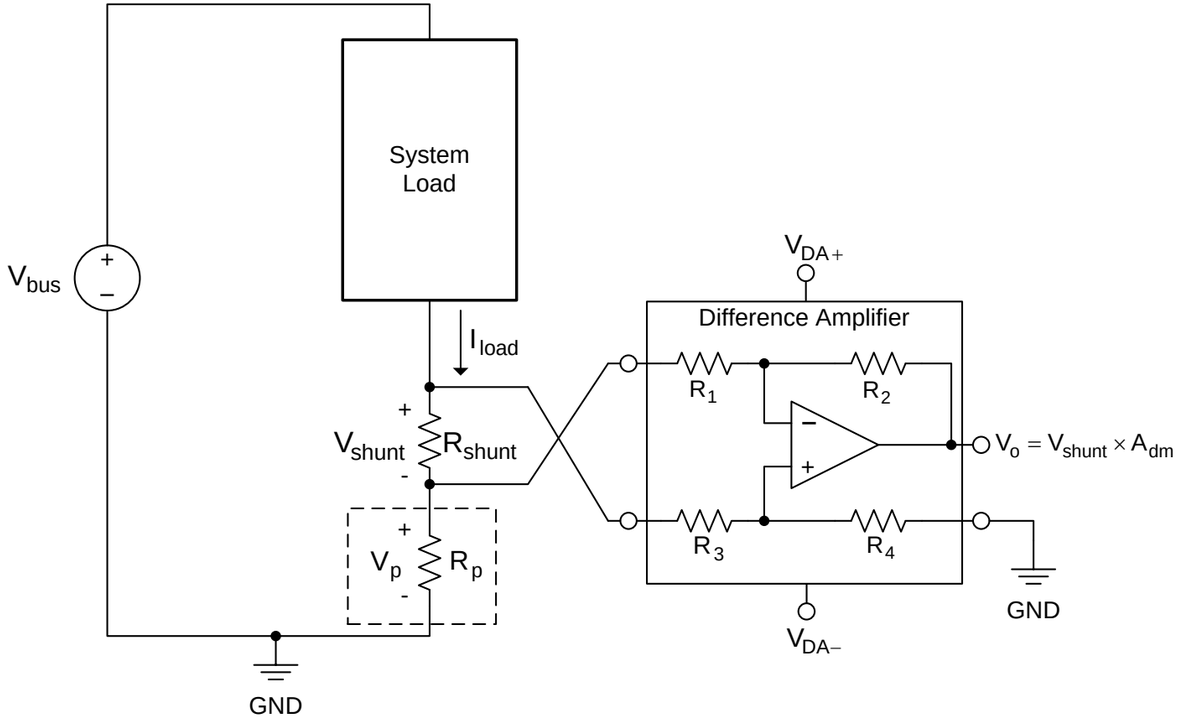

+

- Either **high** or **low-side** current sensing
- Can tolerate very large common-mode voltages (e.g. INA149 V_{CM}=±275V). This is due to large resistive divider on input pins

-

- However the resistive network loads the system
  → Ensure system impedance is significantly smaller than DA input impedances

Current Sense Basics: Instrumentation Amplifier (IA)

- A three op-amp IA is made of a DA with buffered inputs
- Usually used for low-side sensing, but can be used for high-side depending on common-mode voltage

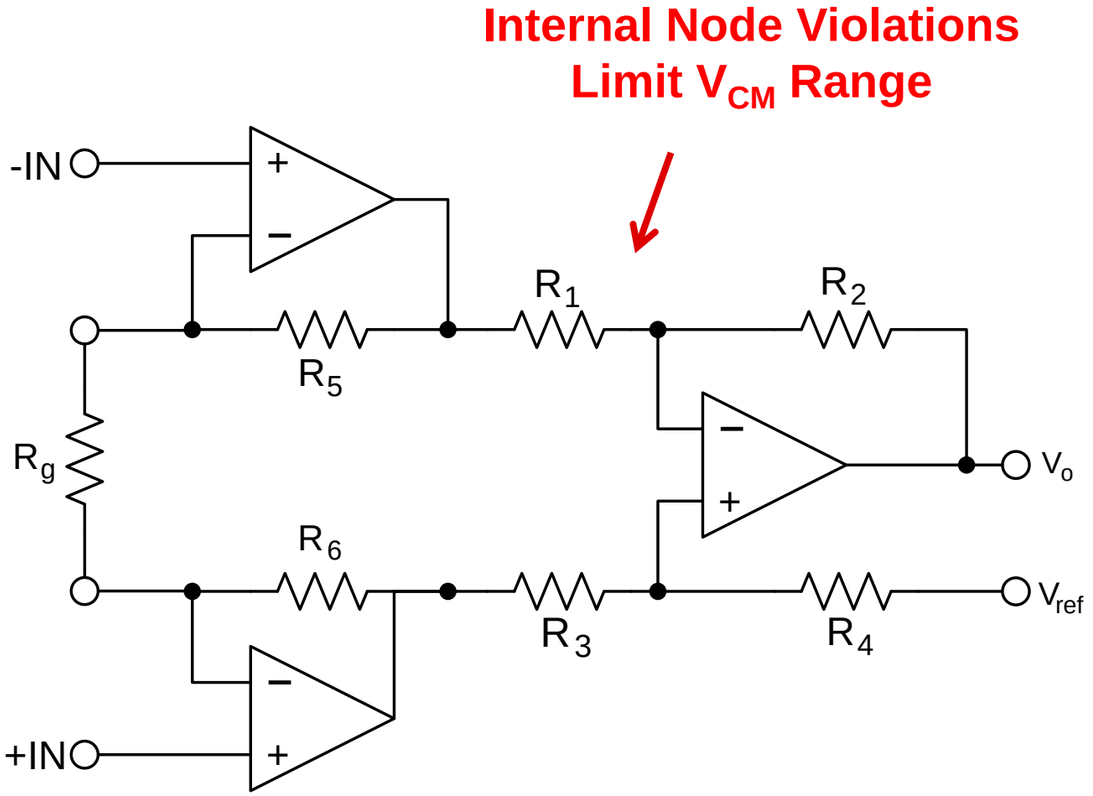

+
- Large input impedance
- Change gain with external resistor

-
- Common-mode voltage must remain within supply voltage

Current Sense Basics: Current Shunt Monitors (CSM)

TECH DAYS
Texas Instruments

Op Amp Input Stage

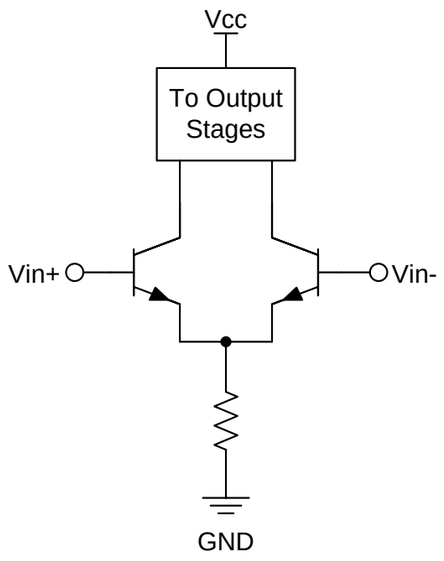

Example CSM Input Stages

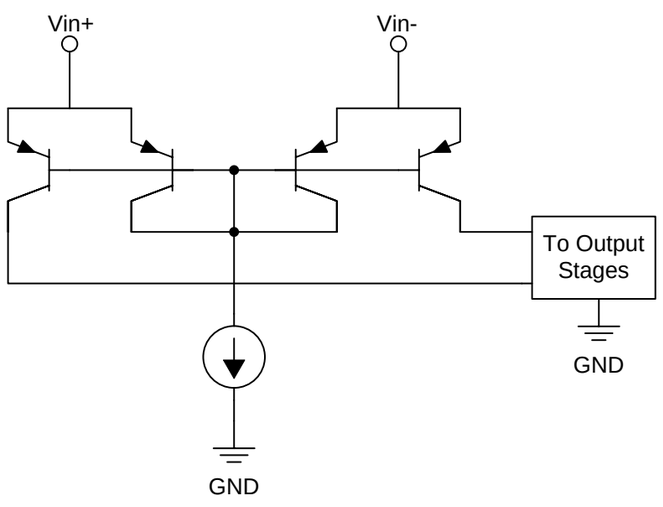

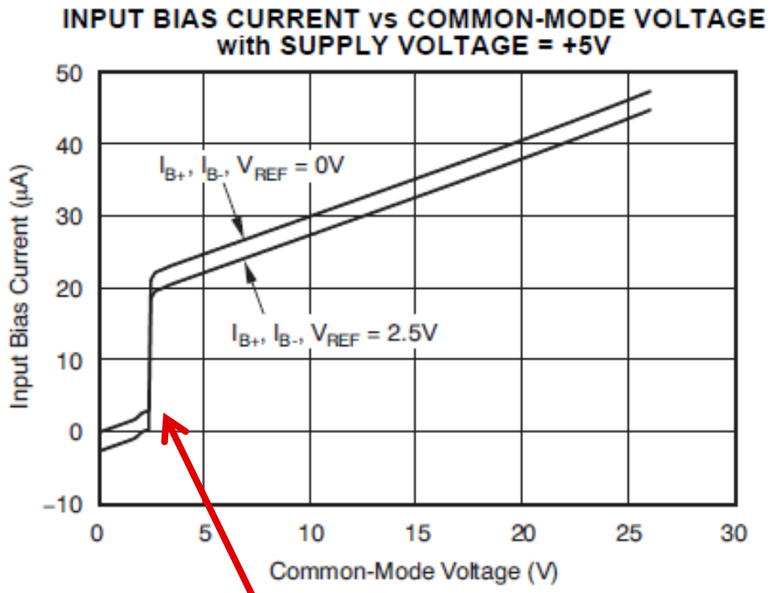

Internal Voltage Comparison

+

- Either **high** or **low-side** current sensing
- Unique input stage topologies (e.g. common-base)
- This allows for V_{CM} values outside of supply voltages AND very large input impedances

–

- Limited to maximum V_{CM} value at currently 80-100V

Understanding the Input Bias Network

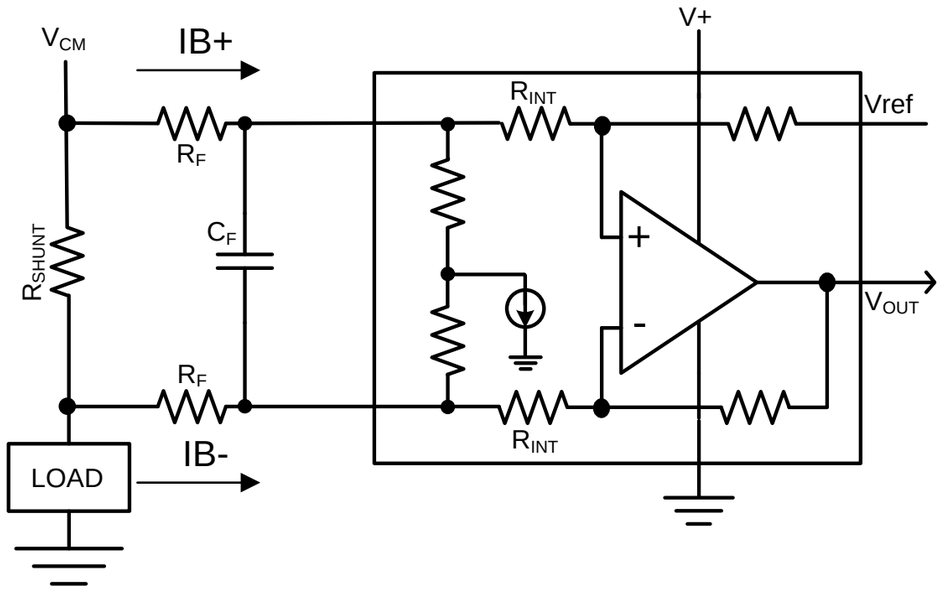

Input bias currents in current sense amplifiers are typically higher than those for op amps and instrumentation amps because the front end of a current sense amplifier is powered through the inputs when the inputs are above the supply. This allows the bus voltage to exceed, often significantly, the supply or ground rails while still operating in a linear range of the amplifier.

Input bias network results in skewed bias currents as differential signal increases.

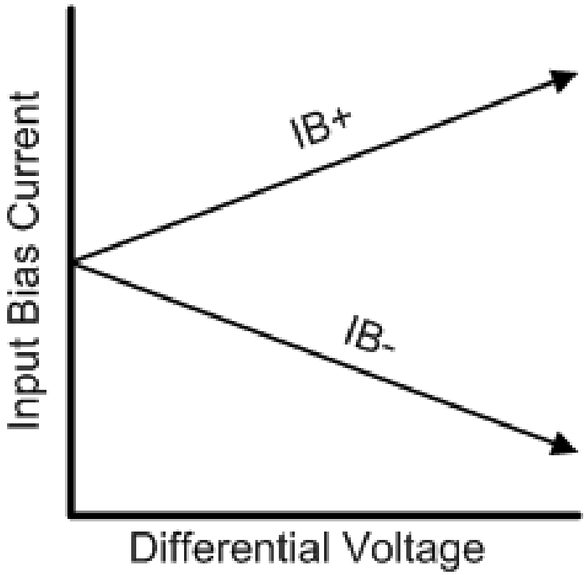

Op Amp vs. Current Shunt Monitor (CSM)

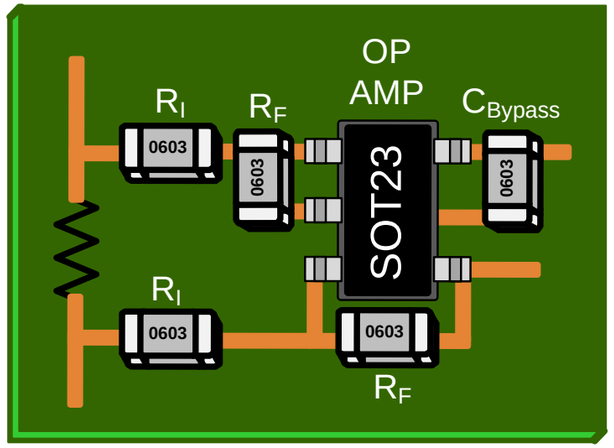

Vs.

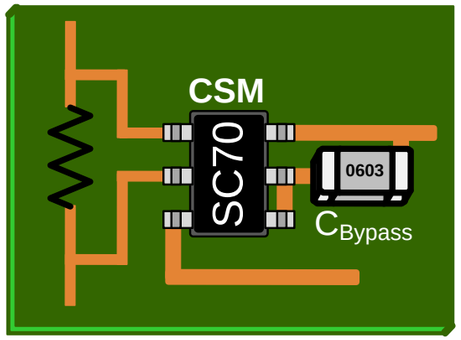

- Current Sense Amplifier Solution 66% Smaller
- Higher CMRR
  - Op Amp with 1% / 0.1% Resistors = ~ 34dB / ~64dB
  - Current Sense Amplifier = ~ 100dB+
- Lower Gain Error
  - Op Amp: 2% without using very expensive, matched resistors
  - Current Sense Amplifier: Less than 0.5%
- CSM offers very low drift: < 1µV/°C VOS & 10ppm/°C Gain Drift

Current Shunt Sensing: What Is Driving Accuracy?

TECH DAYS
Texas Instruments

Accuracy

- Worst Case Accuracy

$$\varsigma_{worst-case}(\%) = \sum_{1}^{n} e_n$$

- Probable Accuracy (Root–sum–square)

$$\varsigma_{RSS}(\%) = \sqrt{\sum_{1}^{n} e_n^{\,2}}$$

Error Sources

Amplifier/Internal

- INPUT OFFSET RELATED
  - Input Offset Voltage (V_{OS})
  - V_{OS} Drift
  - Common Mode Rejection Ratio (CMRR)
  - Power Supply Rejection Ratio (PSRR)
- GAIN RELATED
  - Gain Error
  - Gain Error Drift

External

- Shunt Resistor Tolerance & Drift
- Gain Setting Passives Tolerance, Matching, Drift
- PCB Layout

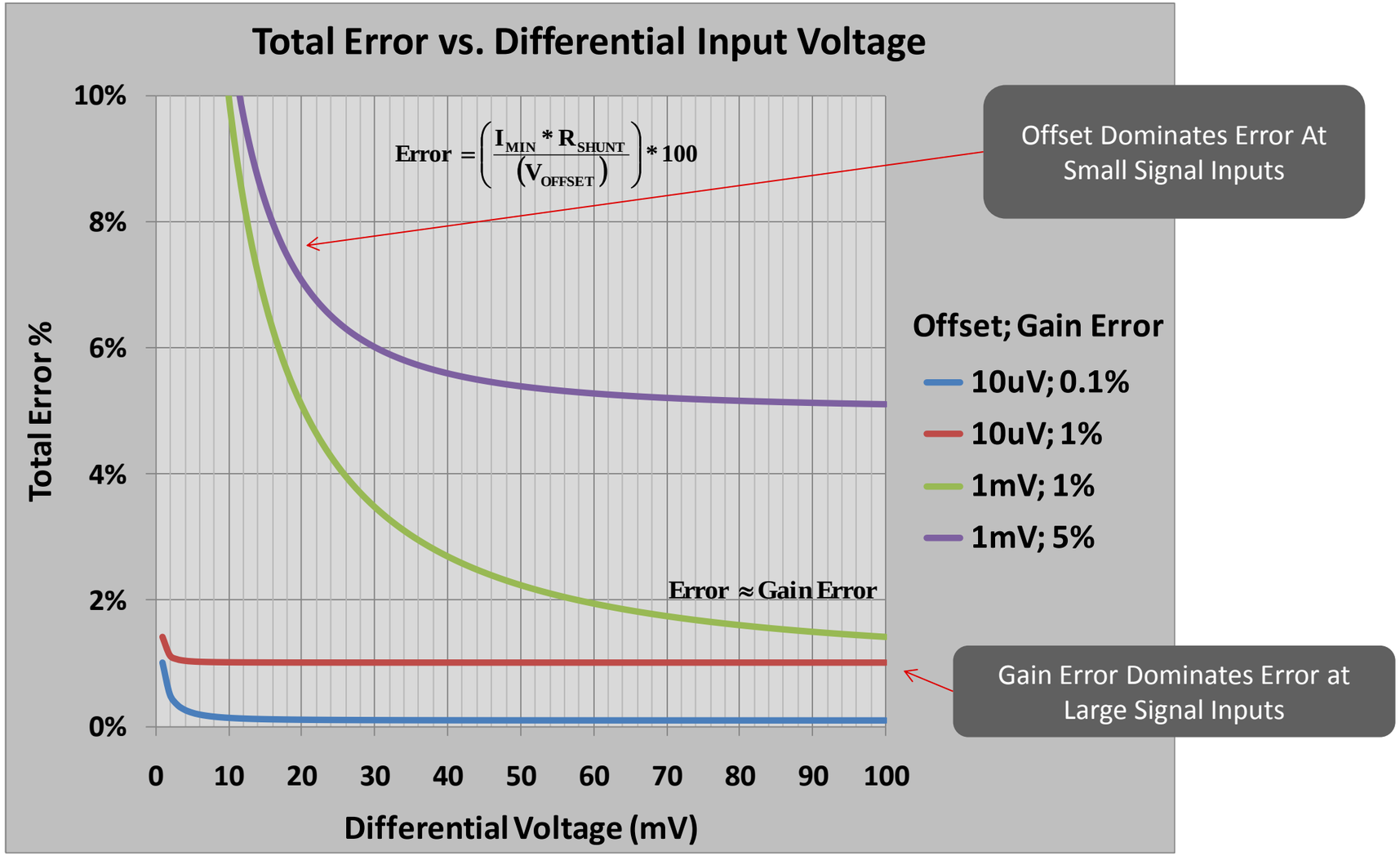

Error Analysis Tools

- Getting Started with Current Sense Amplifiers video training series on TI.com explains the details of calculating individual error components into total error
- Error Analysis Tool in each product folder for current sense products on TI.com

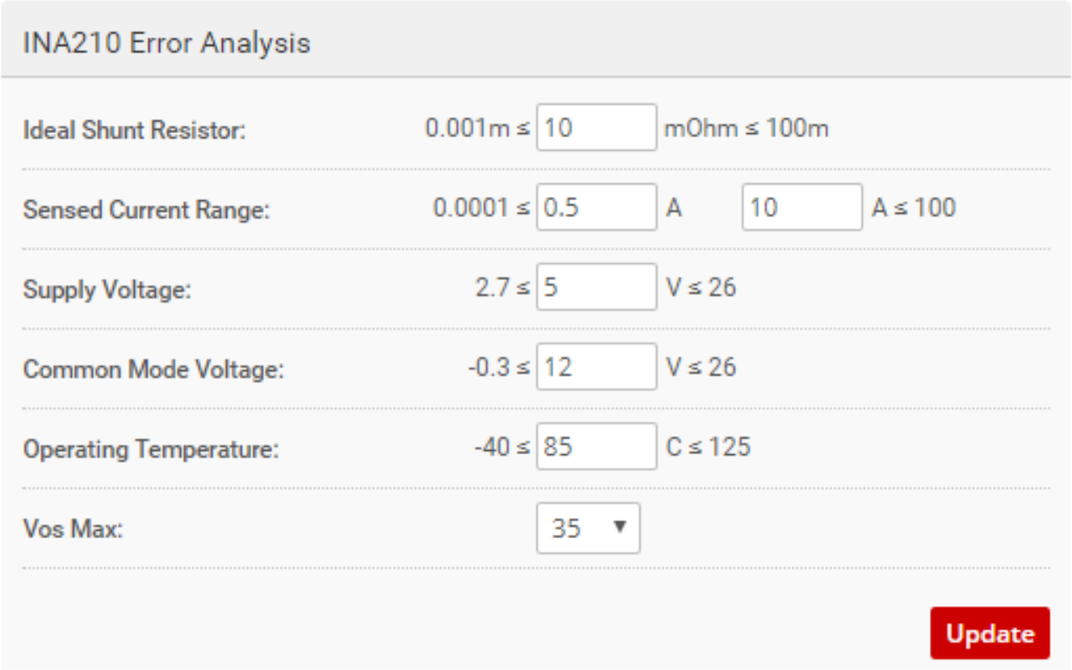

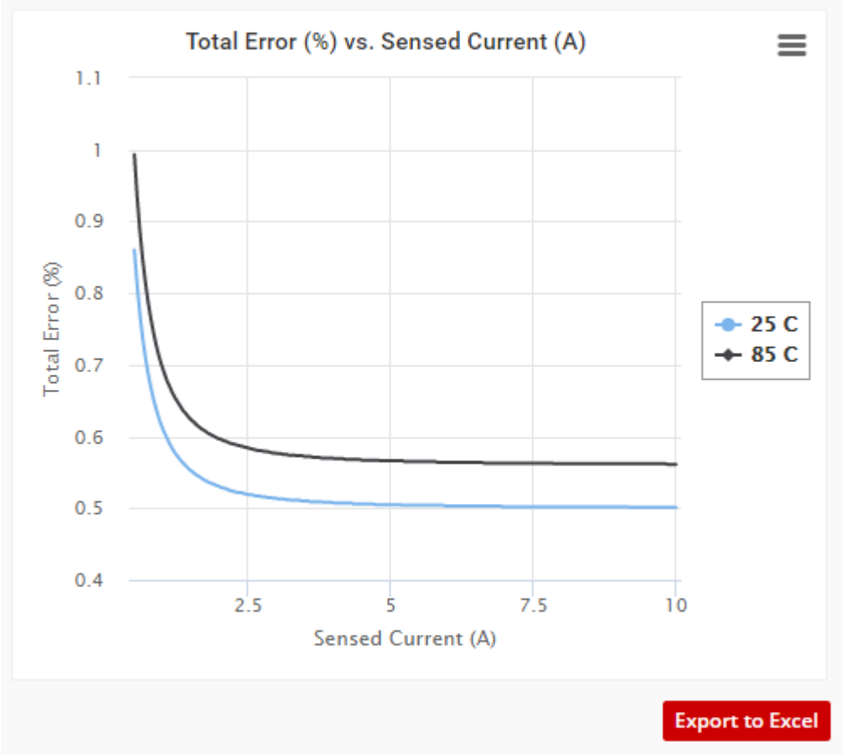

Current Sense Amplifiers

Application Deep Dives

Current & Power Measurement Use Cases

Solutions customers seek

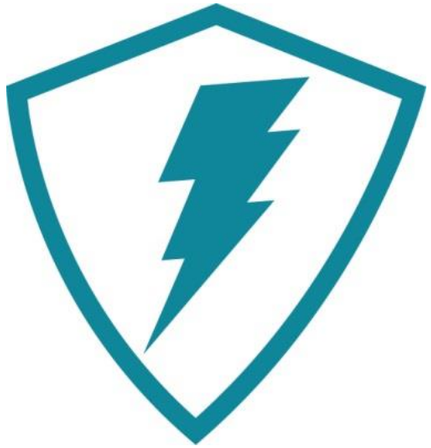

Real-time overcurrent protection (OCP)

Current and power monitoring for system optimization

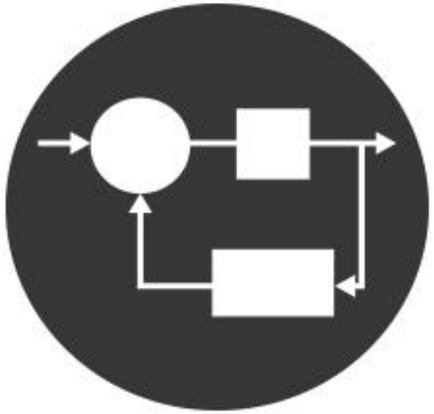

Current measurement for closed loop circuits

Overcurrent Protection

Deep Dive

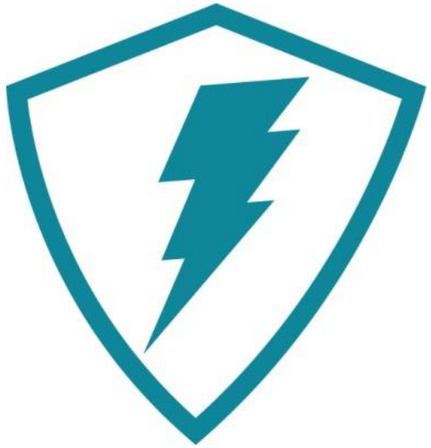

Real-time overcurrent protection (OCP)

Current and power monitoring for system optimization

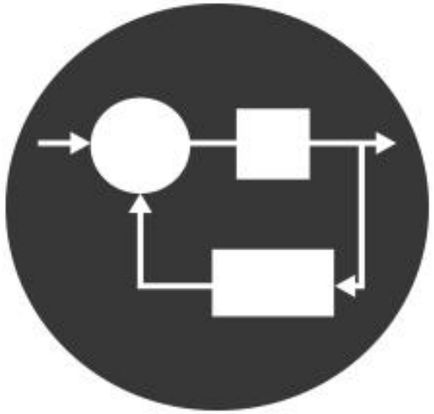

Current measurement for closed loop circuits

Objectives of Overcurrent Protection

- Some common objectives for overcurrent protection are to:
  - Throttle back or cut power to an offending system or sub-system when current exceeds a set threshold
  - Provide a warning and/or a critical alert to a user/controller
  - Save the system before damage occurs
  - Prevent overheating or injury to user

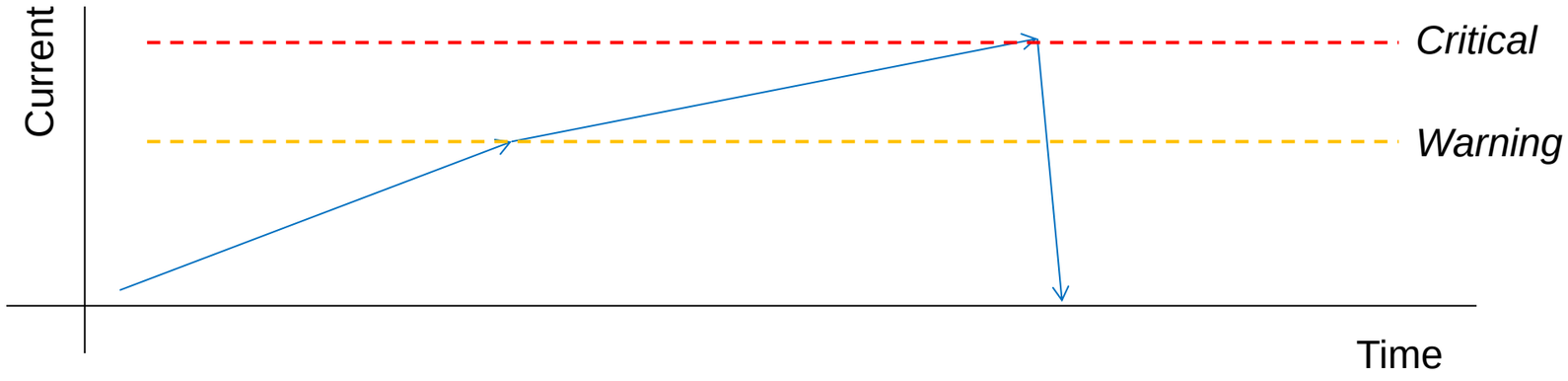

Linear Actuator Overcurrent Example

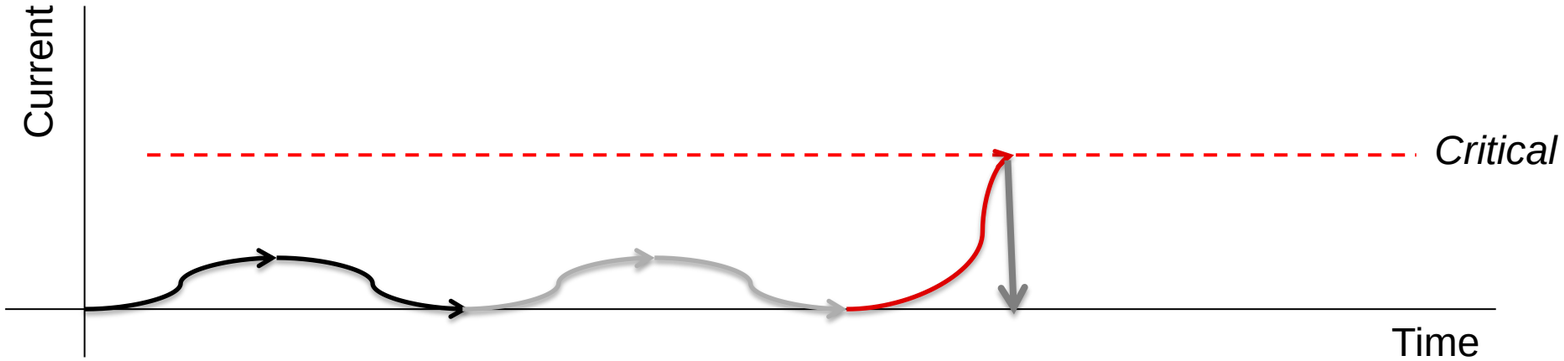

Fuses

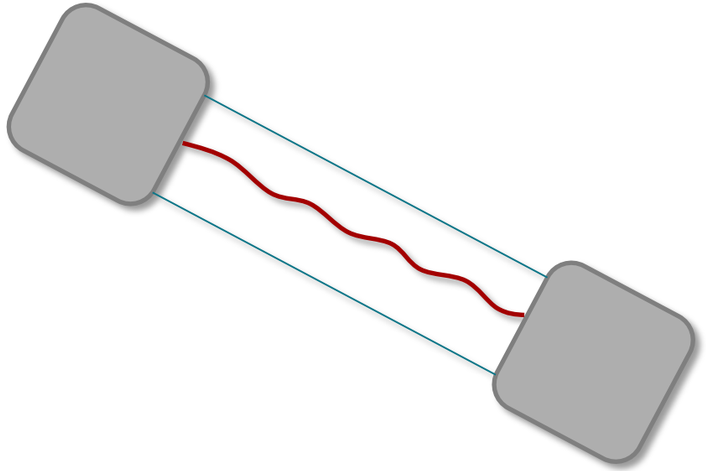

+ Pros
  - Simple
  - Only one component
- Cons
  - Needs replacing every time it blows
    - Recovery needs physical maintenance
  - Fuse blow time is imprecise and slow
    - A typical time for a fuse to blow is when the current is above the fuse rating for ≥100mS
    - The material used and dimensions of the fuse determine the blow time
    - “Slow Blow” and “Anti-Surge” fuses typically have much longer blow times, often seconds
    - “Fast Acting,” “Fast Blow” and “Ultra-Fast Blow” fuses are available too
    - Higher currents blow fuses faster
  - Often fuses are used to protect the whole system and not individual subsystems

Amplifier + Comparator

+ Pros
  - Can be inexpensive
  - Can have very fast response times
  - Flexible gain options
- Cons
  - Low side only
  - Board space and component count
    - Bidirectional current measurement requires even more components
  - Inexpensive can mean inaccurate
    - Error sources compound as more components are added to a system
    - High bandwidth op amps and high speed comparators will add cost
  - Temperature drift

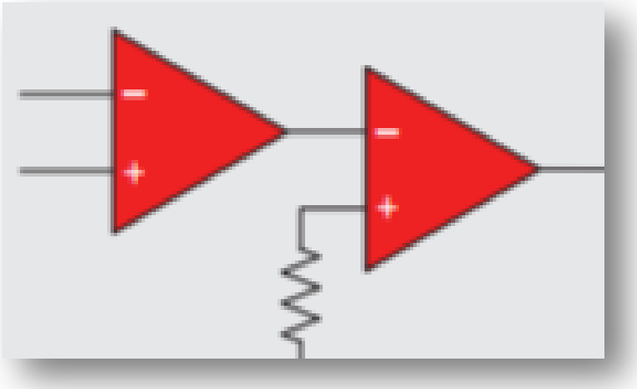

Current Sense Amplifier with Integrated Comparator(s)

+ Pros
  - Low or High side capable with single power supply
  - Low component count
  - Simple to implement and understand
  - Often have programmable delays and hysteresis
  - Often have transparent and latched alert modes
- Cons
  - Typically current sense amplifiers have higher input bias currents than op am
    - Affects small current measurement ability
  - Limited number of fixed gain options available

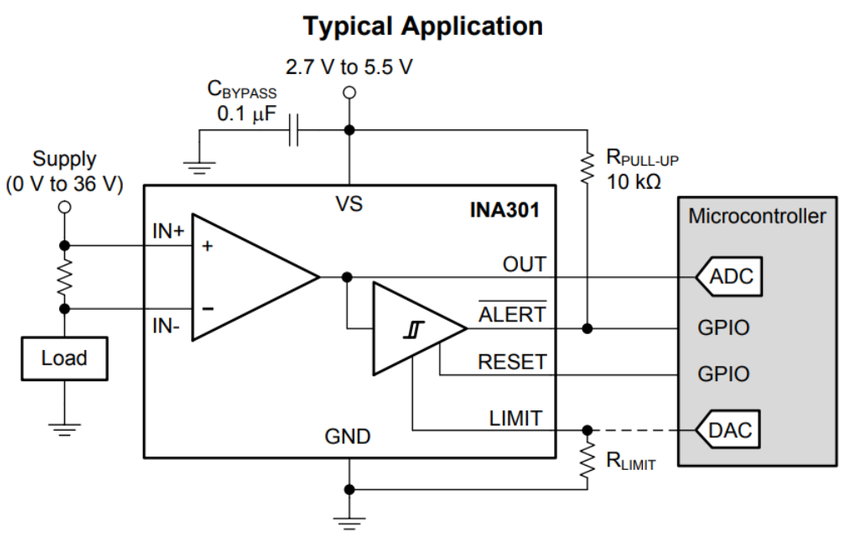

Related collateral

The following information is available for you

Content type	Content title	Link to content or more details
TI Design(s)	TIDA-00795: *Automotive Precision eFuse*	http://www.ti.com/tool/TIDA-00795
Customer training series or webinar session	Getting Started with Current Sense Amplifiers Video Training Series	https://training.ti.com/getting-started-current-sense-amplifiers
Technical blog content or white paper	• *External Current Sense Amplifiers vs. Integrated On-Board Amplifiers For Current Sensing* • *Measuring Current To Detect Out-of-Range Conditions* • *High-Side DC-Link Motor Current Monitoring for Over-Current Protection*	• http://www.ti.com/lit/an/sboa192/sboa192.pdf • http://www.ti.com/lit/pdf/sboa162 • http://www.ti.com/lit/pdf/sboa163
Selection and design tools and models	Error Analysis Tool	On the sidebar in every Current Sensing product folder

Current & Power Monitoring for Optimization

Deep Dive

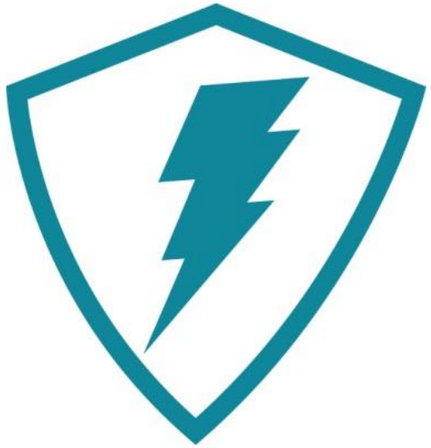

Real-time overcurrent protection (OCP)

Current and power monitoring for system optimization

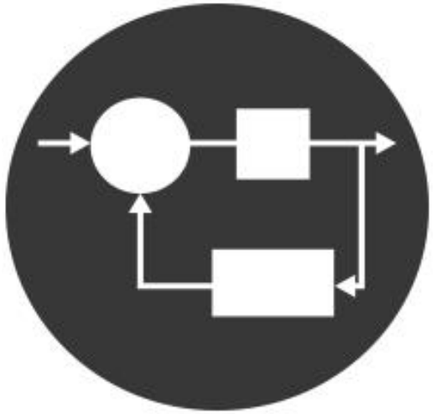

Current measurement for closed loop circuits

Objectives of Current and Power Monitoring

- Some common objectives are:
  - Monitor subsystem power draw
    - Increase or preserve current for select subsystems
    - Identify heavy power consumers
  - Balance supplies and loads
  - Improve system power efficiency
  - Extend battery life, or monitor charging
  - Overcurrent, overvoltage, and over-power protection
    - Provide a warning and/or a critical alert to a user/controller
    - Save the system before damage occurs
    - Prevent overheating or injury to user

Monitoring System Power

- Power requires both a voltage and current to calculate
  - This is most often accomplished with a shunt voltage measurement and a bus voltage measurement
- Typical implementations for power monitoring use ADCs
  - This increases system complexity and device count

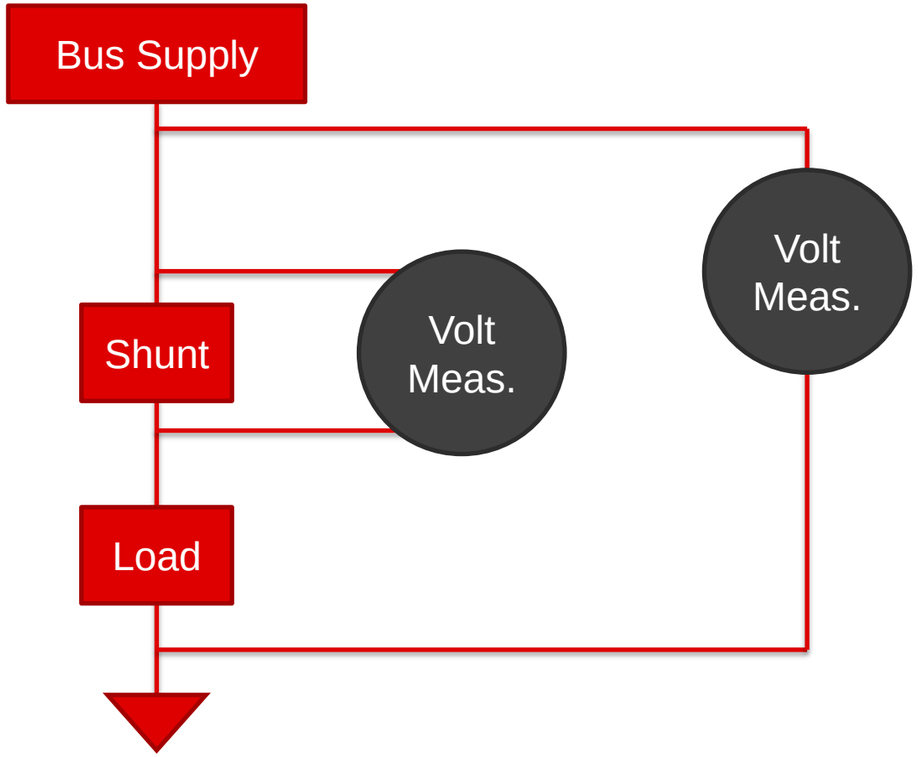

Amp + Mux + ADC + Microcontroller

+ Pros
  - Can achieve very high speed conversions and high accuracy measurements
  - Unfixed gains allow for very flexible range
  - Many µControllers have integrated ADCs onboard

- Cons
  - High component count, PCB area
  - Can get expensive
  - High side and bidirectional measurements increase complexity significantly
  - µController needs to perform math

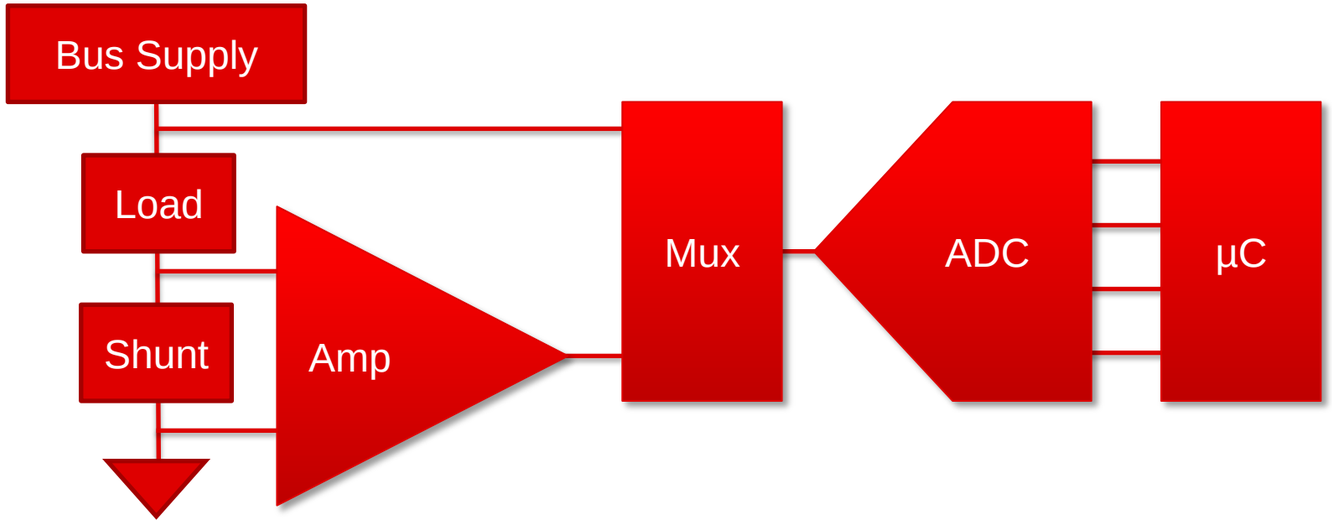

Current Shunt Monitor + Microcontroller

+ Pros
  - Can achieve high speed conversions and high accuracy measurements
  - On-board math engine
  - Programmable alerts
  - Very low component count
  - High side and bidirectional measurements easy
  - Low power/standby modes
- Cons

  \- High input bias currents make it difficult to measure small load currents
  - Can't synchronously sample

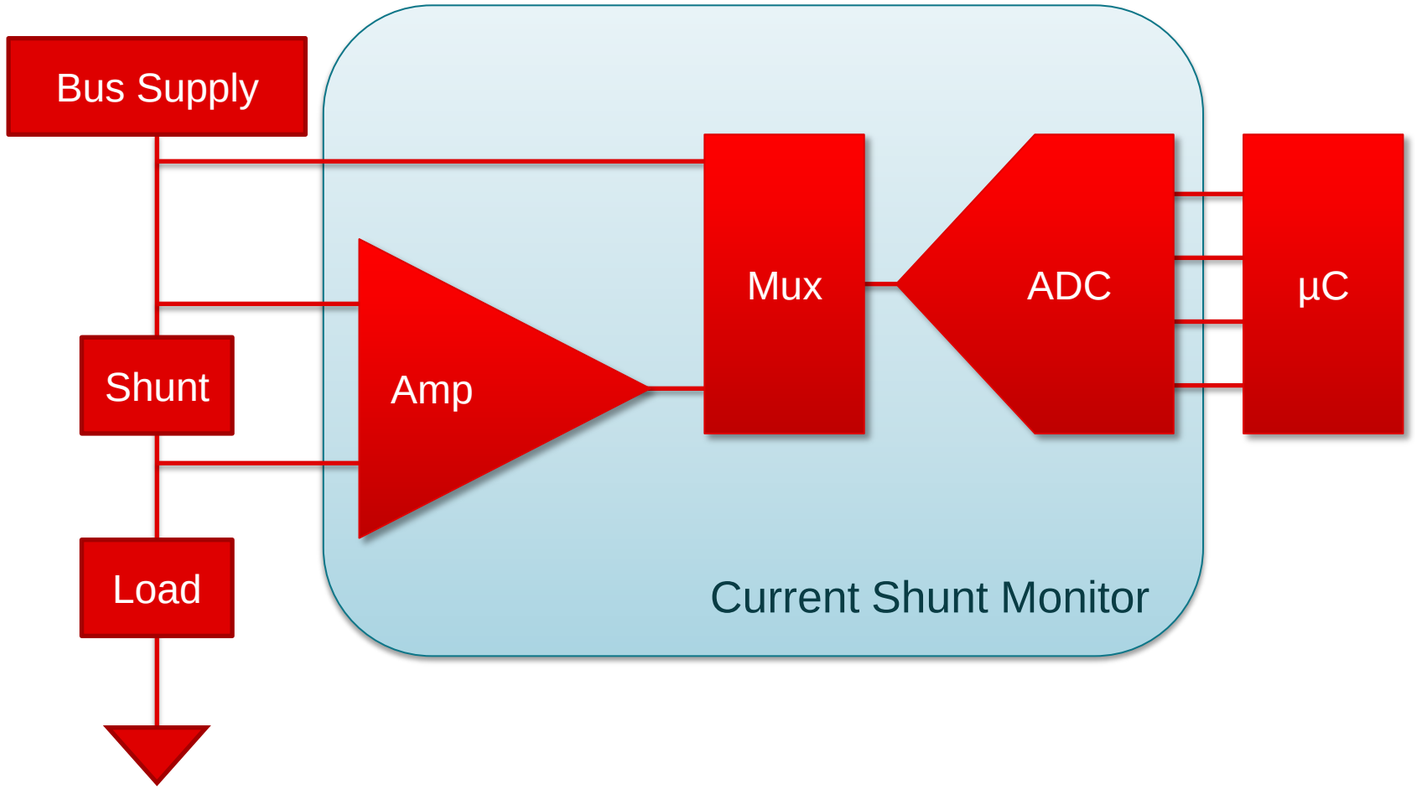

Related collateral

The following information is available for you

Content type	Content title	Link to content or more details
TI Design(s)	TIDA-00313: *-48V Telecom Current/Voltage/Power Sense with Isolation* TIDA-00639: *600V Uni-directional Current/Voltage/Power Monitoring for Solar Smart Combiner Box Reference Design*	http://www.ti.com/tool/TIDA-00313 http://www.ti.com/tool/TIDA-00639
Technical blog content or white paper	• *Energy & Power Monitoring* • *Monitoring Current for Multiple Out-of-Range Conditions*	• http://www.ti.com/lit/pdf/sboa194 • http://www.ti.com/lit/SBOA168

Current Measurement for Closed Loop Circuits

Deep Dive

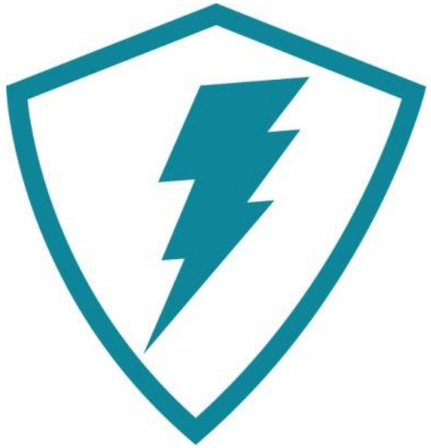

Real-time overcurrent protection (OCP)

Current and power monitoring for system optimization

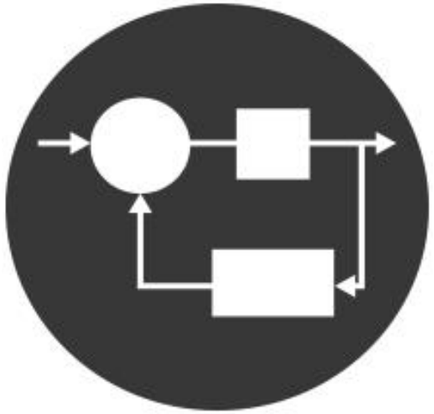

Current measurement for closed loop circuits

Objectives of Current Measurement in Closed Loops

- Some common objectives are to:
  - Provide feedback to power regulators and converters
  - Enable a dynamic power supply to provide appropriate current as needed
    - Especially applicable in battery and super-cap charging applications
  - Facilitate current drive supply design
  - Provide µControllers information on proportional solenoid or motor phase current for optimal FET drive control

Current Limiter Circuit Example

- This application example uses the LM3102 FB node (which has a threshold at 0.8V) to maintain ideal I/V charging conditions in a for a super-cap
- Can apply this type of circuit to other applications like battery charging and LED lighting

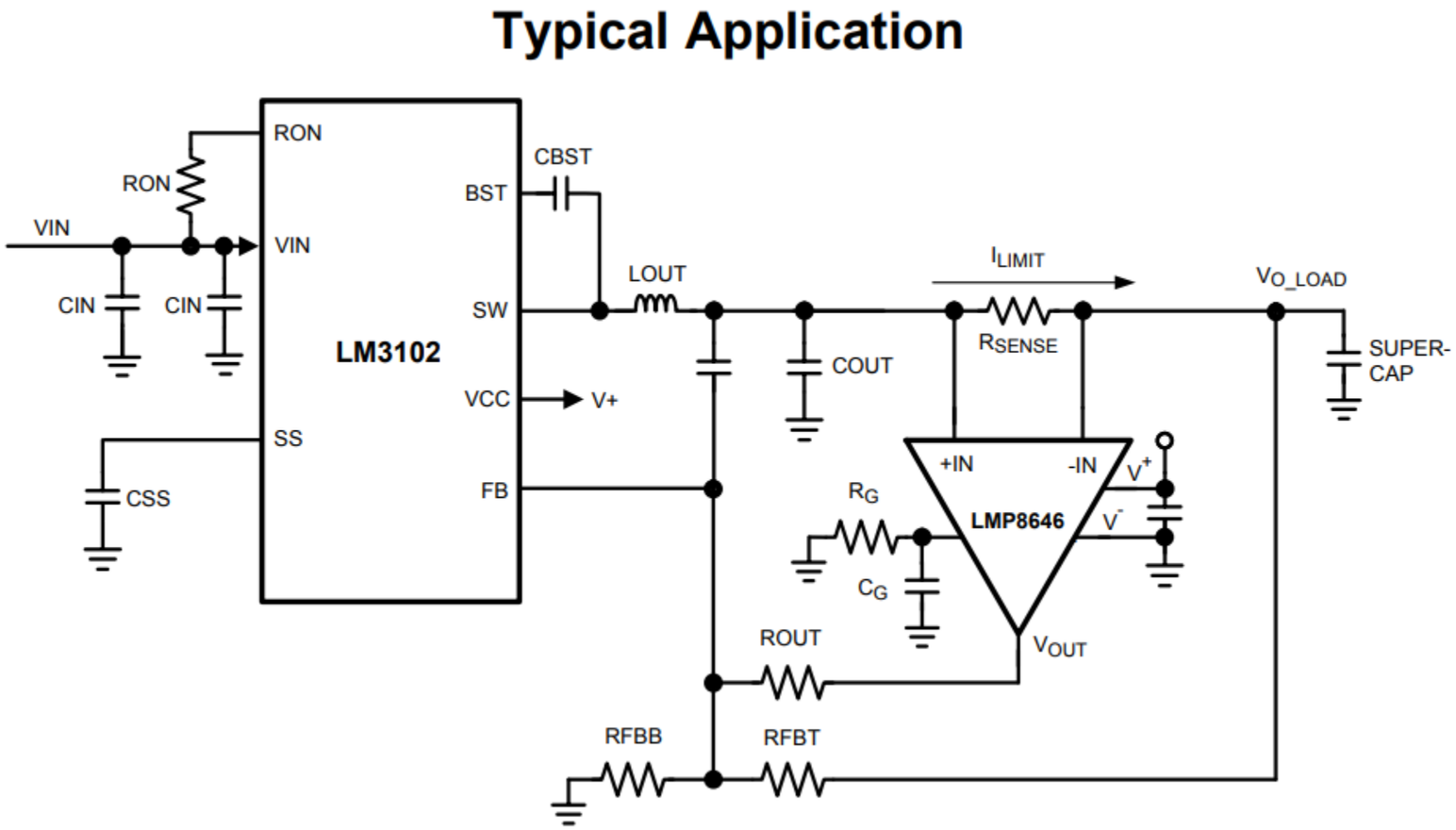

Motor Phase and Total Current Sensing

- Multiple Options for current measurement
- High Side gives total current but sits on a high voltage rail
- Low Side phase sensing gives current draw per phase but not direction and breaks ground
- In-Line phase gives direction but needs to accommodate high and low voltages without changing offset significantly (Common Mode Rejection)

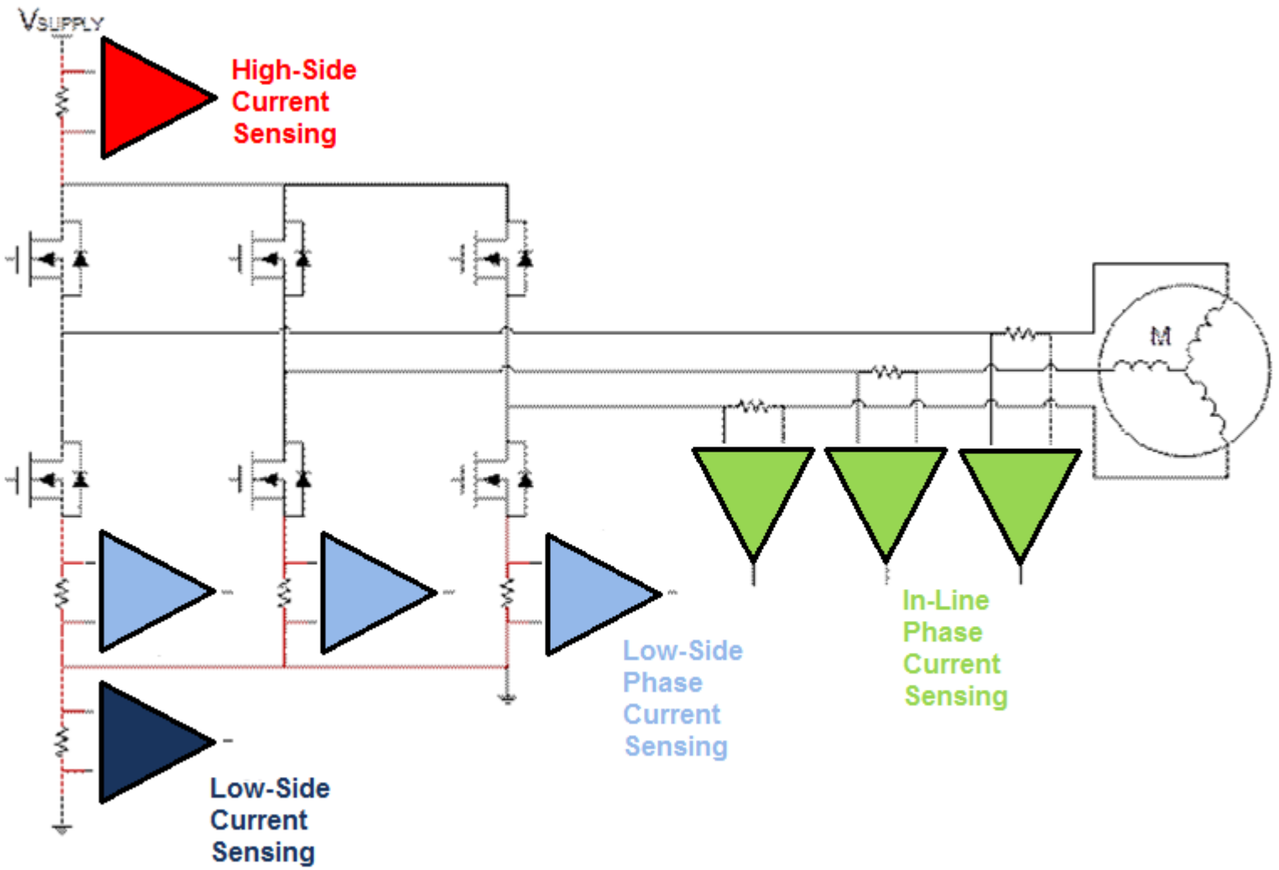

Integrated Shunt Product Benefits Over Discrete Shunts

- Some amplifier and power monitor products from TI have shunts integrated into the package
- Because the shunt material is well characterized, the drift of the silicon is designed to match and so the drift specifications are much better than with inexpensive external shunts
- Also, the gain is trimmed to match the native shunt error, so the overall system specifications are often much better than discrete implementations
- Low drift, high accuracy, 4-wire shunts are available, but the cost of these shunts alone typically significantly exceeds that of an integrated shunt product, complete with shunt and amplifier
- PCB footprint is often significantly smaller than discrete implementation as well

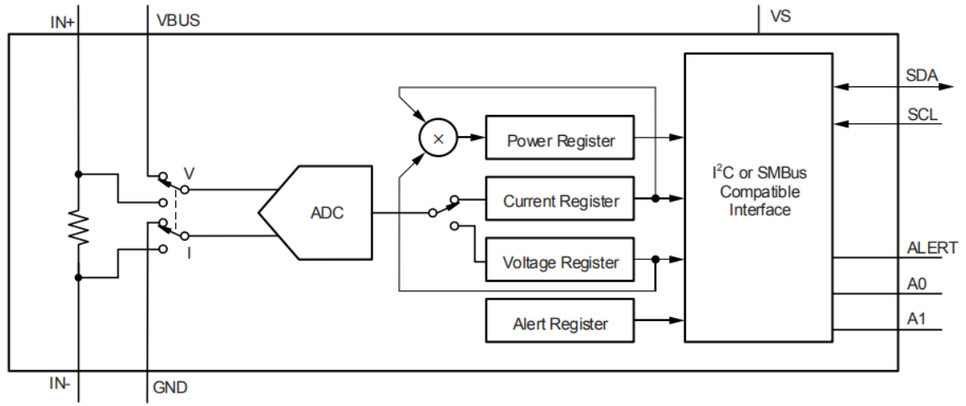

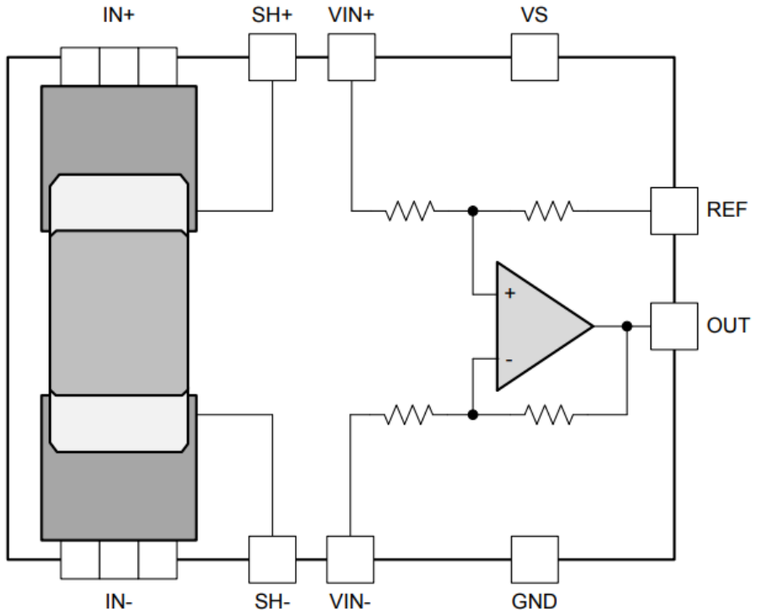

Related collateral

The following information is available for you

Content type	Content title	Link to content or more details
TI Design(s)	TIDA-00913: *48V 3-Phase Inverter with Shunt-based In-line Motor Phase Current Sensing Reference Design*	http://www.ti.com/tool/TIDA-00913
Technical blog content or white paper	• *High Precision, Low-Drift In-Line Motor Current Measurements* • *Low-Drift, Low-Side Current Measurements for Three Phase Systems* • *High-Side Drive, High-Side Solenoid Monitor With PWM Rejection* • *Precision Brightness and Color Mixing in LED Lighting Using Discrete Current Sense Amplifiers*	• http://www.ti.com/lit/pdf/sboa160 • http://www.ti.com/lit/pdf/sboa161 • http://www.ti.com/lit/pdf/sboa166 • http://www.ti.com/lit/pdf/sboa189

© Copyright 2018 Texas Instruments Incorporated. All rights reserved.

This material is provided strictly “as-is,” for informational purposes only, and without any warranty.
Use of this material is subject to TI’s **Terms of Use**, viewable at TI.com