High Frequency Active Clamp Flyback with GaN

Making Power Supplies Smaller

Presenter: Reed Kaczmarek, FAE

Author: John Stevens – Analog Power Products, High Voltage Power

Texas Instruments

Agenda

- Why use the Active Clamp Flyback?
- UCC28780 + UCC24612 Explanation
- Active Clamp and Quasi-Resonant Comparison
- Control Method for ACF

Relevant Applications/ “End-Equipments”

The demand for a smaller footprint

With mobile device battery power increasing, there is a market push for power adapters that can provide the **most** power in the **smallest** form factor.

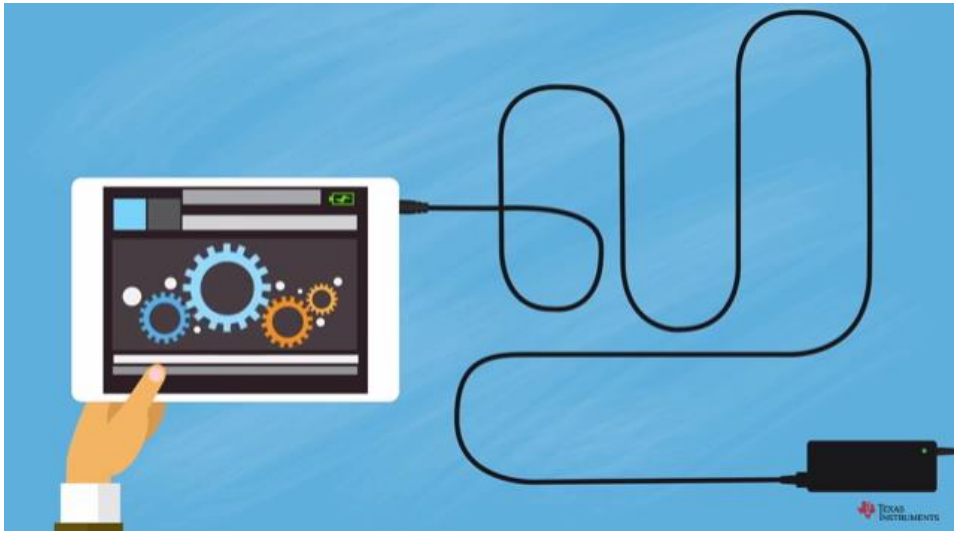

The demand for a smaller footprint

Market Trends Blog

1. Adapters are reaching their breaking point, with the market demanding smaller chargers and longer battery life,

2. Power requirements are increasing, which means larger adapters with limited mobility.

3. The quasi-resonant flyback converter has been the topology of choice… until now.

UCC28780

Adaptive ZVS Active Clamp Flyback Controller

Features

Discovery questions

Pricing, availability, resources

High Power Density

- Efficient operation up to 1 MHz
- Can reduce the solution size in half when compared to existing 25-150 W flyback

High Efficiency

- Guaranteed ZVS with innovative adaptive ZVS algorithm
- Multi-mode operation exceeds DoE Level VI and CoC Tier 2 efficiency standards

Accurate fault protection

- Fast and accurate over power protection allows for reduction in external component oversizing

Flexible Implementation

- Externally programmable for optimization with either GaN or Si FET

Texas Instruments

UCC28780

Adaptive ZVS Active Clamp Flyback Controller

Features

Discovery questions

Pricing, availability, resources

Are you looking to reduce the size of your AC/DC converter?
UCC28780 can cut the size of an AC/DC adapter in half

Are you looking to increase the efficiency or reduce heat of your AC/DC converter?
UCC28780 can enable efficiencies of 95%+

Do you need to meet efficiency standards, such as DoE Level VI or CoC v5 Tier 2?
UCC28780 with UCC24612 can exceed stringent efficiency standards such as DoE Level VI and CoC v5 Tier 2

UCC28780

Adaptive ZVS Active Clamp Flyback Controller

Features

Discovery questions

Pricing, availability, resources

Product Info: http://www.ti.com/product/UCC28780
Pricing 1Ku: $0.60 (UCC28780), $0.40 (UCC24612)

Availability:

- Silicon Samples: http://www.ti.com/product/UCC28780/samplebuy
- GaN Based Evaluation Board: http://www.ti.com/tool/ucc28780evm-002
- Si Based Evaluation Board: Coming Soon
- Datasheet: http://www.ti.com/lit/ds/symlink/ucc28780.pdf
- SIMPLIS Model: http://www.ti.com/lit/zip/slum626
- Mathcad Design Calculator: http://www.ti.com/lit/zip/sluc644

Additional resources:

- Support (E2E): http://e2e.ti.com/support/power_management/isolated_controllers/

HVP-HVC Roadmap
Flyback + SR Controllers

Production | Sampling

	2017 and Before	2018
ACF		**UCC28780** Active Clamp Flyback, QFN-16, SOIC-16
DCM Flyback	**UCC28704** PSR Flyback controller, SOT-23	**UCC28742** SSR Flyback, SOT-23
SR	**UCC24636** Volt-Sec Balancing, SOT-23	**UCC24612** 1 MHz, SOT-23 VDS sensing, SOT-23

Why UCC28780 matters

UCC28780

- **Why did we develop this device?** To eliminate switching loss in AC/DC power converters so that efficiency and frequency could be increased together to drastically reduce power supply size and improve power density
- **What problems are we solving?** The best Flyback controllers today still suffer from switching loss limitations that prevent them from being used widely above 150 kHz
- **How does this fit into a system?** This controller is a primary side controller in an opto-coupler feedback based Secondary-Side Regulation AC/DC power converter
- **Key Features**:
  - Achieves ZVS across load and line conditions
  - 1 MHz Switching Frequency
  - Exceeds CoC and DoE Efficiency standards using Multi-mode control
  - Supports use of GaN or Silicon Power FETs

Why UCC24612 matters

UCC24612:

- **Why did we develop this device?** Industry first 1-MHz Synchronous controller optimized for Active Clamp Flyback topology
- **What problems are we solving?** No SR controller today to support Active Clamp Flyback at 1-MHz in small, low cost SOT-23 package
- **How does this fit into a system?** This controller is a Secondary side controller in an opto-coupler feedback based Secondary-Side Regulation AC/DC power converter
- **Key Features**:
  - Supports CCM/QR/DCM operation for multiple topologies including Active Clamp Flyback, Flyback, and LLC
  - 1 MHz Switching Frequency
  - No design required and only bypass cap required externally
  - Proportional Gate Drive for fastest turn-off and highest efficiency

Active clamp flyback: more power in less space

The active clamp flyback is able to achieve high performance in the smallest form factor.

- **Eliminates switching losses and reduces EMI** with proper control of the clamp which allows **zero voltage switching (ZVS) to be achieved**.
- **Improves efficiency** over traditional flyback converters by recirculating the leakage energy and delivering it to the output instead of dissipating it
- **Enables greater power density** Lower switching losses enables higher switching frequencies, which allows for smaller passive components

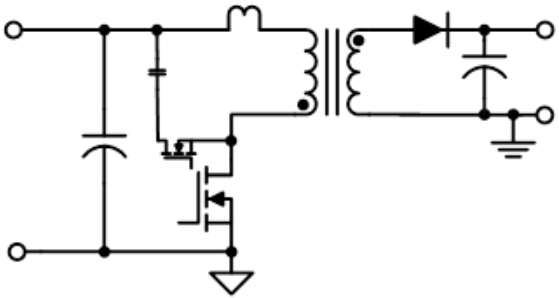

Watch an introductory training for the active clamp flyback

TI Active Clamp Flyback Chipset

More power in less space

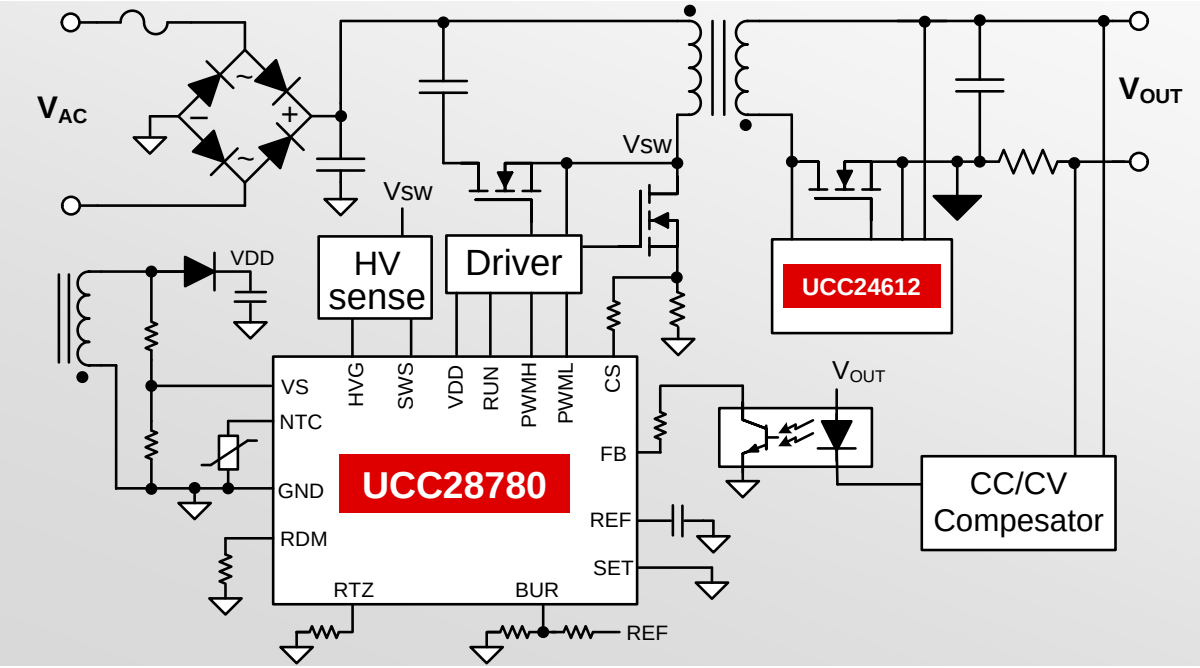

UCC28780 Active Clamp Flyback

High frequency without a heatsink

- 1 MHz GaN or Si FET support
- Best in class efficiency from innovative ZVS algorithm
- Advanced protection features
- 3 patents filed

UCC24612 Advanced Sync Rectifier

High performance, simplified design

- Up to 1 MHz support with Si FET
- Wide voltage range operation
- Intelligent control provides near ideal diode emulation

TI Active Clamp Flyback vs Existing Solutions

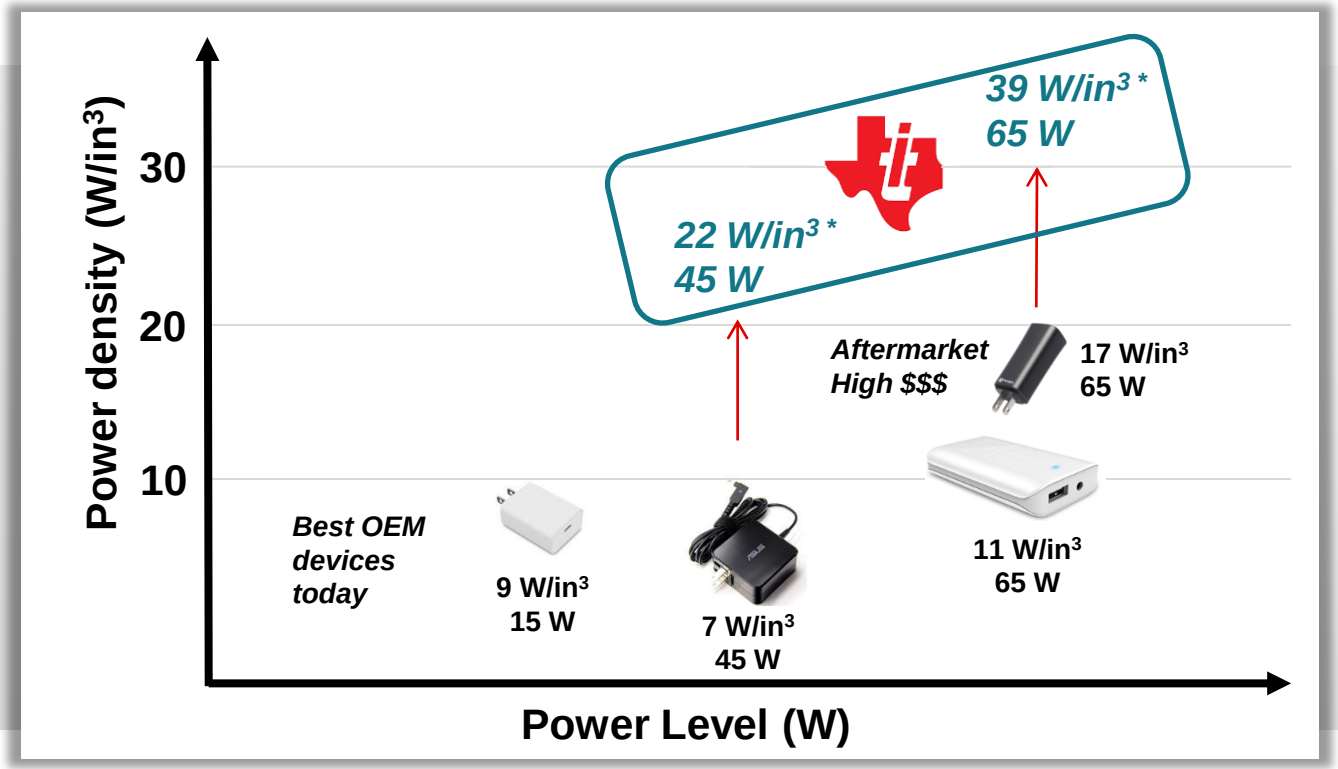

TI Solution:

1. Over 2x Greater Power Density
2. Efficiency up to 95%

** Open frame power density*

UCC28780+UCC24612 benefits

…BY THE NUMBERS

50 %

Smaller footprint

95 %

Efficiency at full-load

< 40 mW

Standby power

Texas Instruments

UCC28780 | High Frequency Active Clamp Flyback

★ New Device

Features

- Capable of both **full ZVS and partial ZVS** detections for primary switches using **GaN and Si FETs**
  - Fast, self correcting ZVS tuning with dead time optimizer
- Switching frequency **up to 1MHz**
- Mix-mode control
  - Adaptive Amplitude Modulation with variable switching frequency control
  - Programmable Light load Adaptive Burst Mode
- Resistor programmability for power stage optimization
- Internal soft start, open/short pin fault, and programmable Output OVP, brownout protection, OCP, OPP and OTP
- Secondary-side regulation for CV/CC operation
- Dual purpose ZVS sensing and high voltage startup
- Logic level outputs with enable
- Package: SOIC-16 and 3x3mm QFN (0.50mm pitch)

Applications

- **High-density adapters and chargers**
- **USB PD for cell phone, tablet, and notebook chargers**
- **AC/DC or DC/DC auxiliary power supplies**

www.ti.com/product/UCC28780

Benefits

- ZVS eliminates switching losses for higher switching frequency
  - Reduced generated EMI and transformer size
- Mixed mode control maximizes performance
  - Maintain ZVS over line, load and component tolerances
  - Highest average efficiency for the entire line/load range
  - Reduces output voltage ripple
  - Eliminates risk of audible noise
- External HV start up FET enables **standby power below 75mW**
- Flexible to work with Si FET driver or GaN power stages
- Accurate OPP reduces required oversize of power stage components
- **Satisfies DOE Level VI and CoC v5 tier 2 efficiency standards**

QFN-16

SOIC-16

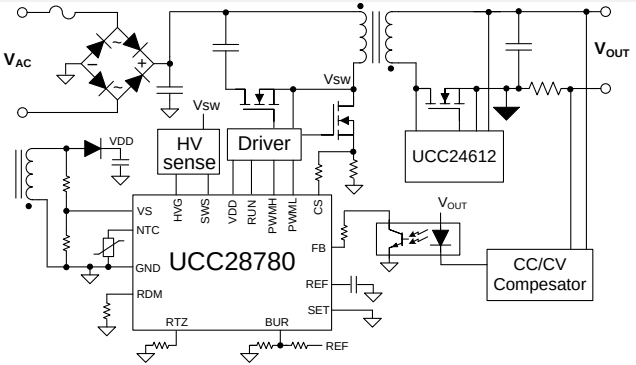

Power Stages for ACF Efficiency test

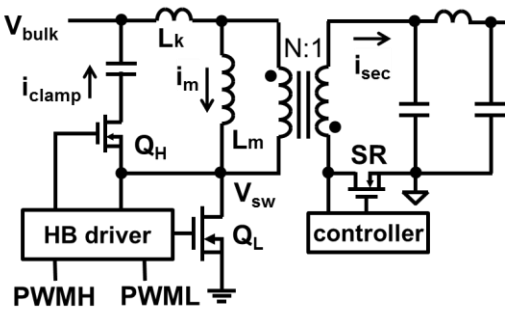

GaN ACF (UCC28780 EVM)

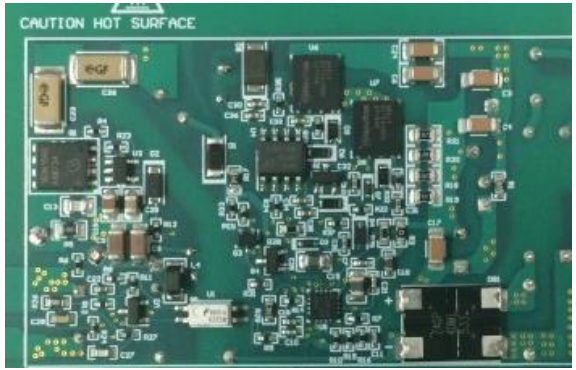

Si ACF

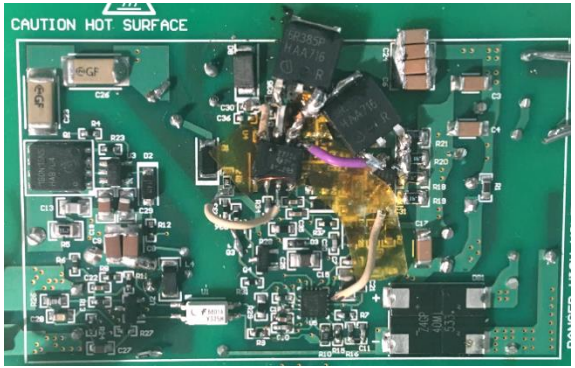

	Resonance Approach	Pri FET	High-side Driving	C_{clamp}	R_{RTZ}
GaN ACF	Sec. resonance	NV6117(Q_L) NV6115 (Q_H)	ISO7710	0.44uF	240kΩ
Si ACF	Sec. resonance	CP 350mΩ	UCC27712	0.88uF	348kΩ

Texas Instruments

Full-Load Efficiency Comparison

Condition: (1) same RM8LP XFMR;
(2) same EMI filter;
(3) same output filter;
(4) similar f_{sw} range

	90Vac	265Vac
Si QR	92.12% (f_{sw}=237kHz)	**89.93%** (f_{sw}=413kHz)
Si ACF	**93.12%** (f_{sw}=206kHz)	93.51% (f_{sw}=285kHz)
GaN ACF	**94.14%** (f_{sw}=227kHz)	94.63% (f_{sw}=295kHz)

➢ **20V/45W Efficiency:**

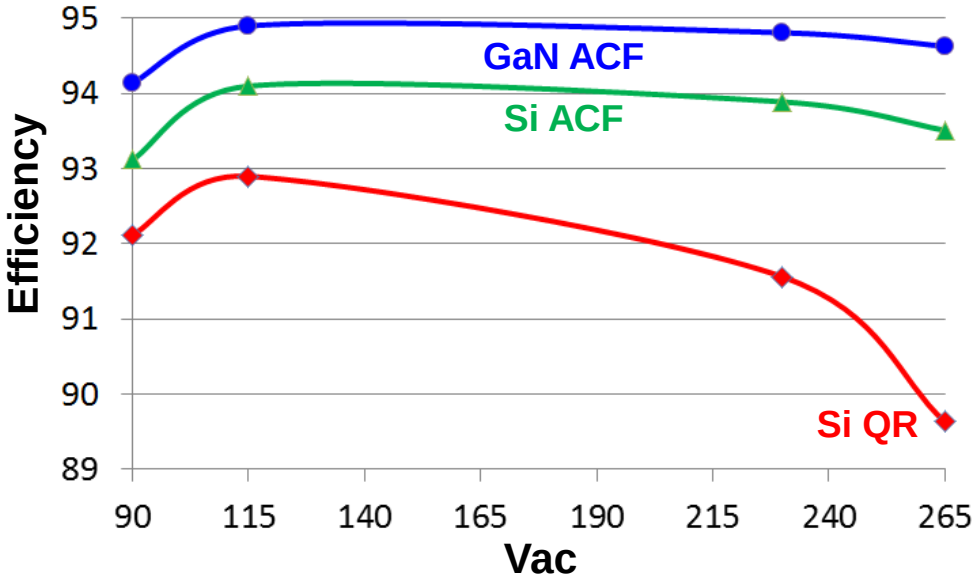

- **Si ACF provides 3.6% improvement over Si QR at 265Vac.**
- **With same EMI filter, Si ACF is 1% lower than GaN ACF at 90Vac.**

Texas Instruments

UCC28780 Collateral

The following information is available online

Content type	Content title	Link to content or more details
Training Video	What is an Active Clamp Flyback?	https://training.ti.com/what-active-clamp-flyback
Technical Note	Increasing Power Density With the Active Clamp Flyback Controller (UCC28780)	http://www.ti.com/lit/an/slua871/slua871.pdf
GaN Reference Design	30-W/in^3, 92% Efficiency, 65-W USB Type-C PD AC/DC Adapter Reference Design	http://www.ti.com/tool/TIDA-01622
Si Reference Design	High Efficiency, High Power Density Active Clamp Flyback Adapter with SJ FET Reference Design	http://www.ti.com/tool/PMP40328
Evaluation Module (EVM)	45-W High-Density Active-Clamp Flyback AC-DC Converter Evaluation Module Using GaN MOSFETs	http://www.ti.com/tool/ucc28780evm-002
Datasheet	UCC28780 Datasheet	http://www.ti.com/lit/ds/symlink/ucc28780.pdf
Design Calculator	UCC28780 Mathcad Design Calculator	http://www.ti.com/lit/zip/sluc644
SIMPLIS Model	UCC28780 and UCC24612 SIMPLIS simulation model	http://www.ti.com/lit/zip/slum626
High Voltage Interactive Technical Training Video	Active Clamp Flyback (Part 1 and 2)	Part 1: https://training.ti.com/active-clamp-flyback-part-1?cu=1134585 Part 2: https://training.ti.com/active-clamp-flyback-part-2?cu=1134585

Evaluate a design today!

Simple plug and play EVMs are available now:
www.ti.com/tool/ucc28780evm-002

- Features include adaptive modes to minimize power loss and increase efficiency to 95%!!

www.ti.com/tool/ucc24612-1evm

- Supports high side or low side SR and 4V to 28V output applications.

For basic evaluation instruction, read the UCC28780EVM and UCC24612EVM user guides.

Increased efficiency for AC/DC designs

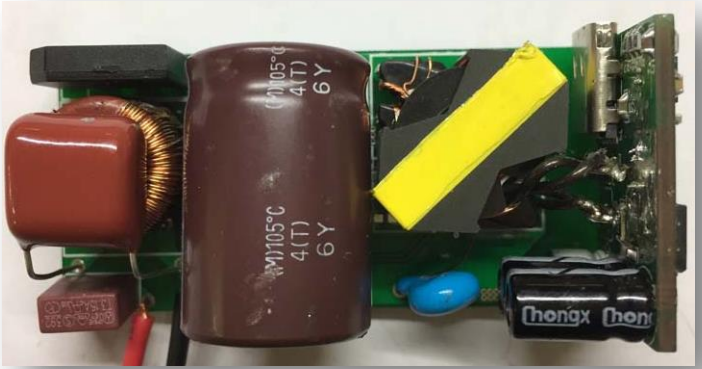

The **30-W/in3, 92% Efficiency, 65-W GaN FET USB Type-C PD AC/DC Adapter Reference Design** with universal input voltage range (85- to 265-V AC) for laptop adapters and smartphone charger applications. Supports Output Voltage 5-20V.

- TIDA-01622 and tools folder
- Design guide

The **15-W/in3, 90% Efficiency, 45-W Active Clamp Flyback Charger with SJ Silicon MOSFET Reference Design is** a **Design** with universal input voltage range (85- to 265-V AC) for fast mobile charging applications compatible with USB-PD 3.0 PPS voltage range. Supports Output Voltage 5-9V.

- PMP40328 and tools folder

UCC24612-x | Multi-mode Synchronous Rectifier

★ New Device

Features

- **V_{DS} sensing up to 230 V**
- Adaptive off time adjust blanking time according to power stage
- Support QR/DCM and CCM operation
  - Fast turn off propagation delay
  - Proportion drive for light CCM operation
  - Cycle limit for deep CCM operation
- V_{DD} operation up to 28V DC, minimum of 4.2V
- Operation up to **1 MHz**
- Automatic sleep mode
- Two variants for support of multiple topologies
  - UCC24612-**1** with 70ns turn on delay
    - Best for GaN ACF, DCM, QR/TM, CCM flyback
  - UCC24612-**2** with 150ns turn on delay
    - Best for Si ACF, LLC
- Package: SOT-23-5

Applications

- **High density and USB-PD adapters**
- **High efficiency AC/DC converter**
- **AC/DC or DC/DC auxiliary power supplies**

Benefits

- V_{DS} sensing and adaptive off time reduces required parts and eliminates design effort
- High V_{DS} rating supports large output voltages with overshoot
- Sleep mode enables low standby power consumption
- Near-ideal diode emulation enables **compliance with EC CoC Tier 2 and DoE Level VI efficiency standards**

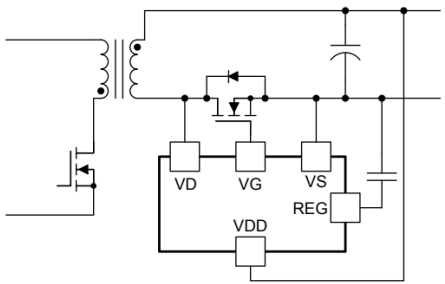

Configured Low Side

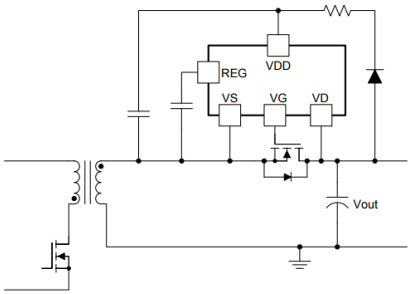

Configured High Side

SOT 23

www.ti.com/product/UCC24612

UCC24612 Design Tools

Retrofit Daughter Card EVM

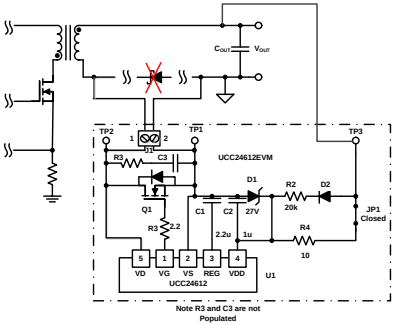

UCC24612 Retrofit Daughter Card EVM

Replace any diode based design with UCC24612 based SR to measure performance gains

www.ti.com/tool/UCC24612-1EVM

SIMPLIS Model

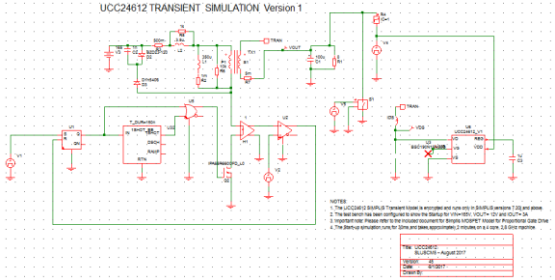

SIMPLIS Simulation Model

Simulate performance to help finish designs faster

www.ti.com/lit/zip/slum597

Range Extension App Note

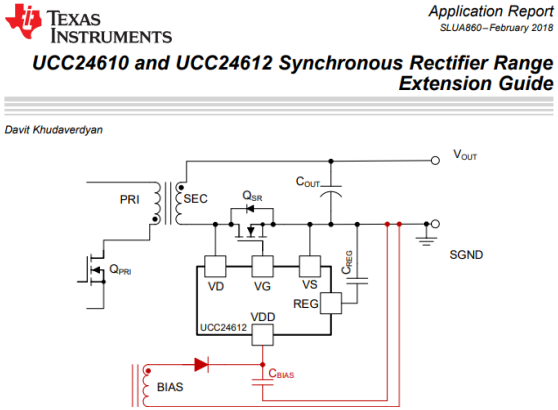

Range Extension App Note

Learn how to configure UCC24612 to work beyond the typical parameters

www.ti.com/lit/an/slua860/slua860.pdf

UCC24612 Customer Collateral

The following information is available for you to send for customers

Content type	Content title	Link to content or more details
Evaluation Module (EVM)	Secondary-Side Synchronous Rectifier Controller Diode-Replacement Demonstration Board	http://www.ti.com/tool/ucc24612-1evm
SIMPLIS Model	UCC24612 SIMPLIS Model	http://www.ti.com/lit/zip/slum597
Datasheet	UCC24612 Datasheet	http://www.ti.com/lit/ds/symlink/ucc24612.pdf
LLC Reference Design	80+ Platinum, 93% Efficiency, Super Transient, 450W AC/DC Reference Design with Single-Layer PCB	http://www.ti.com/tool/TIDA-01501
LLC Reference Design	24V, 480W Nominal 720W Peak, >93.5% Efficient, Robust AC/DC Industrial Power Supply Reference Design	http://www.ti.com/tool/TIDA-01494
Evaluation Module (EVM)	45-W High-Density Active-Clamp Flyback AC-DC Converter Evaluation Module Using GaN MOSFETs	http://www.ti.com/tool/ucc28780evm-002

Additional Power Sockets

Depending on the design there may be more sockets

Additional HVP Sockets

UCC28056 6-Pin CRM/DCM PFC Controller

- Required when PFC is needed, typically >75W

UCC27712 620V Half Bridge Driver

- Required with Si FET

Additional TI Sockets

ATL431 Low-Iq Precision Shunt Regulator

- Required for opto based feedback

CSD19532 NexFET

- Required when SR is used

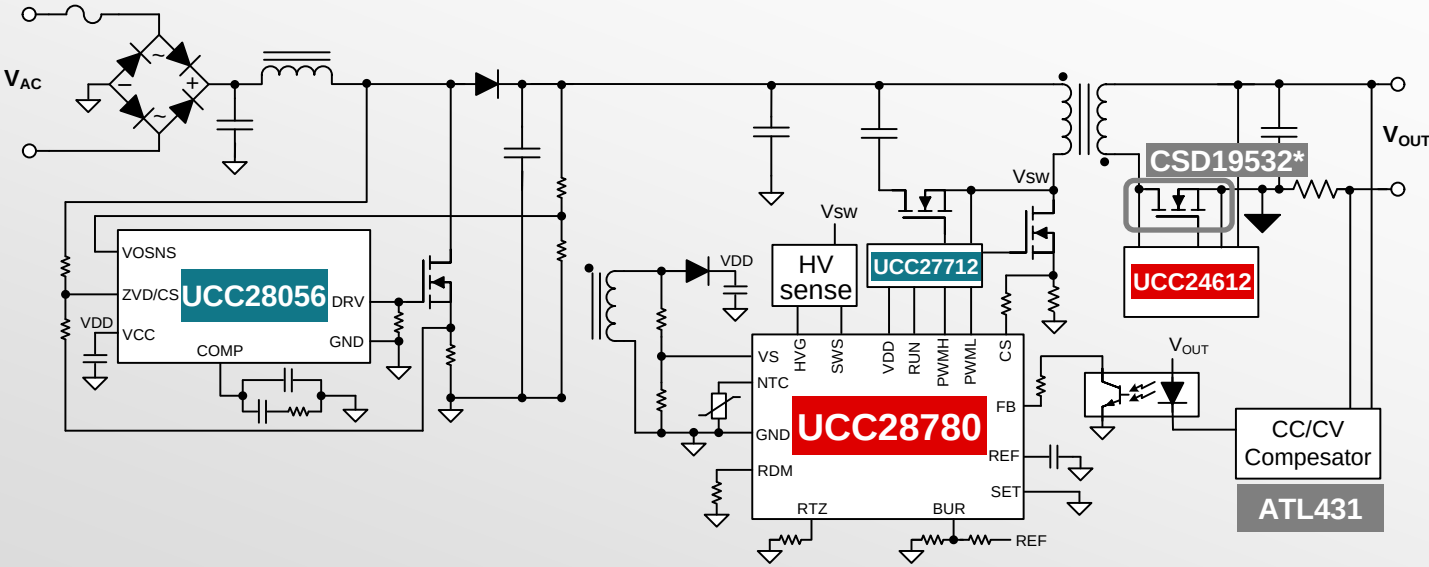

*depending on output voltage and power level

Texas Instruments

Valley Switching (QR) Flyback

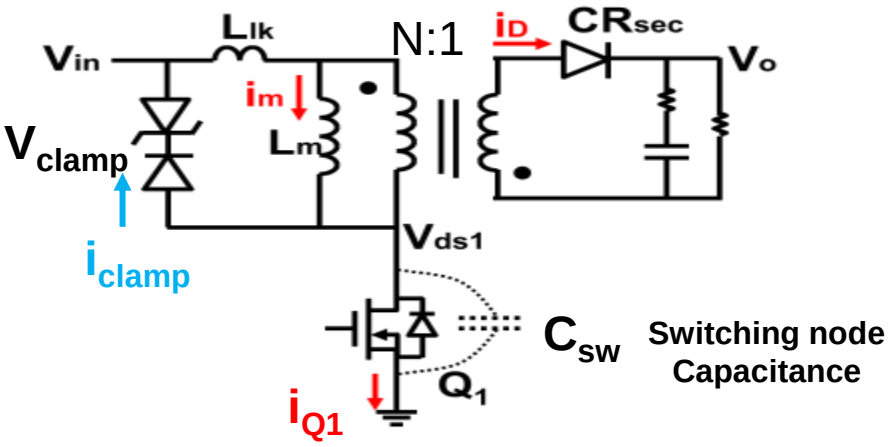

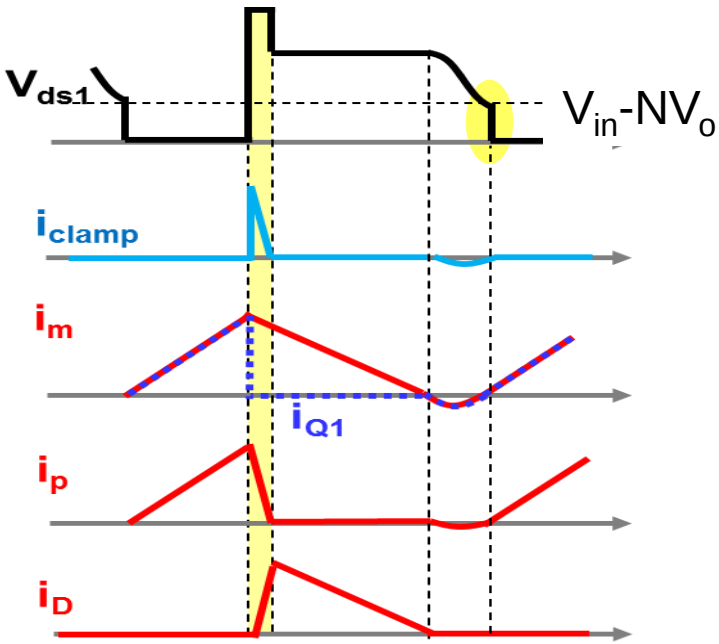

- **Limitations of higher switching frequency:**

- Clamping loss: $P_{clamp} = \frac{V_{clamp}}{V_{clamp} - NV_o} \frac{1}{2} L_k I_{pk}^{\ 2} f_{sw}$

- Switching loss: $P_{Csw} = \frac{1}{2} C_{sw} (V_{in} - NV_o)^2 f_{sw}$

Clamping and switching loss are bottlenecks for high frequency operation

Texas Instruments

Active Clamp Flyback (ACF)

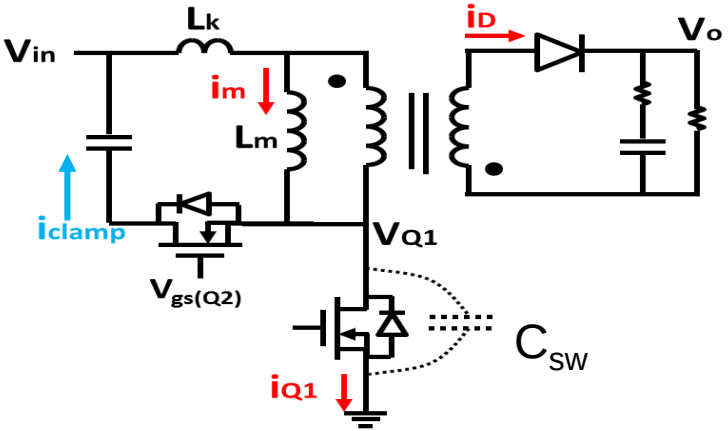

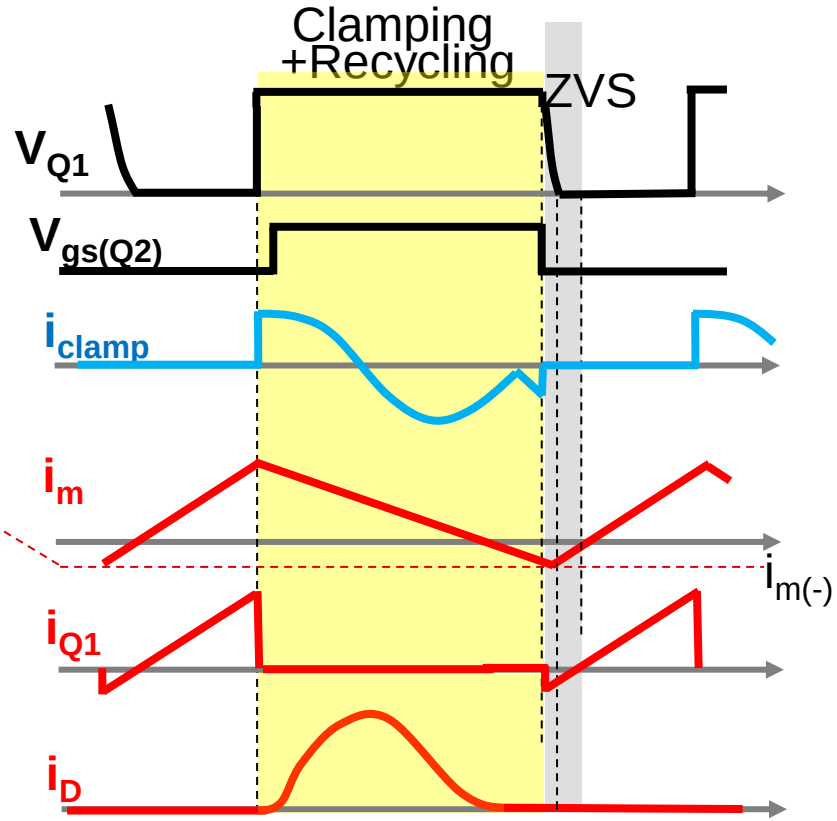

ZVS criteria: $\frac{1}{2} L_m i_{m(-)}^{\ 2} \geq \frac{1}{2} C_{sw} V_{ds}^{\ 2}$

- **Issue of higher $i_{m(pk\text{-}pk)}$:**

RMS loss: $P_{RMS} = i_{RMS}^{\ 2} R$

Core loss (3F36): $P_{core} \propto i_{pk}^{\ 3.26} f_{sw}^{\ 1.44}$

Texas Instruments

USB-PD Block Diagram

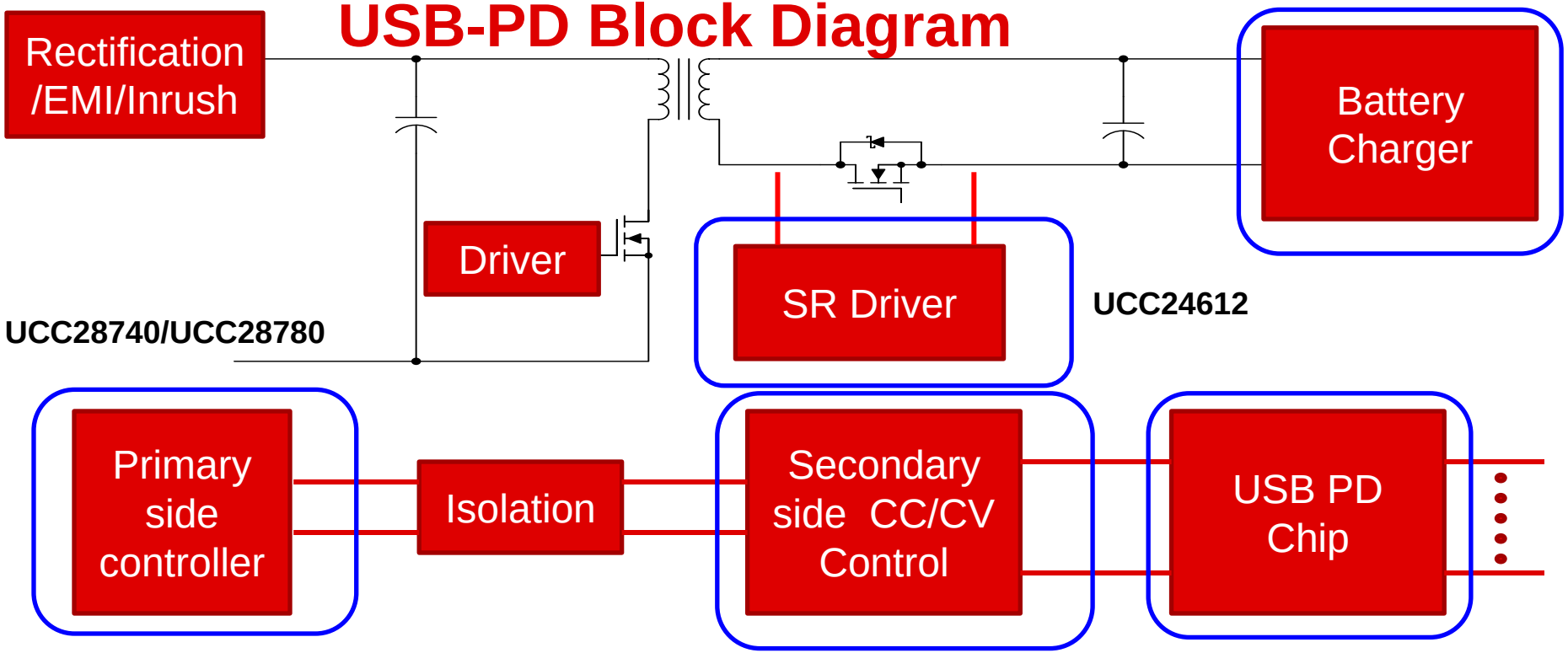

- 6+ ICs , 2-3 discrete FETs solution: system becoming more complicated!
- Demands that power supply get smaller for similar user experience

Flexible Interfacing to Different Power Stage

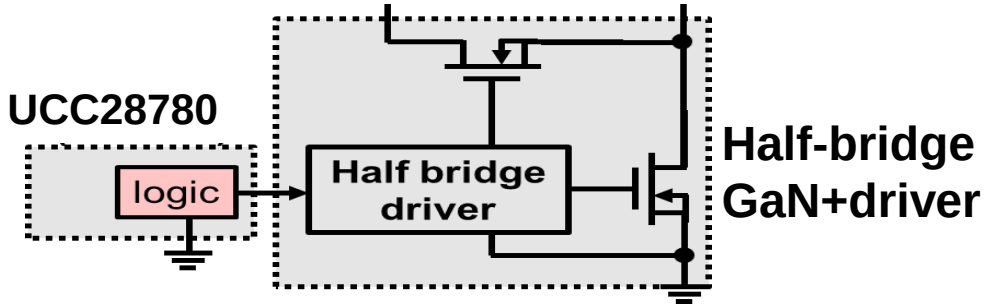

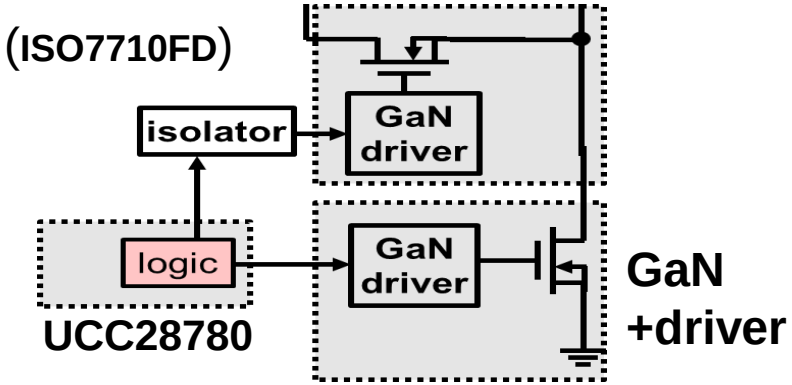

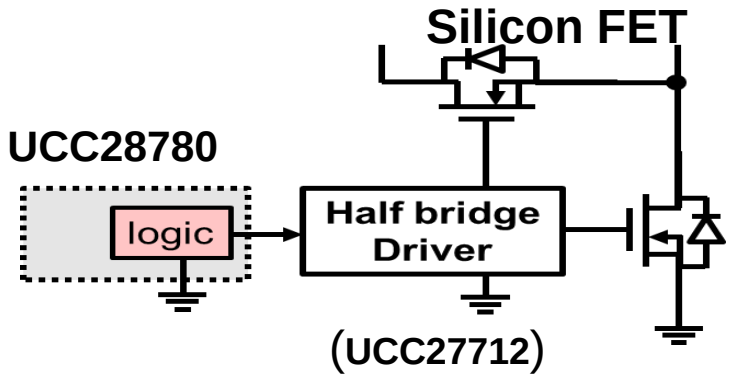

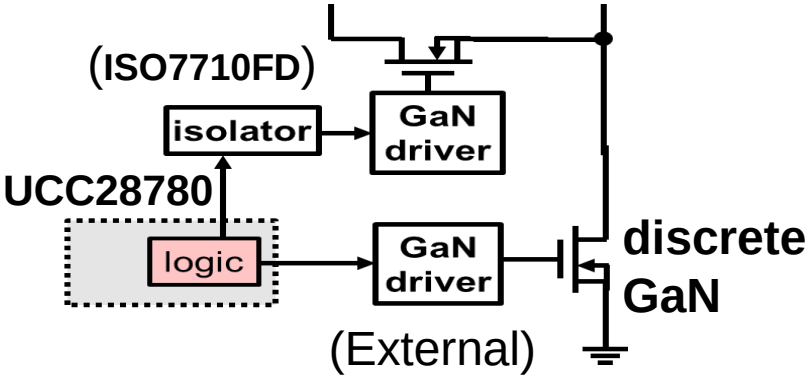

Simplified Schematic with Half-Bridge GaN

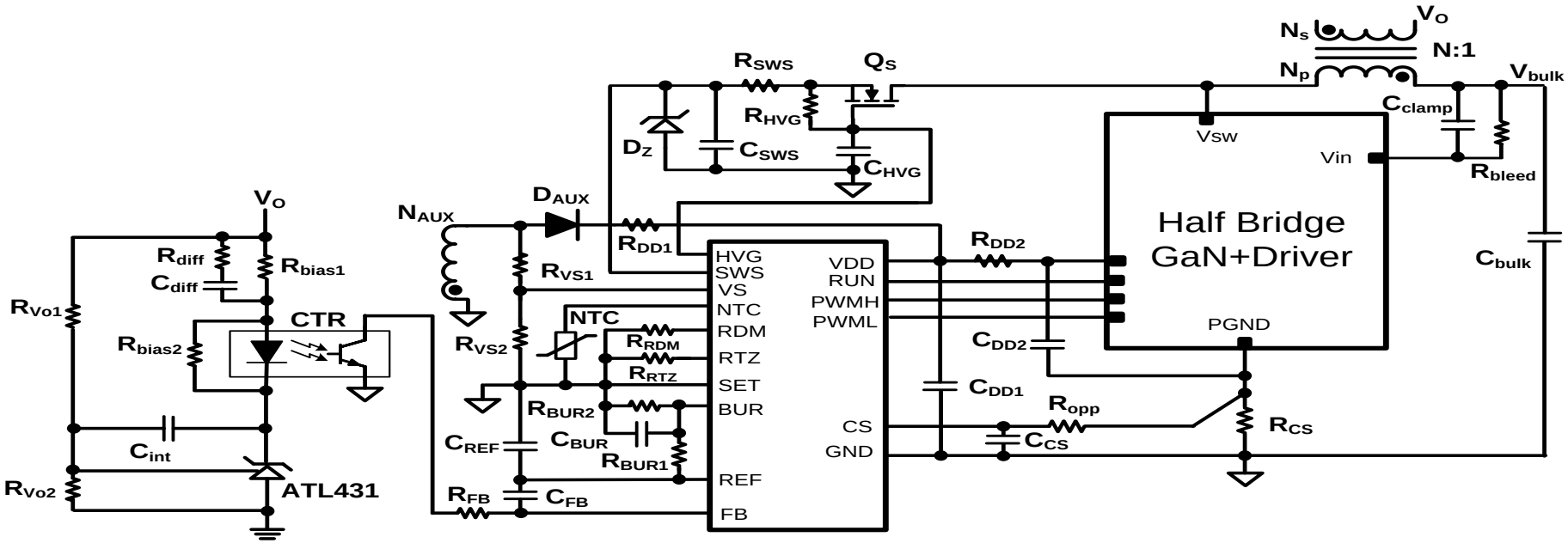

Texas Instruments

Simplified Schematic with SJ Silicon FETs

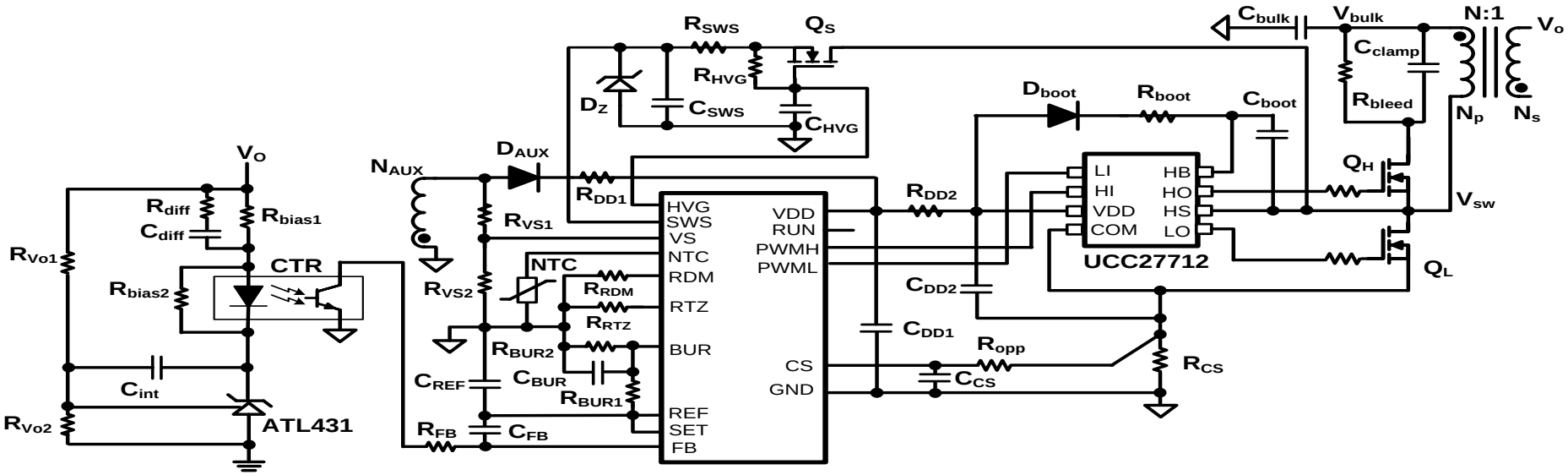

Texas Instruments

Kelvin Connection to Low-Side Gate

Common ground

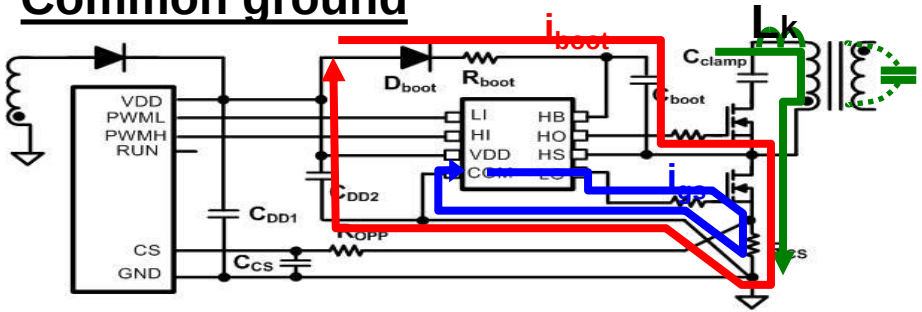

R_{CS} can see everything!!

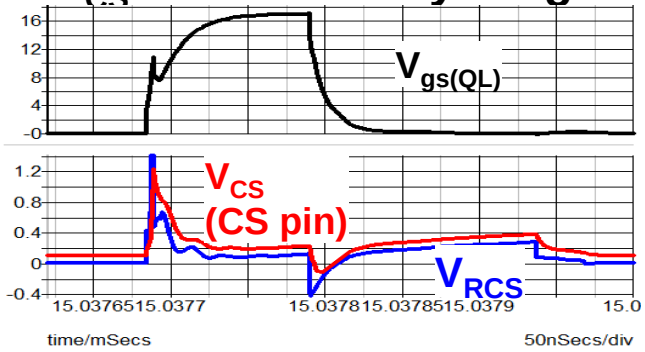

- Noisier current sense
- Higher voltage stress on CS pin

Kelvin Connect

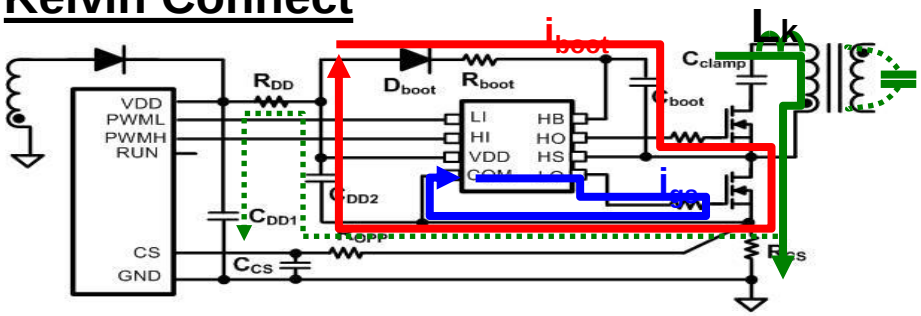

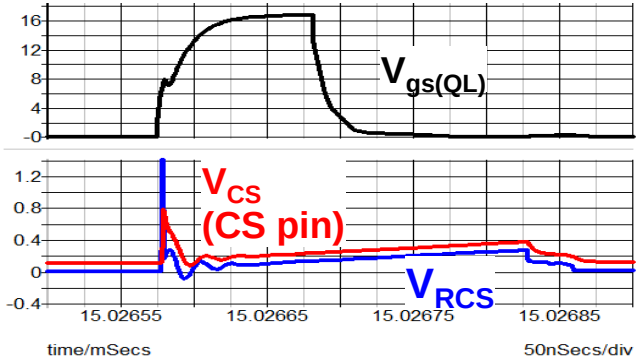

- i_{boot} and i_{gs} are decoupled from R_{CS}

Texas Instruments

Issues of DCM Flyback + Passive Clamp

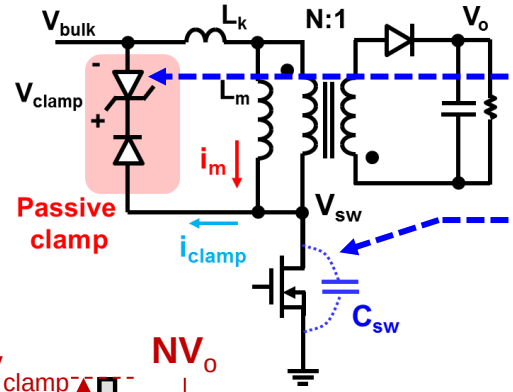

Clamp Loss: $P_{clamp} = \frac{V_{clamp}}{V_{clamp} - NV_o} \frac{1}{2} L_k i_{m(+)}{}^2 f_{sw}$

Switching Loss: $P_{Switching} \approx \frac{1}{2} C_{sw} V_{bulk}{}^2 f_{sw}$

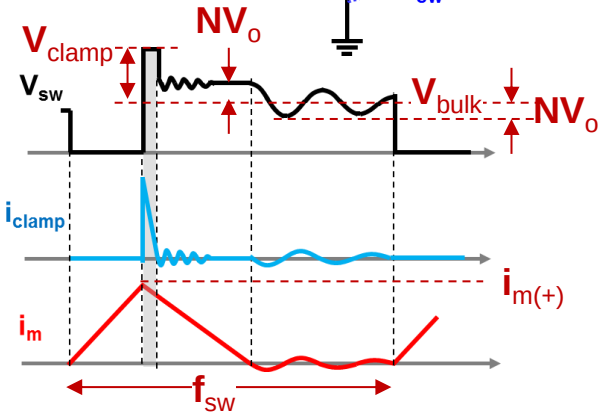

RM6 XFMR (N=3.25, L_k=3uH), 650V/650mΩ Silicon FET
V_{clamp}=130V, 20V/30W, V_{bulk}=230√2V

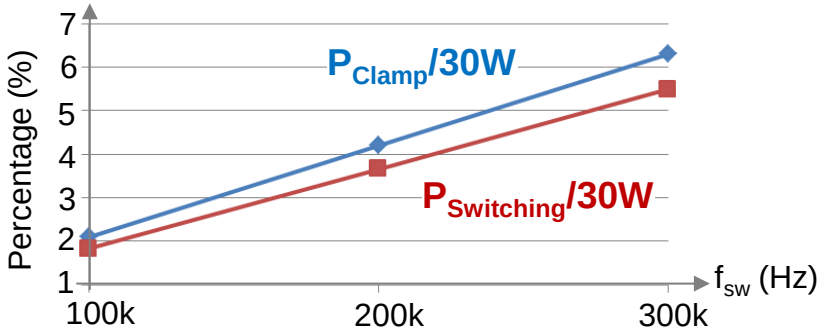

Transition Mode (TM) + Active Clamp

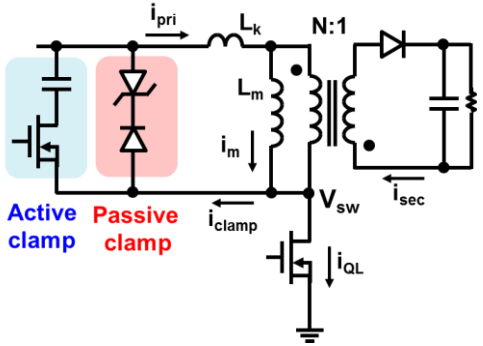

	P_{Clamp}	$P_{Switching}$	P_{Core}	$P_{Winding}$
A	High	Higher	Higher	Mid
B	High	Mid	Lower	Lower
C	≈0 (to output)	≈0 (ZVS)	Middle	Higher

Due to higher $i_{m(-)}$ and i_{clamp}

(A) Passive-clamp + DCM **(B) Passive-clamp + TM** **(C) Active-clamp + TM**

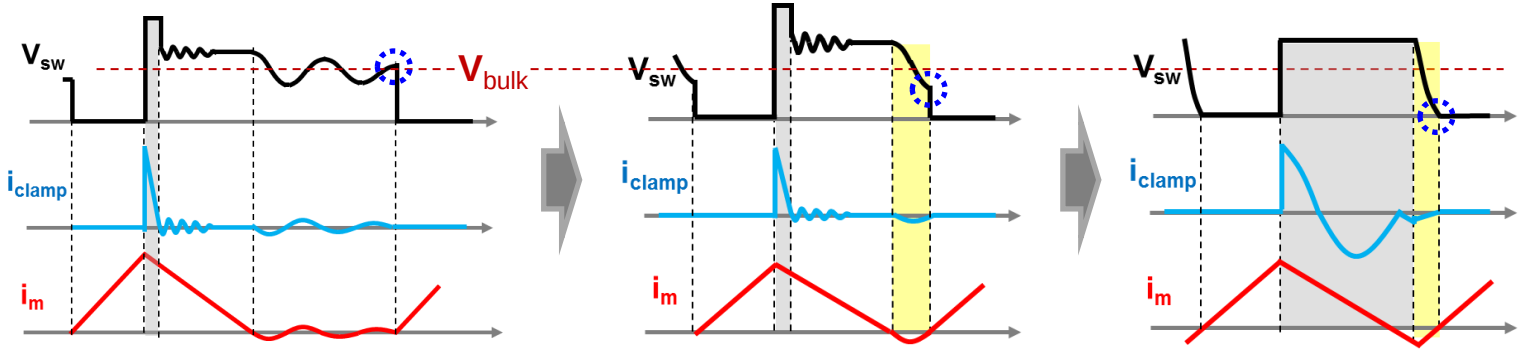

QR vs. ACF Operation Waveforms Comparison

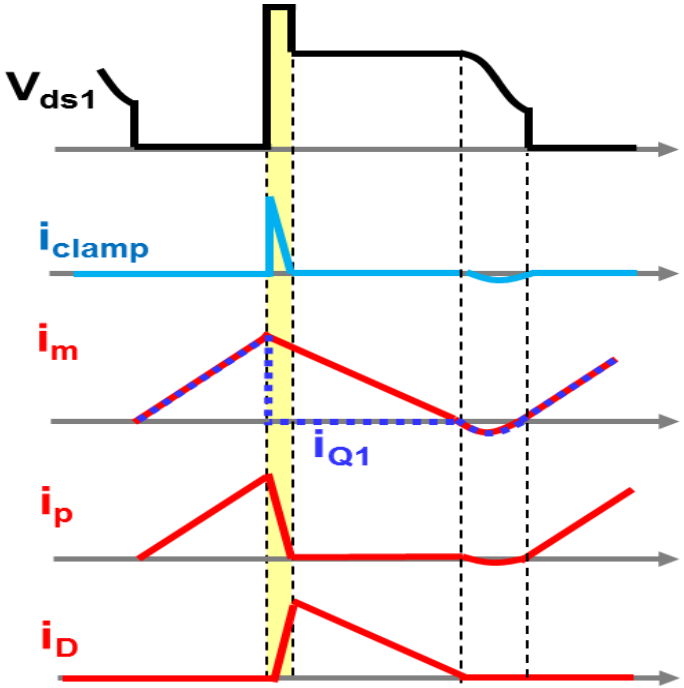

QR Flyback

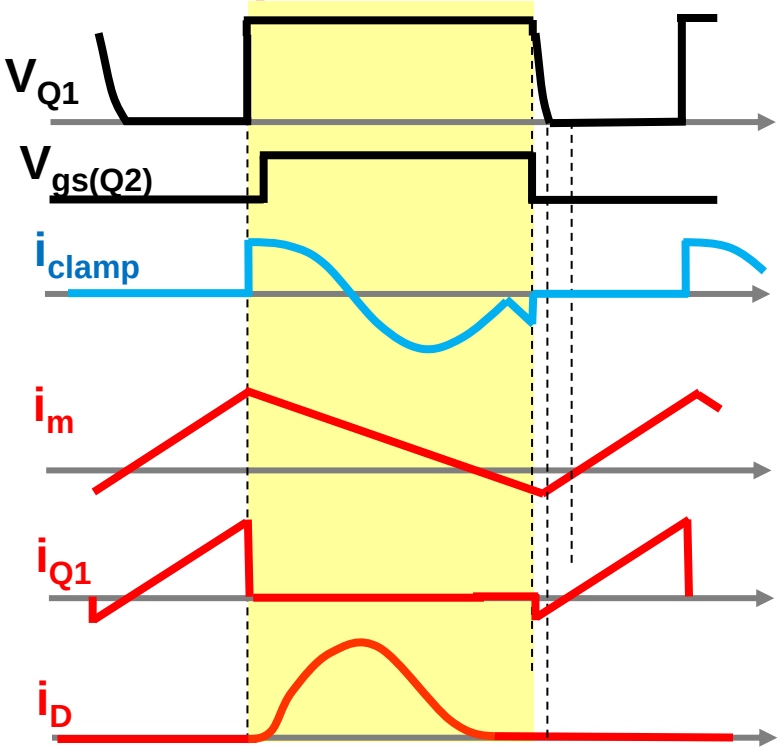

ACF Flyback

Texas Instruments

Comparison Between ACF & QR Flyback

	ACF	QR Flyback
Magnetizing Inductor Current at heavy load	DCM/CCM boundary	DCM/CCM Boundary
Input current	Triangular	Triangular
Transformer primary side current	Continuous	Discontinuous
Transformer secondary side current	Sinusoidal	Triangular
Transformer leakage energy	Recycle through clamp switch	Dissipated in clamp circuit
Turn on loss	ZVS	ZVS for low line/QR for high line
Turn off loss	Self snubber	Self snubber
DM EMI	About the same if the switching frequency is the same	
CM EMI	Low because of no ringing and soft switching	High
Potential of high frequency	Yes	No

Active Clamp Flyback (ACF) Operation

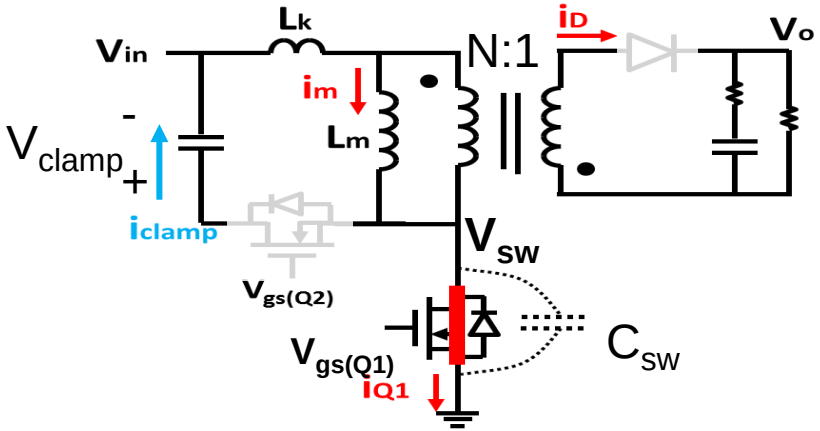

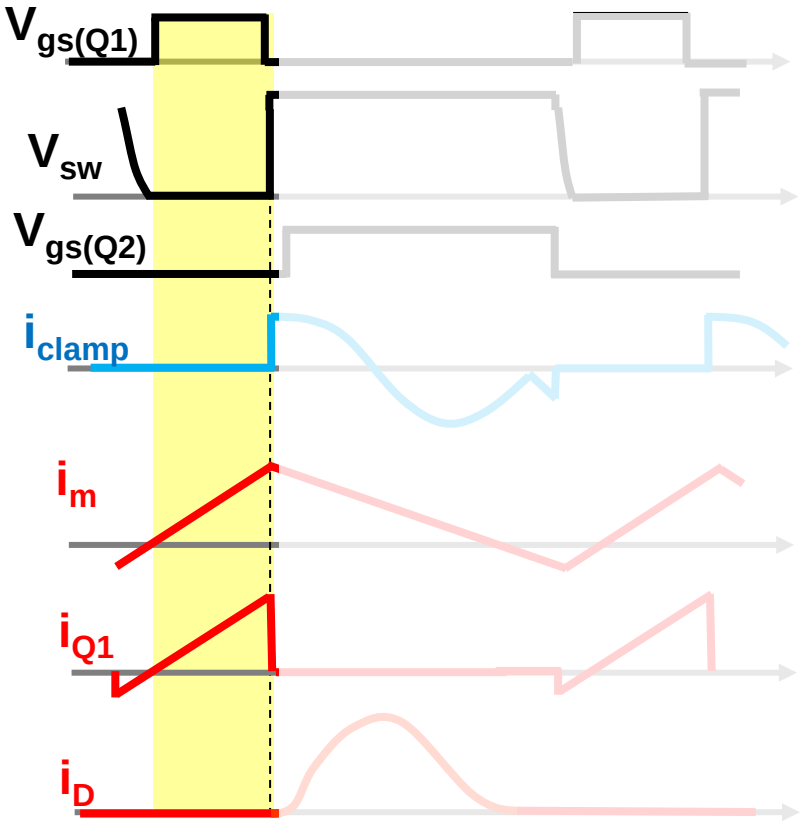

- $V_{gs(Q1)}$ turns on, when V_{sw} reaches zero
- Q_2 voltage stress ≈ V_{in} + V_{clamp}

  Note: V_{clamp} is close to $N*(V_o+V_D)$
- V_D voltage stress ≈ $V_{in}/N+ V_o$

Texas Instruments

Active Clamp Flyback (ACF) Operation

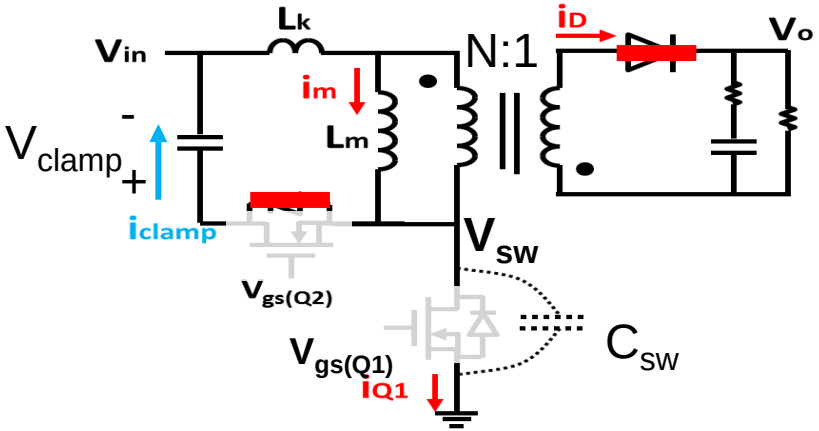

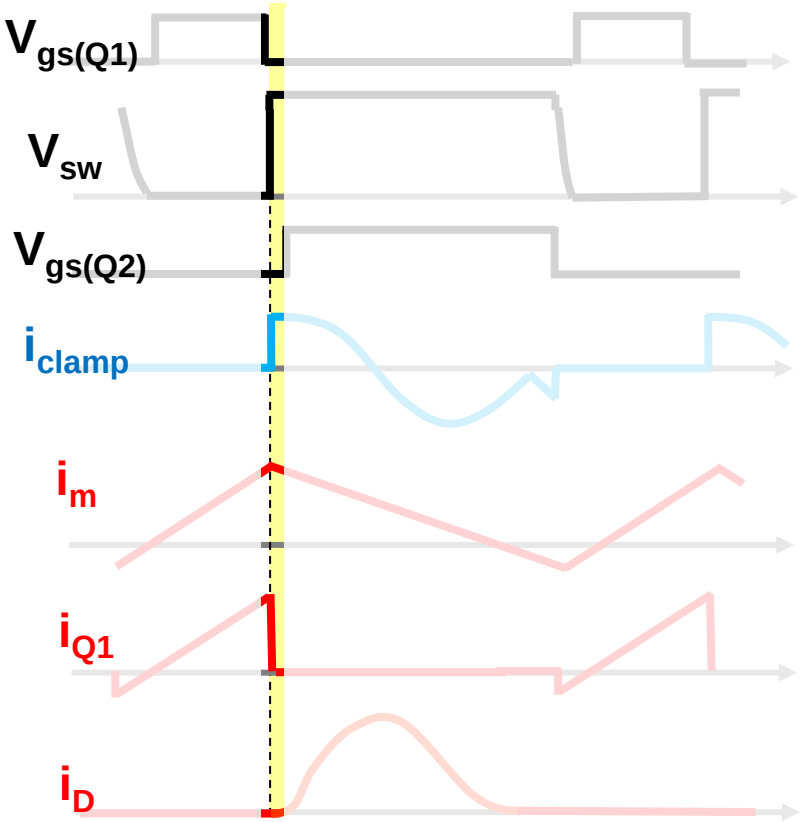

- $V_{gs(Q1)}$ turns off, when i_{Q1} reaches to max.
- L_K current forces Q_2 body diode conduction, so L_K and C_{calmp} start to resonant
- $i_D = (i_m - i_{clamp})/N$
- Q_1 voltage stress ≈ $V_{in} + V_{clamp}$

  Note: V_{clamp} is close to $N*(V_o+V_D)$

Texas Instruments

Active Clamp Flyback (ACF) Operation

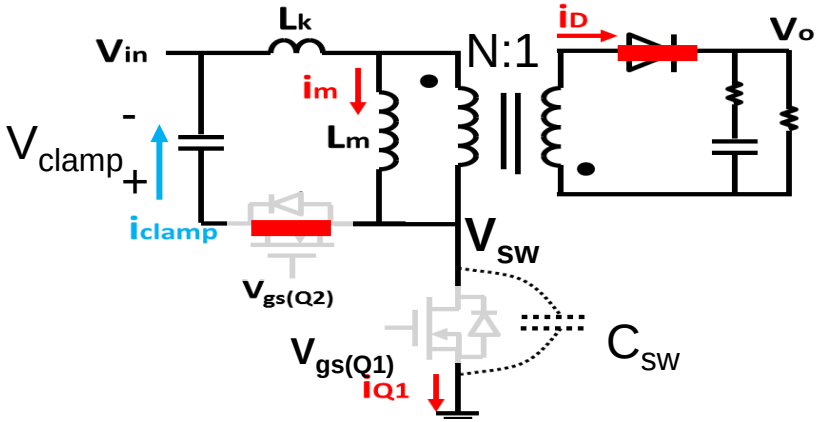

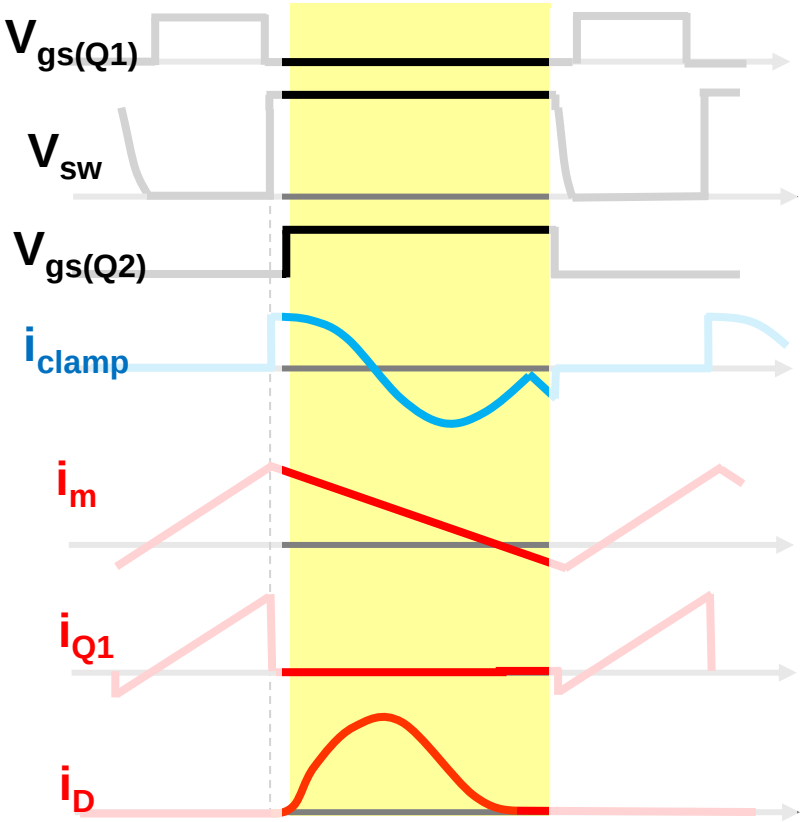

- $V_{gs(Q2)}$ turns on after fixed dead time
- During resonance, L_k energy is recycled
- During demagnetizing L_m, i_m can become negative, depending on the Q_2 on time.
- After resonance finishes (i_{clamp}=i_m), i_D goes to zero again, and then diode will turn off.

Texas Instruments

Active Clamp Flyback (ACF) Operation

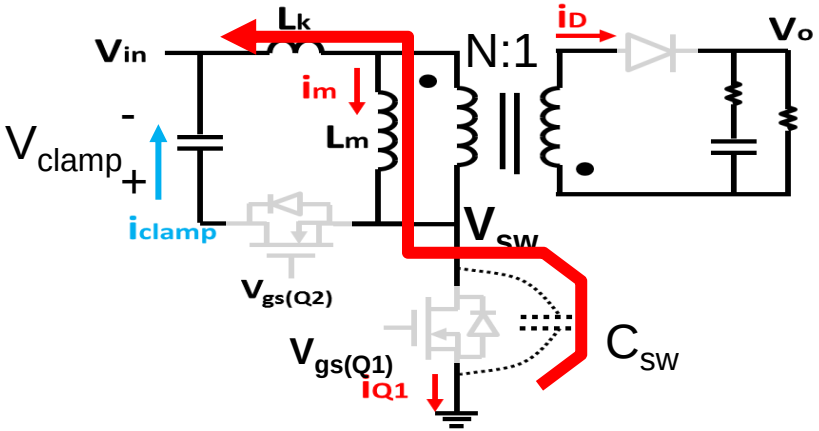

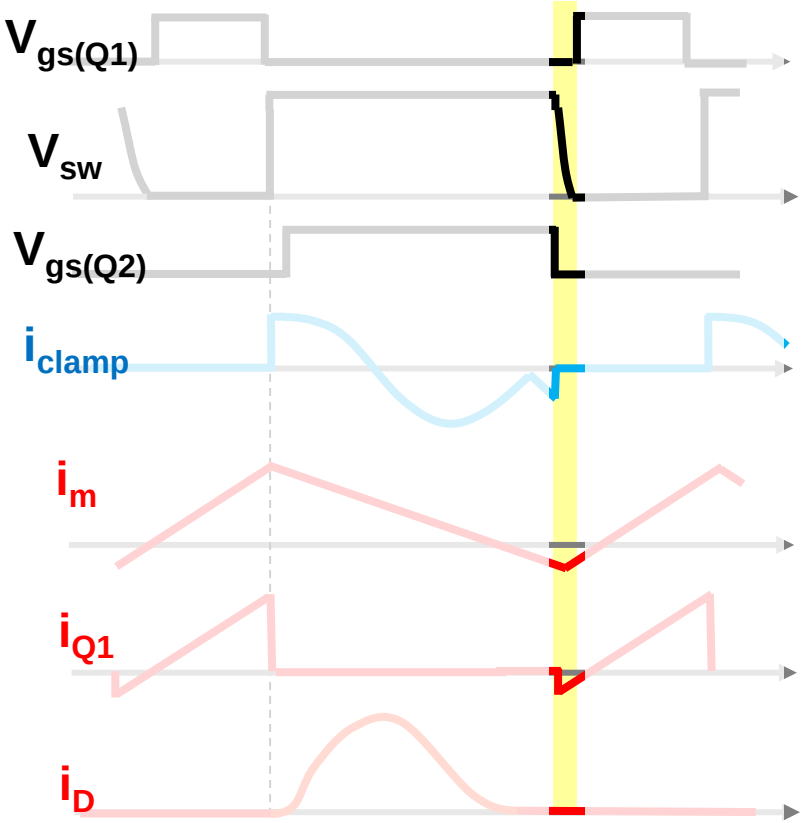

- When $V_{gs(Q2)}$ turns off, negative current of i_m will discharge C_{sw} voltage.
- After C_{sw} is fully discharged, the body diode will conduct.
- After $V_{gs(Q1)}$ turns on, another repetitive cycle begins.

Texas Instruments

UCC28780 Control Law : AAM

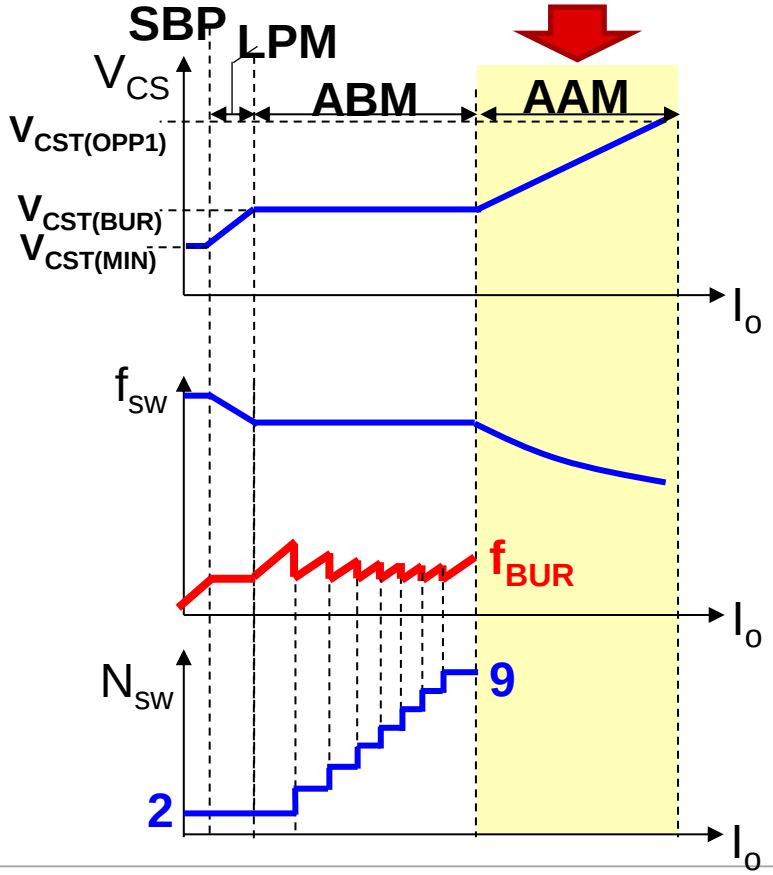

➢ Adaptive Amplitude Modulation:

- Relevant spec:

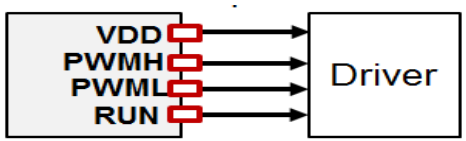

$V_{CST(OPP1)}$	High level	Low level	T_{rise}/T_{fall}
0.6	4.4V (Min)	0.5V (Max)	10ns (with 10pF)

- Modulation: variable-frequency AM+ZVS

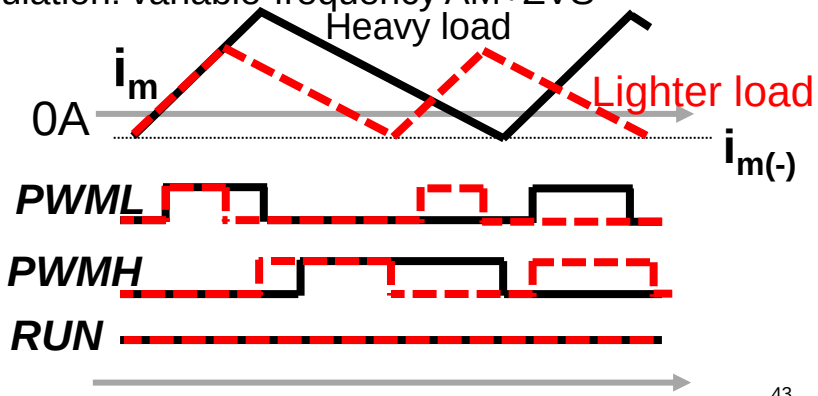

Texas Instruments

UCC28780 Control Law : ABM

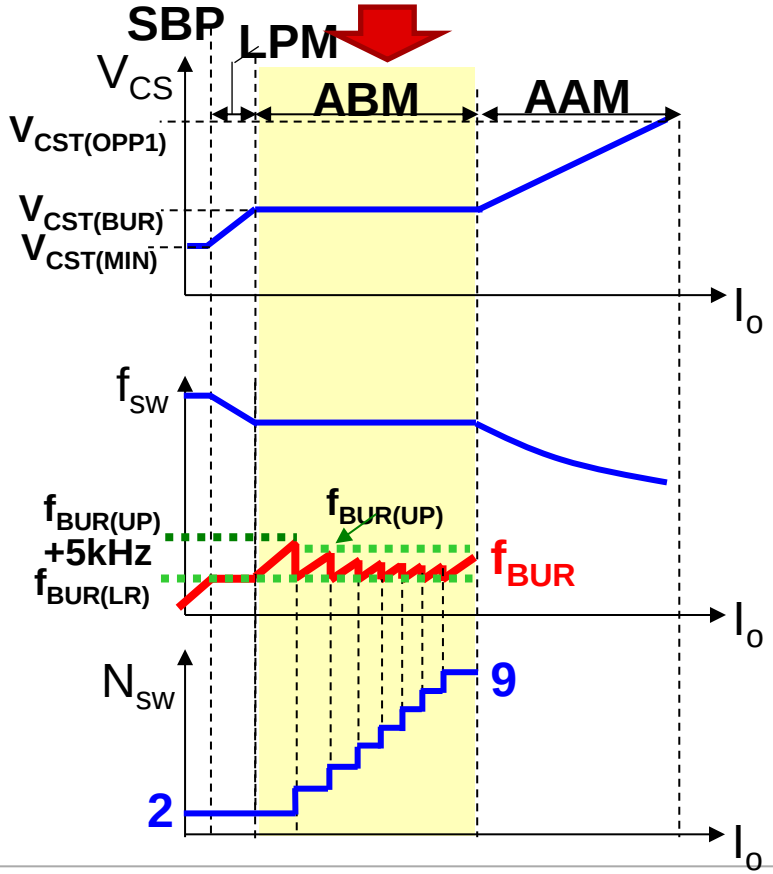

➢ Adaptive Burst Mode (ABM):

- Relevant spec:

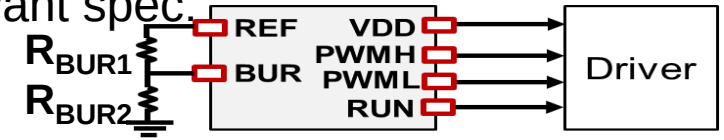

$K_{BUR-CST}$	$f_{BUR(UP)}$	$f_{BUR(LR)}$	$T_{D(RUN-PWML)}$	T_{LEB}
4	35kHz	25kHz	2.2~4.4us	200ns (V_{SET}=V_{REF}) 130ns (V_{SET}=GND)

- Modulation: keep f_{BUR}≥25kHz by adjusting N_{SW}

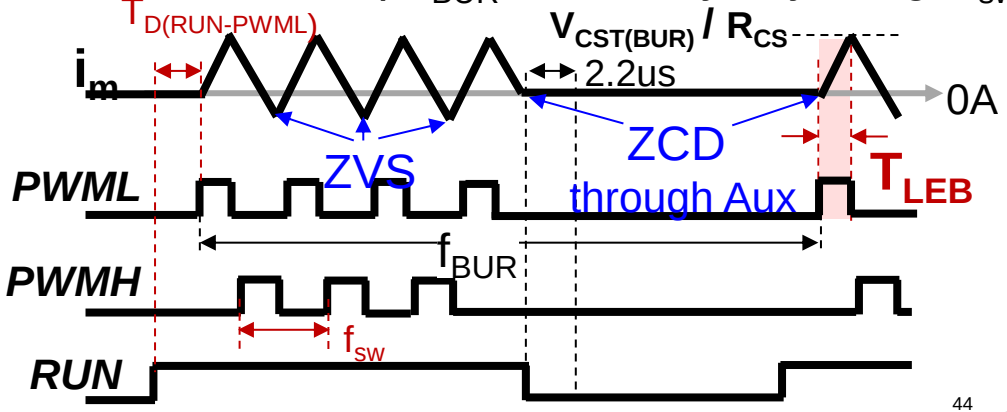

Texas Instruments

UCC28780 Control Law : LPM

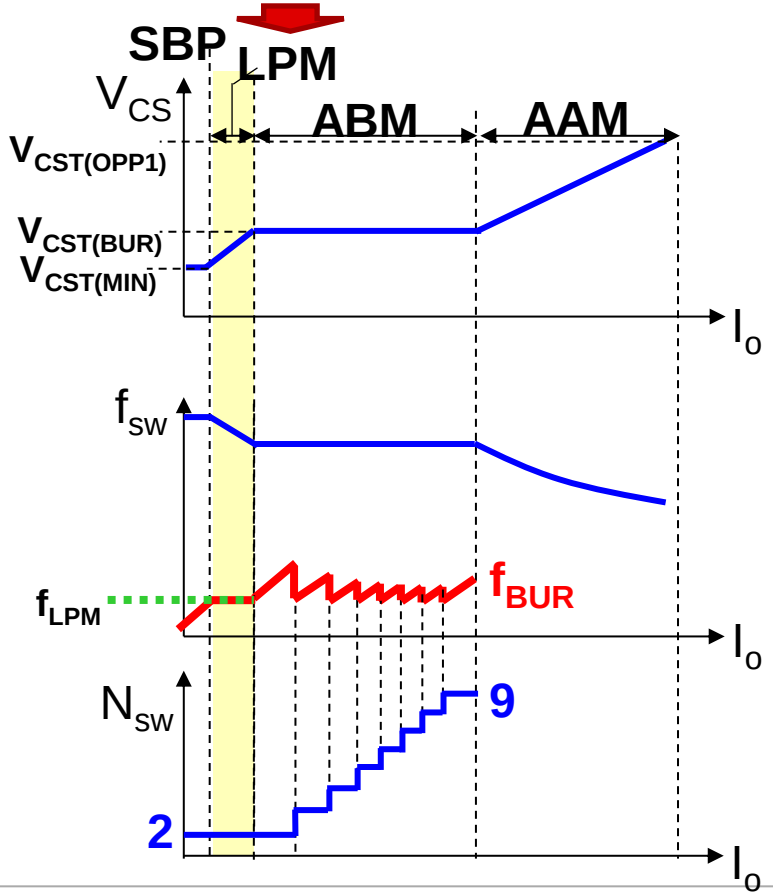

➢ **Low Power Mode (LPM):**

- Relevant spec:

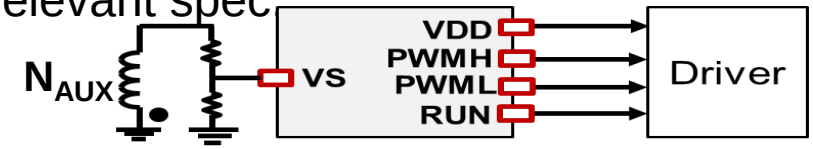

$V_{CST(MIN)}$	f_{LPM}	V_{ZCD}	$T_{on(min)}$ (=T_{LEB}/2)
0.15V	25kHz	30mV (VS pin)	100ns (V_{SET}=V_{REF}) 65ns (V_{SET}=GND)

- Modulation: Fixed-frequency burst mode in AM

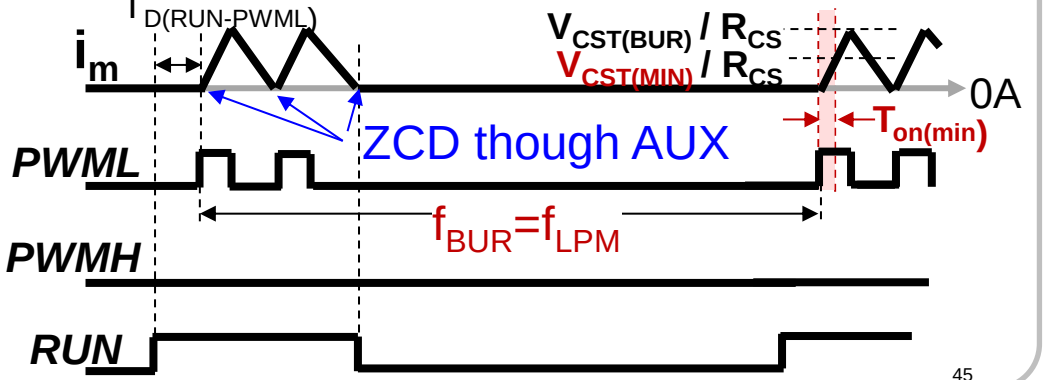

Texas Instruments

UCC28780 Control Law : SBP

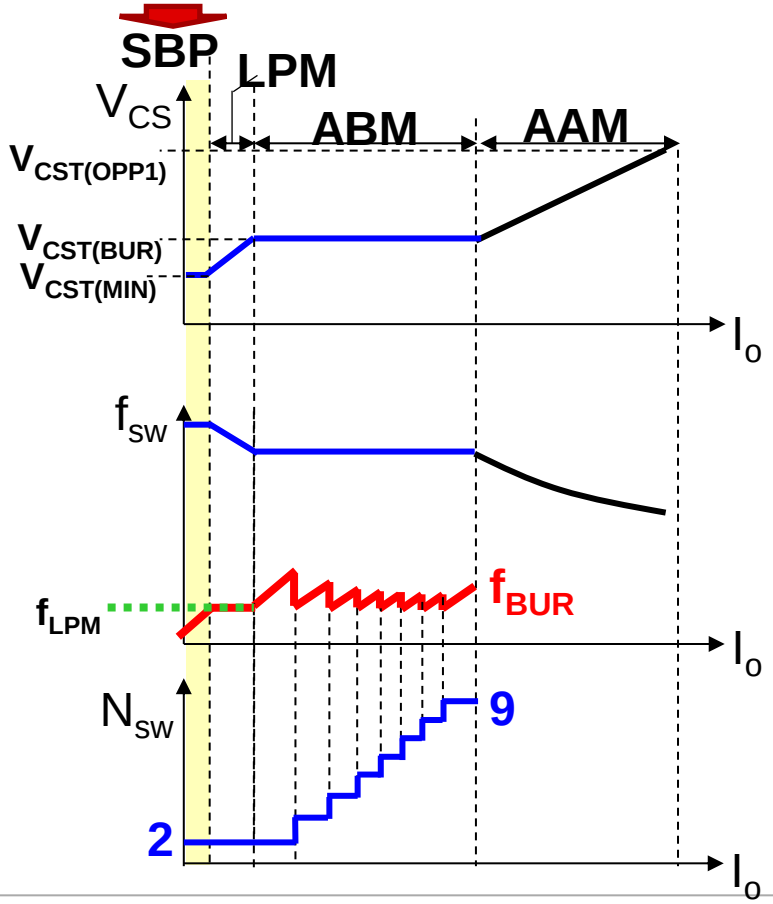

➢ **Standby Power Mode (SBP):**

- Relevant spec:

i_{RUN} (for VDD pin)	i_{WAIT} (for VDD pin)	$i_{FB(SBP)}$ (for FB pin)
3mA	400uA	60uA

- Modulation: Variable-frequency burst in FM

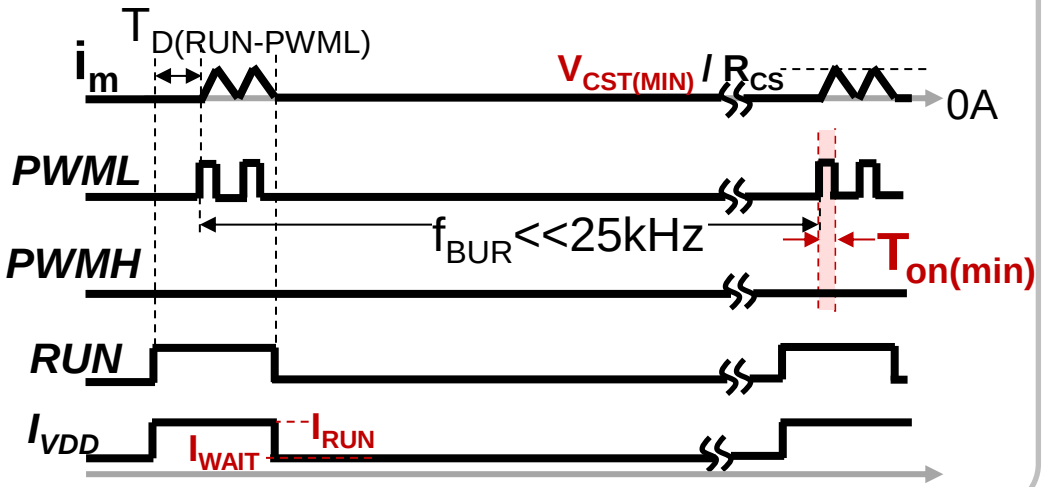

Texas Instruments

Feasibility of Safety-rated High Frequency Transformer

Method 1: Triple insulated Litz

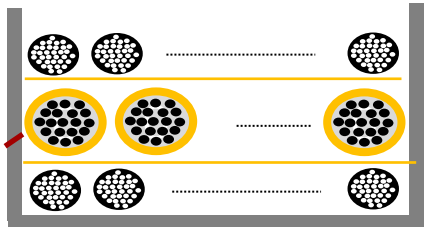

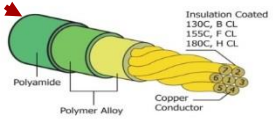

RUBADUEWIRE

PACK LitzWire

FURUKAWA ELECTRIC

TOTOKU

Method 2: Bobbin with Spacer

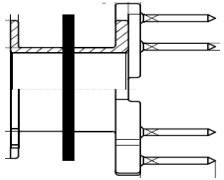

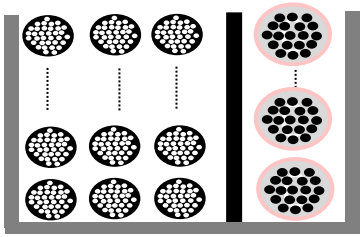

(65W design with Litz wire)

There is no issue on implementing a safety-rated Litz transformer.

Core Material of Transformer for High Frequency Operation

- **Performance Factor (f_{sw}*B_{max})**

Condition: same core loss (500mW/cm³)

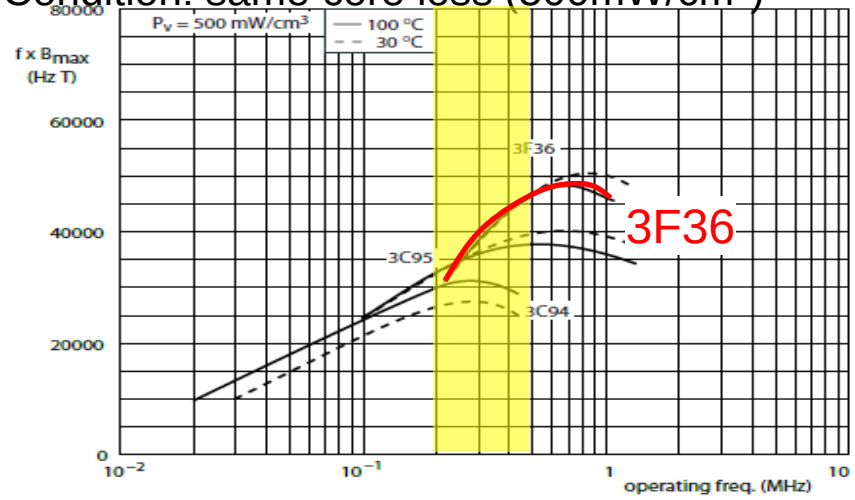

3F36 , N49 (used in EVM) good materials for HF XFMR

B_{max} Consideration: Core loss limited in high f_{sw}; Saturation limited in Low f_{sw}

- **Core loss to temperature change**

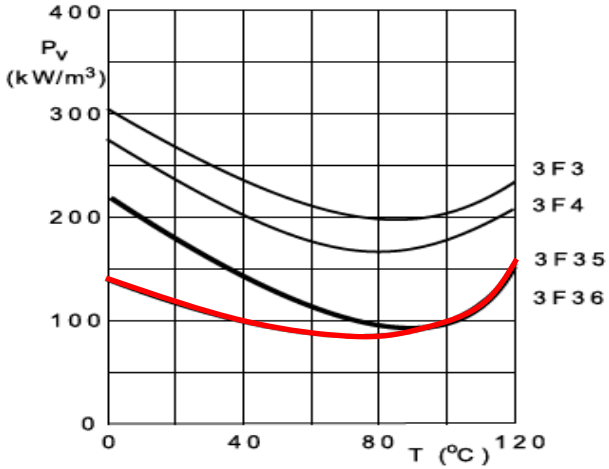

Transformer for 45W Adapter

Transformer Specifications at 25°C

PARAMETER	VALUE	PINS/LEADS	TEST CONDITIONS
Inductance (μH)	104 to 127	P1 – P2	Open all other pins
Leakage Inductance (μH)	2.5 Max.	P1 – P2	Tie S1 - S2, 0.1 V, 200 kHz
D.C. resistance (Ω)	0.147 Max.	P1 – P2	
D.C. resistance (Ω)	0.014 Max.	S1 – S2	
D.C. resistance (Ω)	0.16 Max.	Pa1 – Pa2	
D.C. resistance (Ω)	0.168 Max.	Sa1 – Sa2	
Turns ratio	1:0.19:0.14:0.1	(P1-P2):(S1-S2):(Pa1-Pa2):(Sa1-Sa2)	

Core type:

RM8ILP

Core material:

N49

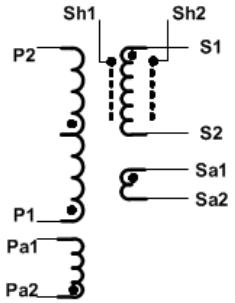

Winding structure:

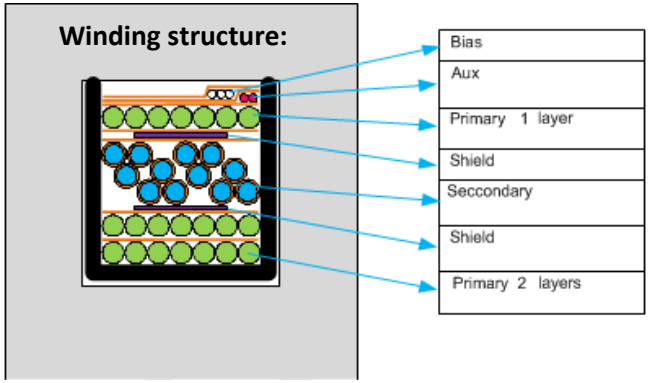

Winding	Start	Finish	Turns
Inner primary 1	P1	Tap1	7
Tape			1
Inner primary 2	Tap1	Tap2	7
Tape			1
Cu shield	Sh1		1
Tape			1
Secondary	S1	S2	4
Tape			1
Cu Shield	Sh2		1
Tape			1
Outer primary	Tap2	P2	7
Tape			1
Aux	Sa1	Sa2	2
Tape			1
Bias aux	Pa1	Pa2	3
Tape			2

Texas Instruments

REVISIONS				
ECO #	REV	DESCRIPTION	DATE	APPROVED
	P01	PRELIMINARY-PART & DWG ARE PROTO	6-2-17	D.SCHILLER
-	A	RELEASED	1-24-18	R.S.

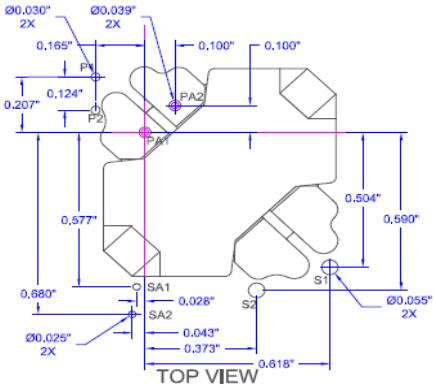

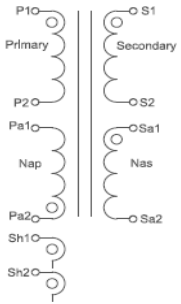

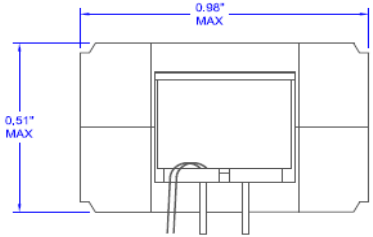

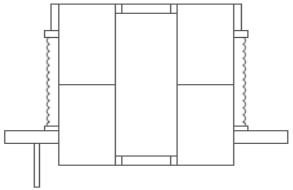

Electrical Specification at +25C unless noted otherwise	
Parameters	**Value / Test Conditions**
Inductance	P1-P2 = 104-127uH @ 200KHz, 0.1VAC
Leakage Ind.	Tests Pins P1-P2 Short pins S1-S2 = 2.6uH max @ 200KHz, 0.1VAC
DCR @ 20°C	P1-P2 = 0.147 Ohms max; S1-S2 = 0.014 Ohms max; Pa1(4)-Pa2(9) = 0.188 Ohms max; Sa1-Sa2 = 0.188 Ohms max
Dielectric	1500VAC, 60Hz, 1mA, 1s,P1-S1 500VAC, 60Hz, 1mA, 1s, P1,S1-CORE
Turns Ratio	(P1-P2):(S1-S2):(Pa1-Pa2):(Sa1-Sa2)=1:0.19:0.14:0.1

DESC. TRANSFORMER, FLYBACK, 45W.

SIZE	FILE CODE	PART NO.	REV
A	-	019-8916-00R	A

SCALE		SHEET
NONE	CW7319 REV B APPROVER DON SCHILLER	1 OF 1

ENGR: R.S.
DATE: 1-23-18
DWN BY: D. SCHILLER
DATE: 6-2-17

RoHS Pb

PRECISION INCORPORATED
1700 Freeway Blvd.
Minneapolis, MN 55430
763-561-6880 Fax: 763-561-9050

Texas Instruments

Audible noise reduction: ABM➡AAM

Nsw higher than 9 for a smoother mode transition

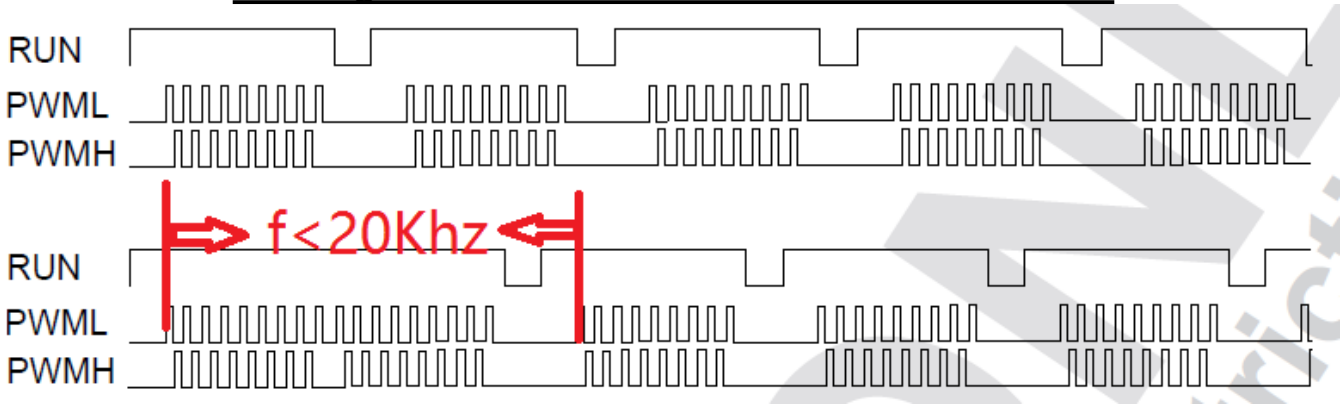

Solutions for white noise reduction:

- **Transformer dip varnishing**
- **Lower peak magnetizing current – Minor decrease of V_{BUR}**
- **Other source of noise – MLCC capacitors of Cclamp or Sec._Reson. Caps**
  *** Parallel caps to reduce noise**
- **Improve ABM loop stability– narrow i_{FB} range (enlarge Rbias1)**

Texas Instruments

Conducted EMI of ACF

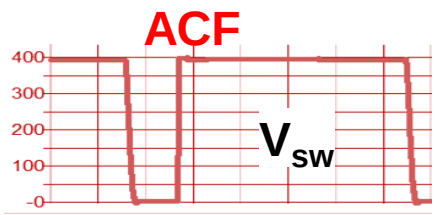

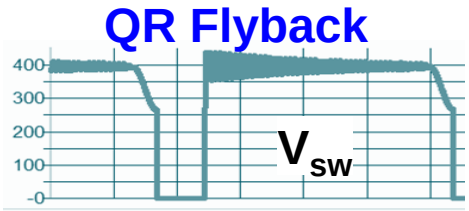

- **Simulation on CM current spectrum**

Condition: Vin=325V, Vo=20V, Po=30W,

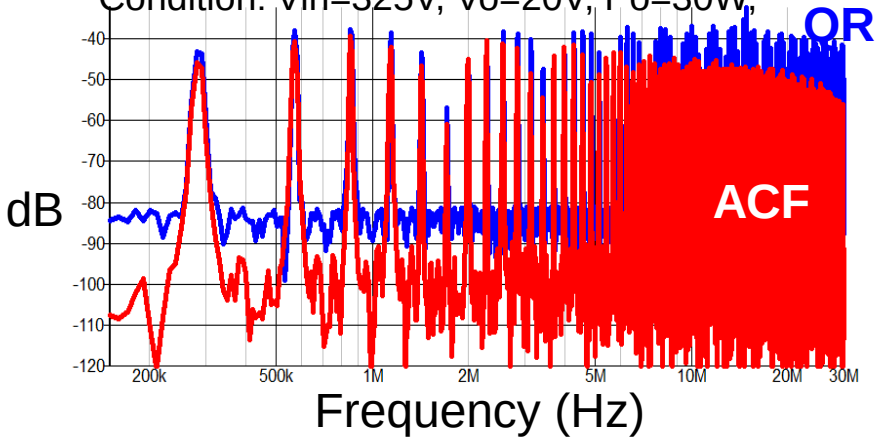

Soft switching of ACF mainly reduces CM noise in high frequency

Conducted EMI of Production ACF: 14W/in^3 (cased) High Density 65W Adapter

Spec: EN55022, (brown) Class B Pk, (blue) Class B Avg
Connection: Secondary ground to earth ground

- **Measurement at 115Vac, 65W**

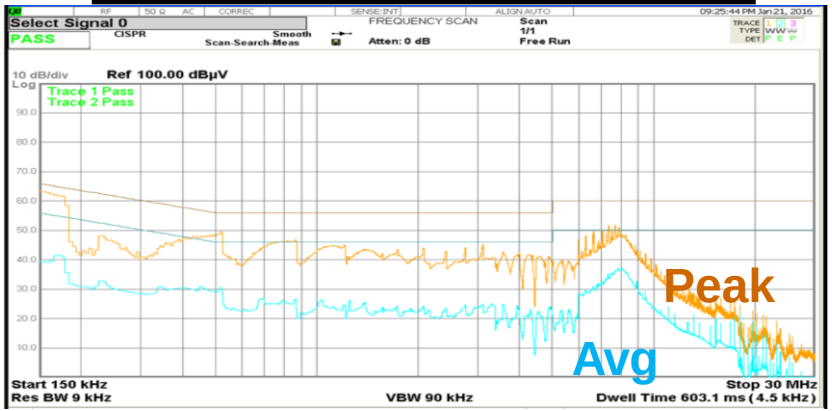

- **Measurement at 230Vac, 65W**

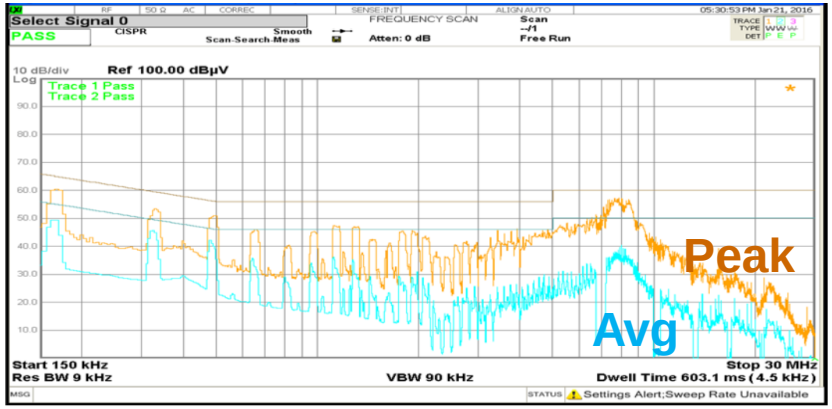

The test result shows ACF can pass EMI confidently for a High Density 65W adapter with proper transformer construction and EMI filter design.

Texas Instruments

Thank you!

Questions?

© Copyright 2018 Texas Instruments Incorporated. All rights reserved.

This material is provided strictly “as-is,” for informational purposes only, and without any warranty.
Use of this material is subject to TI’s **Terms of Use**, viewable at TI.com