UNLESS OTHERWISE SPECIFIED, ALL NOTES ARE APPLICABLE.
NOTES PRECEDED BY AN UNMARKED "☐" ARE NOT APPLICABLE.

1. APPLICATION DESIGN MANUFACTURING AND INSPECTION DOCUMENTS.
   IPC-2221A & IPC-2222 / DESIGN STANDARD FOR RIGID PRINTED CIRCUIT BOARDS AND RIGID PRINTED BOARD ASSEMBLIES.
   IPC-6012B / QUALIFICATION AND PERFORMANCE SPECIFICATION FOR RIGID PRINTED BOARD.
   IPC-A-600G / ACCEPTABILITY OF PRINTED BOARDS.
2. HOLE SIZE APPLIES AFTER PLATING. TOLERANCE TO BE +/-.003.
3. REGISTRATION TOLERANCE: ARTWORK +/-.002
   ALL HOLE CENTERS +/-.005 FROM DIMENSION DATUM.
4. MINIMUM COPPER WALL THICKNESS SHALL BE .001 INCH. FOR ALL PLATED THROUGH HOLES. BREAKOUT NOT ALLOWED.
5. PROCESS AND MATERIAL MUST CONFORM TO UL 796. MATERIAL MUST MEET OR EXCEED UL FLAMMABILITY RATING 94V-0.
   MATERIAL: ☐ SINGLE SIDED, ☐ DOUBLE SIDED, ☒ MULTI-LAYER (SEE DETAIL "A")
   SEE LAYER STACKUP FOR ALL PRE-PREG & CORE THICKNESSES, COPPER OZ AND MATERIAL. FINISHED BOARD THICKNESS: 0.085 +/-10%
6. MANUFACTURE'S UL MARKING, FLAMMABLILITY RATING, LOGO AND DATE CODE TO BE PLACED IN SILKSCREEN ON BOTTOM SIDE OF THE BOARD.
7. SOLDERMASK BOTH SIDES USING TAIYO (OR EQUIVALENT). COLOR=RED (0.001 TO 0.002" THICK OVER METAL).
8. SILKSCREEN ☐ TOP SIDE ☒ BOTH SIDES. USING ☐ YELLOW ☒ WHITE NPI LEADFREE. REGISTRATION TOLERANCE TO BE +/-.005. INK IS NOT ALLOWED ON EXPOSED PLATED AREA.
9. P.C. BOARD TO BE FREE OF DIRT, OIL, FINGER PRINTS, ETC.
10. BOARD WARPAGE: WARP AND TWIST SHALL NOT EXCEED .007 INCH PER INCH. MEASURED AT ANY LOCATION OR DIRECTION ON THE BOARD.
11. BOARD MUST BE 100% ELECTRICALLY TESTED TO ENSURE NO SHORTS OR OPEN CIRCUITS AT 20V.
12. ALL INNER LAYER UNCONNECTED PADS SHALL BE REMOVED.
13. OUTER LAYERS USING A 5.7 mil TRACE WIDTH SHALL BE 50ohms SINGLE ENDED, +/- 10% TOLERANCE.
    INNER LAYERS USING A 4.2 mil TRACE WIDTH SHALL BE 50ohms SINGLE ENDED, +/- 10% TOLERANCE.
    OUTER LAYERS USING A 4.0 mil TRACE WIDTH AND 6.0 mil SPACING SHALL BE 100 ohms DIFFERENTIAL, +/- 10% TOLERANCE.
    INNER LAYERS USING A 3.6 mil TRACE WIDTH AND 6.4 mil SPACING SHALL BE 100 ohms DIFFERENTIAL, +/- 10% TOLERANCE.
14. MINIMUM COPPER CONDUCTOR WIDTH IS: 3.5 MIL.
    MINIMUM COPPER SPACING IS: 4 MIL.
15. SMOBC/IMMERSION GOLD: 3-8 uIN OVER 100-200 uIN NICKEL PLATING.
16. GROUND ETCH TO BOARD EDGE IS INTENTIONAL. DO NOT PULL BACK.
17. NO CHANGES TO ANY ARTWORK ARE PERMITTED WITHOUT WRITTEN AUTHORIZATION.
18. FINISHED BOARD MUST BE RoHS COMPLIANT AND SURVIVE A LEAD FREE ASSEMBLY, MAXIMUM REFLOW OF 260 DEGREES C (6 PASSES).
19. FILL ALL VIAS USING NON CONDUCTIVE MATERIAL; FILL VIAS TO BE POLISHED FLAT, NO POT HOLES.

REVISIONS

ZONE	LTR	DESCRIPTION	DATE	APPROVED

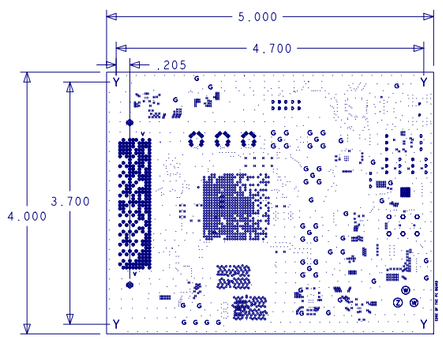

DRILL CHART: TOP to BOTTOM
ALL UNITS ARE IN MILS

FIGURE	SIZE	PLATED	QTY
•	6.0	PLATED	31
·	8.0	PLATED	16
•	8.0	PLATED	684
·	8.0	PLATED	27
•	10.0	PLATED	245
·	10.0	PLATED	9
·	10.0	PLATED	962
•	12.0	PLATED	350
•	12.008	PLATED	25
◆	15.0	PLATED	24
•	38.0	PLATED	31
○	55.0	PLATED	6
G	62.0	PLATED	31
G	67.0	PLATED	20
◆	106.0	PLATED	2
⑩	120.0	PLATED	2
⑦	140.0	PLATED	1
•	35.0	NON-PLATED	2
▽	50.0	NON-PLATED	2
Y	125.0	NON-PLATED	4

DETAIL "A"

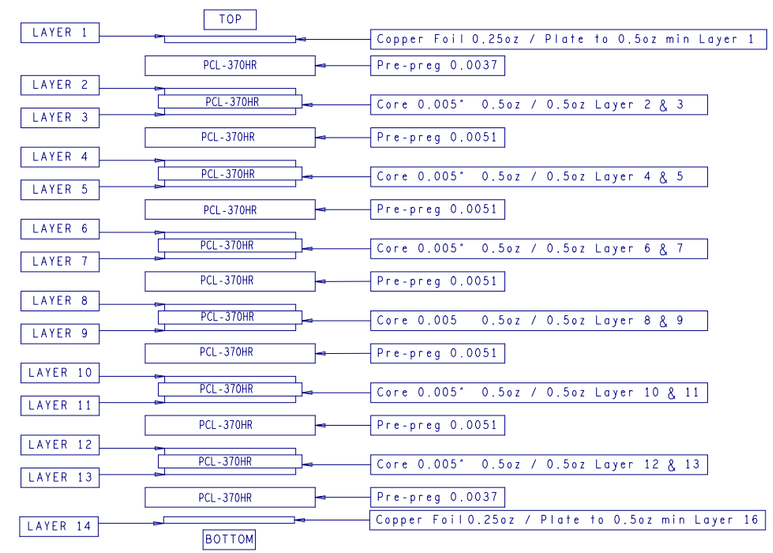

UNLESS OTHERWISE SPECIFIED
DIMENSIONS ARE IN INCHES
TOLERANCES ARE:
FRACTIONS +/- DECIMALS .XX +/-.01 .XXX +/-.005 ANGLES +/-

MATERIAL
SEE NOTE 5

FINISH
SEE NOTES 7, 8, 9

DO NOT SCALE DRAWING

CONTRACT NO.

APPROVALS	DATE
DRAWN L. NGUYEN	04/02/14
ENGR E. DMOBENG/J. SETON	

TEXAS INSTRUMENTS INC.

FABRICATION DRAWING

TSW14J50EVM

SIZE	CODE IDENT NO.	DRAWING NO.	REV.
B			B

SCALE NONE SHEET 1 OF 1