TI Solution for Media Gateways

Tech Day Kiev

Agenda

- Introduction
- TI Processor offering
  - Low end
  - Mid range
  - High End
  - Voice attach for data centric Applications
- Other TI devices needed for this type of application
- TI SW offering
- TI partners
- Q&A
- C6472 demo

Introduction

- No question, the world is going IP. Consequently there is a Gateway needed to bridge between the analog phone and the IP world.
- This Gateway can be placed at different locations in the network
  - In the home
  - In the enterprise
  - In the central office
- All these equipments have special needs and vary also due to the actual transmission standard used.
- The examples provided here are mainly for TDM to IP applications but the general concept applies for other Gateway functions as well.
- Nevertheless we will try to give you an overview at which TI devices you should look for a given End Equipment.

Agenda

- Introduction
- TI Processor offering
  - Low end
  - Mid range
  - High End
  - Voice attach for data centric Applications
- Other TI devices needed for this type of application
- TI SW offering
- TI partners
- Q&A
- C6472 demo

TI: Largest Portfolio of Embedded Processors

TI Embedded Processors

Microcontrollers (MCUs)		ARM®-Based Processors			Digital Signal Processors (DSPs)	
16-bit ultra-low power MCUs	32-bit real-time MCUs	32-bit ARM Cortex™-M3 MCUs	ARM9/ARM Cortex-A8 MPUs	Application-specific processors	Low-power DSPs (*fixed-point*)	High-perf & multicore DSPs (*fixed & floating-point*)
MSP430	C2000™ Delfino™ Piccolo™	Stellaris®	Sitara™	DaVinci™ video processors OMAP™ mobile application processors	C5000™	C6000™

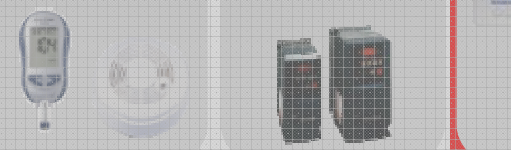

Software & Dev. Tools

MPUs – Microprocessors HLOS – High-Level Operating System

Analog Attach

Agenda

- Introduction
- TI Processor offering
  - Low end
  - Mid range
  - High End
  - Voice attach for data centric Applications
- Other TI devices needed for this type of application
- TI SW offering
- TI partners
- Q&A
- C6472 demo

ATA: Analog Telephone Adapter

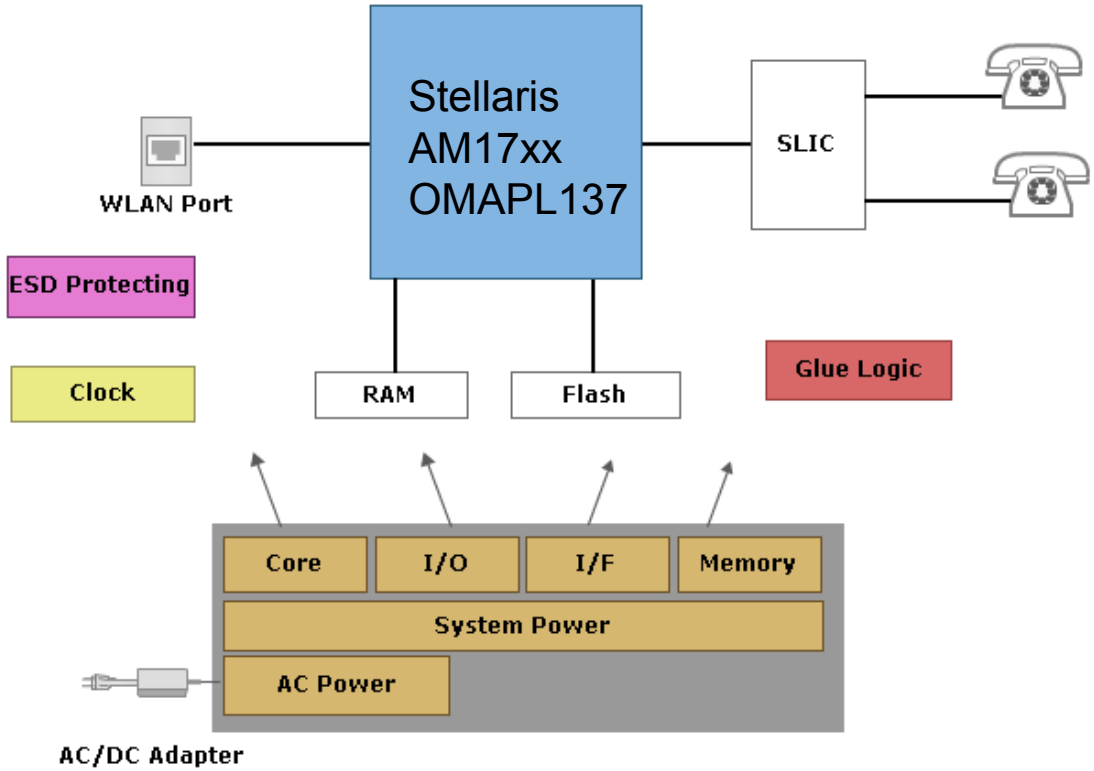

Product Characteristics	Recommended Device
Very low end	Cortex M3: Stellaris devices
Complex codec's	ARM 9: AM17xx, AM18xx
More channels	ARM9 +C64x: OMAPL137

Stellaris® M3 Generations

100, 300, 600, 800	Low pin count	20, 25, 50 MHz	8-64k Flash 2-8k SRAM	ADC, Temp, Comparators	28-pin SOIC, 48-pin LQFP	$1–$5
1000	High pin count	25, 50 MHz	64-256k Flash 16-64k SRAM	ADC, Comp, 4 GP Timers	64, 100 LQFP 108 BGA	$3–$6
2000	CAN devices	25, 50 MHz	64-256k Flash 16-64k SRAM	10-bit ADC, Low Cost, PWM	64-, 100-pin QFP, 108 BGA	$3–$7
3000	USB OTG or H/D	50 MHz	128k Flash 32-64k SRAM	10-bit ADC, PWM, DMA	64-, 100-pin QFP	$2–$5
5000	USB (OTG/H/D) and CAN	50 MHz	128k Flash 32-64k SRAM	USB (OTG or H/D), ADC	64-pin LQFP 100-pin LQFP	$3–$7
6000	ENET	25, 50 MHz	64-256k Flash 16-64k SRAM	ENET, PWM, ADC, QEI	100-pin LQFP 108-pin BGA	$2–$7
8000	CAN + ENET	50 MHz	96-256k Flash 32-64k SRAM	CAN MAC, ADC, Comp	100-pin LQFP 108-pin BGA	$3–$6
9000	USB + ENET +CAN	80, 100 MHz	256k Flash 96k SRAM	EPI, I^2S, dual ADC	100-pin LQFP	$3–$8

Stellaris Example Device

Series Block Diagram:

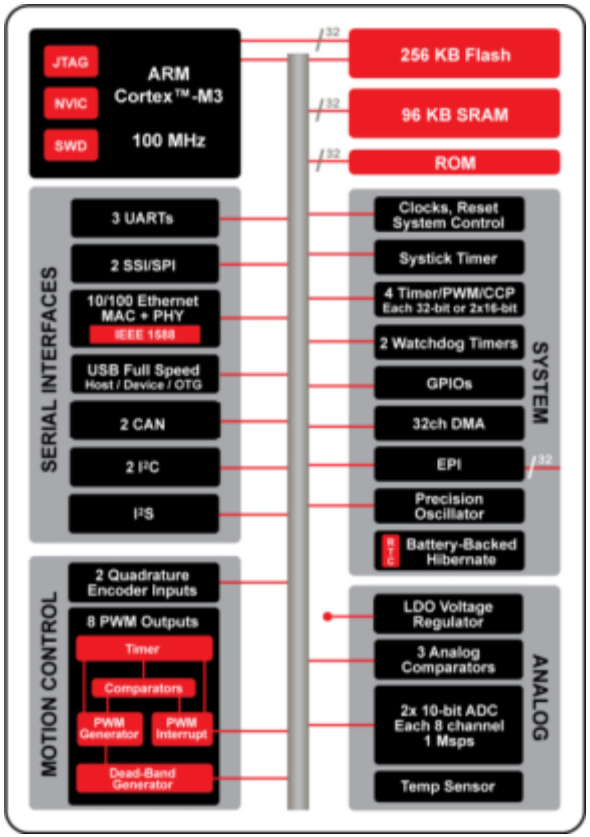

Series Selector Guide:

	MCUs in Series	Memory and Speed				Core		General Purpose Timer Modules					Motion Control			Serial Interfaces								Analog					Digital		Hibernate	Package Options
		Flash (KB)	SRAM (KB)	ROM SW Library	Ext. Peripheral Interface	Max Speed (MHz)	Internal Precision Oscillator	32-bit Timer	16-bit Timer	Watchdog Timers	CCP	RTC	PWM Outputs	PWM Fault Inputs	QEI	10/100 Ethernet MAC+PHY	IEEE 1588	CAN MAC	USB Full Speed	UART	I²C	SSI/SPI	I²S	ADC (10-bit) ADC Channels	ADC (10-bit) ADC Speed (Ksps)	Internal Temp Sensor	LDO Voltage Regulator	Analog Comparators	Digital Comparators	GPIOs (5-V)		
LM3S9000s	8	256	96	✓	✓	100	✓	4	8	2	8	✓	8	4	2	✓	✓	2	O/H/D	3	2	2	✓	16	1000	✓	✓	3	7	65	✓	100-LQFP

Series Evaluation Kits:

EK-LM3S9B90 ($99 US) & EK-LM3S9B92 ($99 US)

- Evaluation board with LM3S9B90 (hibernate) or LM3S9B92 (max GPIOs)
- In-Circuit Debug Interface (BD-ICDI) board
  - Connects to USB port on PC and to 10-pin ARM JTAG connector on the evaluation board
  - 8-pin power/UART connector provides power and virtual comm-port to the evaluation board
- Ethernet, CAN, USB and JTAG cables

AM17x/AM18x Comparison

Software Compatible

Pin to Pin Compatible

Part	Speed	Package	Peripherals																		
			USB 1.1	USB 2.0	EMAC 10/100	NAND Flash IF	PRU	EDMA	UHPI/HPI	McASP/SPORT	McBSP	UART	SPI	I2C	PWM	MMC/SD	LCDC	SATA	uPP	VPIF
AM1705	450MHz 375MHz	QFP		1	1	1	1	1		2		3	2	2	3	1				
AM1707	450MHz 375MHz	BGA	1	1	1	1	1	1	1	3		3	2	2	3	1	1			
AM1806	450MHz 375MHz	BGA		1		1	1	1	1	1	2	3	2	2	2	2	1		1	1
AM1808	450MHz 375MHz	BGA	1	1	1	1	1	1	1	1	2	3	2	2	2	2	1	1	1	1

AM1705 Processor

- **CPU Cores**
  - ARM926EJ-S™ (MPU) up to 450 MHz
- **Peripherals (1.8/ 3.3V IOs)**
  - EMIFB – Supports 133 MHz SDRAM (16/32-bit)
  - EMIFA – Supports Async/NAND Flash (8/16 bit)
- **Package**
  - 17 x 17mm QFP (1.0mm pitch), 176 pins
  - Extended Temperature Grade Options
    - Commercial (0C to 90C)
    - Industrial (-40C to 105C)
    - Automotive (-40C to 125C)
  - **Power (1.2V Core, 3.3V IOs)**
    - Active < 270 mW @ 300MHz/1.2V/70C (estimate)
    - Standby < 62 mW @ 300MHz/1.2V/25C (estimate)

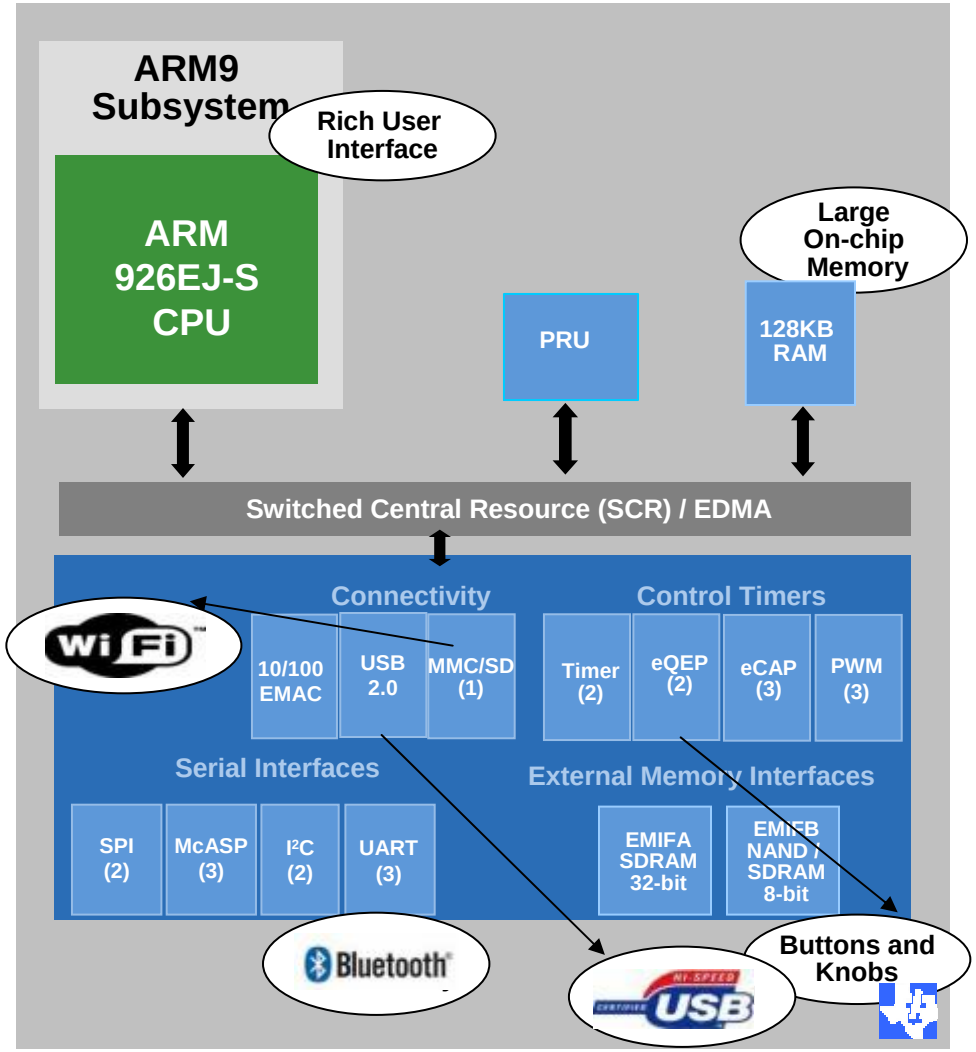

Agenda

- Introduction
- TI Processor offering
  - Low end
  - Mid range
  - High End
  - Voice attach for data centric Applications
- Other TI devices needed for this type of application
- TI SW offering
- TI partners
- Q&A
- C6472 demo

Residential/SMB GW

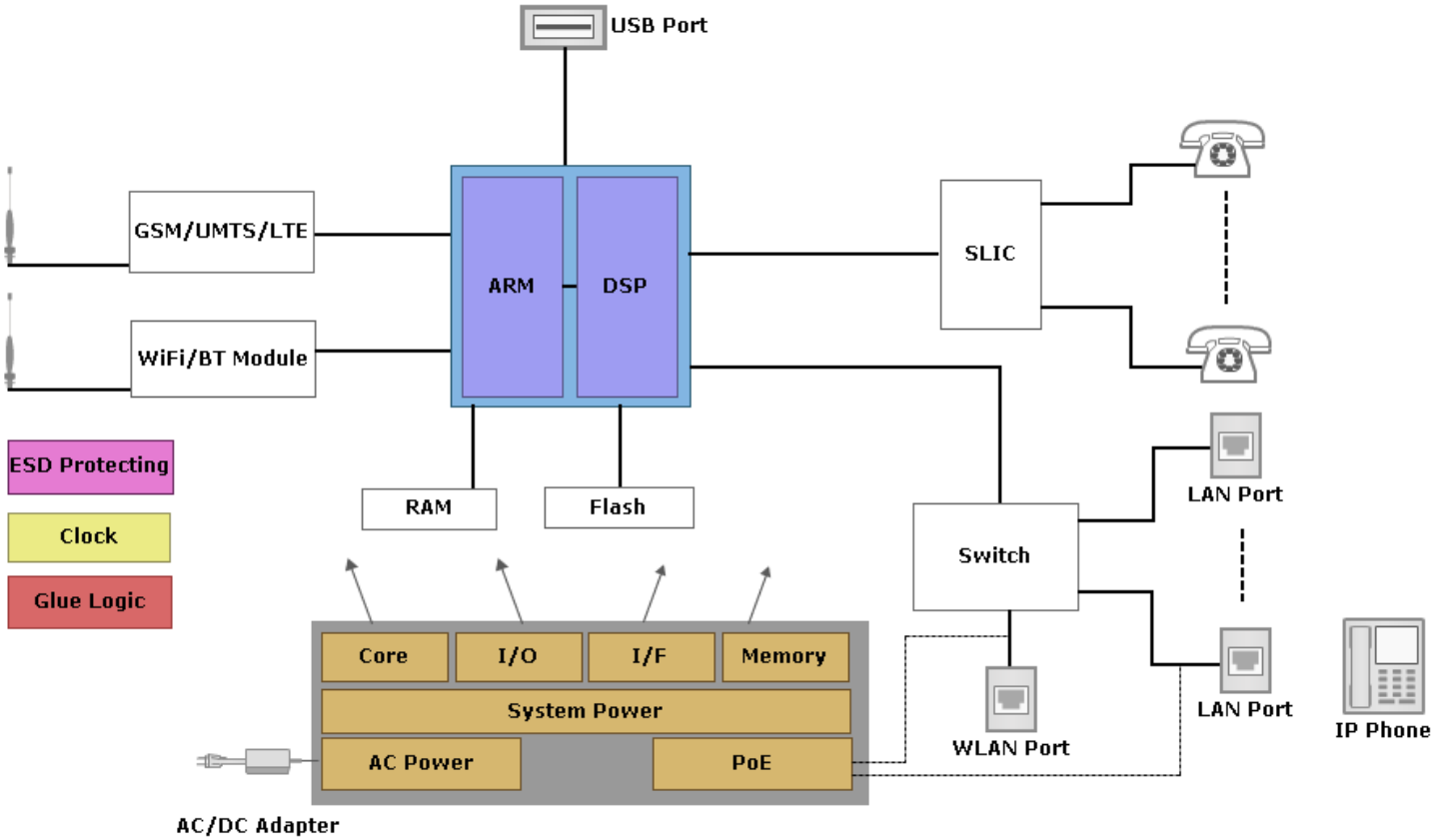

Typically SOC's are used for this type of application.

Residential/SMB GW

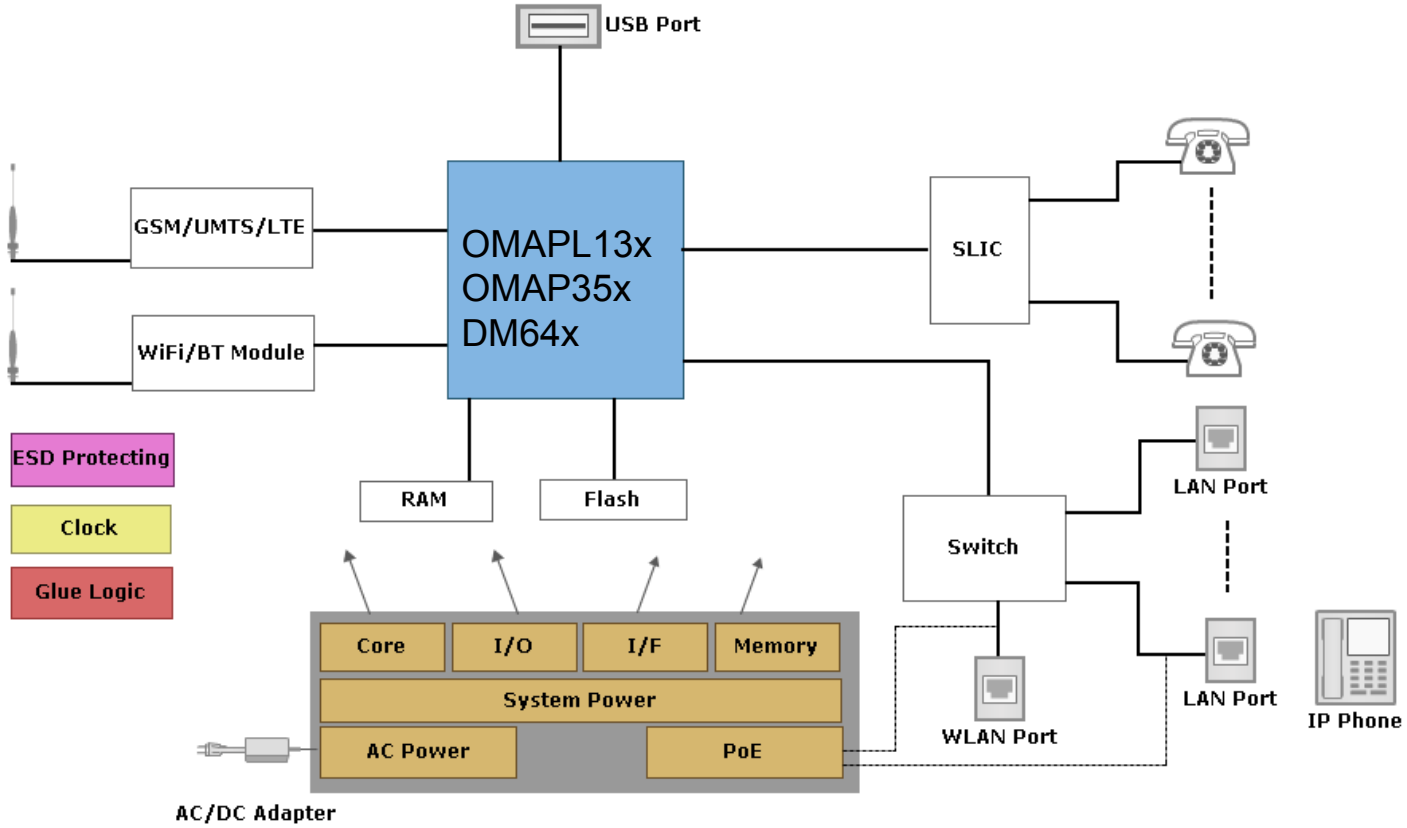

Device	Voice channels (G.729AB, ….)	Achievable number of channels heavily depends on the required channel configuration: RTP <-> SRTP AEC, Echo tail length, conferencing, …..
OMAPL13x	Up to 22	
OMAP35x	Up to 32	
DM64x	Up to 54	

OMAP-L137 (C674x DSP + ARM9)

Schedule: TMX – NOW; TMS – 1Q10

Features

- **CPU Cores**
  - ARM926EJ-S™ (MPU) up to 300 MHz
  - C674x DSP Core up to 300MHz
    - Combines C64x+ & C67x+ cores
- **Memory**
  - **ARM**: 16K I$, 16K D$, 64K ROM
  - **DSP**: 32K L1D, 32K L1P, 256K L2 Cache, 128K RAM
  - 1MB ROM
- **Peripherals (1.8/ 3.3V IOs)**
  - **10/100 Ethernet MAC**
  - EMIF1 – Supports 133 MHz SDRAM (16/32-bit)
  - EMIF2 – Supports Async/NAND Flash (8/16 bit)
  - **USB 2.0 - USB OTG**
  - USB 1.1 – USB Full speed (OHCI)
  - UHPI, **McASP (3),** UART(3), I²C (2), **SPI (2),** RTC, Timers (3), **MMC/SD**, LCD Controller, GPIO
- **Package – 17 × 17-mm BGA (1.0-mm pitch) ~256pins**
- **Pin-to-pin compatible with C6747 DSP**
- **Power (1.2V Core, 3.3V IOs)**
  - Active < 490 mW @ 300MHz/1.2V/25C (estimate)
  - Standby < 58 mW @ 300MHz/1.2V/25C (estimate)

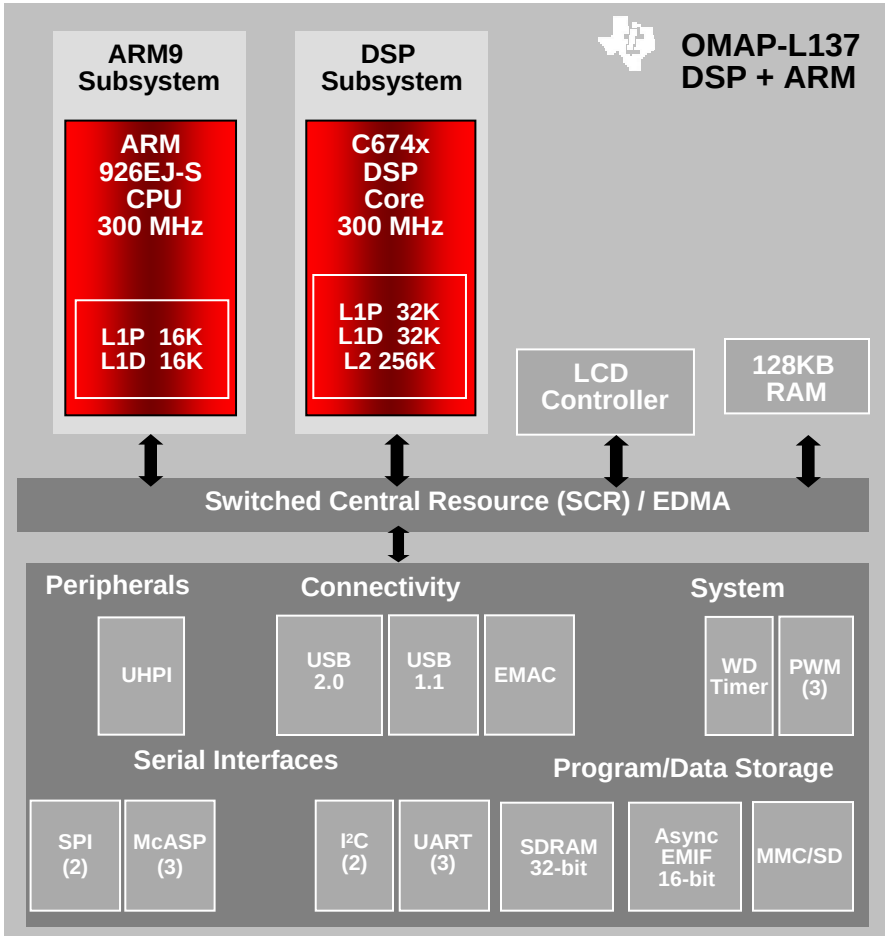

EVM Available

OMAP35x Processor

High-Performance, Low-Power Applications Processor

Performance

- Strong graphics capability combined with high-performance Cortex-A8
- Low power utilizing TI's SmartReflex™ technology
- Option for integrated PMU solution as well as discrete solutions
- D1+ resolution video performance utilizing TMS320C64x+ DSP and video hardware accelerators

Features

Core

- Cortex A-8 & DSP based TMS320C64x+ DSP and video accelerators (only on 3525/3530)
  - 600 MHz / 430 MHz @ 1.35V
  - 550 MHz / 400 MHz @ 1.27V
  - 500 MHz / 360 MHz @ 1.2V
- NEON™ SIMD Coprocessor (3530 only)

Memory

- ARM:
  - 16 kB I-Cache; 16 kB D-Cache; 256kB L2
- TMS320C64x+ DSP and video accelerators
  - L1 32kB Program Cache/32kB Data Cache + 48kB SRAM
  - L2 64kB Program / Data Cache + 32 kB SRAM; 16 kB ROM
- On Chip: 64k B SRAM; 112kB ROM

Peripherals

- Support for mSDRAM, LPDDR
- Support for NOR, NAND, SRAM, Pseudo SRAM
- USB 2.0 HS Compliant OTG Controllers w/ additional 2 USB HS Host Controllers
- Security acceleration supporting: RNG, 2× DES/3DES, SHA1/MD5, SHA2/MD5,2× AES, and Fast PKA (HS device only)
- Display subsystem with PIP, color space conversion, rotation, and resizing support

- Package 1: 12 × 12 mm, 0.4-mm pitch, POP (can be used with discrete memory as well)
- Package 2: 16 × 16 mm 0.65-mm pitch

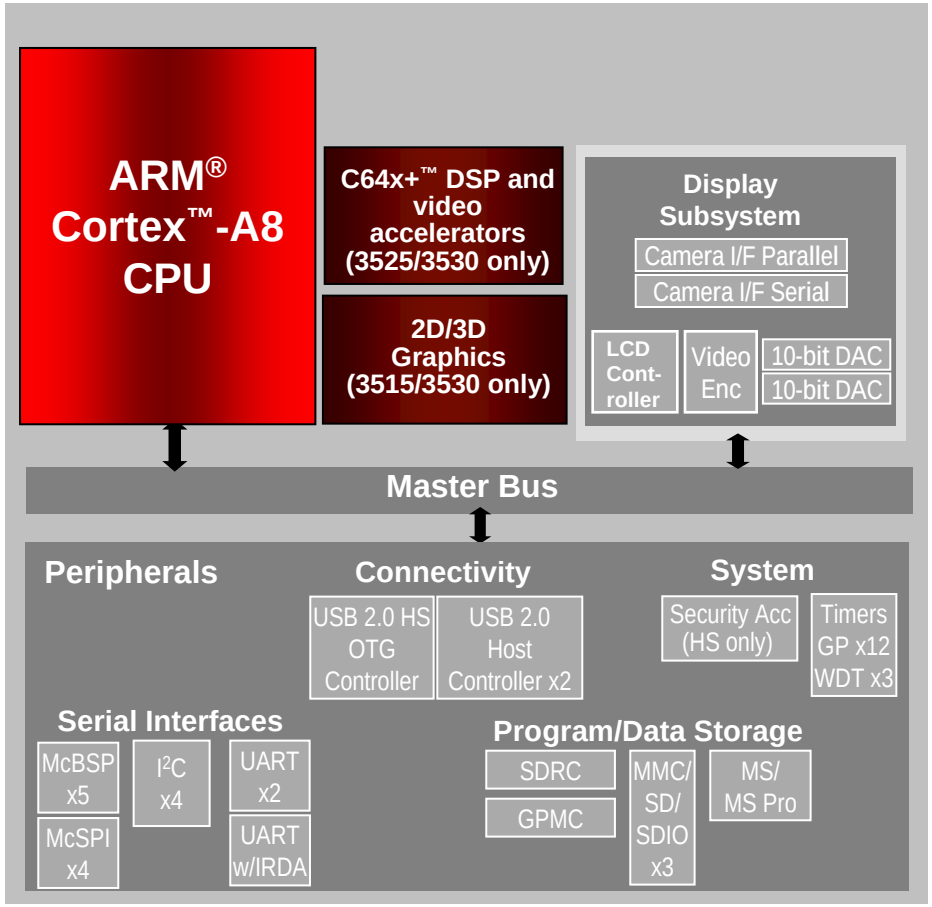

TMS320DM6446 SoC

Features

- Core
  - ARM926EJ-S™ (MPU) Core
  - TMS320C64x+™ DSP Core
- Memory
  - On-Chip L1/SRAM: 112 KB DSP, 40 KB ARM
  - On-Chip L2/SRAM: 64 KB DSP
- Peripherals
  - 10/100 Mb/s Ethernet MAC (EMAC)
  - Video Processing Subsystem
  - ATA/ATAPI I/F
  - USB Port With Integrated 2.0 PHY
  - Flash Card Interfaces
  - SPI
  - ASP, UART,I2C

- Package: 23mm x 23mm - 361-Pin BGA

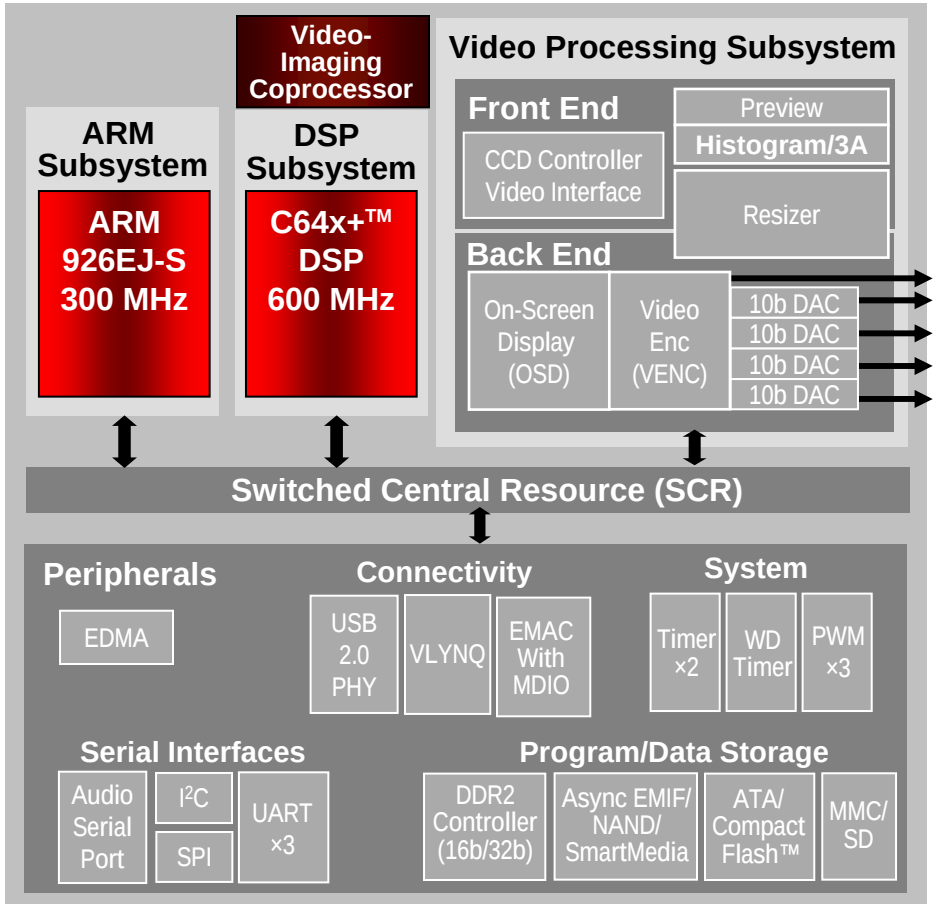

EVM Available

Agenda

- Introduction
- TI Processor offering
  - Low end
  - Mid range
  - High End
  - Voice attach for data centric Applications
- Other TI devices needed for this type of application
- TI SW offering
- TI partners
- Q&A
- C6472 demo

Enterprise or Central Office

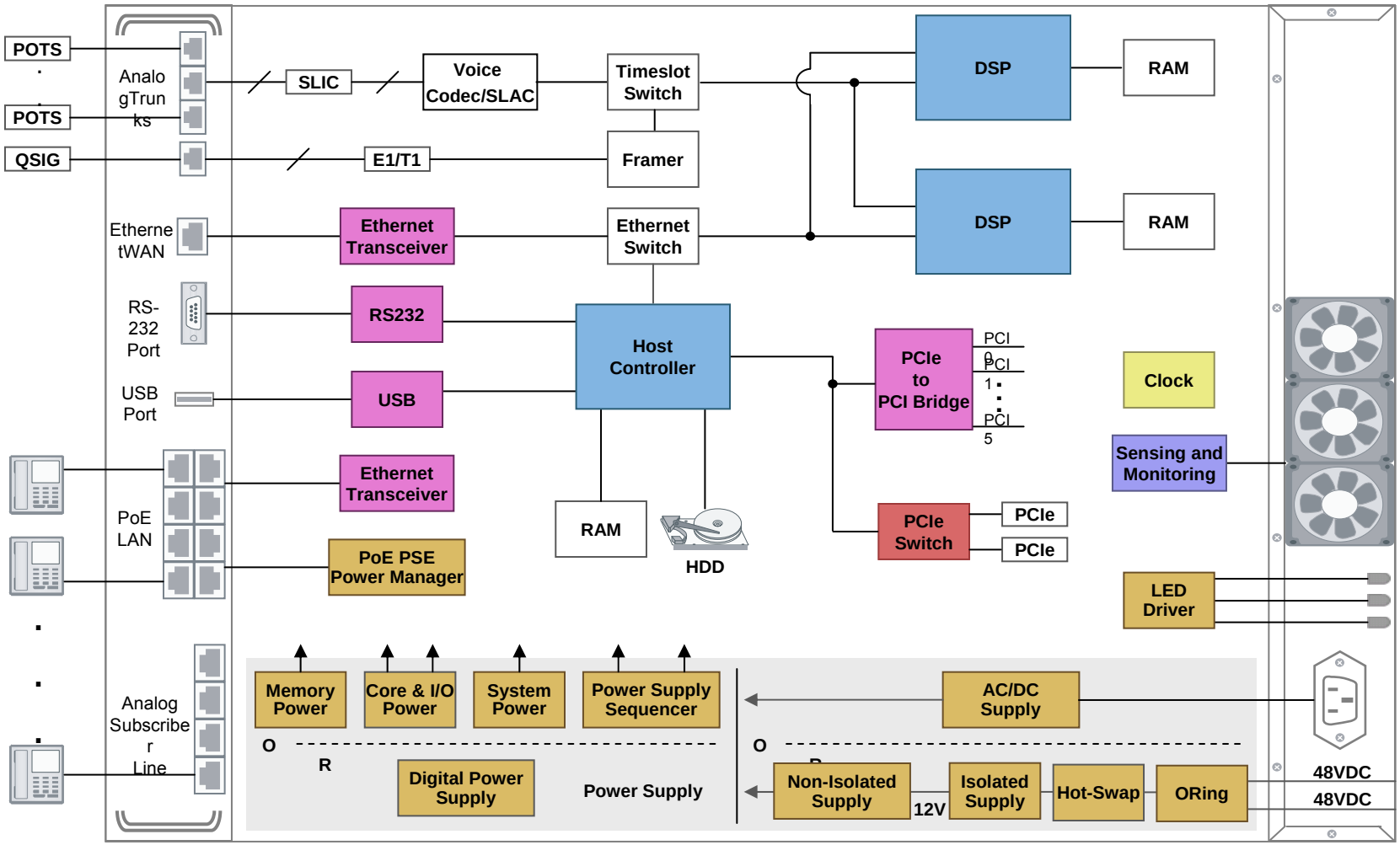

Enterprise or Central Office (Devices)

Device	Voice channels (G.729AB, ….)	Achievable number of channels heavily depends on the required channel configuration: RTP <-> SRTP AEC, Echo tail length, conferencing, …..
TMS320C6421	Up to 7	
TMS320C6424	Up to 25	
TMS320C6747	Up to 22	
TMS320C6455	Up to 89	
TMS320C6474	Up to 220	
TMS320C6472	Up to 300	

TMS320C6421 (C64x+ DSP)

Features

- C64x+™ Core
  - 400MHz, 500MHz, 600MHz, 700MHz
  - Up to 5600 MMACs performance
- Memory
  - 80-KB L1D and 32-KB L1P cache/SRAM
  - 128-KB L2 cache/SRAM
- Peripherals
  - Two EMIFs – 16-bit DDR2 333MHz; 8-bit EMIF
  - VLYNQ™ / EMAC (RMII/MII) or HPI / RMII
  - McBSP or McASP – Audio and telecom interfacing
  - UART (2), I^2C, GPIO, PWM(3), 64-bit timers (2)
- **Package - 16 × 16-mm BGA, (0.8-mm pitch)**
- **Availability - Production: Now**

Benefits

- Best in class $/channel for telecom
- Lowest power C64x – increased channels/ mW
- Less heat dissipation for heat sensitive apps
  - Total Power < 555 mW @ 300 MHz/1.05V/25C
  - For DSP at 70% loading, mDDR 50% active at 135 MHz
  - Standby Power < 172 mW @ 1.05V/25C

Applications

- Portable Telecom Equipment
- Portable Public Safety Equipment
- Military

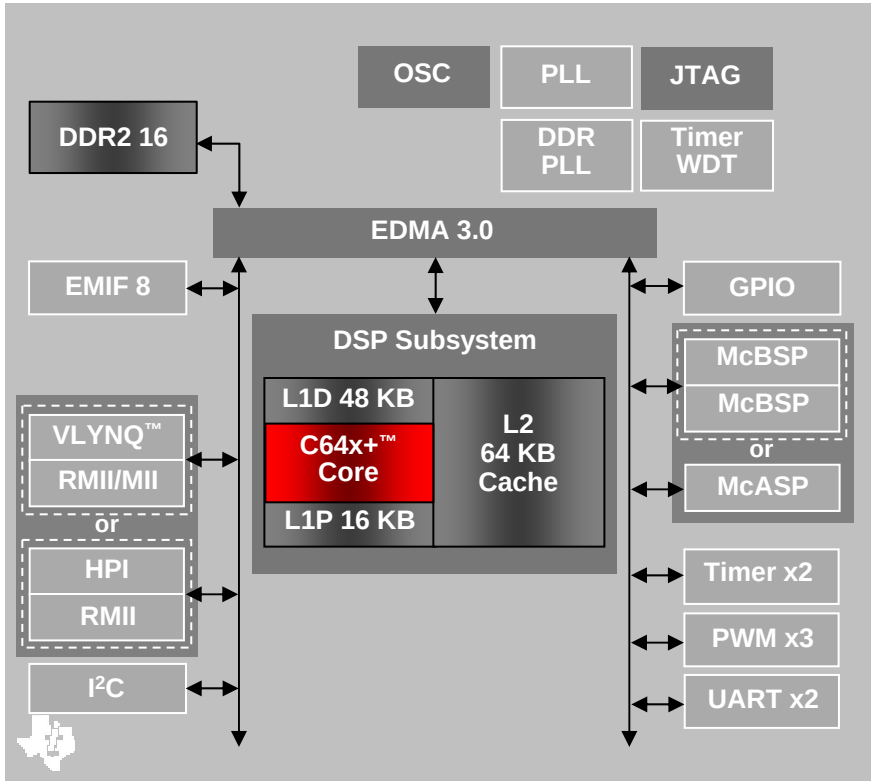

** Please check user guide for MUXing options.*

EVM Available Now

TMS320C6424 (C64x+™ DSP)

Features

- C64x+™ Core
  - 400 MHz, 500 MHz, 600 MHz, 700 MHz
  - Up to 5600 MMACs performance
- Memory
  - 80-KB L1D and 32-KB L1P cache/SRAM
  - 128-KB L2 cache/SRAM
- Peripherals
  - Two EMIFs – 32-bit DDR2 266 MHz; 16-bit EMIF
  - PCI33 or VLYNQ™ / EMAC (RMII/MII) or HPI / RMII
  - McBSP (2) or McASP – Audio and telecom interfacing
  - UART (2), I^2C, GPIO, PWM(3), 64-bit timers (2)
- **Package - 16 × 16-mm BGA (0.8-mm pitch)**
- **Availability - Production: Now**

Benefits

- Best in class $/channel for telecom
- Lowest power C64x – increased channels/ mW
- Less heat dissipation for heat sensitive apps
  - Total Power < 555 mW @ 300 MHz/1.05V/25C
  - For DSP at 70% loading, mDDR 50% active at 135 MHz
  - Standby Power < 172 mW @ 1.05V/25C

Applications

- Portable Telecom Equipment
- Portable Public Safety Equipment
- Military

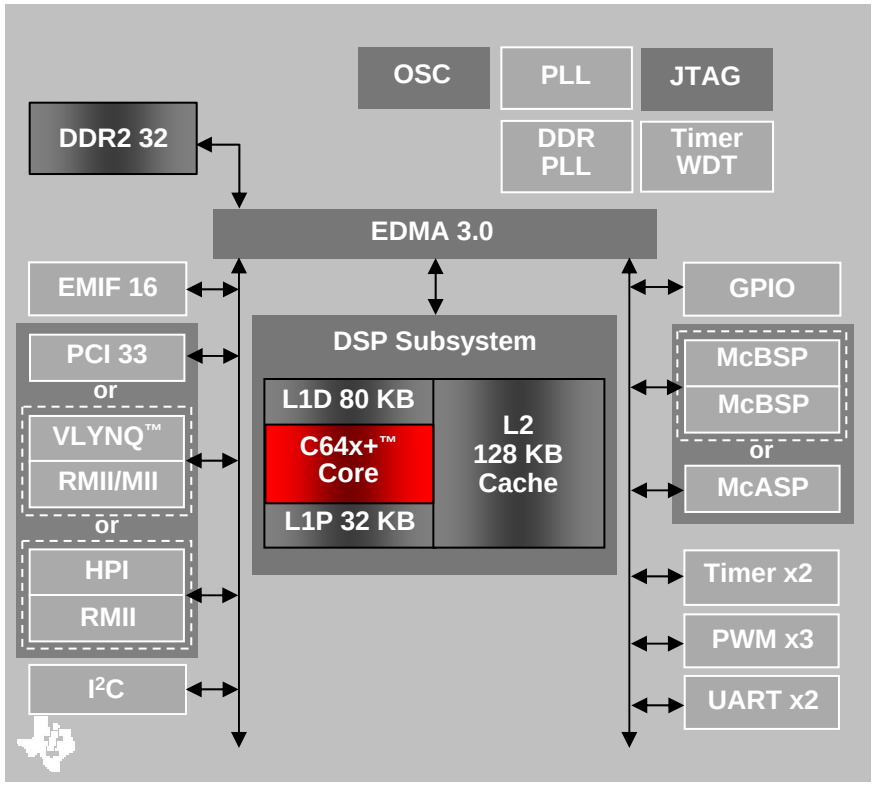

** Please check user guide for MUXing options.*

EVM Available Now

TMS320C6747 DSP

Schedule: TMX – NOW; TMS – 1Q09

Features

- **New C674x Core**
  - Combines C64x+ & C67x+ cores
  - Up to 300 MHz
- **Memory**
  - 32 KB L1D, 32 KB L1P, 256 KB L2
  - 128KB RAM
- **Peripherals (3.3V I/Os)**
  - 10/100 Ethernet MAC (EMAC)
  - USB 2.0 – USB OTG
  - USB 1.1 – USB full speed (OHCI)
  - EMIF1 – Supports 133 MHz SDRAM (16/32-bit)
  - EMIF2 – Supports Async/NAND Flash (8/16 bit)
  - UHPI, McASP (3), UART (3), I^2C(2), SPI(2), RTC, PWM(3), MMC/SD, LCD Controller, Timers (2), GPIO
- **Package**
  - 17 × 17mm BGA (1.0-mm pitch) ~256 pins
  - Process: 0.065-mm
  - Extended Temperature Grade Options
- **Pin-to-pin compatible with OMAP-L137**
- **Power (1.2V Core, 3.3V IOs)**
  - -Active < 470 mW @ 300MHz/1.2V/25°C (estimate)
  - -Standby < 58 mW @ 300MHz/1.2V/25°C (estimate)

Applications

- Portable Music effects, Audio Conferencing, Gaming, Industrial control, Catalog/General Purpose

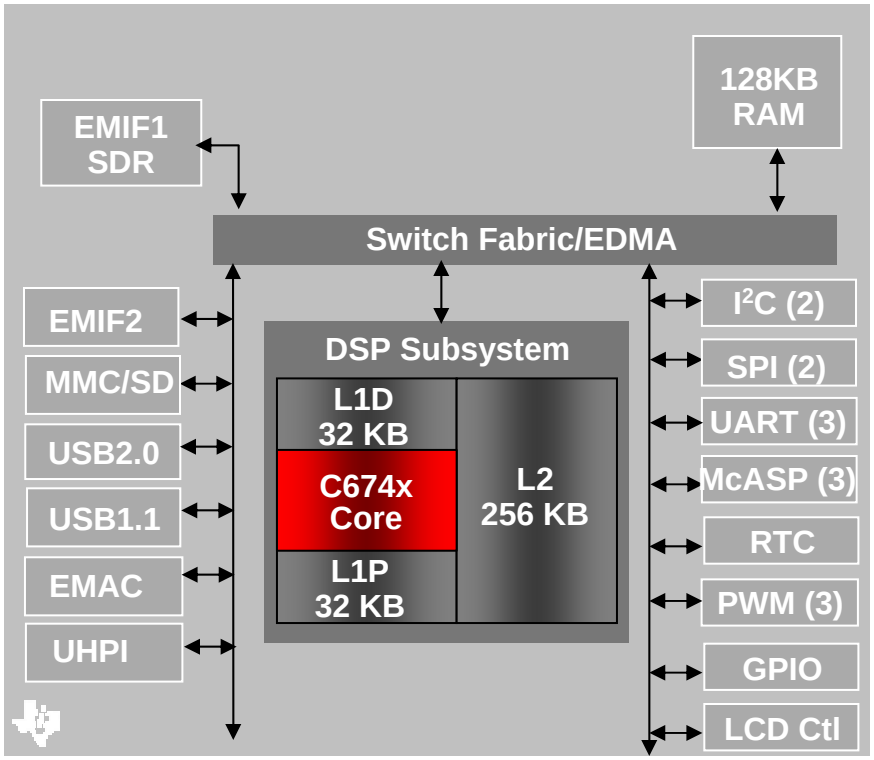

EVM Available

TMS320C6455 DSP

Fastest Single-Core Programmable DSP Enables High-Performance Multi-Processing via Serial RapidIO® and High-Bandwidth Peripherals

Features

- **Enhanced C64x+™ Core**
  - 720 MHz, 850 MHz, 1 GHz, 1.2 GHz
  - Up to 9600 16-bit MMACS
- **Memory**
  - 32 KB L1D, 32 KB L1P Cache/SRAM
  - 2 MB L2, 256 K Cache/SRAM, remainder SRAM only
- **Acceleration**
  - Viterbi Decoder Co-Processor (VCP)
  - Turbo Decoder Co-Processor (TCP)
- **Peripherals**
  - Serial RapidIO: 10Gb/s full duplex
  - Other high-bandwidth peripherals: Gigabit Ethernet MAC, UTOPIA, PCI-66, HPI
  - Two EMIFs: 32-bit DDR2, 64-bit EMIF
- Package: 697 BGA, 24×24mm, 0.8mm, Pb-Free Balls

Benefits

- Serial RapidIO for DSP-to-DSP, DSP-to-Switch and DSP-to-FPGA interconnectivity
- Enhanced core enables 20% higher cycle performance
- 20–30% smaller code size from 16-bit compact instructions and SPLOOP buffer

Applications

- Telecom
- Network infrastructure
- Medical
- Emerging

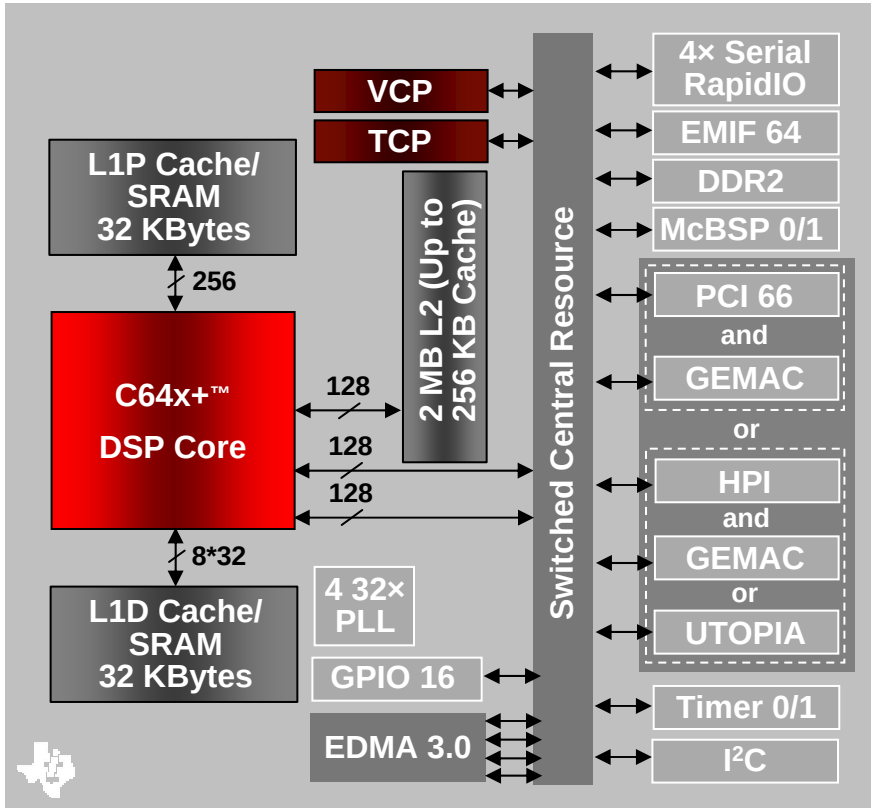

EVM Available

DSK Available

Pin compatible with C6454 DSP

TMS320C6474 Processor

Performance-Optimized Multicore Processor

Features

- **New C64x+™ Core**
  - Three (3) C64x+ DSP Core at 1GHz each
  - 16/32-bit ISA, doubled MPY vs C64x core
- **Memory**
  - 32 kB L1 program memory, 32 kB L1 data memory
  - 3 MB of total L2 memory (2 configurations) 1MB / 1MB / 1MB or 1.5MB / 1MB / 0.5MB
  - Boot ROM, DDR2-667MHz 32-bit
- **Acceleration**
  - VCP2, TCP2
- **Peripherals**
  - 2x sRIO (1x links)
  - 10/100/1000 Mbps Ethernet – SGMII
  - Antenna interface supporting OBSAI / CPRI – 6 links
  - McBSP (TDM)
- 65-nm process
- 561 balls, 23×23 mm FC-BGA (5 rows + 11×11 center array)

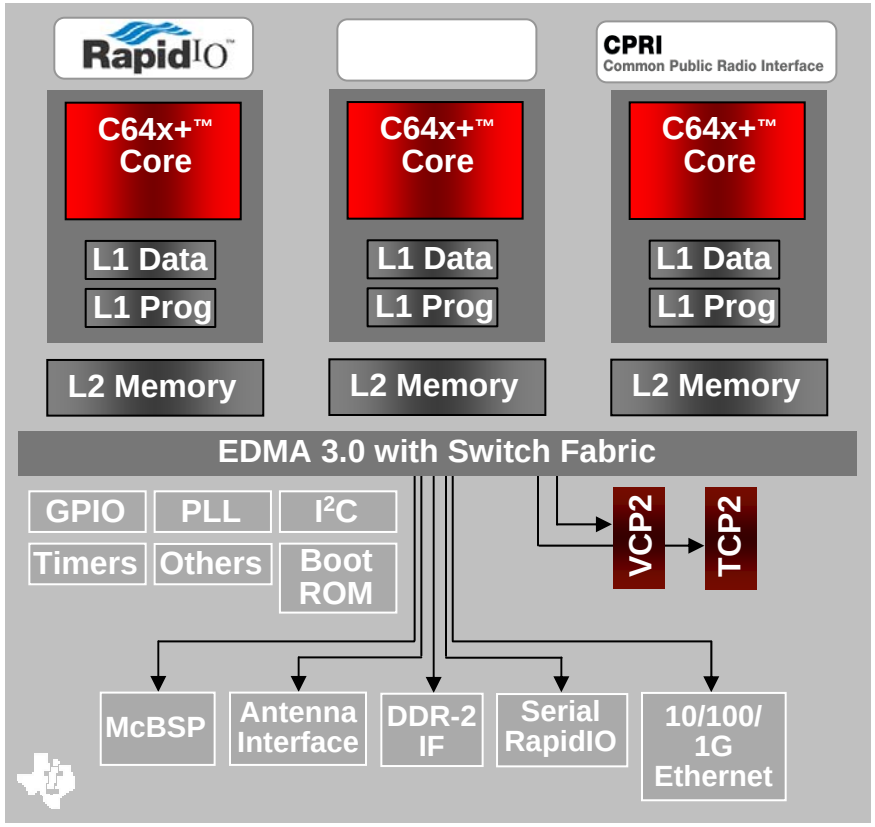

Benefits

- 3-GHz raw performance
- No ASIC required
- Interconnect efficiency due industry standards (sRIO, OBSAI / CPRI, DDR memory, etc.)
- SmartReflex™ to minimize power consumption

EVM Available

TI's High Performance DSP roadmap

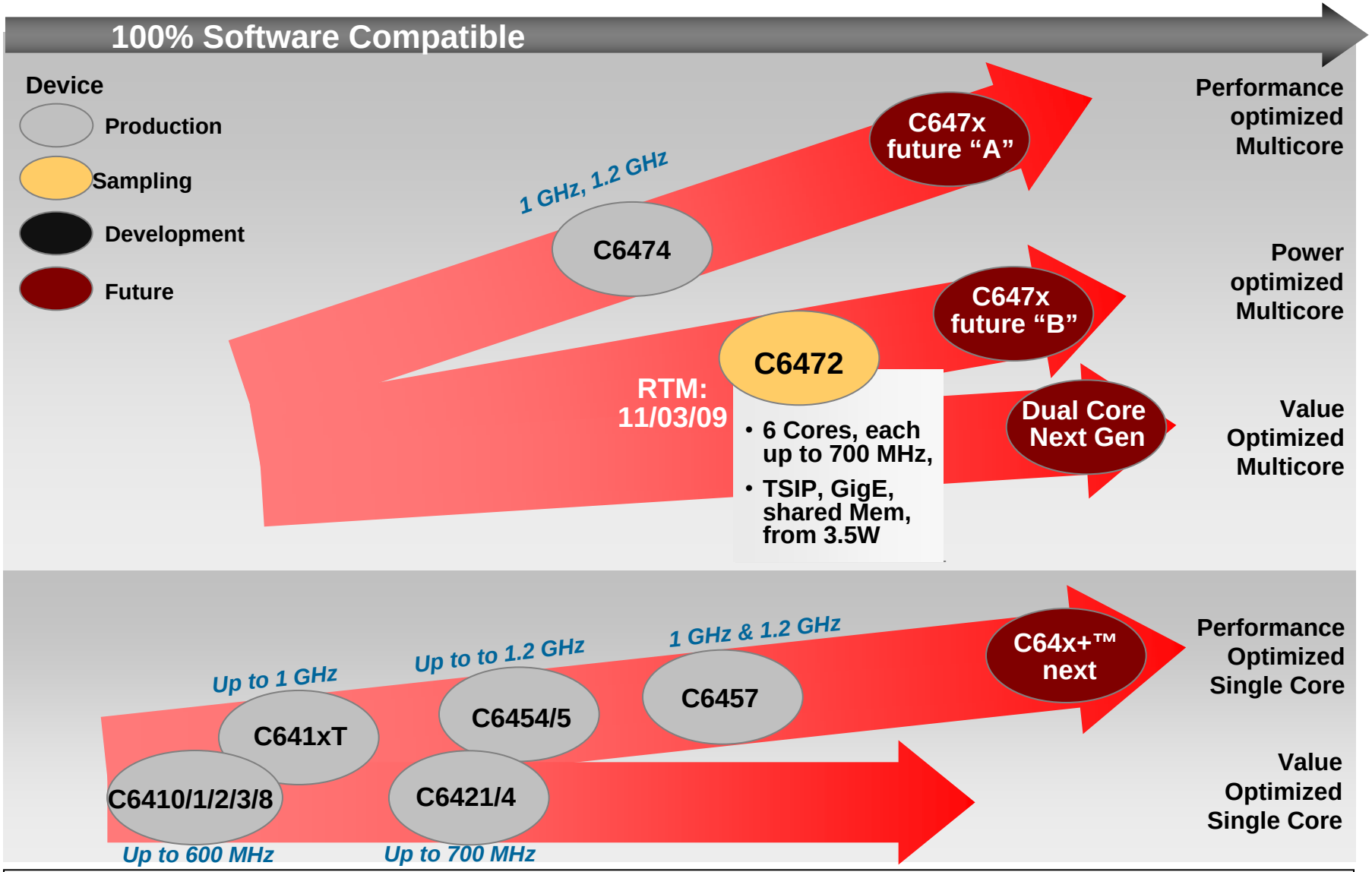

C6472 Architecture Maximizes System Performance

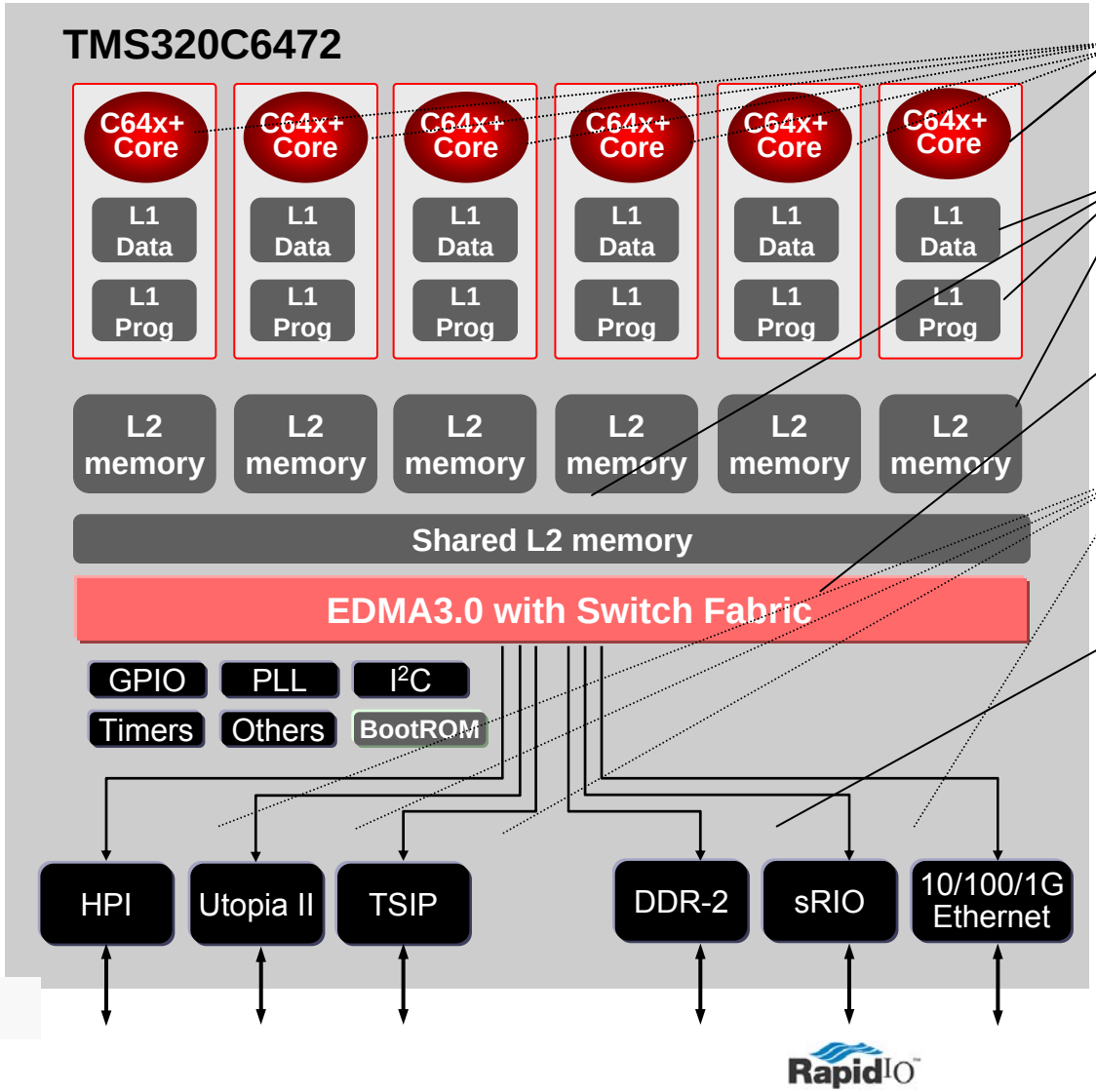

6 High Speed C64x+ CPUs

- 3 different speed versions – 500MHz, 625MHz, & 700MHz Deliver 24,000, 30,000, & 33,600 (16-bit) MMAC)
- Based on TI's flagship C64x+ DSP core (achieves BDTI's highest speed score)
- 100% backward compatibility with other C64x DSPs enables legacy code reuse for development efficiency & faster time to market
- Benign interrupt controller

High Density Memory System

- Memory architecture enables highest CPU performance
- Separate L1 Program and Data Memory per CPU
- High bandwidth communications between peripherals, memories and CPUs.
- Various Peripherals enhance data communication
- Unified Memory peripherals can be accessed by CPU
- EMIF – Extended Memory Interface
- Shared L2 Memory

Switch Fabric DMA Engine

- Memory transfers without CPU
- UTOPIA 2 – supports telecom networks
- Gigabit Ethernet – supporting IP networks and systems
- 64x64 crossbar
- 32-bit multiplexed bus
- Memory mapped DDR memories only
- 10/100 Ethernet port supports 30 L2 timeslots
- Access managed by separate controller

Communications Subsystem

- Ultra high throughput, high bandwidth networks
- Cable, Cellular, Wireless, Broadband, Enterprise, Consumer, Medical, Industrial
- Supports high board density
- Time to market in market window
- Multiple standards
- Mii, rMii, SMII
- GMii, rGMii
- Multiple standards
- Interoperability
- Extensibility

DSP based system provides

- Memory mapped DDR memories only
- Can be accessed by other DSPs
- Access managed by separate controller
- Direct connect or through switch.
- Host port allows DSP memory probe.

C6472 architecture maximizes system performance

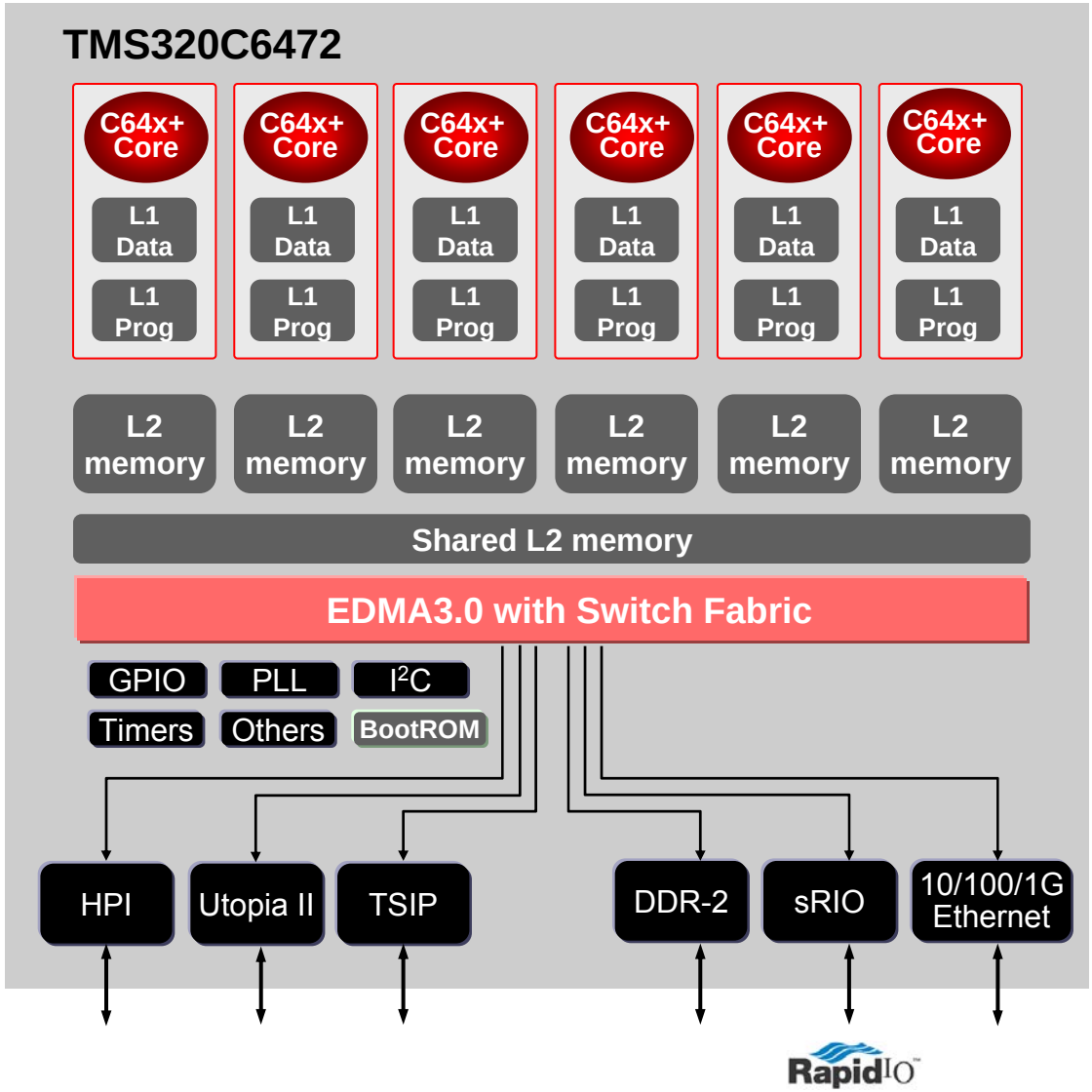

6 High Speed C64x+ CPUs

High Density Memory System

"Switch Fabric" DMA Engine

Communications Subsystem

DDR-2 Memory Interface

Small footprint allows
high board density: 24x24, FC-BGA

DSP based system provides programmability, flexibility, extensibility

Power optimization multicore C6472 DSP achieves higher performance density

Same performance, 40% less power

> 80% less space

Power consumption

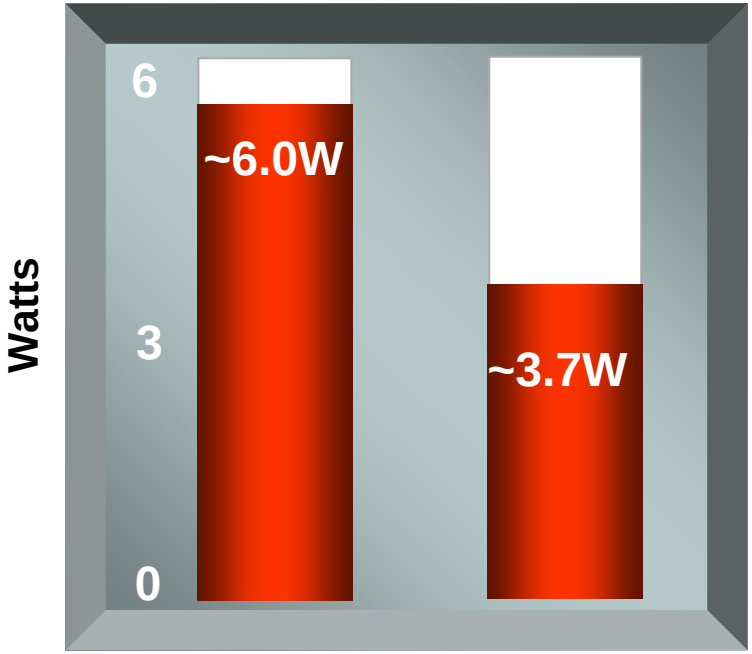

Ex: Same power budget

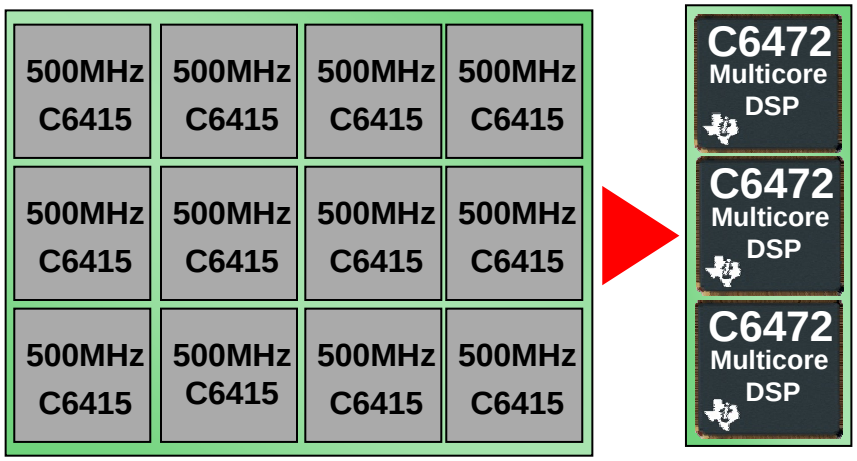

6 GHz raw performance

9 GHz raw performance

50% more performance per Watt at < 30% space

Source: TI Internal

Significant savings for DSP applications: 6 cores on a single chip = 2/3 less DSP cost

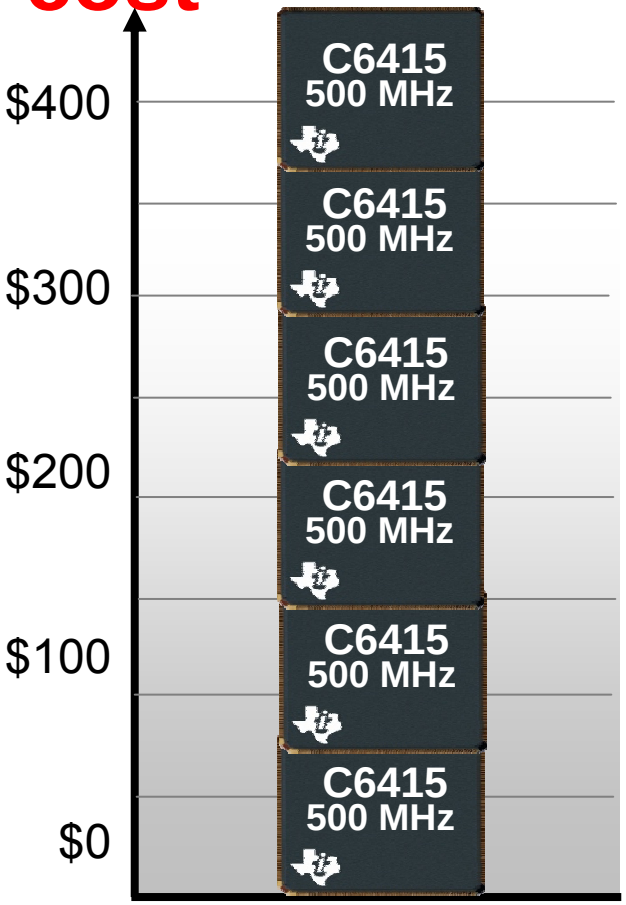

$75 each x 6 = $450

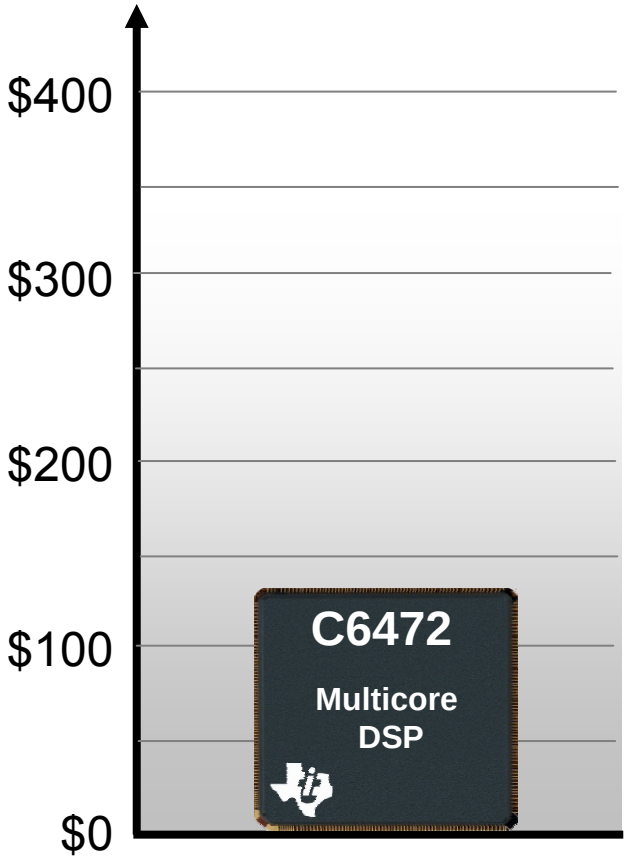

$140 total

= 2/3 less DSP cost

All prices listed in 1ku

Development tools and support ease customer migration

C6472 Evaluation Module

Software debug platform for high performance application development

- Single C6472 processor
- 256MB of 533MHz DDR2
- 128MB Nand Flash
- 1Mb I2C EEPROM for local boot (remote boot possible)
- 2 RGMII 10/100/1000 Ethernet ports with MDIO
- RS232 UART
- Single module 170-pin AMC expansion for SRIO, TSIP, EMAC1 and I2C
- C6455 EVM pin-compatible HPI daughtercard connector
- 2 user programmable LEDs and DIP SWs
- 14-pin JTAG emulator header
- Embedded JTAG emulation with USB Host interface
- Board-specific Code Composer Studio™ Integrated Development Environment

- Simple setup
- Includes design files such as Orcad and Gerber
- Board support library accelerates software development on the EVM

Support:

- Broad market support: Product Information Center - FAE - Community forums - Documentation - Training

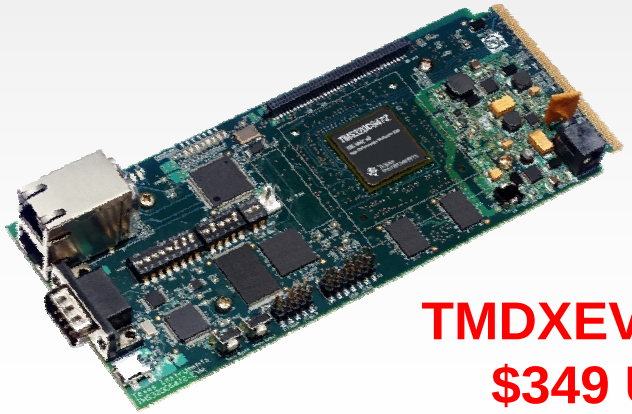

TMDXEVM6472
$349 USD

Software – CCSv4, BSP, CSL, POST, NDK, Demo

C6472 EVM Block Diagram

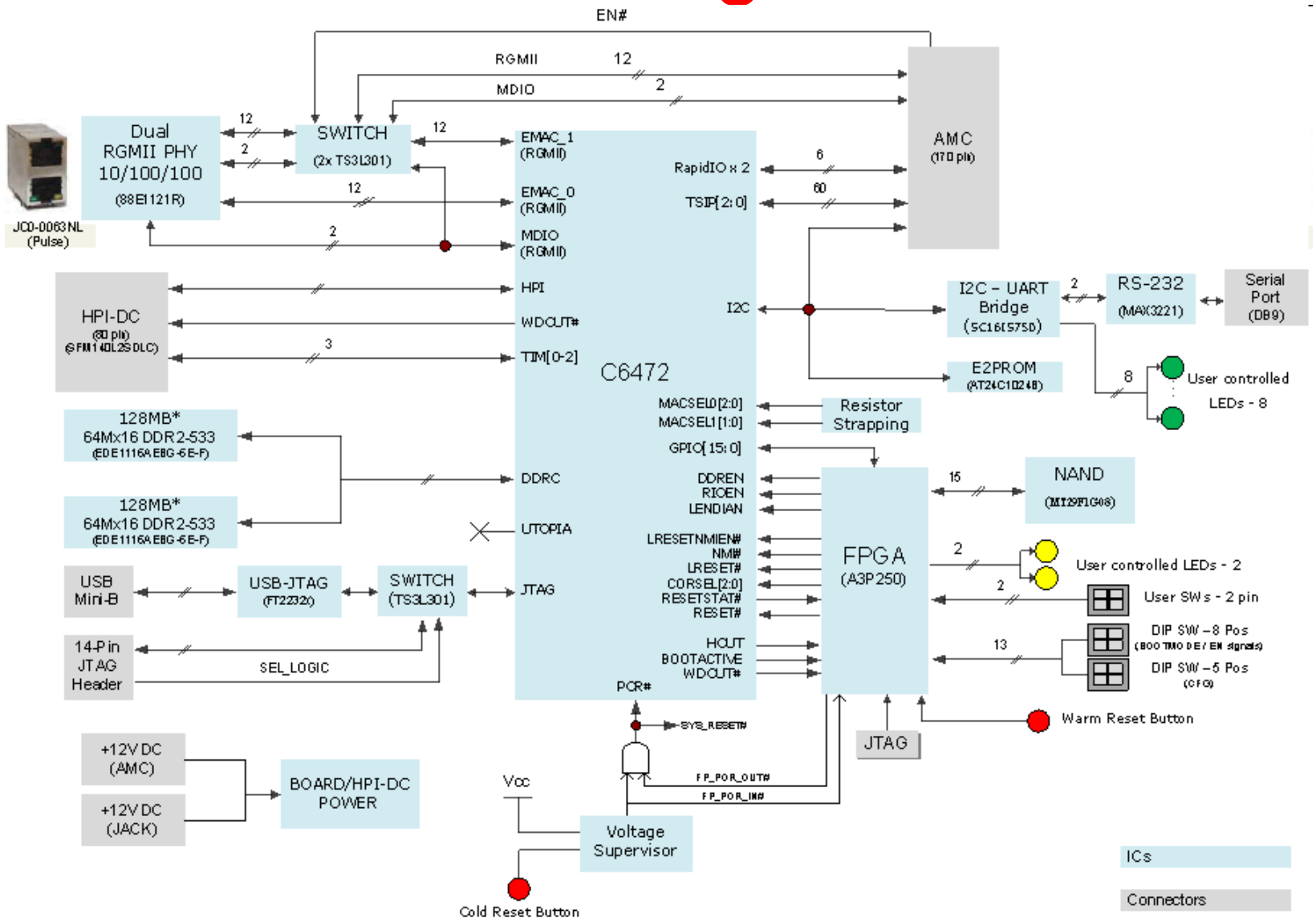

Two New Sitara™ MPUs: AM3517 and AM3505 Cortex™-A8 Based Processors

Benefits

- First Cortex-A8 devices for industrial market
- 1000 Dhrystone MIPS at sub 1 watt power consumption
- Integrated graphics, high-res display for intuitive user interfaces
- Native support for large displays
- System integration reduces board complexity

Sampling now

EVM: Open order entry

TMDXEVM3517

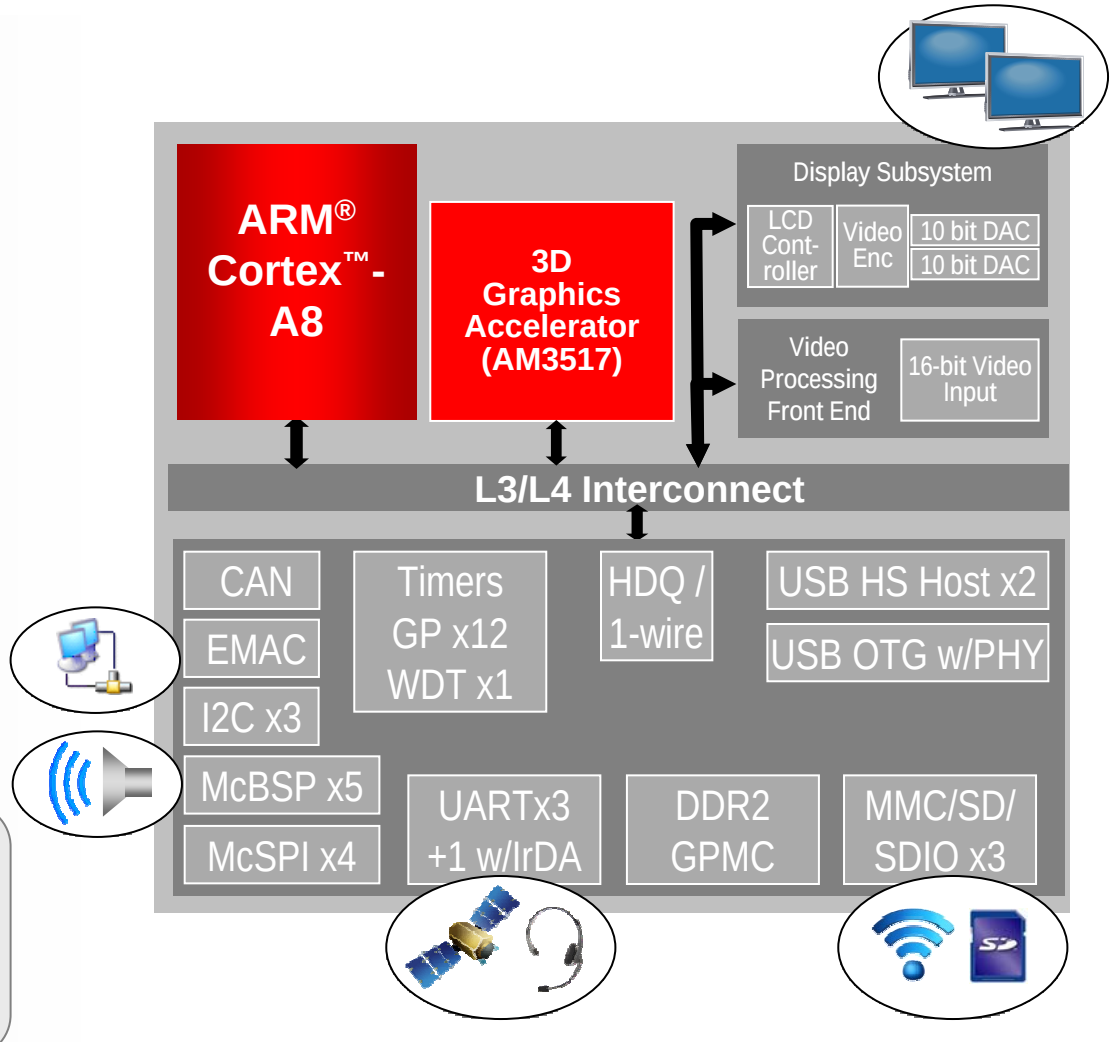

AM3517(05) Processor – GW Host Peripherals

Features

- **Peripherals**
  - USB 2.0 OTG w/PHY
  - RMII EMAC controller 10/100
  - USB HS Host x2
  - MMC/SD card interface x3
  - LCD controller and TV out
  - Display subsystem with PIP, color space conversion, rotation, resizing
  - 3.3V IO
- **Power**
  - Total Power: 0.5W – 1.5W
  - Standby Power: 12mW
- **Package**
  - ZCN – 17x17 mm, 0.65 mm pitch Utilizes Via Channel™ Array Technology with 0.8mm pitch plus design rules.
  - ZER – 23x23 mm, 1.0mm pitch

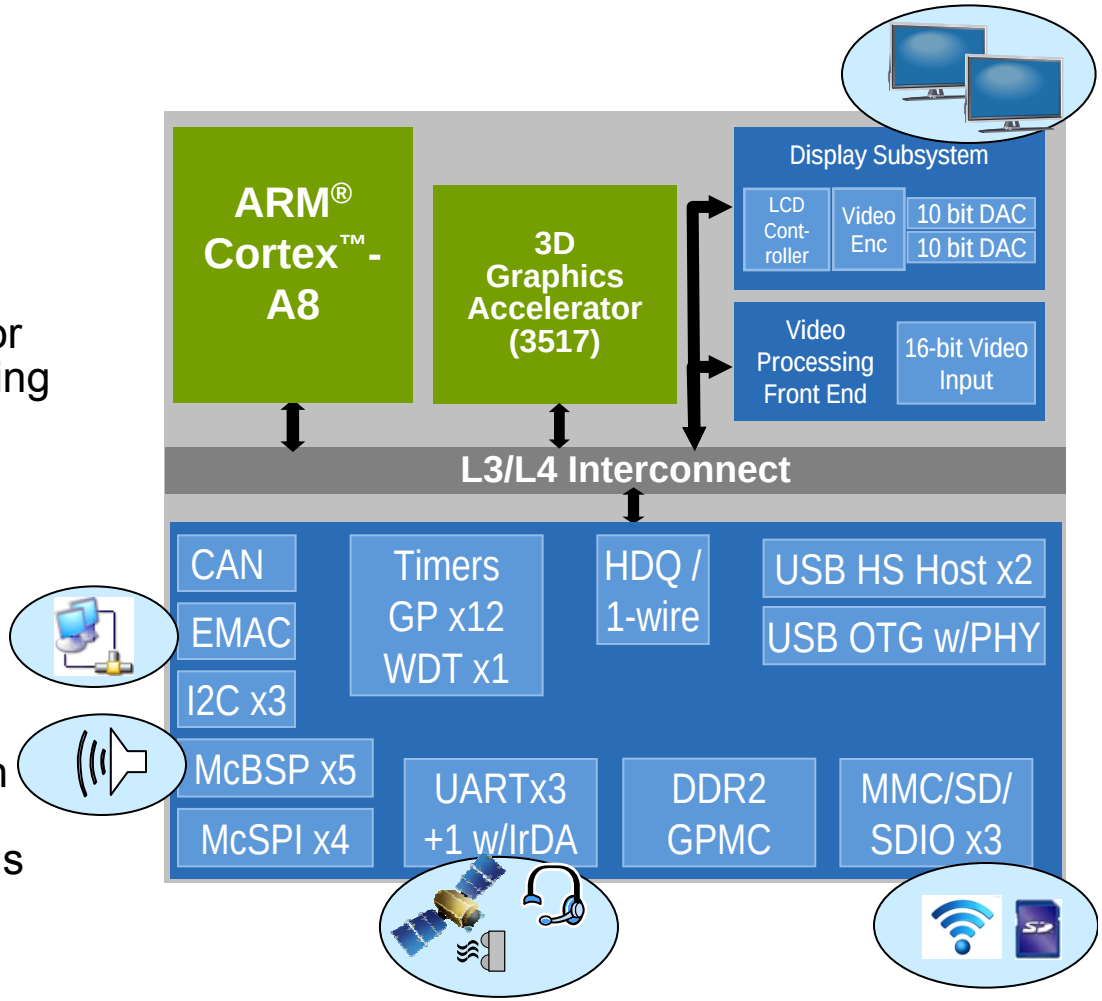

Agenda

- Introduction
- TI Processor offering
  - Low end
  - Mid range
  - High End
  - Voice attach for data centric Applications
- Other TI devices needed for this type of application
- TI SW offering
- TI partners
- Q&A
- C6472 demo

Block Diagram for Data Centric Applications

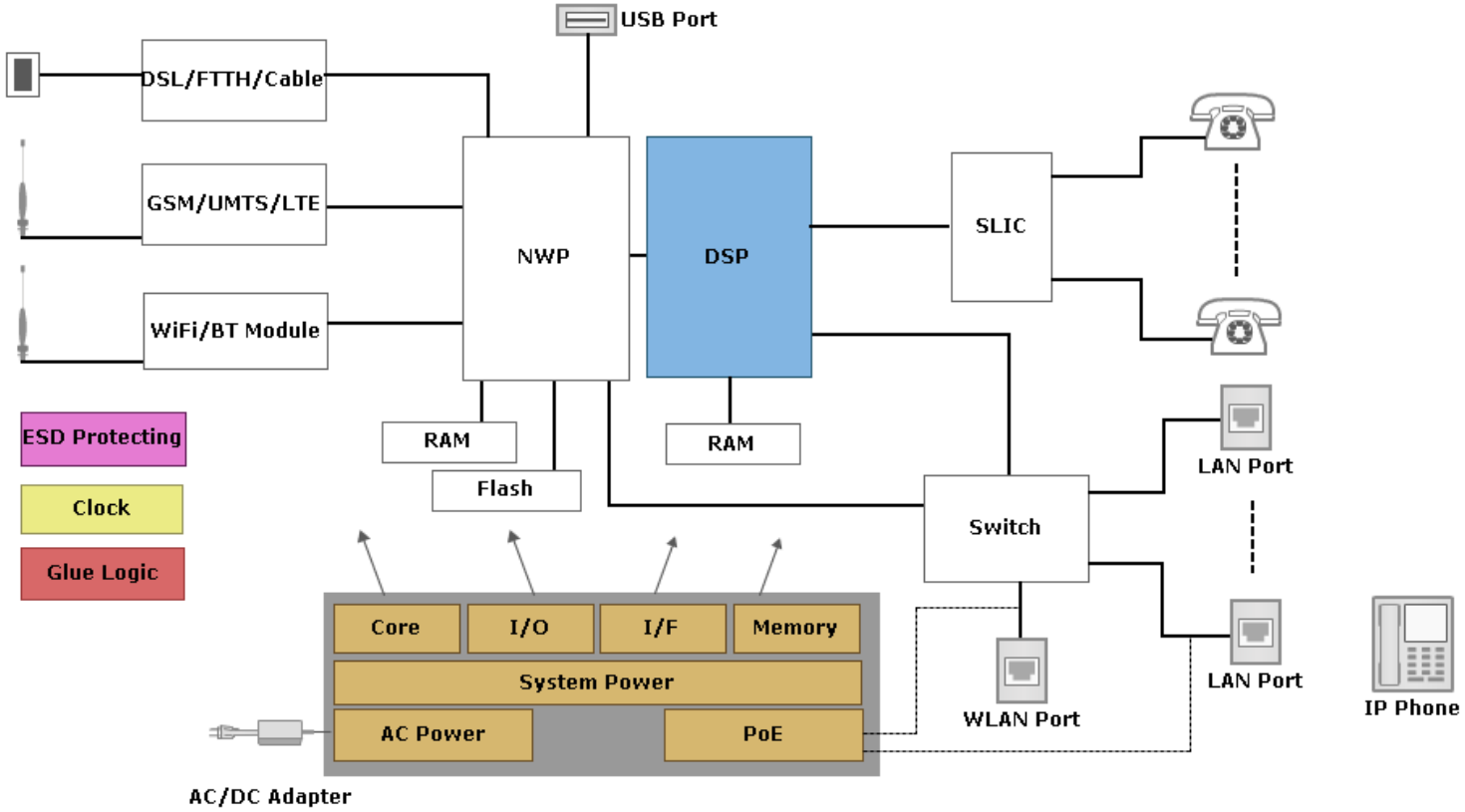

- Typically a network Processor doesn't offer VoIP capabilities.
- Adding a dedicated DSP to deal with voice is the best option
- Beside the DSP's already mentioned in the prior section a solution based on a C55 is an option as well.

Low power C5000™ DSP portfolio

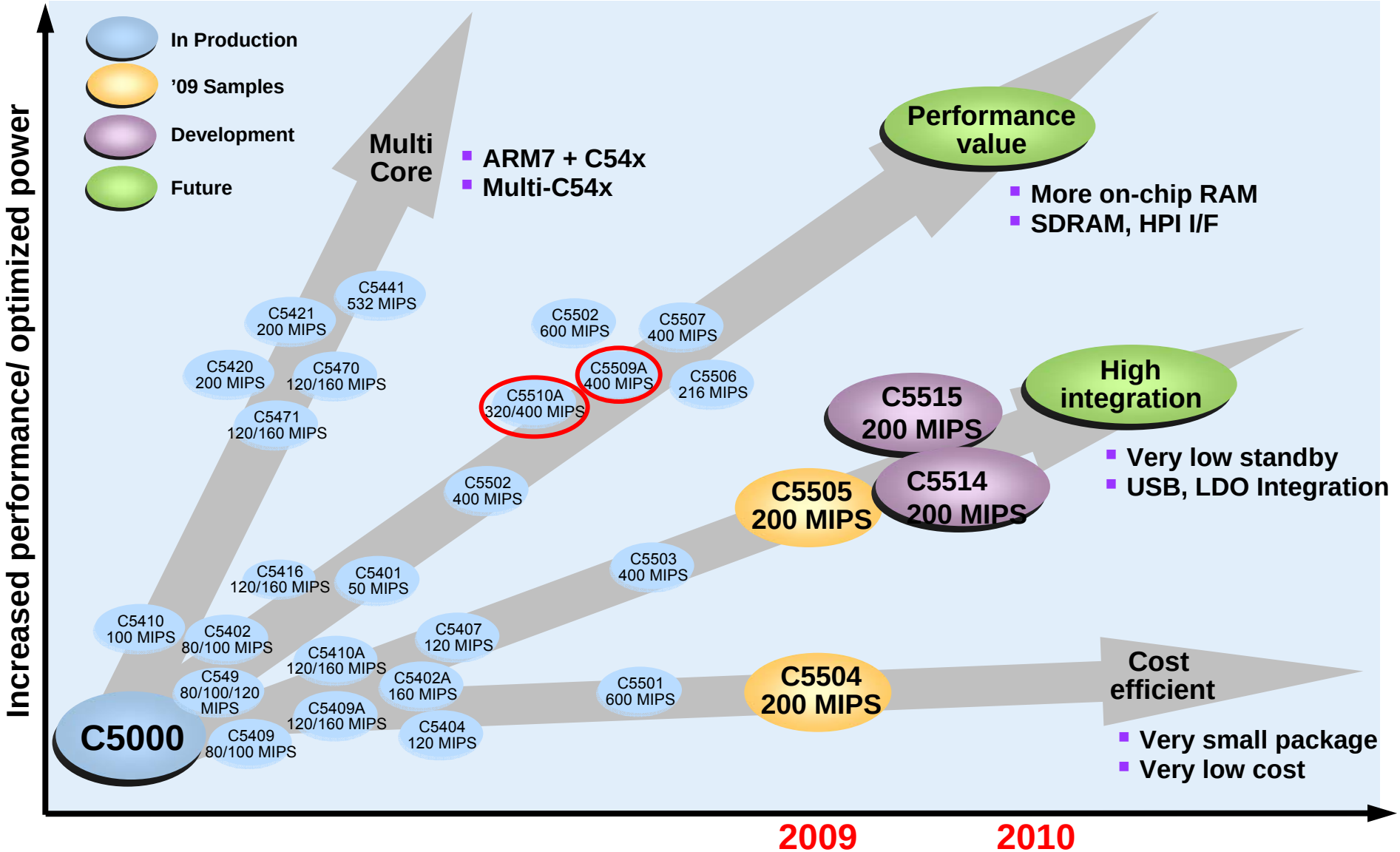

Texas Instruments

TMS320VC5509A DSP

Portable Media/Comm/Audio Device

Features

- Core
  - –Dual MAC; upto 200 MHz; 400 MIPS
- Memory
  - –256-KB On-Chip Memory: 64-KB DARAM, 192-KB SARAM; 64-KB ROM
- Peripherals
  - –USB 2.0 full speed
  - –2 MultiMedia Card/Secure Digital (MMC/SD) serial ports
  - –2/4-channel, 10-bit, 500-ms ADC for keypad, button and battery monitoring functions
  - –3 McBSPs; I²C; 3 timers; 36/35 GPIO, 8/7 dedicated
  - –16-bit HPI MUXed with address bus
  - –Real-time clock with 32-KHz crystal input, separate power

- **Package: 144-Pin LQFP, 179-Pin BGA**
- **In Production Today**

Benefits

- Ideal combination of large on-chip memory and processing speed for optimal data/audio processing capabilities.
- Rich peripheral set allows for more portable connectivity.

Applications

- The C5509A DSP is optimized for multimedia-rich, portable audio devices such as MP3 player/recorder, infotainment devices, gateway and portable medical and biometrics applications.

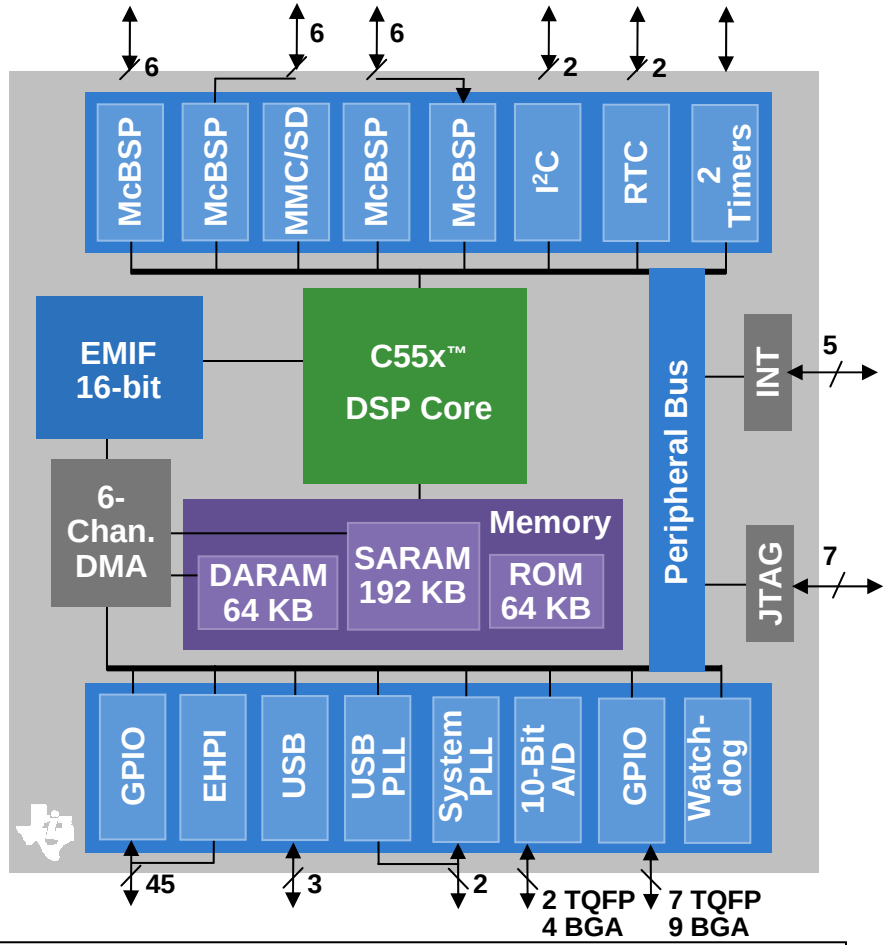

EVM Available DSK Available

Texas Instruments

Some Channel Numbers

- In addition to the DSP devices listed in the prior section, below are some channel numbers of C55-based DSP's. These are devices than can be found in many telecom systems. In case a small channel granularity is needed, these devices offer a good fit.
- Beside the small channel granularity, the available SW is a key benefit for these devices.

Device	**Voice channels (G.729AB, ….)**	**Achievable number of channels heavily depends on the required channel configuration:** **RTP <-> SRTP** **AEC, Echo tail length, conferencing, …..**
TMS320VC5502	Up to 7	
TMS320VC5507	Up to 9	
TMS320VC5509A	Up to 9	
TMS320VC5510A	Up to 7	

Broad Third Party Network to Enable Faster Time to Market

VOCAL TECHNOLOGIES, LTD.

GAO Research Inc.
#1 In Embedded Communications Software

AudioCodes

VoiceAge®

Fraunhofer Institut Integrierte Schaltungen

Algotron

DSP Innovations

MISTRAL
... Partners in Real Time

VOCALLY

Simma Software

COMMETREX

SPIRIT DSP
Voice & Video Engine Experts

VIBNIX

CEntrance

BAYER DSP Solutions

CMX SYSTEMS

mobject
precision data management

WIPRO
Applying Thought

ACOUSTIC TECHNOLOGIES

VINJEY

emPOWER
Empower Technologies

MESi

DELCOM SYSTEMS, INC.

RDSP

ADAPTIVE DIGITAL TECHNOLOGIES, INC.

D.SignT
Digital Signalprocessing Technology

ingenient technologies

Floreat, Inc.
Embedded Multimedia and Communications Software

QSOUND

Snapshield
Keeping Secrets Secret

Candle Dragon

TALON COMMUNICATIONS
ELECTRONIC DESIGN AND MANUFACTURING

DSP WIZARD

Windmill

Vayavya Labs

IntegrIT
Embedding ideas...

ENEA

Applied Signal Processing, Inc.

Netbricks

Agenda

- Introduction
- TI Processor offering
  - Low end
  - Mid range
  - High End
  - Voice attach for data centric Applications
- Other TI devices needed for this type of application
- TI SW offering
- TI partners
- Q&A
- C6472 demo

Need a Power Solution for a TI Device mentioned before?

- Have a look at: http://www.ti.com/processorpower

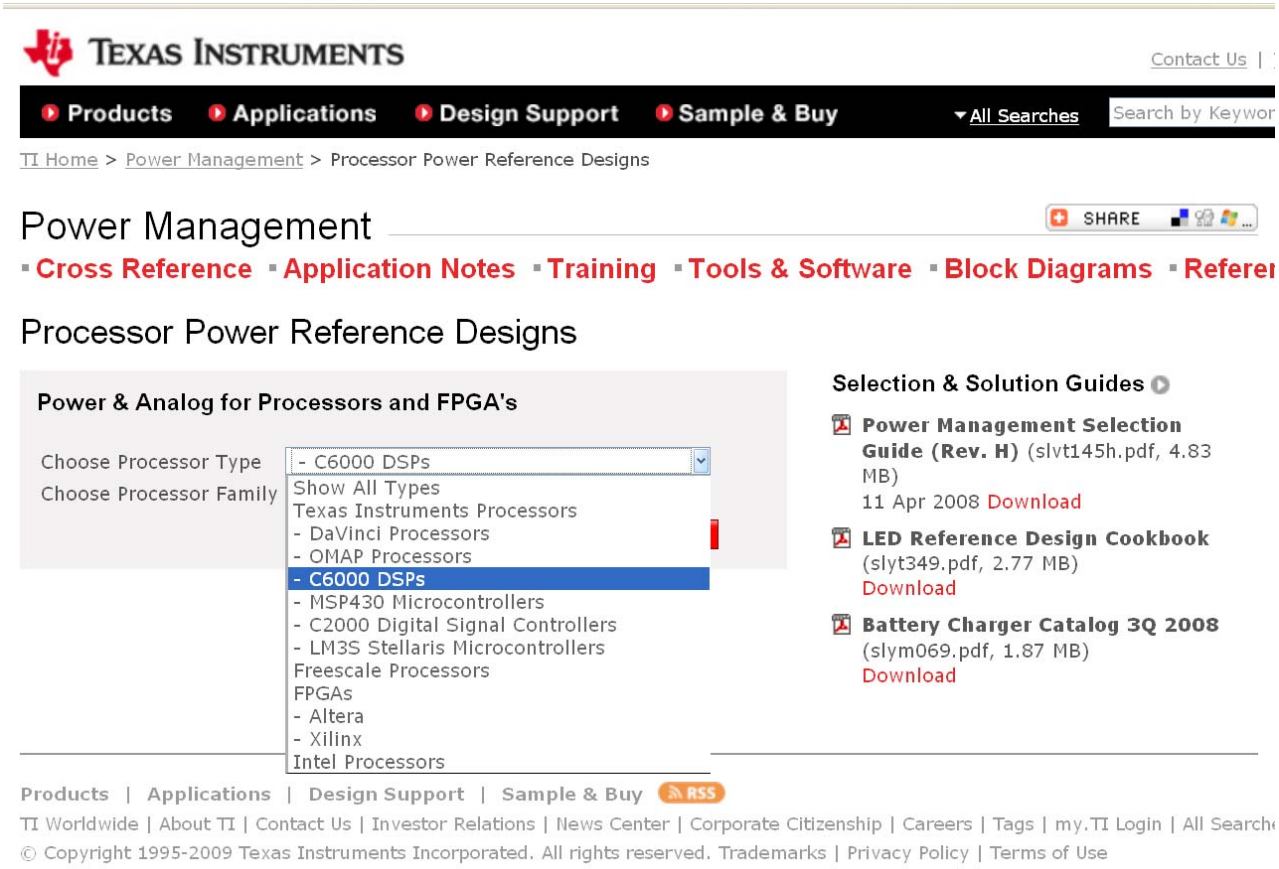

Here is what you find there

TMS320C6474

Power Requirements | Reference Designs | Resources | Related Links to SBDs

Power Requirements for TMS320C6474

Core, I/O	Pin Name	Voltage (V)	Imax (mA)	Tolerance	Sequencing Order	Timing Delay
Core	CVDD	0.9 to 1.2	8,600	±3%	2	All supplies must be stable within 200ms after power ramp begins.
Core	DVDD18, AVDD1_18, AVDD2_18, AIF_VDDR_18, SGR_VDDR_18	1.8	900	±5%	1	
Core	AVDD1_18, AVDD2_18, AIF_VDDR_18, SGR_VDDR_18	1.8	180	±5%	1	
Core	DVDD_11 (AIF_VDDD_11, AIF_VDDA_11, AIF_VDDT_11, SGR_VDDD_11, SGR_VDDA_11,SGR_VDDT_11)	1.1	1,450	±5%	2	

Note:

- All 1.8V rails may be combined and all 1.1V rails may be combined; however, follow the filtering recommendations for each voltage rail in the C6474 Hardware Design Guide (spraaw7).
- Consult the C6474 power spreadsheet for your exact power requirements.
- DVDD18 voltage rail includes power required for external DDR2 memory.

Back to Top of Page

Reference Designs for TMS320C6474

Name	File Name/Size	Date	Download
5V and 12 V Input			
C6474 (x2) Power using Modules	slta058, 108 KB	Sep 2008	Download
C6474 (x4) Power using Modules	slta057, 132 KB	Sep 2008	Download
C6474 Core Power using DCDC Controller with Integrated VID	slva316, 640 KB	Jan 2009	Download

Note: Unless otherwise noted, these reference designs are tested to meet the specs given in the above power specification table.

Back to Top of Page

Selection & Solution Guides

- Power Management Selection Guide (Rev. H) (slvt145h.pdf, 4.83 MB) 11 Apr 2008 Download
- LED Reference Design Cookbook (slyt349.pdf, 2.77 MB) Download
- Battery Charger Catalog 3Q 2008 (slym069.pdf, 1.87 MB) Download

Enterprise or Central Office

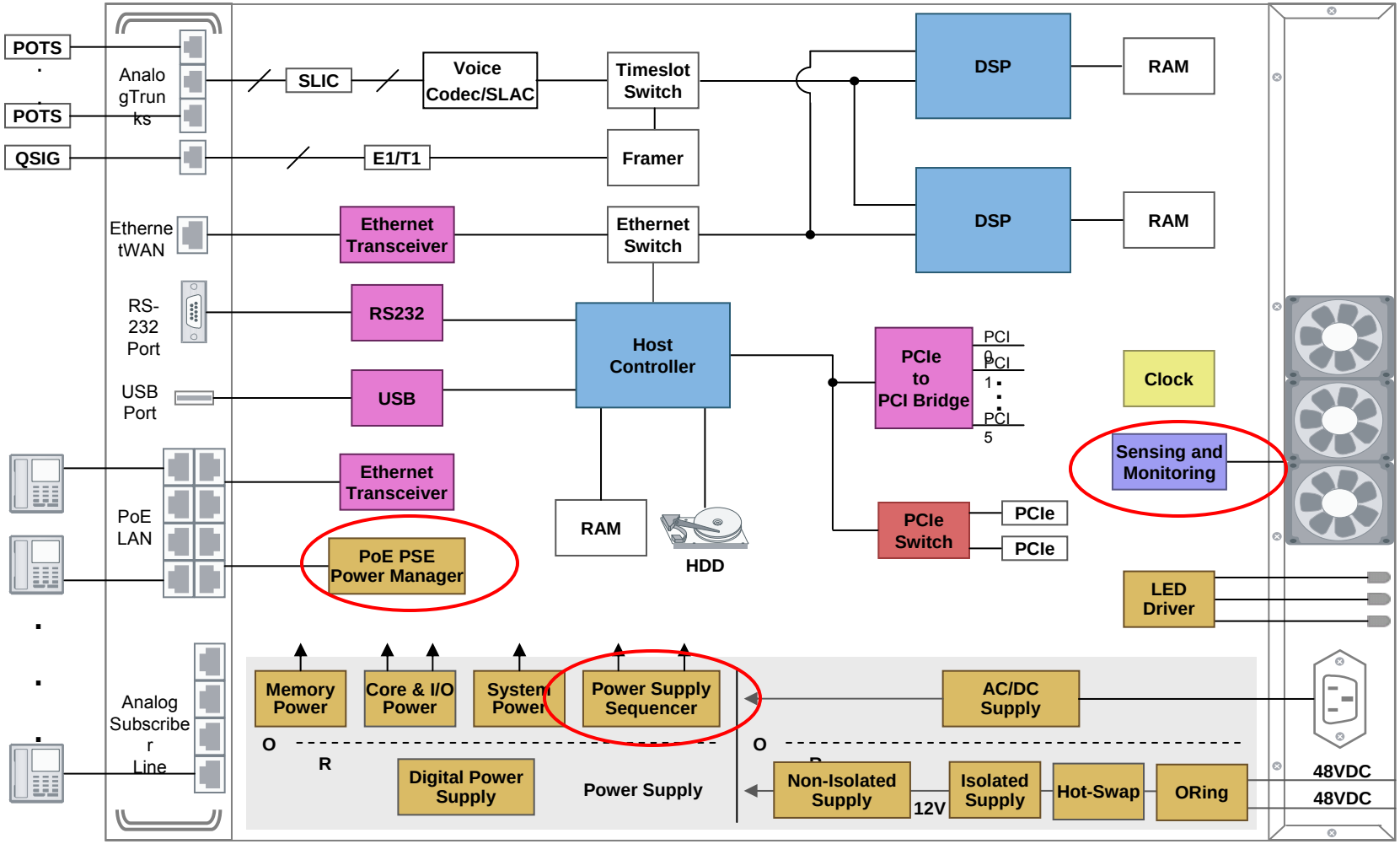

Power over Ethernet at TI

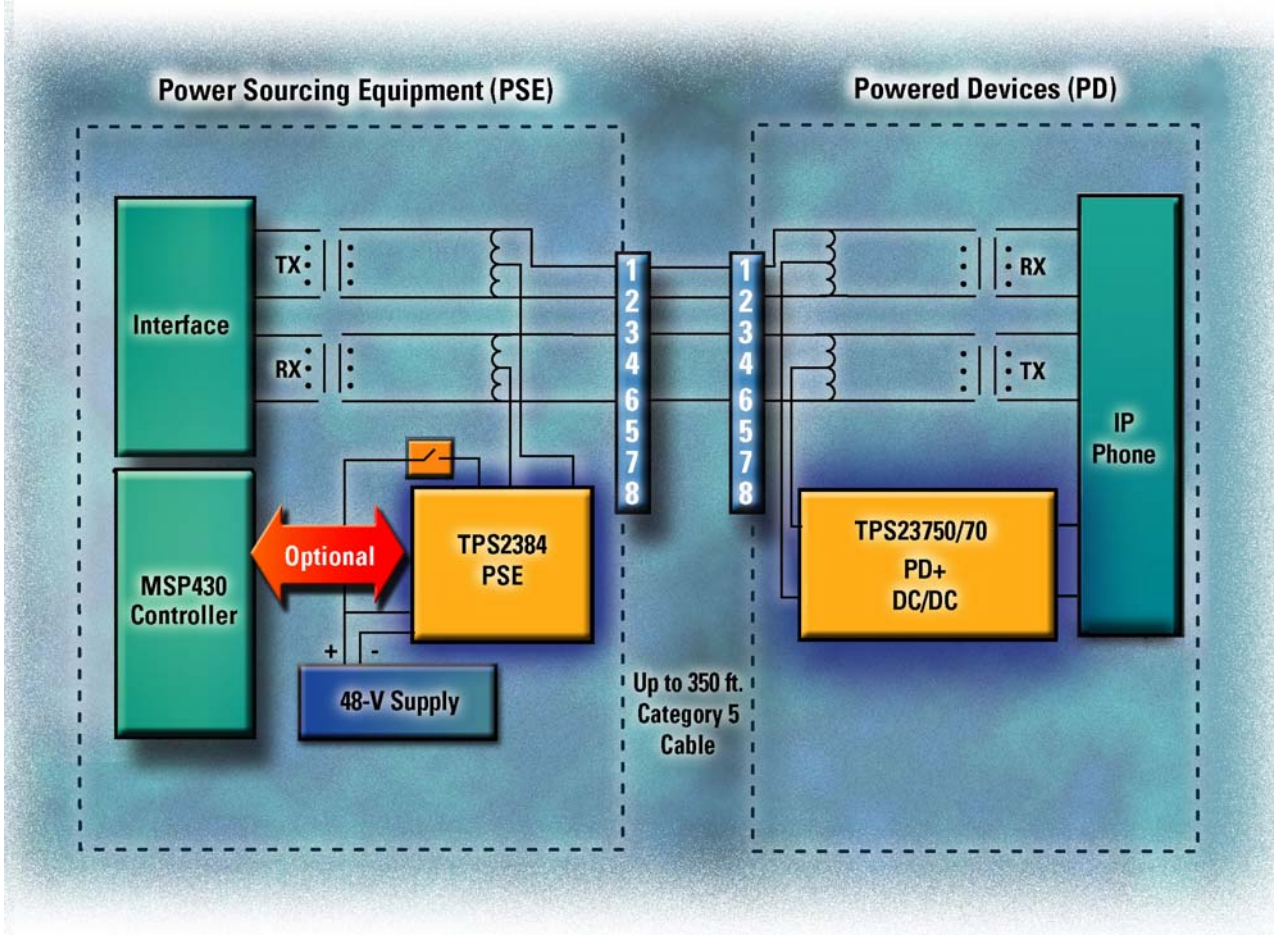

Solutions for both ends of the cable

PD Portfolio

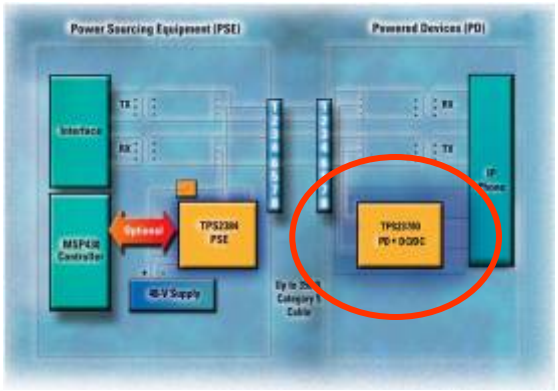

TPS23754/6

- Integrated PD & DC/DC
- 802.3at (25.5W) Power
- '56 → Vin=12-57V
- '54 → Vin=18-57V

TPS23753/7

TPS23750

•Integrated PD & DC/DC
•802.3af (13W) Power
•Std. Eff = '53, Hi Ef. = '57

TPS2375-1

•Integrated PD & DC/DC
•Isolated/Nonisolated Flyback or Buck Converter
•Released Q2/05

TPS2375

•TPS2375 with Auto-restart on Fault
•Released Q2/05

TPS2376-H

•High Current PD Controller
•26W IEEE 802.3af
•100V Robust Process
•Released Q3/06

TPS2370

•Full STD Compliant
•100V Robust Process
•Latch off on Fault
•Released Q3/04

•Pre-Standard
•70V CMOS
•Released Q2/03

TPS23753

New Product!

PoE Powered Device (PD) with DC-DC Converter

Features

- Integrated control for PD power
- Optimized for 13W
- Optimized for isolated topologies
- Adapter priority programming
- 12V to 57V Local/Auxiliary Power Rails
- Current and inrush limit
- Switched detection resistor
- Adjustable PWM frequency to 1MHz
- 100V SOI process

Benefits

- Single part IEEE 802.3-2005 compliant system
- Optimized for 90+% of PD applications
- Most popular PoE DC-DC converter choice
- Preferred power source fully selectable
- Supports most common local power adapter types
- Simplifies DC-DC design and IEEE compliance
- More power to application, less to waste
- Minimizes EMI for RF sensitive designs
- Rugged high voltage parts for low customer returns in even the harshest environments

Applications

- IEEE 802.3af-2005 compliant:
  - VoIP telephones
  - Access points
  - Security cameras
  - RFID Readers

Package: 14-pin TSSOP

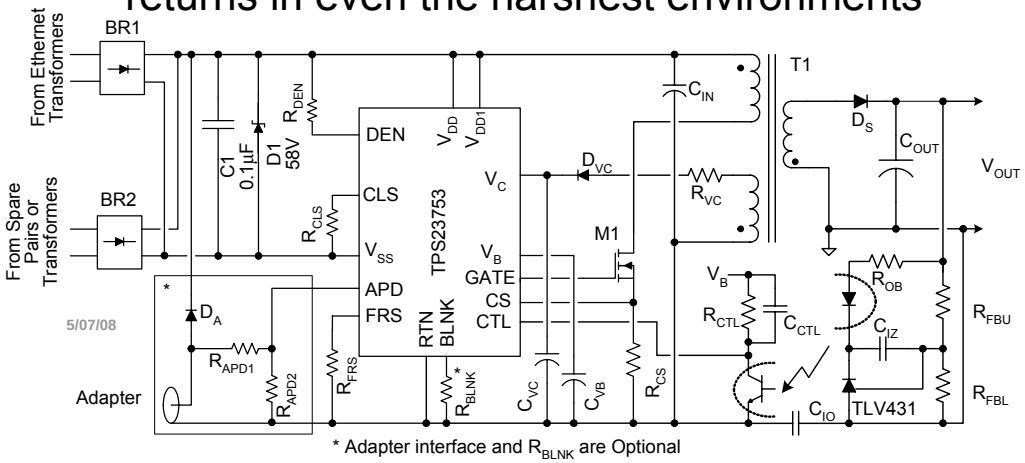

TPS2376-H High Power PD

Features

- Complete 802.3af PoE Interface
- Features derived from the TPS2375
- **Permits 26W high power designs**
- Adjustable turn-on threshold
- Compatible IEEE802.3at Layer 2 recommendations
- Integrated 0.58Ω, 100V Low-side switch
- 15kV ESD compatible
- Over current and over temperature protection
- Open drain power good output
- Industrial temperature range
- PowerPad SOIC-8

Applications

- Video IP Phones
- WiMax Access Points
- Security Cameras with P/T/Z
- Internet Appliances
- POS Terminals

Benefits

- Twice the 802.3af (13W) power
- Any high voltage supply can be used
- Low resistance allows more power
- More robust than competitors
- 24V for Industrial and Medical
- DC/DC topology agnostic
- Pathway to P802.3at PDs
- Familiar SOIC-8 PD footprint
- Enhanced package thermal performance

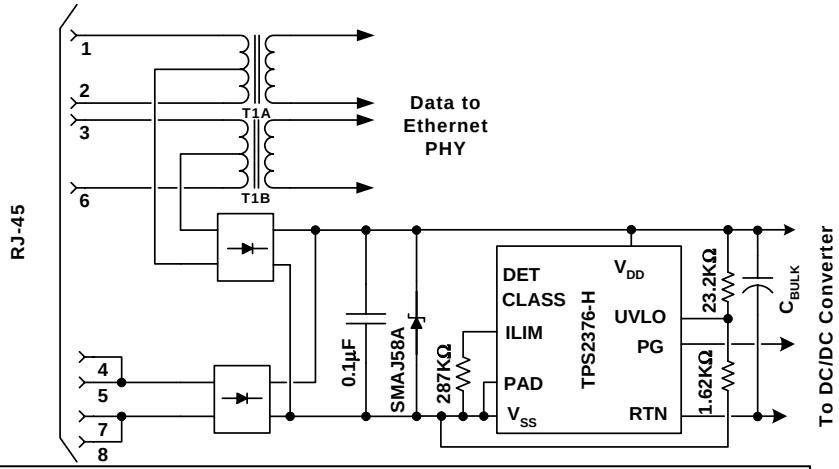

TPS2384: Quad Ethernet Power Sourcing Equipment Power Manager

Features

- Quad PSE Controller
- Integrated 80V FET Switches
- Total series resistance of 1.5Ω
- Operates from a single 48V supply
  - Produces 3.3V and 10V outputs
- Four 12-bit A/Ds for real time voltage, current & temp measurement
- AC & DC disconnect
- Watchdog Timers for Comm. & Osc.
- Current and inrush limit
- Thermal and overload protection

Applications

- Ethernet Switches
- Ethernet Routers
- Midspan PSEs
- Storage Routers

Benefits

- Fully integrated PSE solution
- Reduced external B.O.M.
- Low thermal footprint
- Feedback for complete power management
- UNH and externally verified
- Protection for external and internal systems failures
- Software compatible with TPS23841

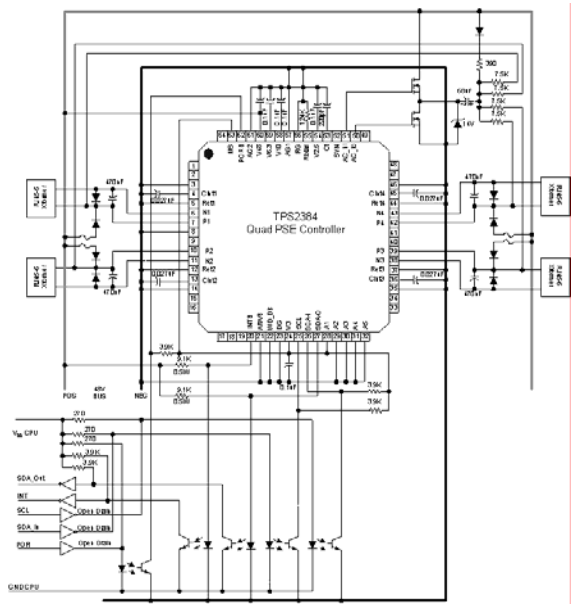

Texas Instruments

PoE Portfolio

16 PD products in production today, most in the industry

Selection Guide

Device	Description	Detection	Classification	Abs Max V_{IN} (V)	Operating Temp (°C)	Full Inrush Current Limiting	Current Limit (mA)	Auto Retry or Latch Off in Fault	UVLO	DC/DC Interface	Package	Price*
Power-over-Ethernet (PoE) Powered Device (PD) Interface Switches												
TPS2375	Powered Device Controller	4	Yes, Class 0-4	100	–40 to 85	Programmable	450	Latch Off	802.3af (30.6/39.4 V)	PG	SOIC-8, TSSOP-8	1.25
TPS2375-1	Powered Device Controller	4	Yes, Class 0-4	100	–40 to 85	Programmable	450	Auto Retry	802.3af (30.6/39.4 V)	PG	TSSOP-8	1.25
TPS2376	Powered Device Controller	4	Yes, Class 0-4	100	–40 to 85	Programmable	450	Latch Off	Adjustable	PG	SOIC-8, TSSOP-8	1.25
TPS2377	Powered Device Controller	4	Yes, Class 0-4	100	–40 to 85	Programmable	450	Latch Off	Legacy (30.5/35.0 V)	PG	SOIC-8, TSSOP-8	1.25
TPS2377-1	Powered Device Controller	4	Yes, Class 0-4	100	–40 to 85	Programmable	450	Auto Retry	Legacy (30.5/35.0 V)	PG	SOIC-8	1.25
TPS23750	Integrated PD with PWM Controller	4	Yes, Class 0-4	100	–40 to 85	Fixed	450	Auto Retry	802.3af (30.6/39.4 V)	N/A	TSSOP-20	1.75
TPS23770	Integrated PD with PWM Controller	4	Yes, Class 0-4	100	–40 to 85	Fixed	450	Auto Retry	Legacy (30.5/35.0 V)	N/A	TSSOP-20	1.75
PTB48540	5 V, 10-W PoE Power Module	4	Yes, Class 0-4	100	–40 to 85	Fixed	450	Latch Off	802.3af (30.6/39.4 V)	N/A	13-DIP Module	26.00

Device	Applications	Channels	Abs Max V_{IN} (V)	Operating Temp (°C)	IEEE Compliant	Interface	Disconnect	Measurements	Power FET	Package	Price*
PoE Power Sourcing Equipment (PSE) Controllers											
TPS2383B	Routers, switches, hubs, mid-spans	8	80	–40 to 85	Yes	I^2C	Both AC and DC	Current, voltage and capacitance	External	64-pin LQFP	7.35
TPS2384	Routers, switches, SOHO hubs, mid-spans	4	80	–40 to 125	Yes	I^2C	Both AC and DC	Current, voltage, capacitance and temperature	Internal	64-pin LQFP	3.90

**Suggested resale price in U.S. dollars in quantities of 1,000.*

*New devices are listed in **bold red**.*

For additional resources on PoE, including reference designs and evaluation modules, please see power.ti.com/poe

Highly integrated 8-port and 4-port PSE's
Only TI provides choice of integrated or external FETs

>26 Million PoE Ports Shipped

Supervisors & Sequencers portfolio

Supervisory Circuits (Voltage Supervisors) and Sequencers Family of Products

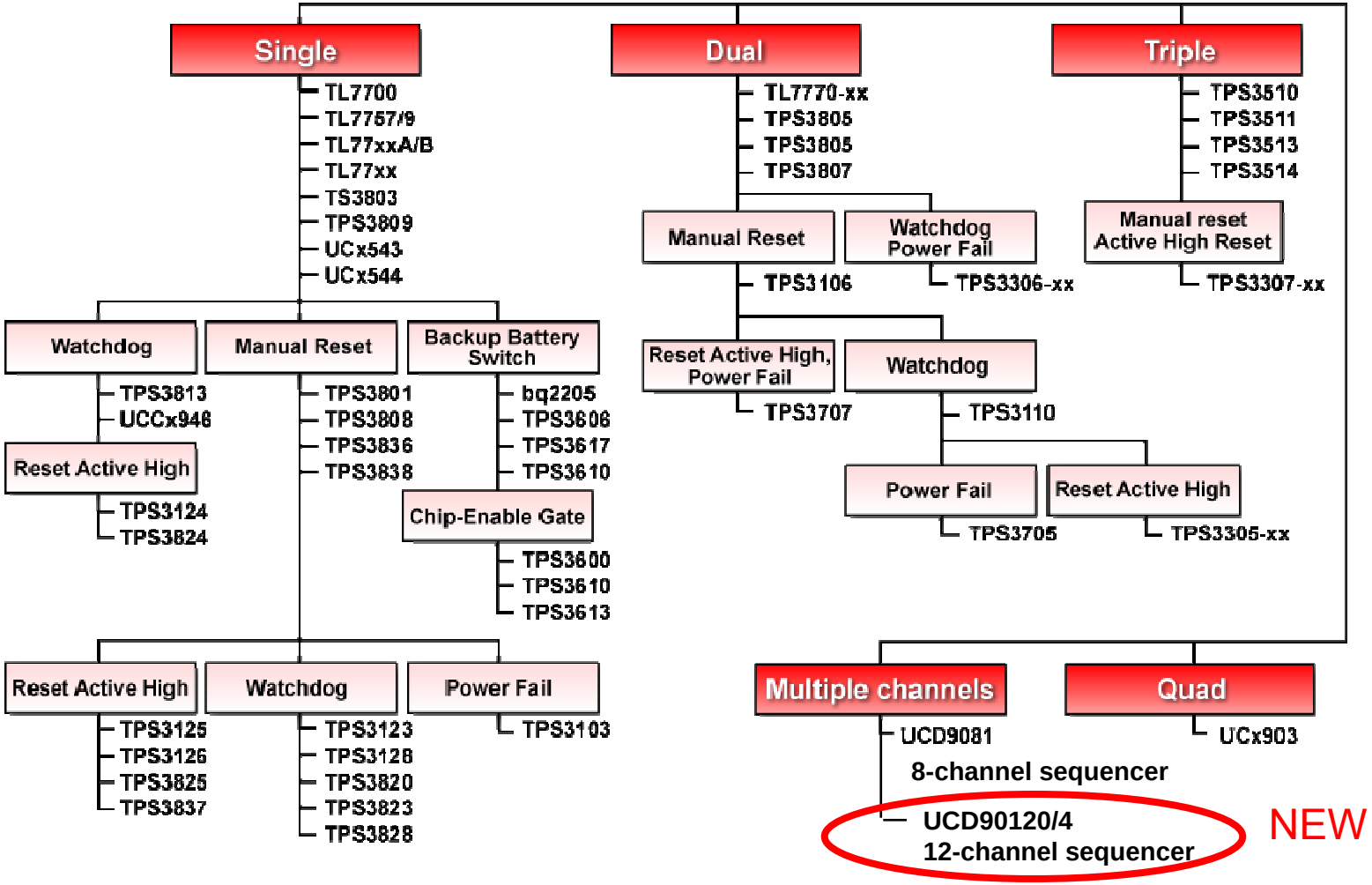

For more information, pls go to www.ti.com/svs

UCD90120/4
12-Channel Sequencer and Health Monitor

Features

Sequence
- Sequence on and off up to 12 Rails
- Dependencies on time, parent rails, GPIs, and I2C
- Independent Turn and Turn off configurations
- Flexible GPIO for Enables, Power Goods, and more
- BOOLEAN Logic Builder

Monitor
- Detect OV and UV power supply warnings and faults
- Respond to faults by configuring retries, shutdown delays, and slave rails to shutdown
- User settable scale factors convert to actual system units including voltage, current, and temperature
- 6 optional comparators for fault response in < 80 us
- Non-Volatile fault and peak logging for aid in failure analysis

Margin
- Simultaneously margin up to 10 rails using PWM outputs
- Support for open-loop or closed-loop methods
- Command rails high and low using I2C or control pins
- All unused margining outputs can be used as GPIO

Applications

- Any system requiring sequencing and monitoring of multiple power rails
- Telecom, servers
- Industrial / ATE

Benefits

- **Sequencing:** flexible ramping of multiple rails
- **Monitoring:** Detect power supply warnings and faults. Also with non-volatile memory for failure analysis.
- **Margining** for pre-production equipment testing
- Both JTAG and PMBus **communication interfaces**
- **UCD90124 release in 4Q09: with fan control**
- TI's ***Fusion Digital Power GUI***: easy-to-use tool offering intuitive graphical interface for configuring, storing and monitoring all system parameters.

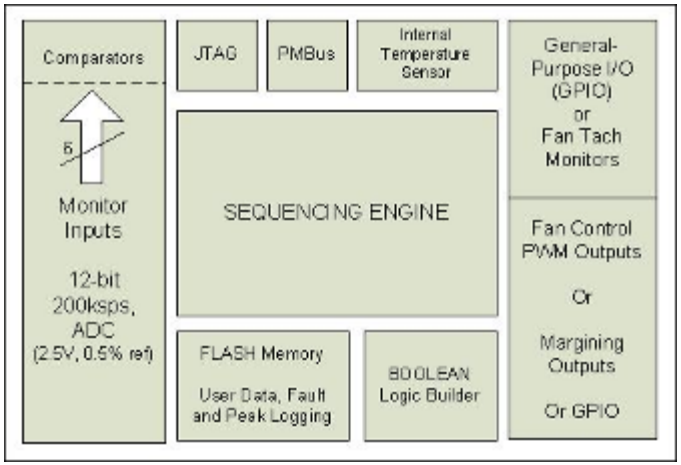

Fusion Digital Power Designer GUI

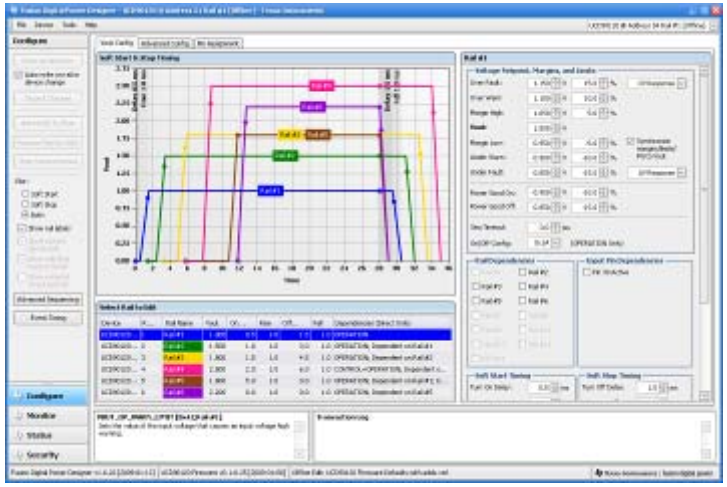

Sequencing

Monitoring

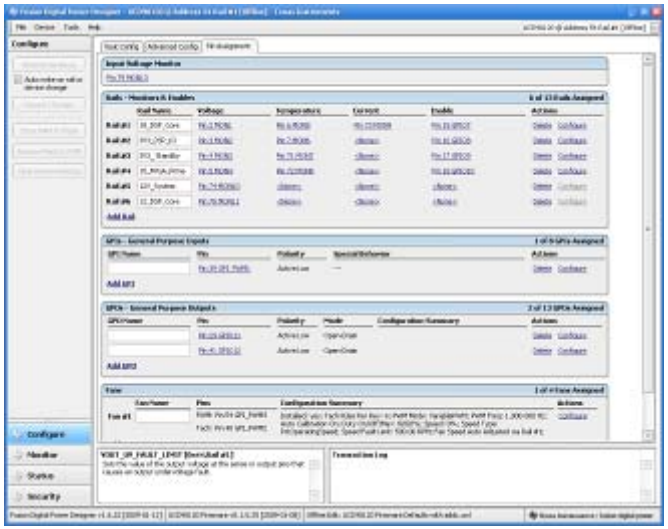

I/O Configuration

This software/ GUI is available for downloading!
Check the UCD90120 product folder.

AMC6821-
Intelligent Temperature Monitor and PWM Fan Controller

Features

- Two Temperature Sensors with Parasitic Resistance Cancellation:
  - Remote: +50 °C - +100 °C; ±2 °C
  - Internal: +50 - +100 °C; ±2 °C
  - Resolution: 0.125 °C
- Fan Speed Control
  - Intelligent Temp – Fan Control
  - Software-RPM (RPM Regulator)
  - Software-DCY (Manual Setting)
- PWM Cooling Fan Driver:
  - 8-bit ; 10Hz - 40 KHz
- Fan Speed (RPM) monitoring
- SMBus Interrupt
- Alarms:
  - Fan-Fault; THERM; Over-Temp.
- SMBus with 9 Addresses
- Supply Voltage: 2.7 – 5.5 V
- Small Packaging: 16-SOP

Benefits

- Parasitic Resistance Cancellation – Improve Remote Temp
- Intelligent Fan Control - Intelligently manage System thermals/acoustics; Control Fan even no CPU intervention.
- 25KHz PWM Fan Driver - NO Audible PWM Switch Noise
- Alarm Pins – Instantaneous alarms and Forcing Fan to Full Speed to Protect the System.

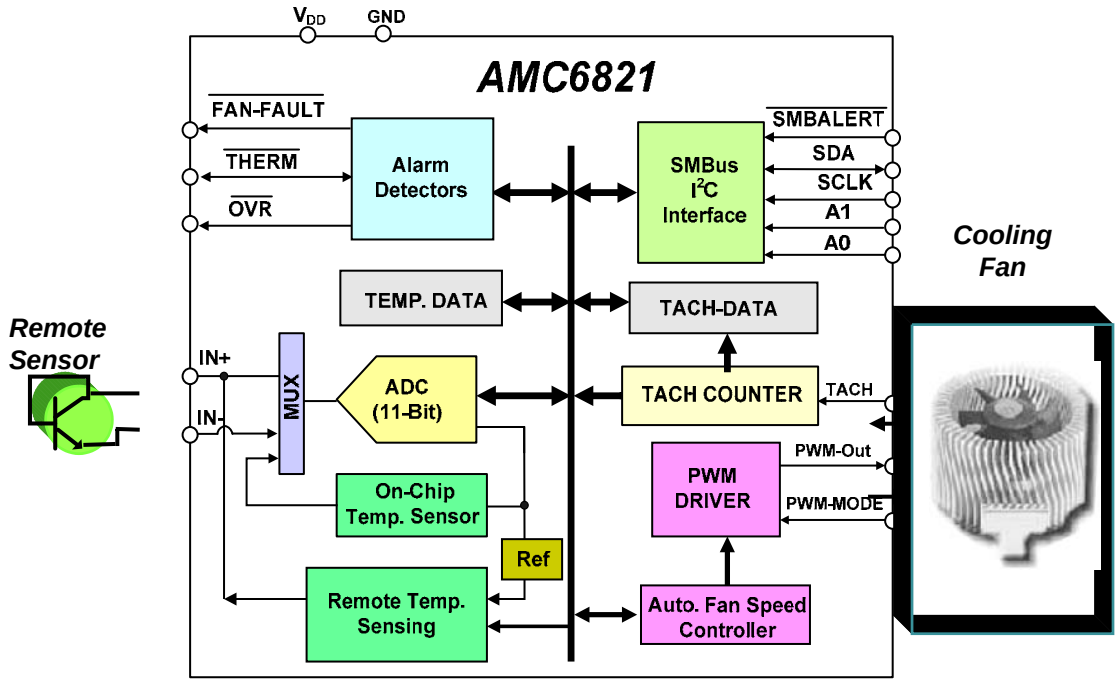

Applications

- PC and Network Server
- DLP / LDC Projector and TV
- Communication Equipment
- PC Based Equipment

Even More Options to Monitor and Control Your Board

- In addition to the devices mentioned before and in case a solution with even higher flexibility and programmability is needed, have a look at:
  - The Stellaris Portfolio
  - The MSP430 Portfolio

Agenda

- Introduction
- TI Processor offering
  - Low end
  - Mid range
  - High End
  - Voice attach for data centric Applications
- Other TI devices needed for this type of application
- TI SW offering
- TI partners
- Q&A
- C6472 demo

What is available from TI

- Standard SW development tools
  - E.g. Code Composer Studio
  - Platform support Packages
- For voice application
  - C64x voice codec's are available on request today
  - Before e/o 09 the majority will we made available on the TI web for download.
- How to request FREE TI Software
  - Go to : http://www.ti.com/requestfreesoftware

http://www.ti.com/requestfreesoftware

		More Info																						
Software		Video								Imaging		Speech		Audio										Other
This TI-developed software is now free. Production quality. Production clickwrap licensing.	Available	H.264 Enc	H.264 Dec	MPEG-4 Enc	MPEG-4 Dec	MPEG-2 Enc	MPEG-2 Dec	VC-1 Dec	VICP Library	JPEG Enc	JPEG Dec	G.711 Enc	G.711 Dec	AAC HE Enc	AAC HE Dec	AAC LC Enc	AAC LC Dec	MP3 Enc	MP3 Dec	WMA Enc	WMA Dec	AEC	AC3 Dec	NDK
Codec Servers for OMAP and DaVinci devices - include TI Codec Engine, etc. CODEC SERVERS FAQ: http://tiexpressdsp.com/index.php/Codec_Servers_FAQ																								
OMAP35x Codec Server	Download *on DVSDK page*	●	●	●	●		●			●	●	●	●		●									
DM646x Codec Server Export approval required	Download *on DVSDK page*	●	●				●		● HD			●	●	●	●									
DM644x Codec Server	Download *on DVSDK page*	●	●	●	●		●					●	●		●									
Additional Codecs – The following either are NOT included in the above Codec Servers, or may be more recent versions. None of the following include Codec Engine, etc. CODEC BUNDLES FAQ: http://tiexpressdsp.com/index.php/Codec_Servers_FAQ																								
C64x+ AUDIO DSP Codec Bundle Free with license terms Export approval required	Request ☐											●	●	●	●	●	●		●	●	●			
C64x+ MP3 AUDIO Decoder Free with license terms Export approval required	Request ☐																		●					
C64x+ JPEG Encode	Download									●														
C64x+ JPEG Decode	Download										●													
C64x+ MPEG4 Decode	Download				●																			
DM646x H.264 BP Encode	Download	●																						
DM646x H.264 BP/MP/HP Decode	Download		●																					
Ittiam: DM644x VIDEO Evaluation Codecs Free with license terms To purchase production code, contact Ittiam	Request ☐			● ASP	● ASP																			
Ittiam: DM644x AUDIO Evaluation Codecs Free with license terms To purchase production code, contact Ittiam	Request ☐					● L1 L2	● L1 L2											● HS LS						
DM644x/647/648 VICP Library	Download								●															
DM365 Codecs	Download *on DVSDK page*	●	●	●	●					●	●													
DM355S AUDIO Codec Bundle Free with license terms	Request ☐															●	●	●	●	●	●	●		
DM648 BASIC Codec	Request	●	●		●		●			●	●	●	●											●

eXpressDSP™ Software and Development Tools

What does "eXpressDSP" mean?

- ***eXpress*** **is fast…slash development time**
- ***eXpress*** **yourself…spend your valuable time differentiating**

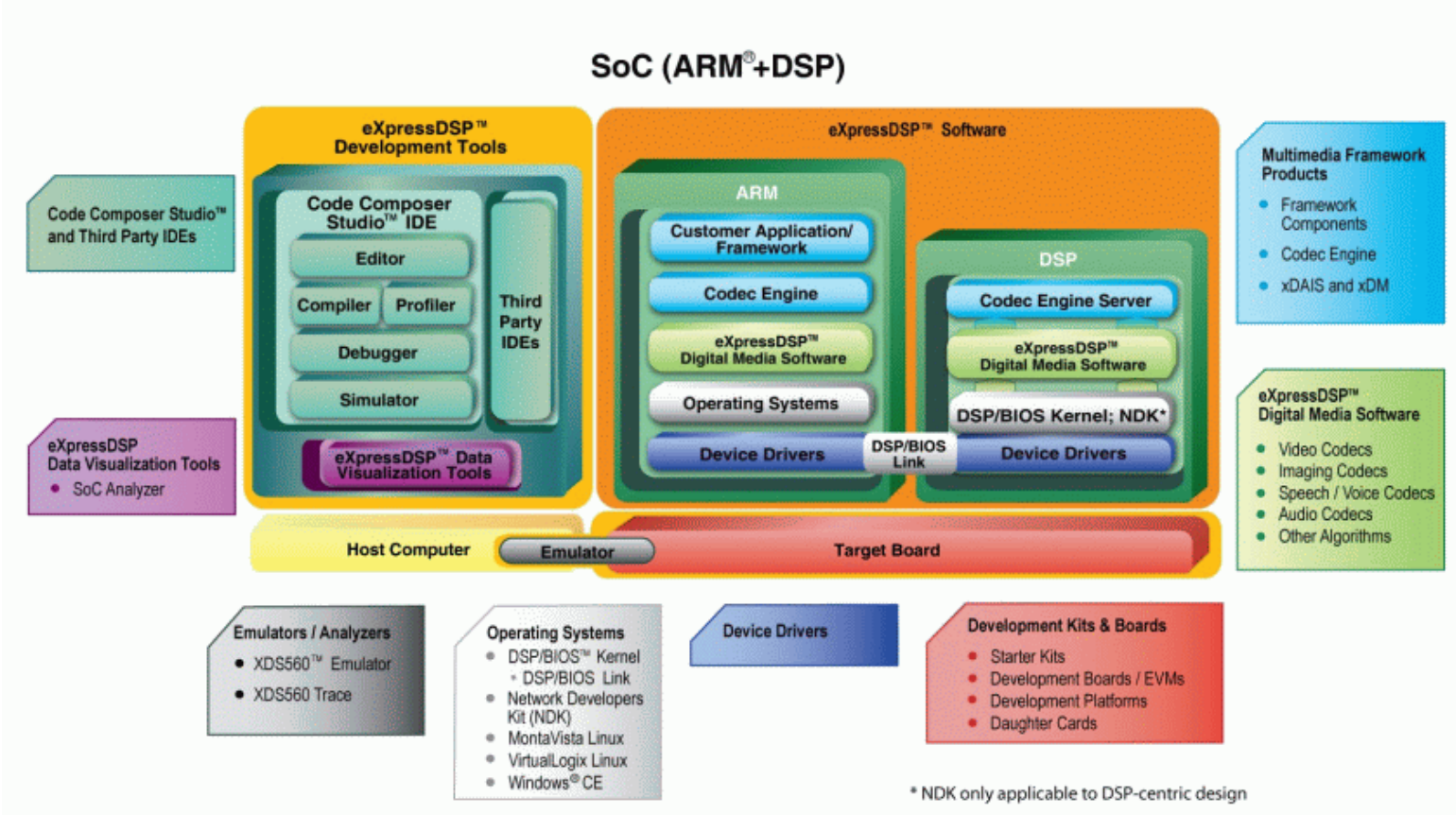

Code Composer Studio™ IDE

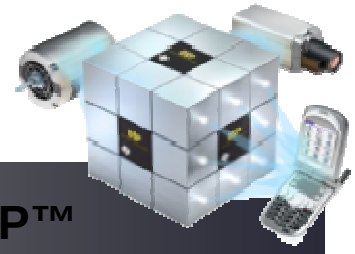

C6000™ C5000™ C2000™ DaVinci™ OMAP™

www.ti.com/ccstudio

- Point-and-Click IDE
- CodeWright Editor
- Project Manager
- Best-in-class C/C++ DSP compiler
- Real-time analysis
- Multi-processor/platform debug
- Parallel and system level debug
- Rich set of optimization, tuning, profiling and analysis utilities
- Fast simulators

Many additional IDEs and development tools available from TI third-party developers

- GreenHills Software, CodeSourcery, MontaVista, Microsoft, Lauterbach, ARM

All TI platforms in one easy-to-use IDE

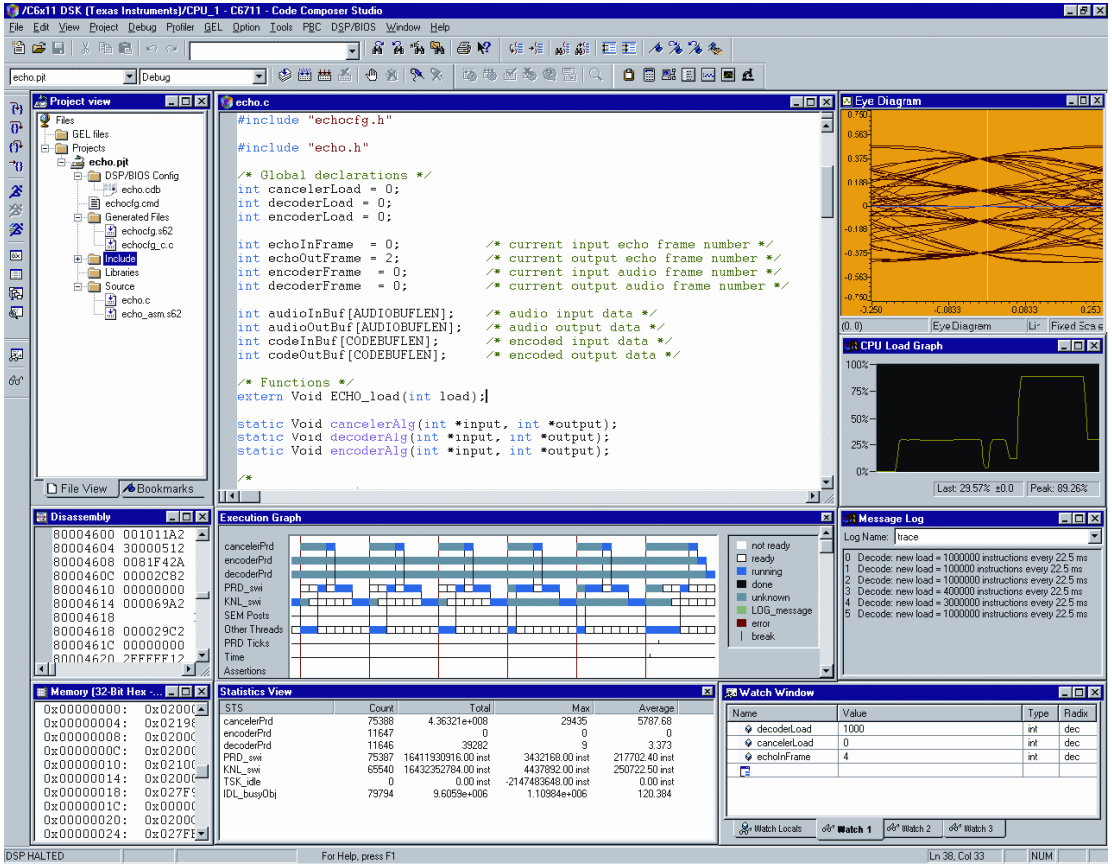

Available Codec's

Codec	C55	C64x+
G.711	x	x
G.711 Appendix I	x	x
G.711 Appendix II	x	x
G.722	x	x
G.722.1	x	x
G.722.2/WB-AMR	x	x
G.726	x	x
G.723.1	x	x
G.723.1 Client	x	x
G.728	x	x
G.729AB	x	x
G.729G	x	x
GSM-AMR	x	x
GSM-FR	x	x
GSM-EFR	x	x
EVRC	x	x
SMV	x	x

Free Codec's from TI

Codec	C55	C64x+
G.711	x	x
G.711 Appendix I	x	x
G.711 Appendix II	x	x
G.722	x	x
G.722.1	x	x
G.722.2/WB-AMR	x	x
G.726	x	x
G.723.1	x	x
G.723.1 Client	x	x
G.728	x	x
G.729AB	x	x
G.729G	x	x
GSM-AMR	x	x
GSM-FR	x	x
GSM-EFR	x	x
EVRC	x	x
SMV	x	x

Available on the Web e/o 2009

What about G.723 and G.729?

- Due to essential patents involved, these can't be made available on the web.
- Nevertheless TI can provide these codec's on request under a dedicated license agreement.
- If the business case allows, TI can also help with the essential patent indemnification. In this case the TI codec's have to be used and the customer needs to agree to work with a TI-recommended 3rd Party on the integration.

Essential Patent Indemnification

G.729 or G.729 Combined with Annex A

All Prices in US dollars

Option 1 - Royalty Based

Initial Fee: $15,000

Cumulative Unit Royalty per Channel per Licensed Product Sold

Number of Channels	Unit Royalty
<100K	$1.45
100K-500K	$1.30
500K-1M	$1.00
1M-3M	$0.80
3M-5M	$0.70
5M-10M	$0.50
>10M	$0.30

Royalty Cap

Introduction of a yearly cap (maximum amount paid yearly) fixed at:

$750,000.00

Minimum Annual Royalty (applicable at the end of the second year) $7,500

Source: http://www.sipro.com/g729_licterms.php

Essential Patent Indemnification
- How does it work

Agreement Flow

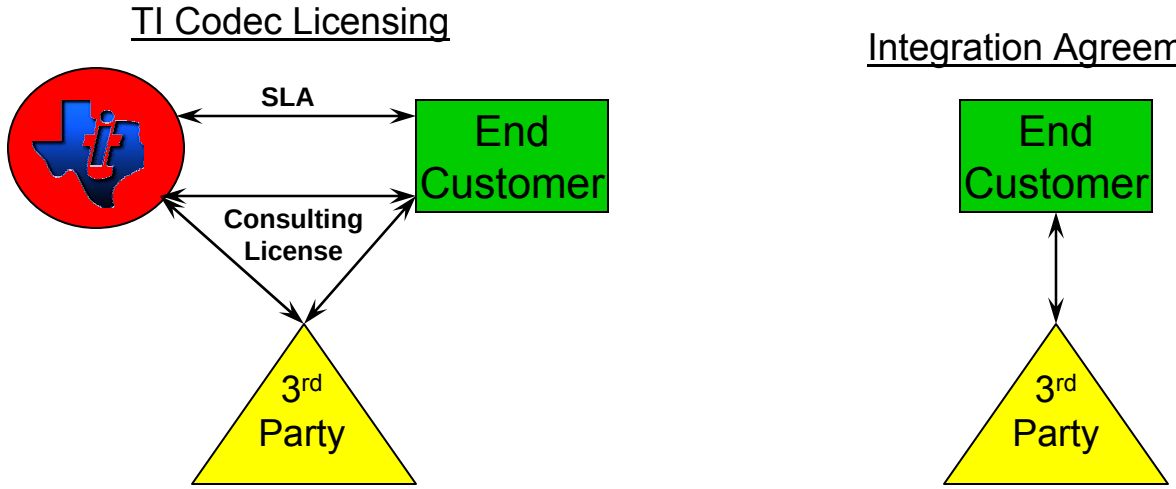

Code Delivery Flow

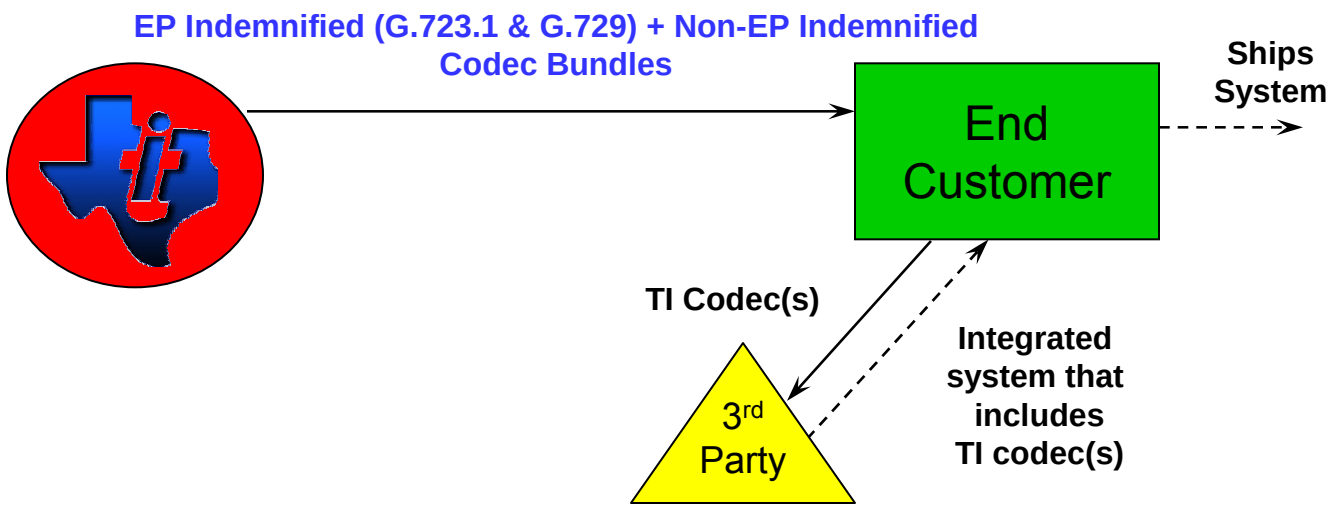

Agenda

- Introduction
- TI Processor offering
  - Low end
  - Mid range
  - High End
  - Voice attach for data centric Applications
- Other TI devices needed for this type of application
- TI SW offering
- TI partners
- Q&A
- C6472 demo

IntegrIT
Embedding ideas...

IntegrIT

Embedded Software Design House

- **IntegrIT Ltd.**
- **www.integrIT.ru**
- **info@integrIT.ru**
- **tel: +7 903 545-45-52**
- **Kolpakova str. 2, Techno Park “Novoe Vremja” Mytischi, Moscow, Russia, 141008**

Texas Instruments

IntegrIT
Embedding ideas...

Company Technology

- ***Voice over IP***

- ***DSP - digital signal processing***

- ***SDR - Software Defined Radio***

- ***Embedded Software Development***

Voice Over IP: PABX

Licensee's PABX with IntegrIT's VoIP software inside

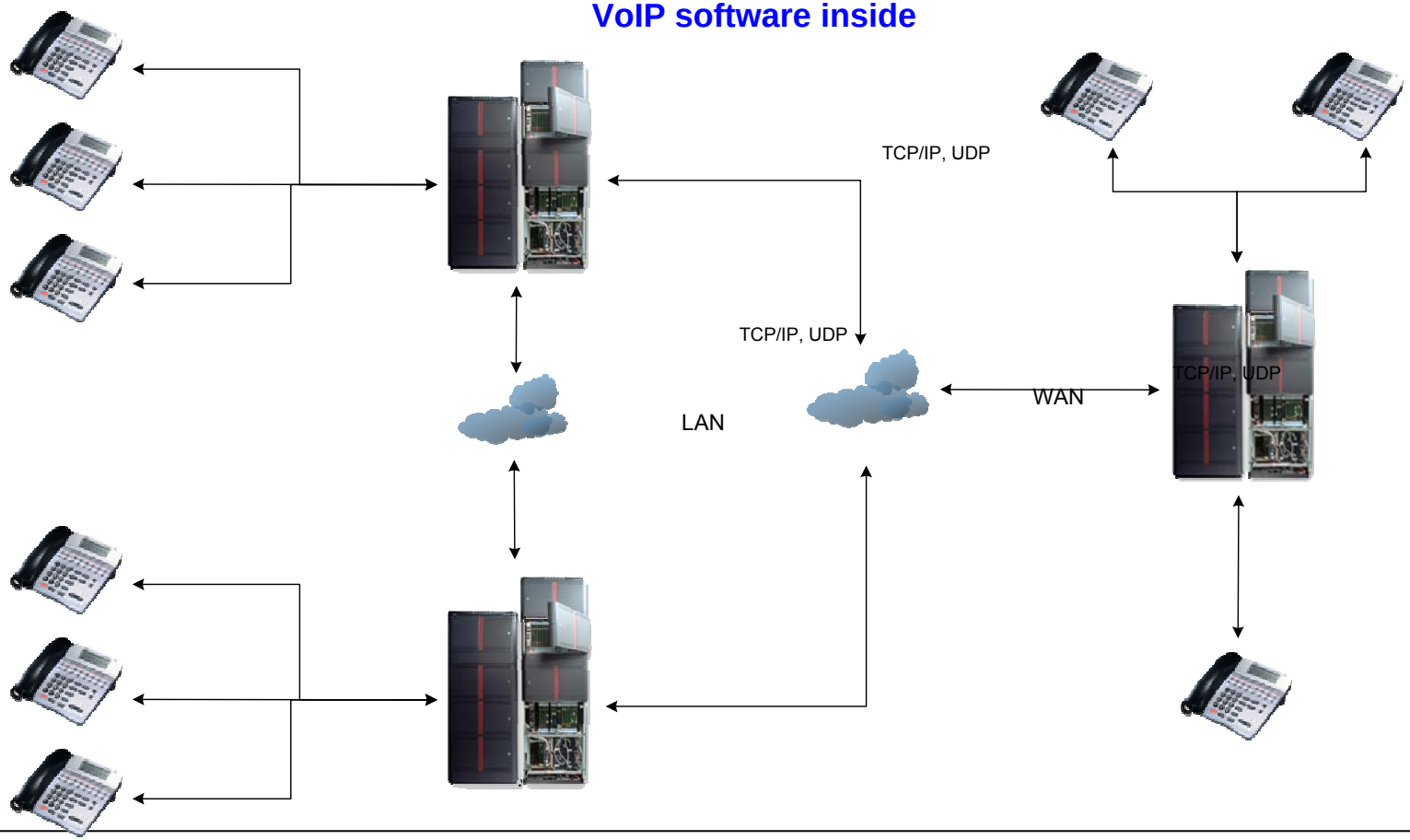

VoIP accelerator

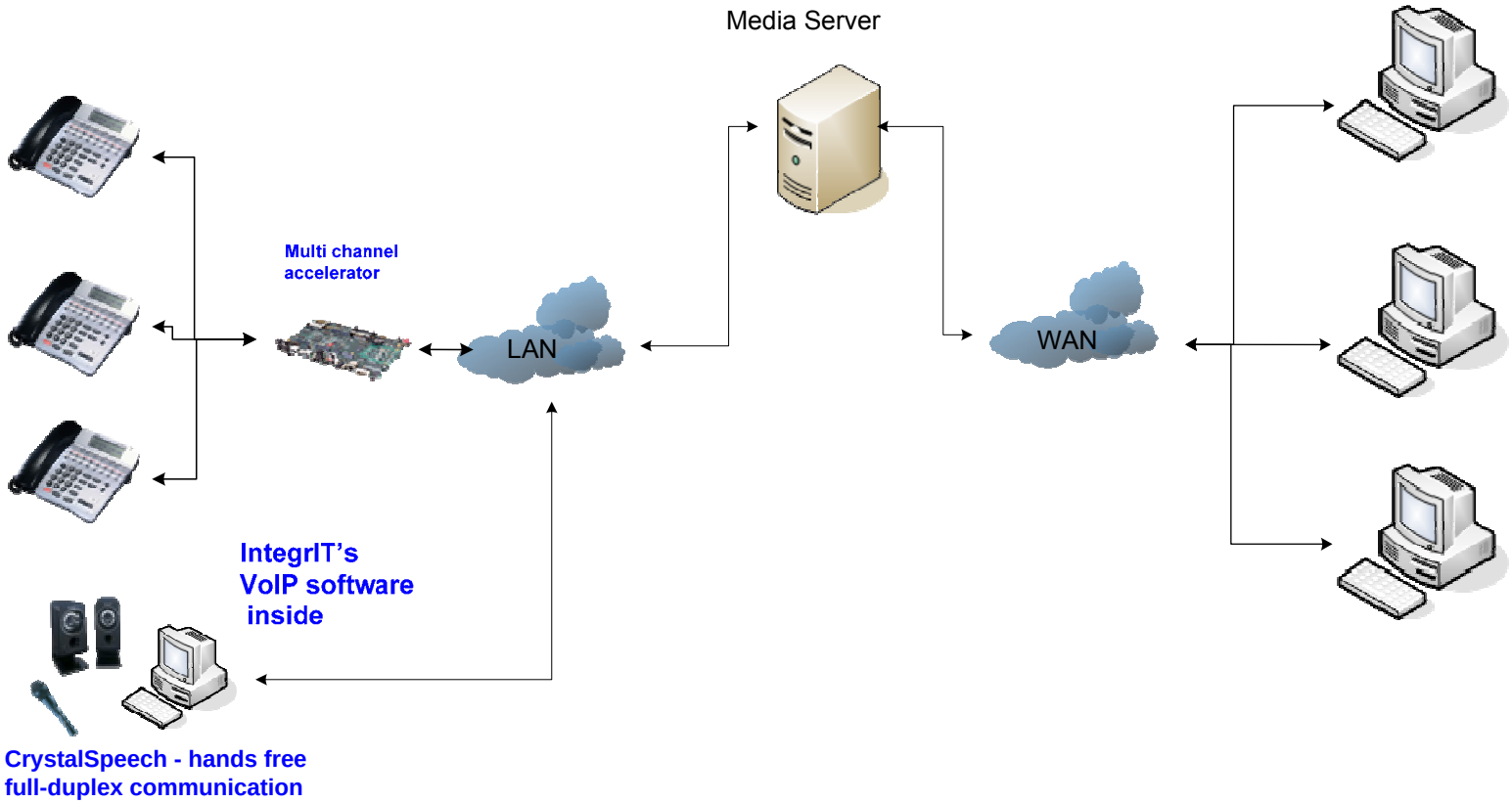

Thank You!

Questions?

Agenda

- Introduction
- TI Processor offering
  - Low end
  - Mid range
  - High End
  - Voice attach for data centric Applications
- Other TI devices needed for this type of application
- TI SW offering
- TI partners
- Q&A
- C6472 demo

TMDXEVM6472

Low-Cost Multicore EVM for TMS320C6472

Texas Instruments

Development tools and support ease customer migration

C6472 Evaluation Module

Software debug platform for high performance application development

EVM highlights:

- Single C6472 processor
- 256MB of 533MHz DDR2
- 128MB Nand Flash
- 1Mb I2C EEPROM for local boot (remote boot possible)
- 2 RGMII 10/100/1000 Ethernet ports with MDIO
- RS232 UART
- Single module 170-pin AMC expansion for SRIO, TSIP, EMAC1 and I2C
- C6455 EVM pin-compatible HPI daughtercard connector
- 2 user programmable LEDs and DIP SWs
- 14-pin JTAG emulator header
- XDS100 USB embedded emulation
- Board-specific Code Composer Studio™ CCSv4.0.2 Integrated Development Environment
- Simple setup
- Includes design files such as Orcad and Gerber
- Board support library accelerates software development on the EVM

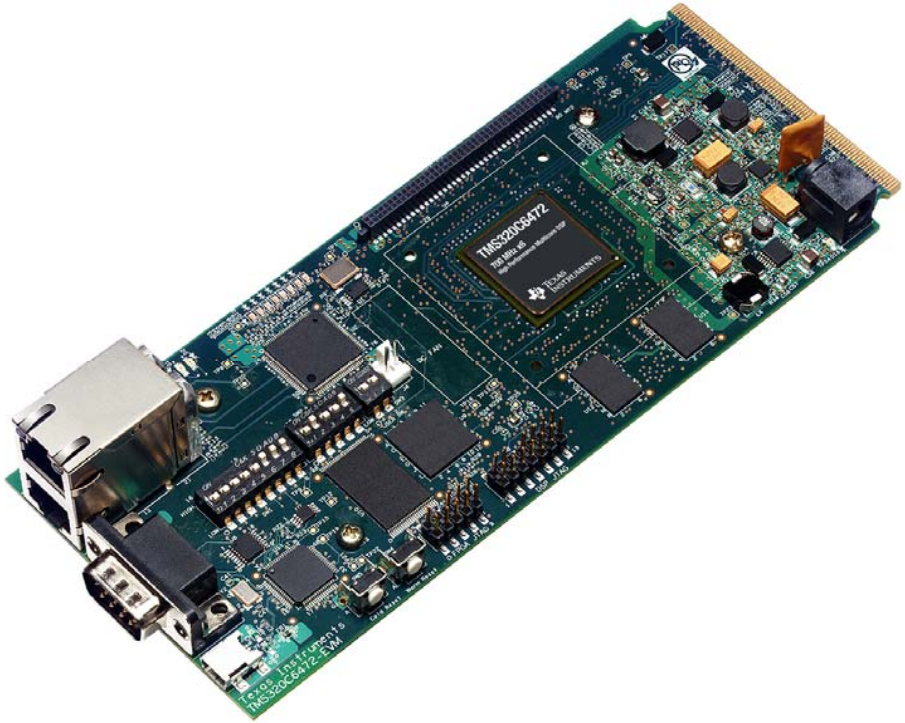

Support:

- Broad market support: Product Information Center - FAE - Community forums - Documentation - Training

TMDXEVM6472: $349 USD

SW – CCSv4, BSP, CSL, POST, NDK, Demo

C6472 EVM OOB Demo for RTM (BIOS version)

- Description:

  The demo, after booting, sets up the EVM as an HTTP server and allows multiple clients to connect to it via a web browser to view the on-board JPEG-encoded video clip. Both the demo and clip are stored in the on-board 128MB NAND.

- Key Features:
  - DSP/ BIOS v6
  - ***HTTP-streaming*** via HTTP server
  - Shows core usage via serial debug
  - Shows core loading via browser (stretch goal)
- SW Component Dependencies:
  - DSP/ BIOS 6 and CCSv4
  - NDK v2.0 and C6472 NSP
  - (No TI codecs required)

OOB Demo (cont.)

Network Connection Setup:
Ethernet Switch (EVM in DHCP server mode)
Or wireless DHCP router (DHCP client mode)
Or Static IP (direct connect from EVM to PC)

Ethernet cable

Ethernet cable

RS-232 cable

JTAG USB cable

Wireless Ethernet (if AP used)

C6472 EVM

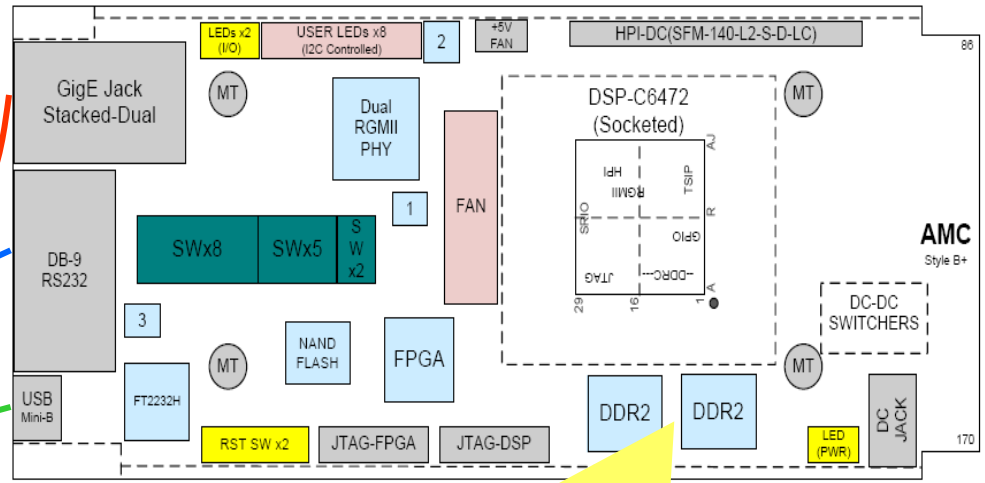

Real-time Monitoring:
•Basic core utilization via serial console
• Graphical core utilization via Web browser Java app

Core 0:
•DSP/ BIOSv6 HTTP streaming server demo application
• HTTP server
• DHCP server
Core n: socket instances
Other DDR usage:
• JPEG encoded images
• Buffers for socket instances
• Run-time stack and heaps

Multiple decoded streams (instances), one per Web browser window loading up C6472 DSP

See you at the Demo Desk