# AC / DC Power Supplies

# Agenda

- **Efficiency & Power Density**
- Solutions for AC/DC Power Supplies
  - Green Mode Bias supply
  - PFC
  - LLC Half Bridge
  - Bus Converter
- Efficiency Gain by MOSFET- Selection
- Summary

# Power Density & Efficiency

## Main efficiency goal

**Efficiency Increase**

Loss Reduction

## Driving forces

Longer Runtime (Battery Powered)

Specific Load Profiles

Heat Reduction

Under Full Load

Legislation (Energy Star, EuP, …)

All Load Conditions

Prerequisite for **Increased Power Density**



Texas Instruments

# Efficiency Increase – The Global View

65% of all energy created is lost in the conversion & distribution process… this is why energy conservation is so important

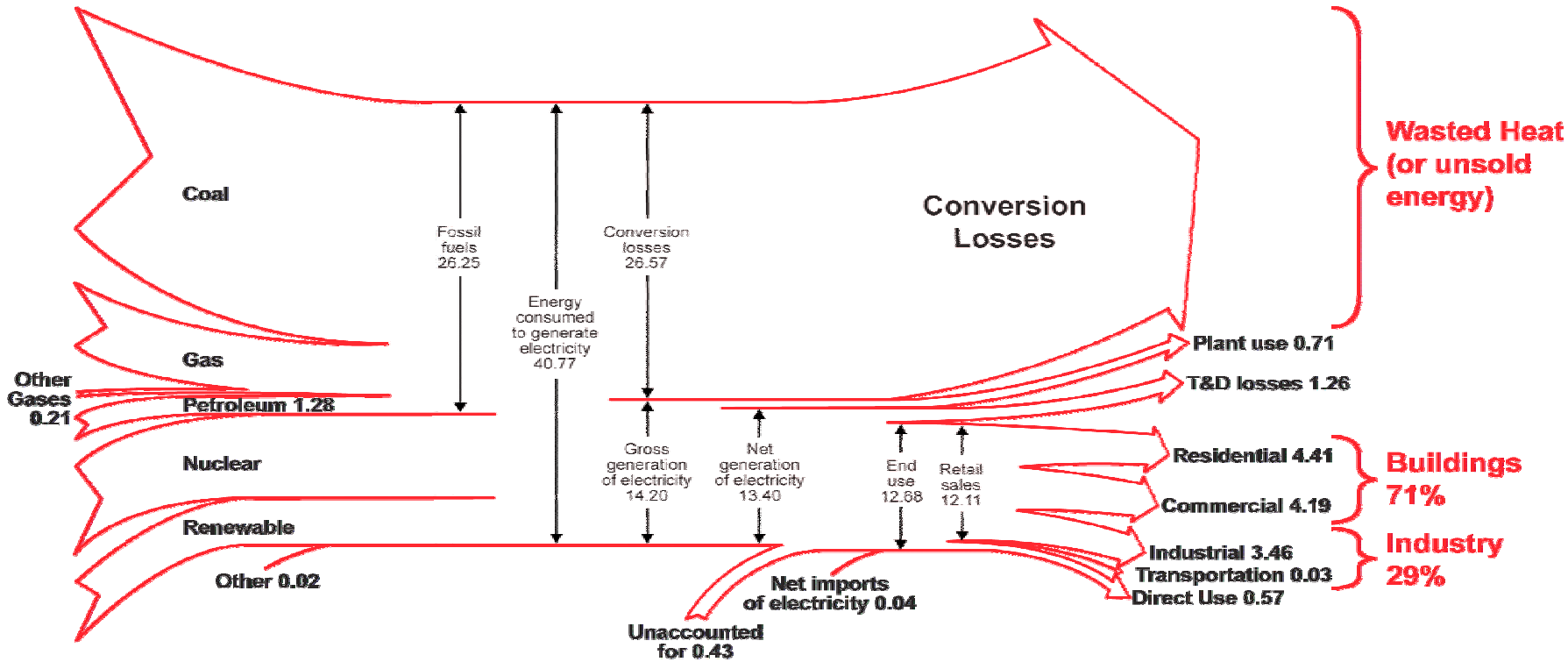


EIA: Energy Information Administration. Official Energy Statistics from the US Government.

**1kWh saved is 3.3kWh of energy source never consumed**

# Efficiency Increase – The Global View

## NegaWatts: The argument for efficiency

- “NegaWatt” : firstly a typo (instead of MegaWatt)
- Finally adopted as a term describing electricity that wasn’t created due to energy efficiency

Source: Wikipedia

**1kWh saved is 3.3kWh of energy source never consumed**

# Efficiency Increase - Legislation

- **WW Directives & Legislation**
  - Energy Star (US + others), 80 PLUS (US), Nordic Swan, California Energy Comission (CEC / US), China Energy Conservation Project,Top Runner program (JP), Minimum Energy Performance Standards (MEPS / AU, NZ), Blue Angel (DE)
- **EU EuP (Energy using Products) Directive**
  - Different focus areas / LOTs, ranging from:
    - EPS (external power supplies) over STBs, lighting to TV
- **General targets:**
  - **NO LOAD power consumption:**
    - EuP: for up to 250W EPS: <0.5W (2010) / <0.3W (2011)
    - Energy Star: For TV <1W (Draft)
  - **Average Efficiency in Active Mode (avg. of 25 / 50 / 75 / 100% $P_{OUT}$)**
    - EuP: for 51W to 250W EPS: >85% (2010) / >87% (2011), >86% (2011, @ <6VDC OUT, >0.55A)

- Power Density & Efficiency
- **Solutions for AC/DC Power Supplies**
  - **Green Mode Bias supply**
  - PFC
  - LLC Half Bridge
  - Bus Converter
- Efficiency Gain by MOSFET- Selection
- Summary

# Ways to Achieve Required Efficiency

- **No-Load Power: <0.3W for EPS**
  - **Technology advice:** Use a PWM controller optimized for low power consumption at standby mode
  - **TI Product: UCC28600** QR-Green Mode Flyback Controller
- **Average Efficiency: 86% / 87% for EPS (25%, 50%, 75%, 100% of Name Plate Output Power )**
  - **Technology advice:**
    - Use control and topology optimized for high efficiency, e.g.Quasi Resonant topology.
  - **TI Product: UCC28600** QR-Green Mode Flyback Controller
  - Choose carefully the **MOSFETs, diodes, transformers** which are key to get higher efficient design

**TI Support: Design examples compliant with regulation**


Texas Instruments

# UCC28600 Quasi Resonant Flyback

- Controllers such as UCC28600 can operate in multiple modes:
  - Quasi Resonant Mode
    - high efficiency at full load
  - Discontinuous Current Mode
    - Limit upper frequency for smaller EMI filter
  - Frequency Foldback Mode
    - Enhance light load efficiency by fS reduction
  - Green Mode
    - Use bursts to reduce snubber loss and split harmonics for audio reduction


Texas Instruments

# UCC28600 – Valley Switching Makes the Difference

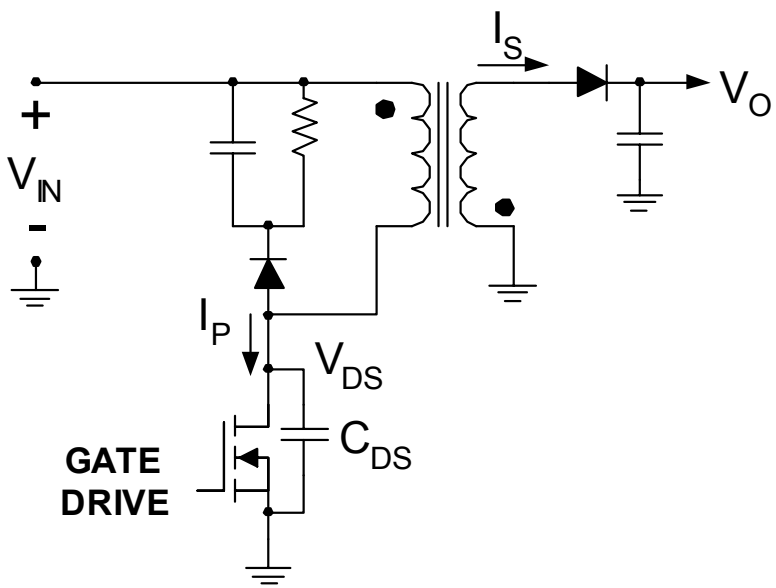


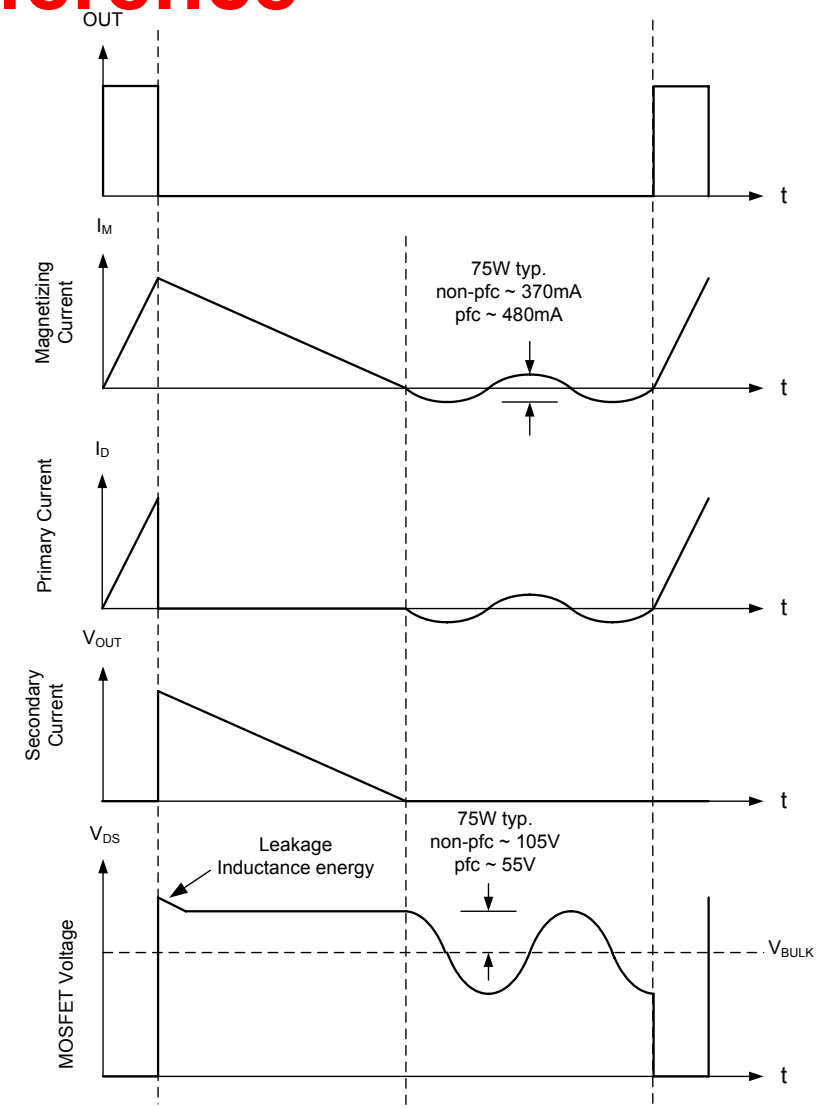




Texas Instruments

# QR and FFB Valley Switching

**36W, QR mode**

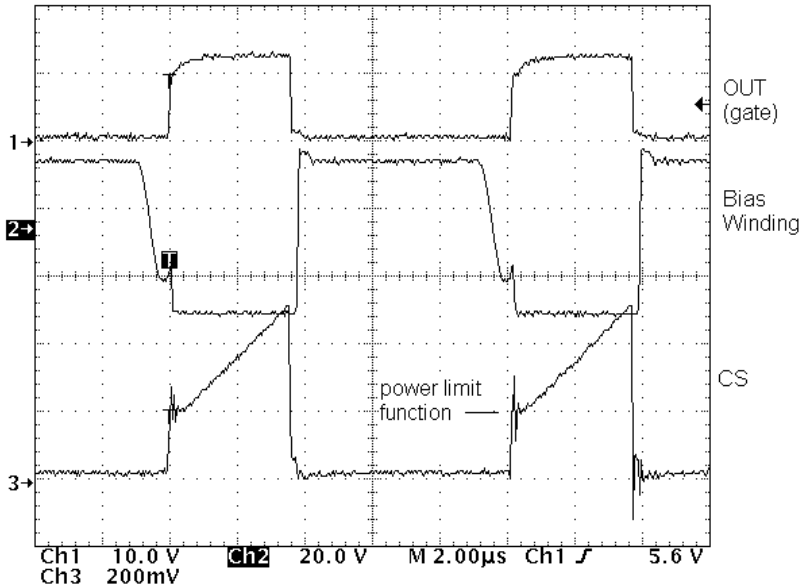


**13.8W, FFB mode**

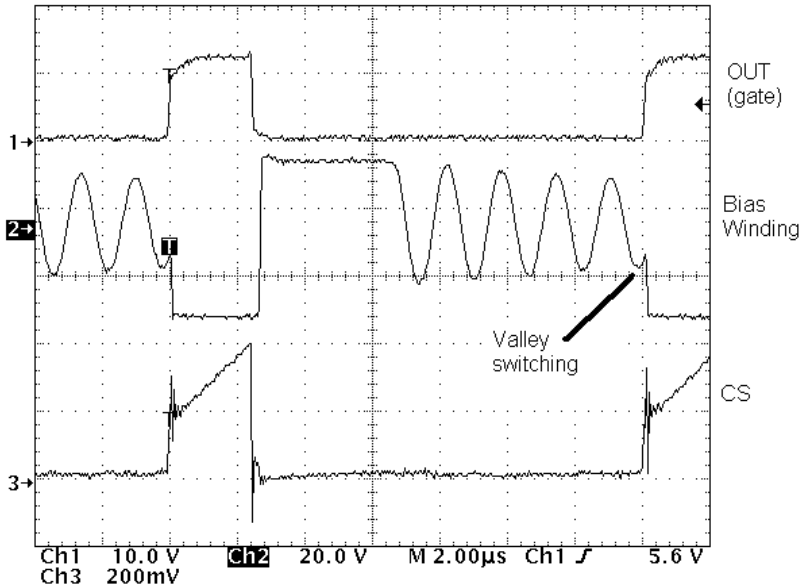

# UCC28600 – Multiple Operation Modes Make the Difference

**Green Mode (Burst Mode)**
use bursts to reduce snubber loss and split harmonics for audio reduction

**Quasi-Resonant Mode**
high efficiency at full load

**Discontinuous Conduction Mode**
limit upper frequency for smaller EMI filter

**Frequency Foldback Mode**
enhance light load efficiency by reduction of switching frequency

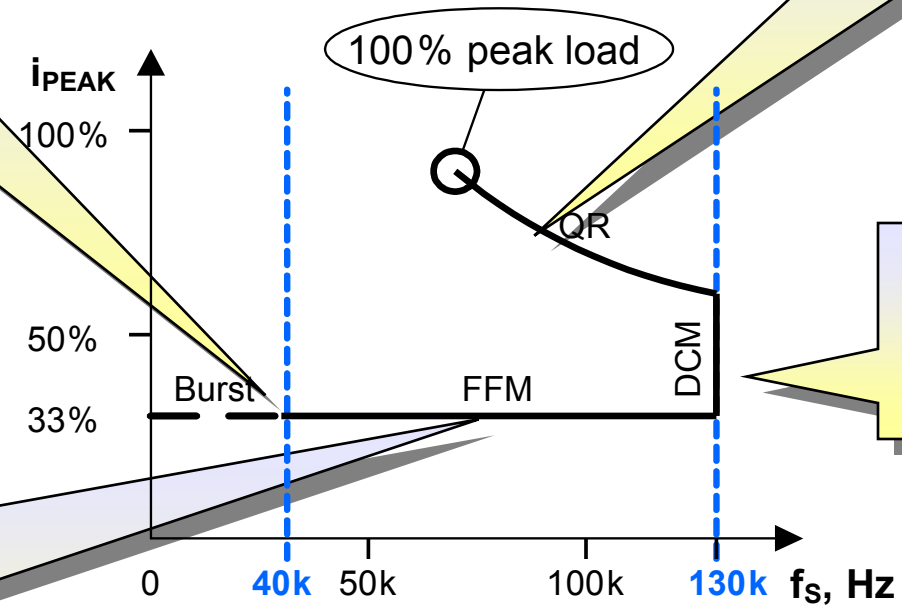


**% $i_{PEAK}$ vs $f_S$ for loads ≤ 100% peak load**



Texas Instruments

# UCC28600 Operating Modes

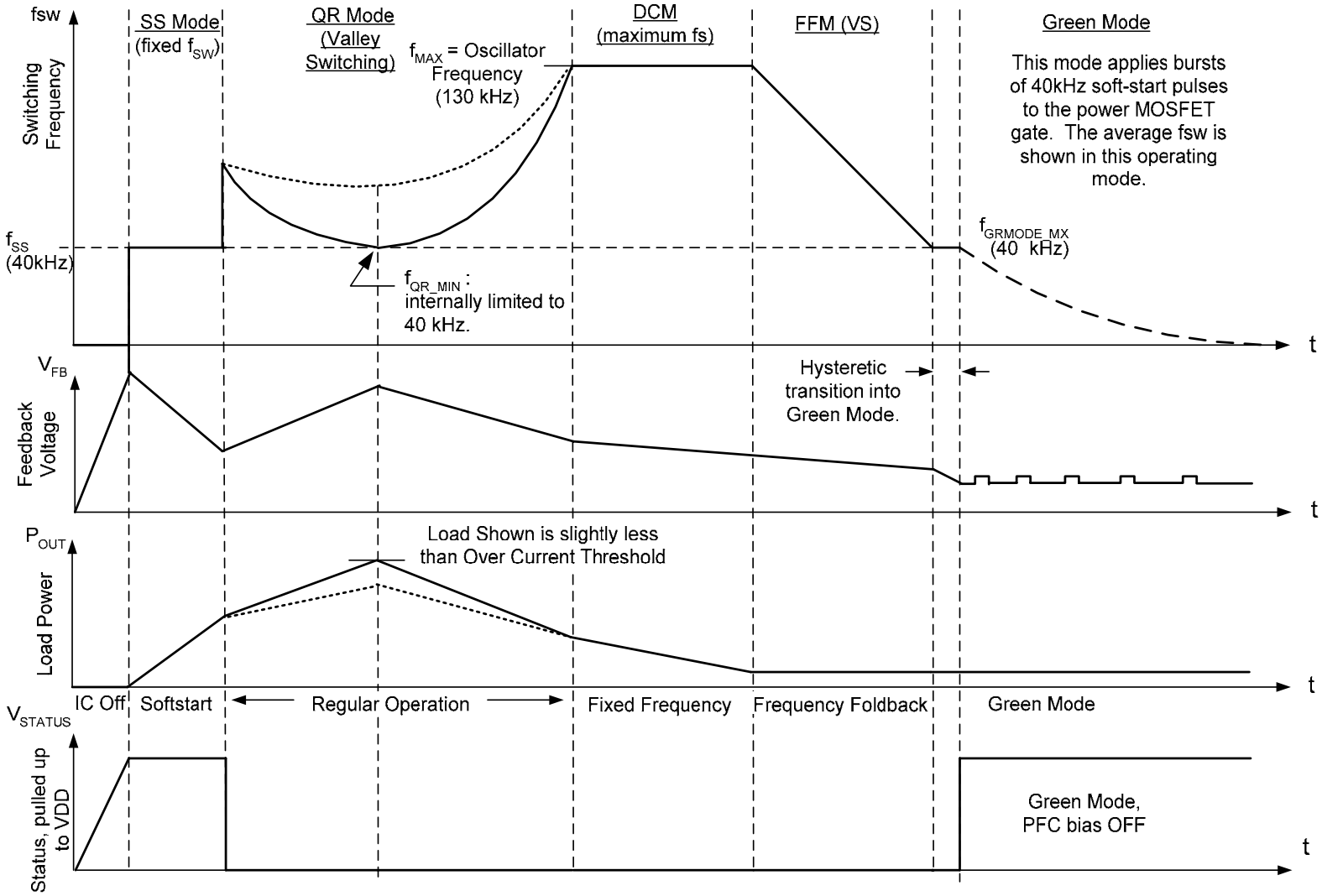




Texas Instruments

# UCC28600 - 8-pin Quasi-Resonant Green Mode PWM Controller

**Multi - function pins give full features in 8-pins instead of 14 !**

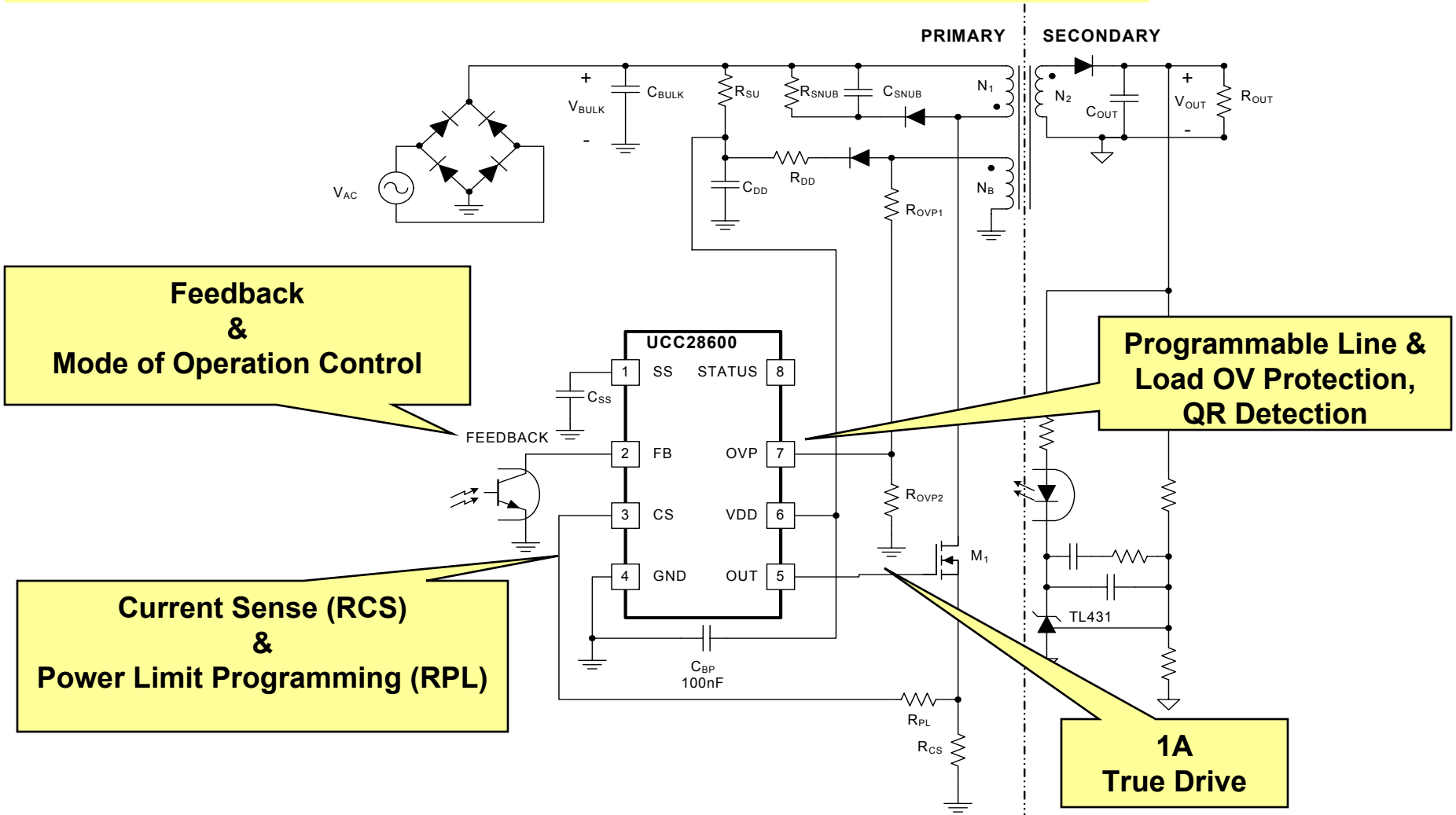




Texas Instruments

# Example: 80W SMPS

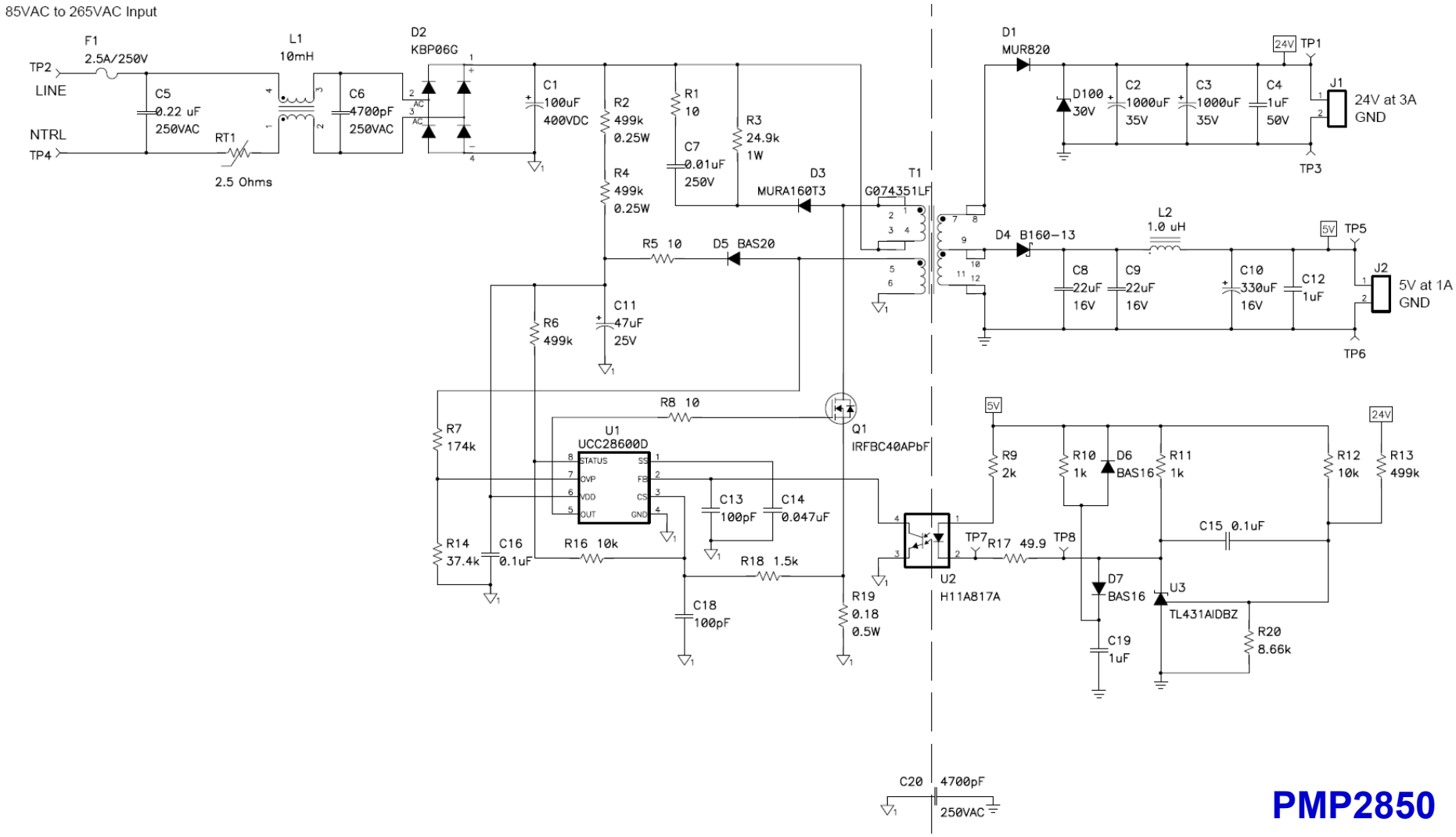


**PMP2850**



Texas Instruments

# 80W SMPS: Efficiency

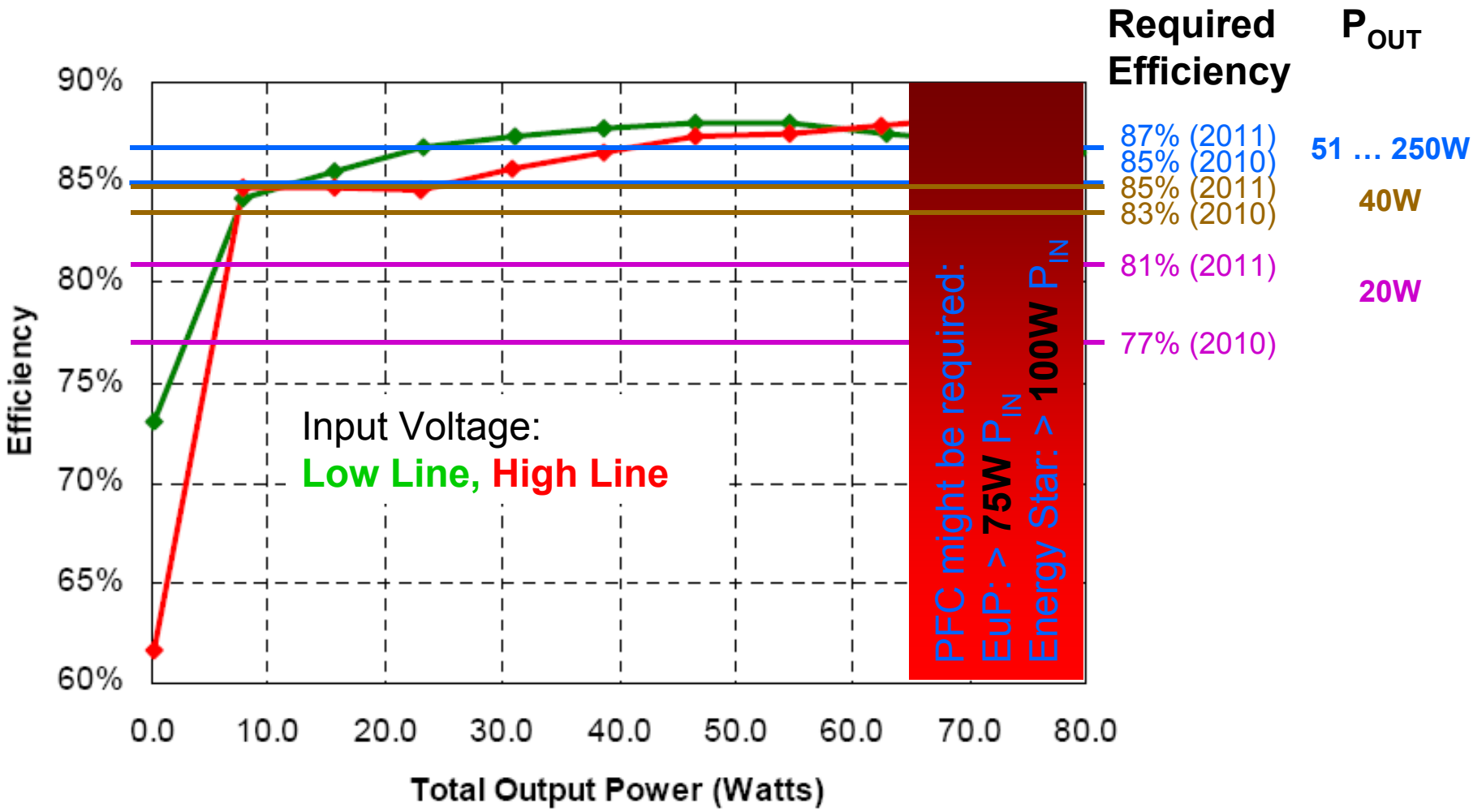


**Design meets even future efficiency goals over wide ranges of output power !**



Texas Instruments

# 80W SMPS: No-Load Power

**Low Line (DC)**

| Vin | Iin (mA) | Pout | Losses | Efficiency |
|---|---|---|---|---|
| 155.2 | 2.81 | 0.32 | 0.12 | 73.1% |
| 155.1 | 60 | 7.84 | 1.46 | 84.3% |

**High Line (DC)**

| Vin | Iin (mA) | Pout | Losses | Efficiency |
|---|---|---|---|---|
| 310.3 | 1.68 | 0.32 | 0.20 | 61.6% |
| 310.3 | 30 | 7.89 | 1.42 | 84.7% |

**Design meets even future no-load power limit of <300mW !**

# UCC28600 - 65W Universal Input Compliant with Standard!

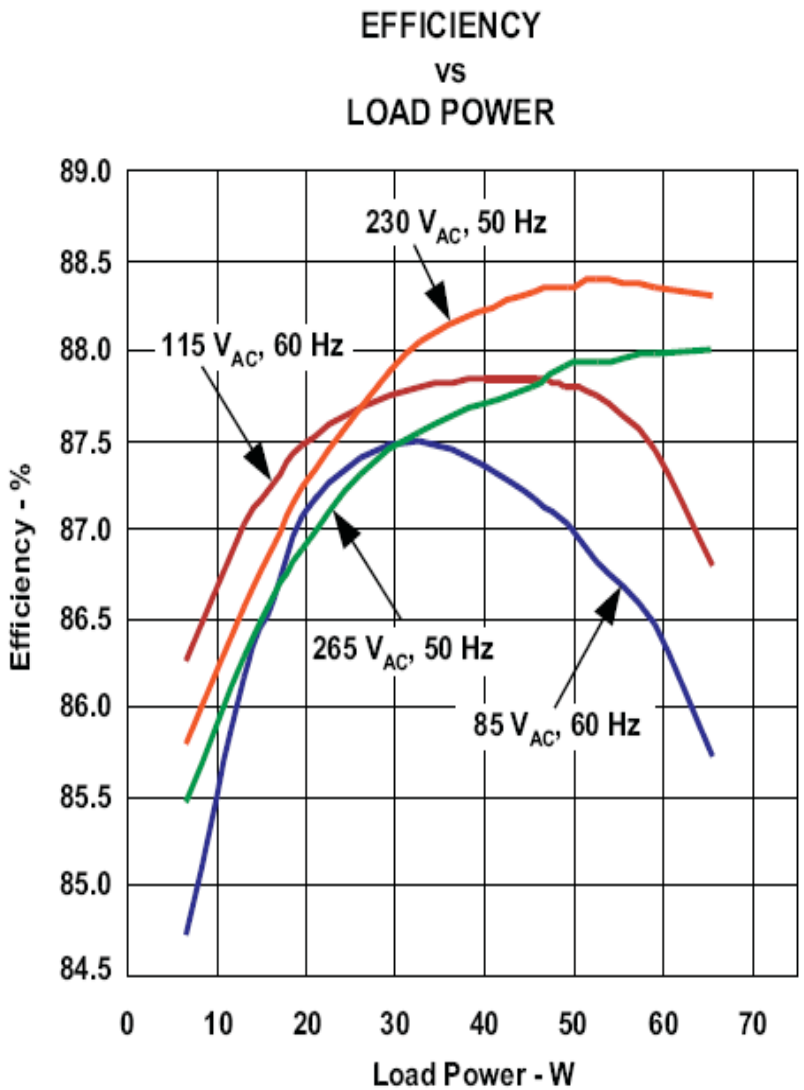

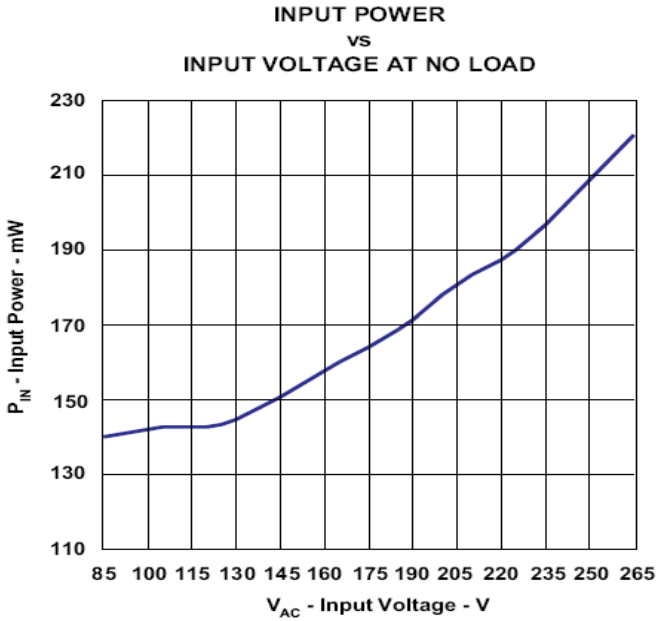

- Power Density & Efficiency
- **Solutions for AC/DC Power Supplies**
  - Green Mode Bias supply
  - **PFC**
  - LLC Half Bridge
  - Bus Converter
- Efficiency Gain by MOSFET- Selection
- Summary

# Power Factor Correction Standards

- **EN61000 – 3 - 2**
  - Focuses on line-current harmonics
  - Four categories according to different end equipments
  - Most power supplies are **Class D (75 … 600W)**
- **Energy Star®**
  - Power supplies with **greater than or equal to 100-W input power** must have a true power factor of 0.9 or greater at 100% of rated load when tested at 115 V, 60 Hz
- **Universal-input power supplies need to meet requirements of both standards for WW sales**
  - The PFC circuit must increase the PF to the Energy Star limit AND attenuate the harmonics below the limits of EN61000-3-2

# PFC - Power Factor Correction

## …..is actually Harmonics Attenuation

## Where are the Harmonics coming from?

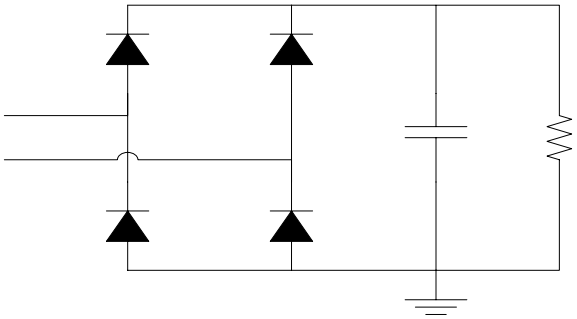

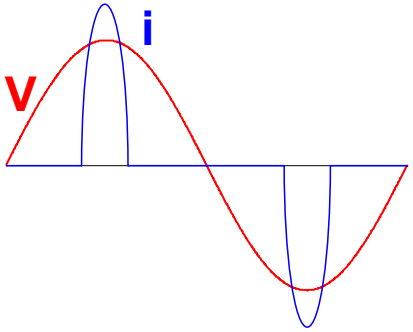


- ✓Simple Structure
- ➢No regulation
- ➢Large harmonics
- ➢Low power factor

# PFC – Basic Topology

- **Most common topology is the boost converter**

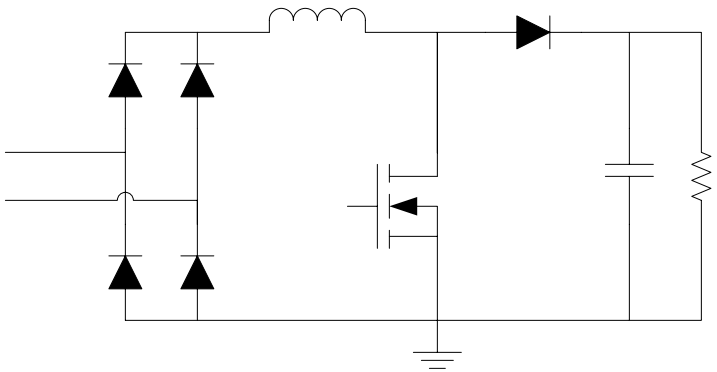

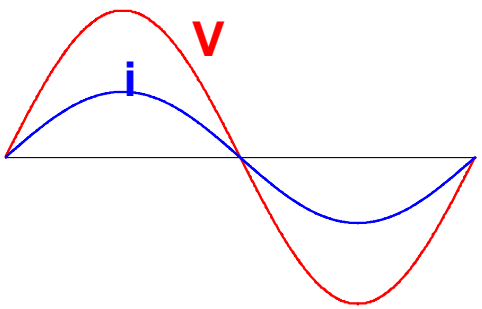


- ✓Regulated output
  - ✓Fixed $t_{HOLDUP}$
- ✓Low harmonics
- ✓High power factor
- ➢Relative complex
- ➢No Inrush-/Short-Current Protection

- **Why boost converter ?**
  - In CCM there is “continuous” input current
  - Boosted output voltage simplifies holdup


Texas Instruments

# PFC – Popular Operation Modes

## Transition Mode (TM)

open loop current shaping

- Fixed $T_{ON}$
- Zero Current Detection

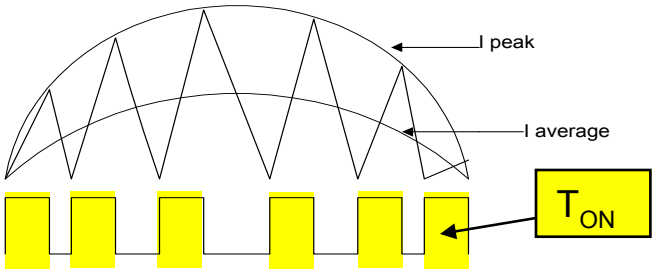


## Continuous Conduction (CCM), Average Current Mode (ACM)

closed loop current shaping

- Fixed T, fixed f
- Modulation of D

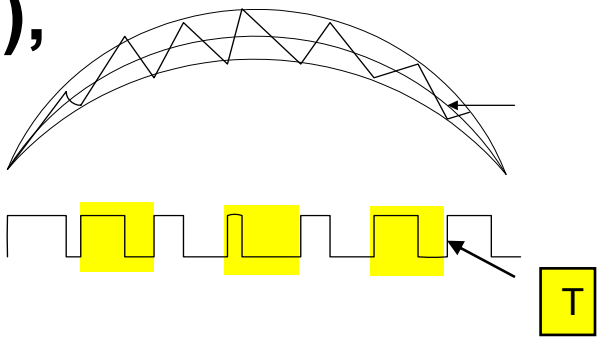




Texas Instruments

# CCM - vs. TM - PFC

## CCM

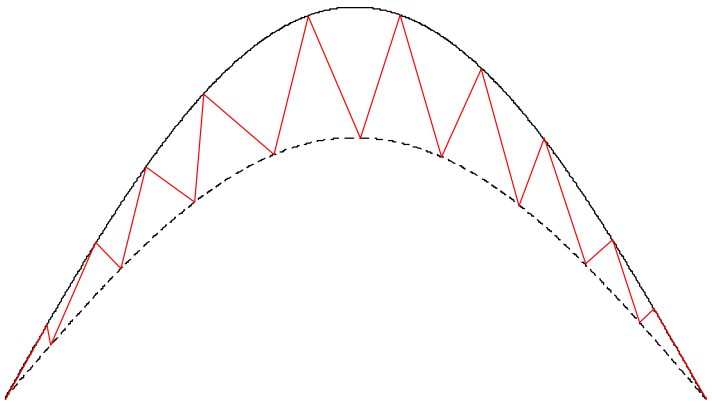

- **Smaller ripple current**
- **Smaller EMI filter**
- Constant switching frequency
- **Better for higher power**
- Switching loss may be higher due to diode reverse recovery current
- High components cost to maintain high efficiency

## TM

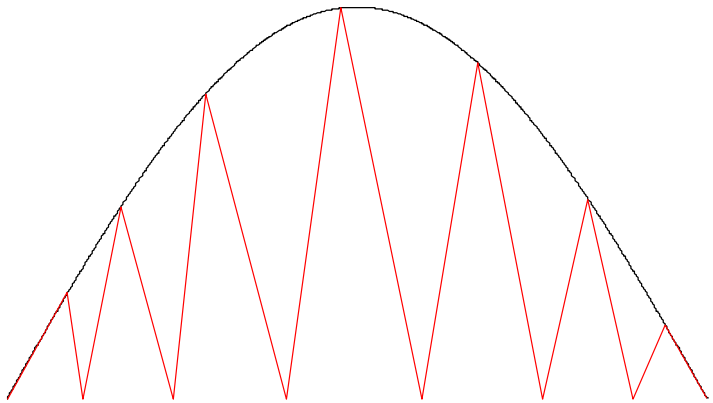

- **No reverse recovery loss - ZCS**
- Low cost solution
- Soft switching possible
- Variable switching frequency
- Large HF current ripple, larger conduction loss (AC resistance!)
- Larger EMI filter
- Better for lower power



Texas Instruments

# TM PFC - Variable Switching Frequency Range

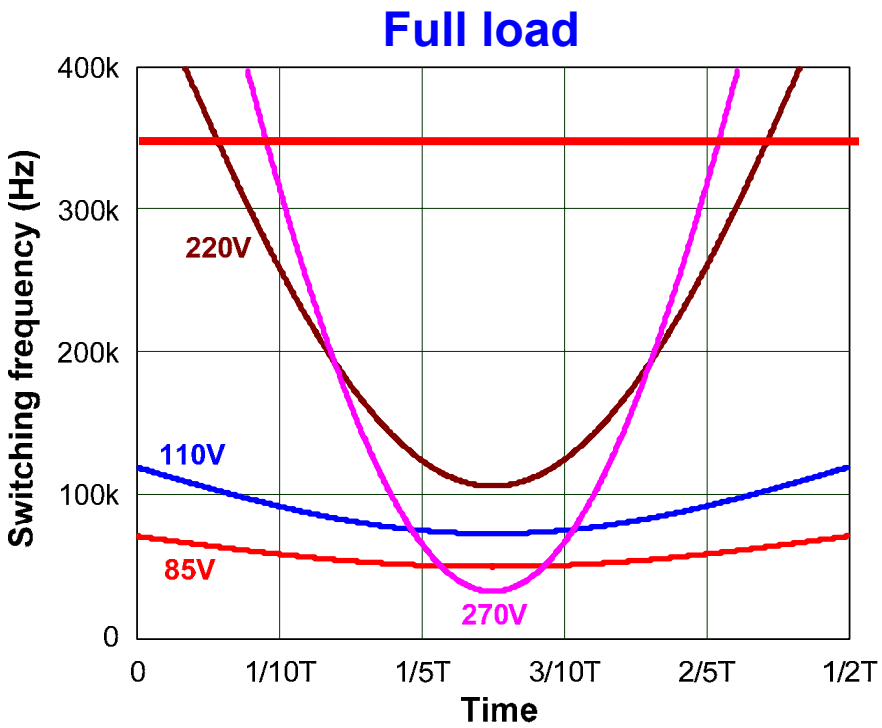


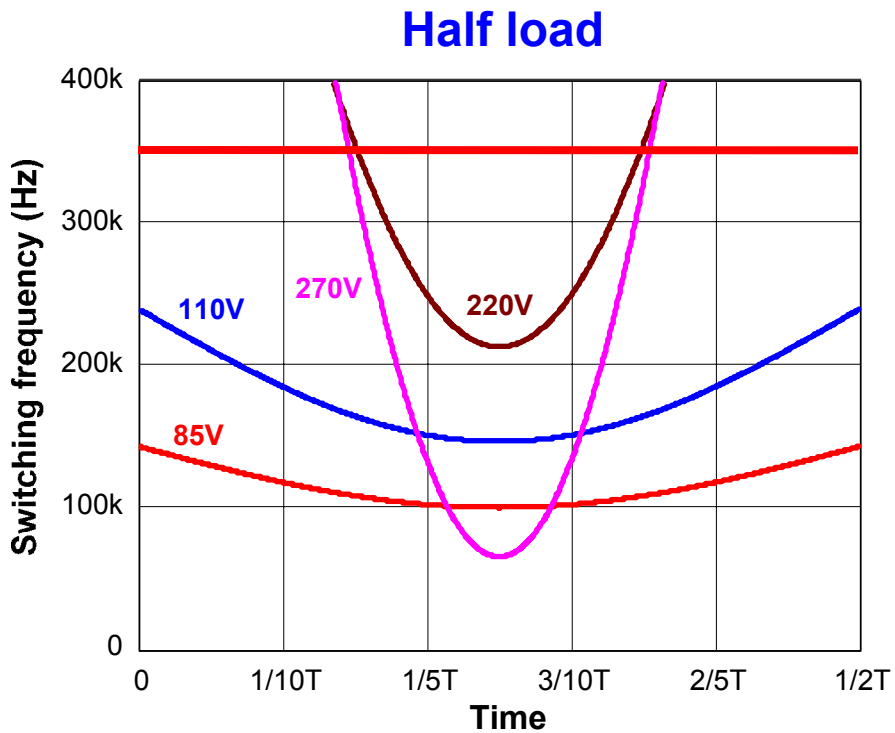


- TM PFC has variable switching frequency
- At low input line, switching frequency is relatively constant
- Minimum switching frequency happens at peak of input voltage
- At high input line, at zero crossing, switching frequency limiting may be required

# MOSFET Current Stress at Different Power Levels (Single Phase)

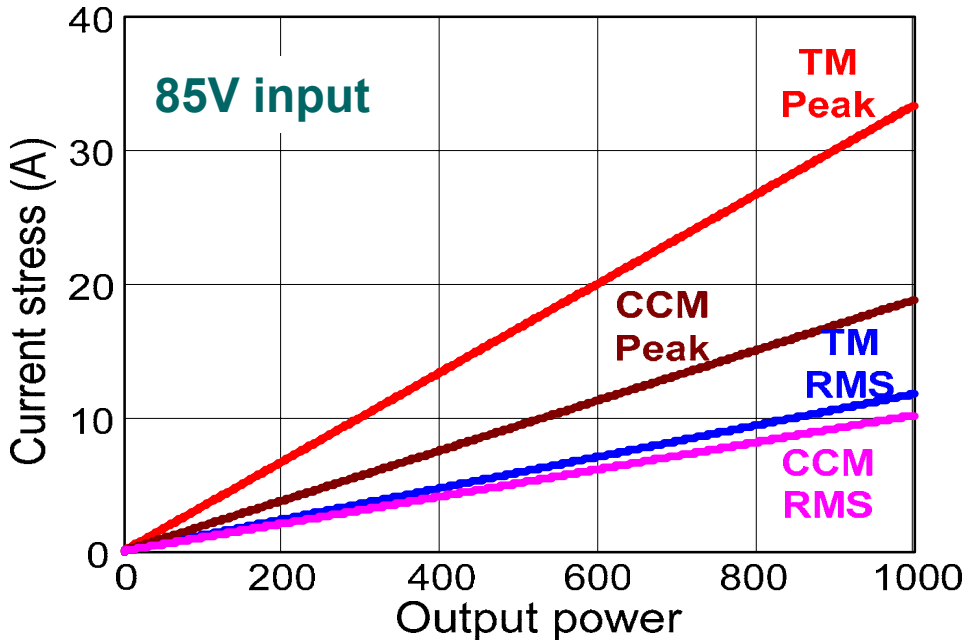


- For same current stress, CCM PFC can process higher power
- CCM has less conduction loss, higher switching loss
- The difference in the RMS current stress is not very large

# Inflection Point TM vs. CCM (single phase)

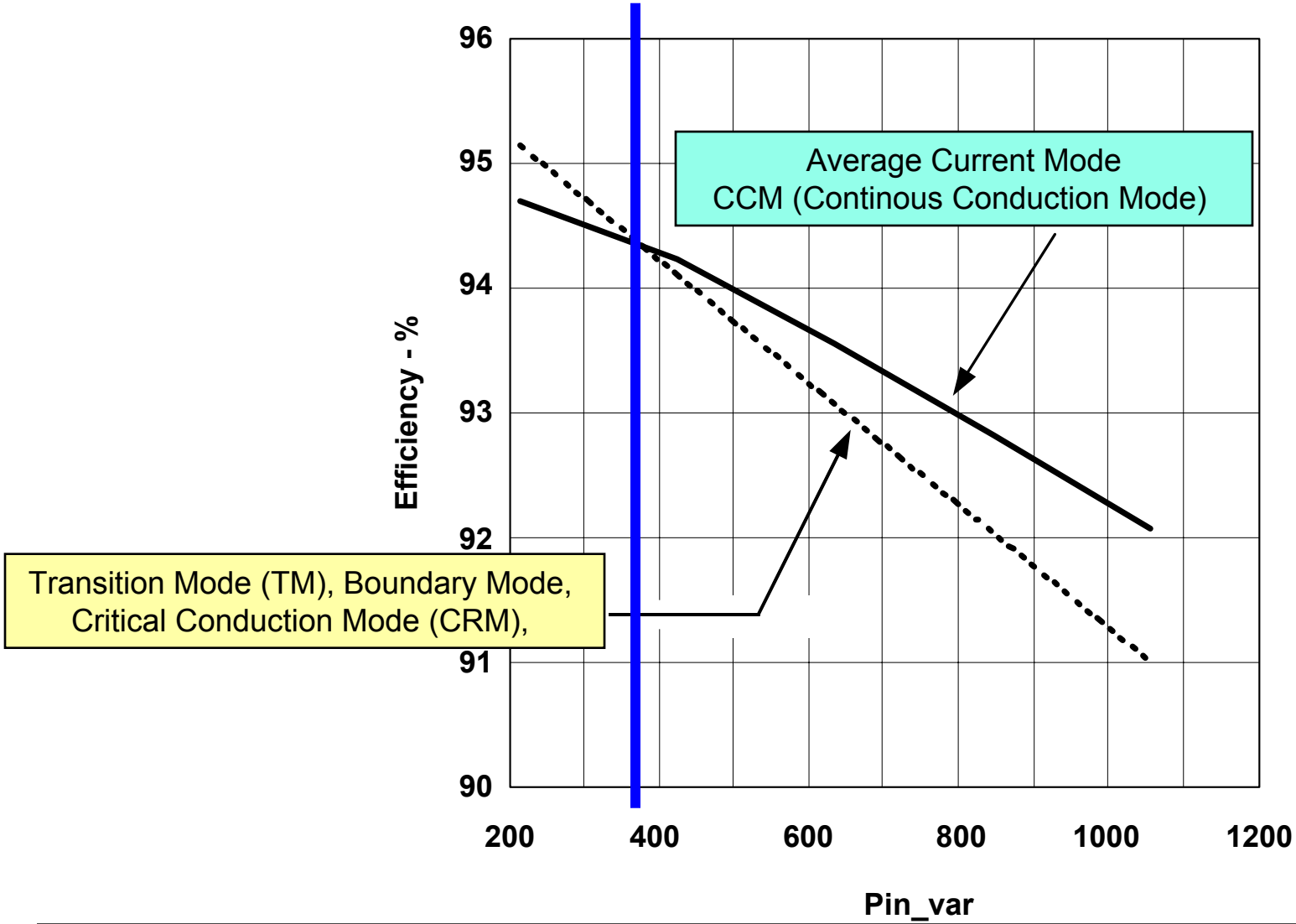




Texas Instruments

# TI's Single Phase PFCs

## TM

**UCC38050 / 51** Lowest Cost 8 Pin
Standard Pin-Out
Perform. Enhancem.
Slew-Rate Comparat.
Increased Gate-Drive
Improved Protect.

## CCM

**UCC28019 (A)** Low Cost;
Improv. 8 Pin,
Multiplierless

**UC3853 / 54 (A/B)** Low Cost
8 Pin 16 Pin Industry Standard

**UCC3817(A) / 18(A)** High Performance;
Next Generat. 3854

**UCC3819(A)** Tracking Boost version
of UCC3817 / 18 for
Reduced Boost-C Stress

**UCC3850x** PFC / PWM Combo

**UCC2851x / 2x** Next Generation
3850x PFC / PWM
Combo Controller


Texas Instruments

# Green Mode PFC / PWM Solution

Green Mode Status pin disables PFC during light load for energy savings

**Application with PFC 75W to 200W**

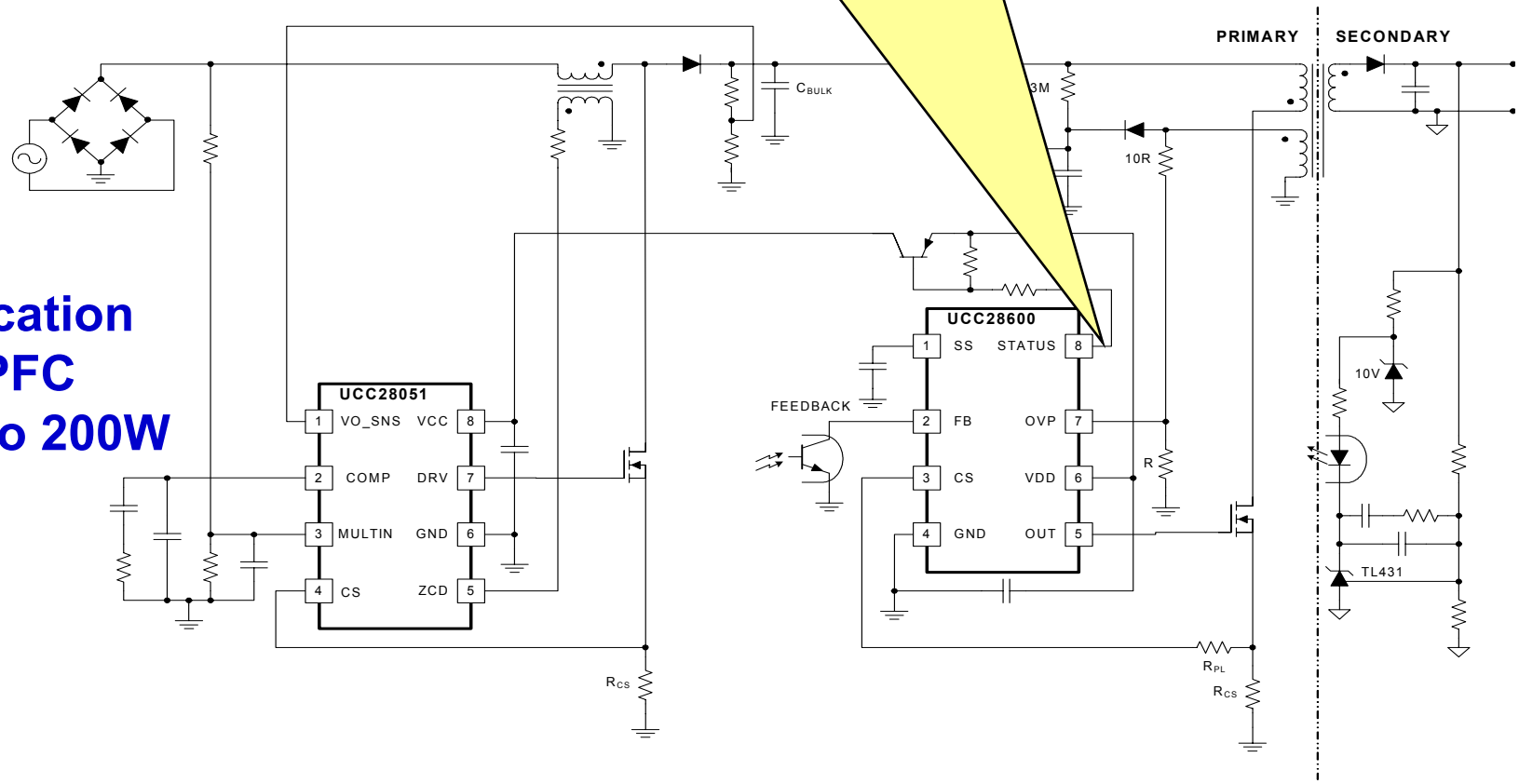




Texas Instruments

# Higher Power - Cost Reduction by Modular Approach

**Existing design**

**Higher power design choices:**

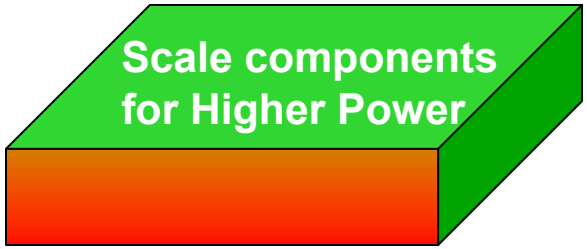


- New technology
- New control method
- New components

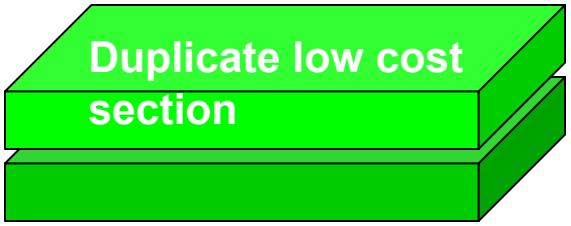


- Same technology
- Same components
- Same control method

- Using modular approach, high power converter can be implemented by using low power converter design
- Distributed loss, better thermal management
- Design cycle can be greatly reduced
- Components stock can be improved, large volume discount is possible

# Increasing Power - Parallel Devices or Parallel Converters?

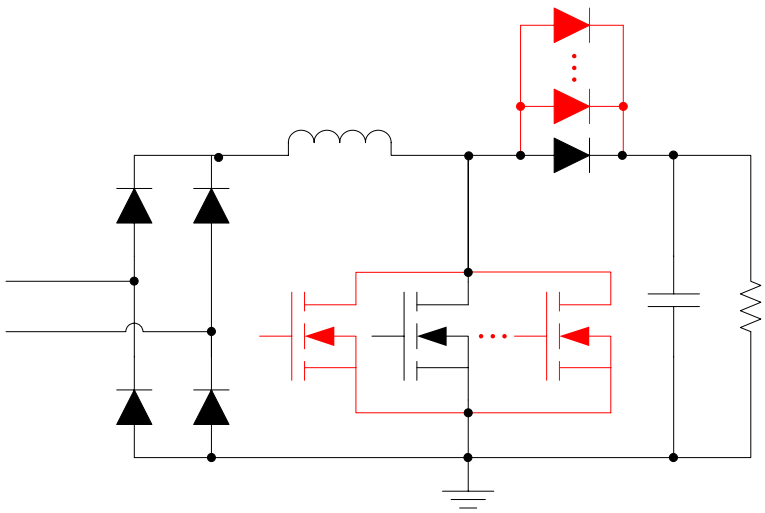

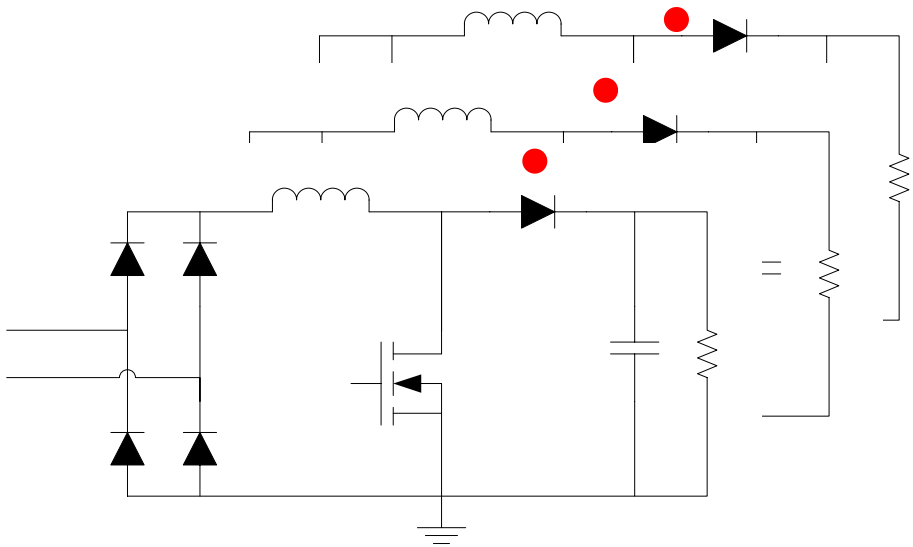

## *Parallel devices*

- May appear straight forward, but creates serious difficulties:
- Layout
- Form Factor
- Thermal management

## *Parallel converters*

- Modular approach, easy design, easy layout and easy thermal management
- Opportunity to interleave
- More complex control



Texas Instruments

# Interleaved PFC

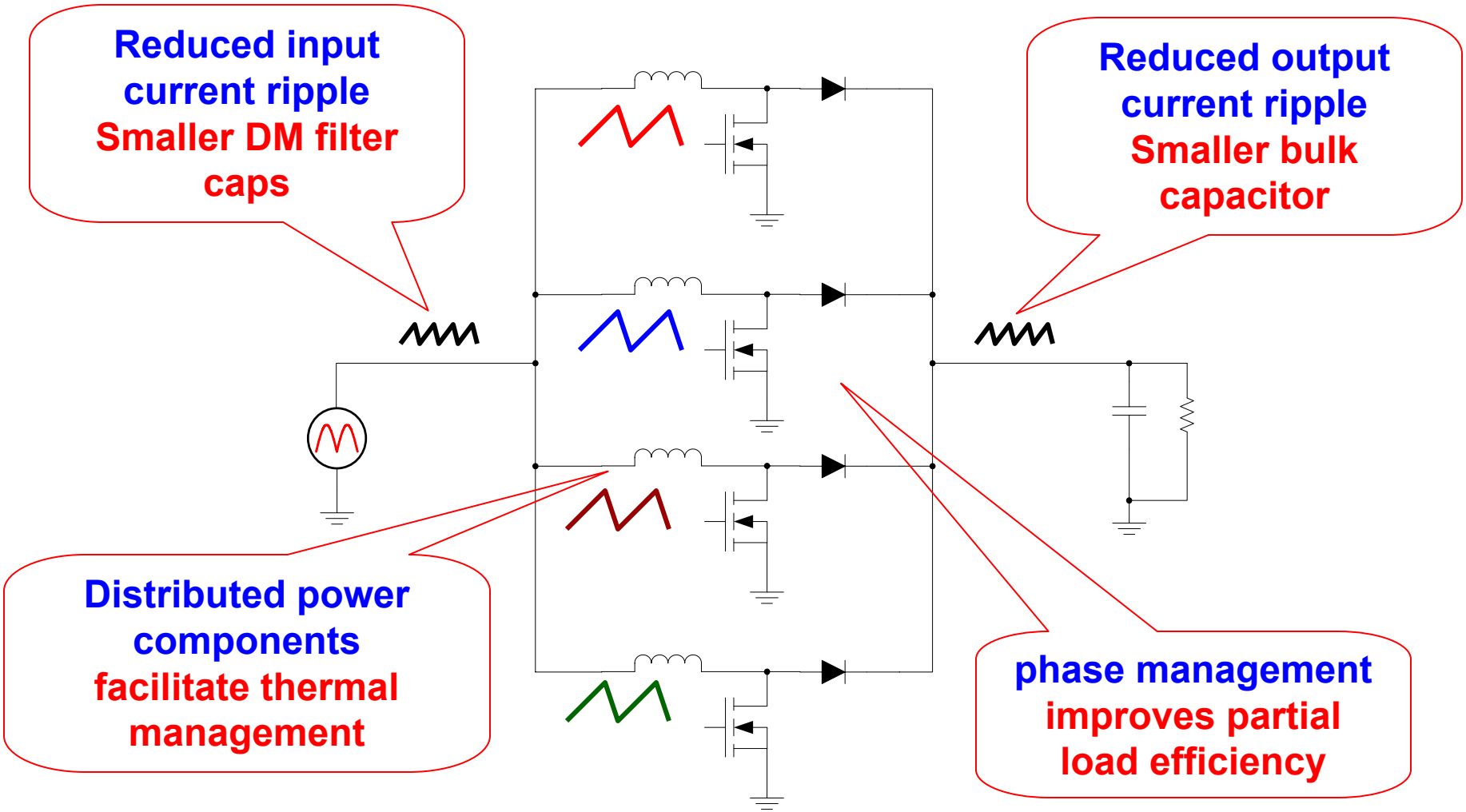

# Interleaved PFC - Significant Input Ripple Current Reduction

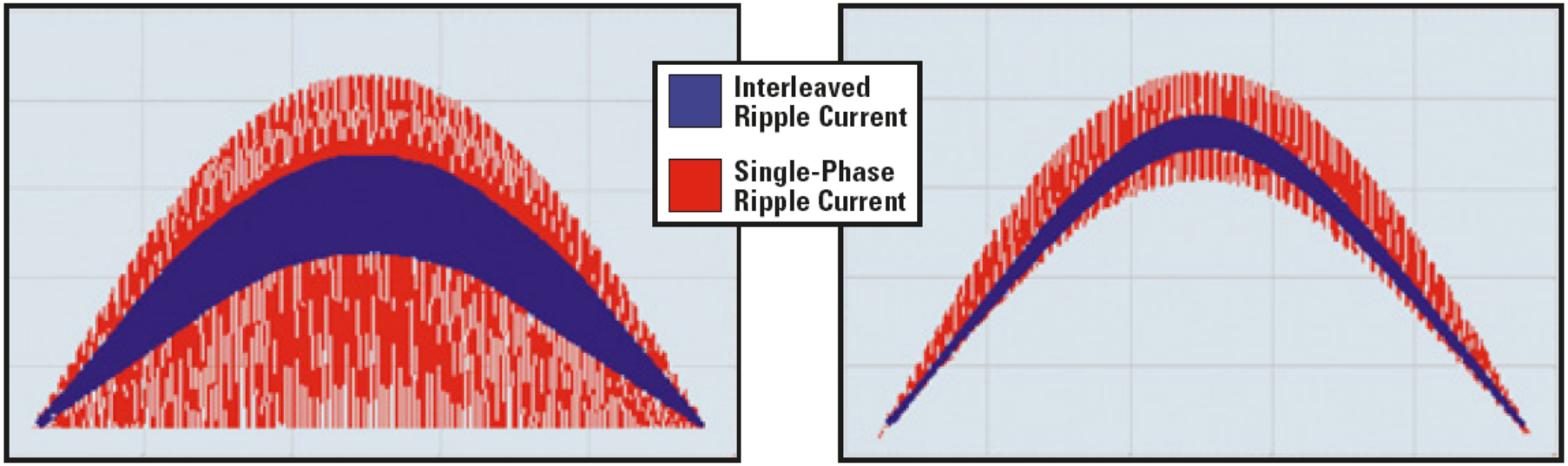


*UCC28060 Transition Mode PFC with Natural Interleaving™ technique.*

*UCC28070 Continuous Conduction Mode PFC*

- **EMI-Filter needs to take care of Ripple Current**
  - **EMI-Filtering can be drastically reduced due to drastically reduced ripple current**
  - **Ripple of Interleaved TM is similar to Single Phase CCM**

# The Fundamental Interleaving Problems

- **Sensing of the individual phase current**
  - Absolutely necessary for current sharing in CCM
  - TM may not need it

- **Synchronization at the appropriate phase angle (180º for two phases):**
  - Easy for forced frequency frequency (CCM)
  - Difficult for self oscillating variable frequency (TM)


Texas Instruments

# PFC
# TI solves the Interleaving Problems

**UCC28060** Industrie's First Natural Interleaving™ Transition Mode PFC

**UCC28061** UCC28060

- w/ improved audible noise performance
- w/ auto soft re-start after OV-Faults
- w/o Burstmode @ light load

# Interleaving Extends Power Range for TM PFC Solutions

- Ripple of Interleaved TM is similar to Single Phase CCM
- What does this mean in practice ????
  - **Allows the use of TM with it's inherent benefits at power levels (up to 800W) reserved for CCM PFC in the past**
- **TM Benefits:**
  - **natural "spread spectrum"**
  - **Zero Current Switching**
  - **use of cheap silicon diodes vs. expensive SiC Diodes required w/ CCM**

# UCC 28060 / 61 uses Natural Interleaving

## Master- Slave Method

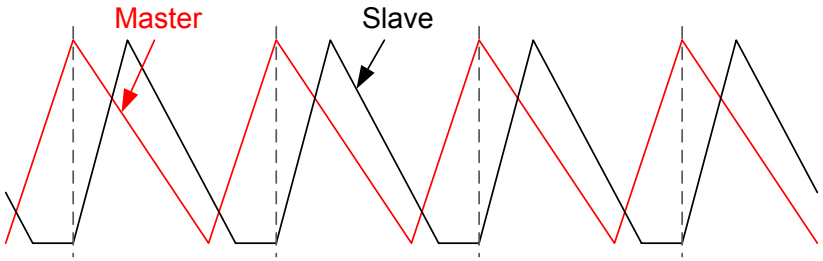


- Lower Inductance in the slave phase to prevent entering CCM
- Phase shift not optimal
- Current sharing not optimal

## Natural Interleaving

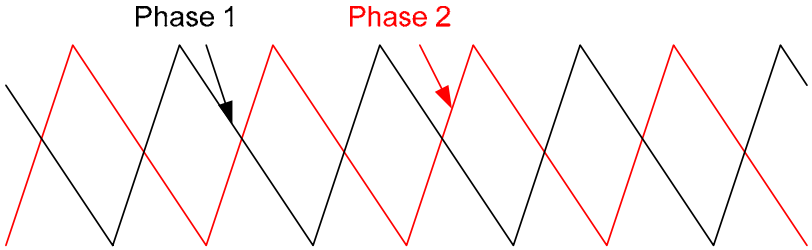


- Both channels operate in TM
- Phase shift of the phases is 180°
- No Master / no Slave

**Better current sharing and lower ripple current**

# UCC28060 / 28061 Typical Circuit

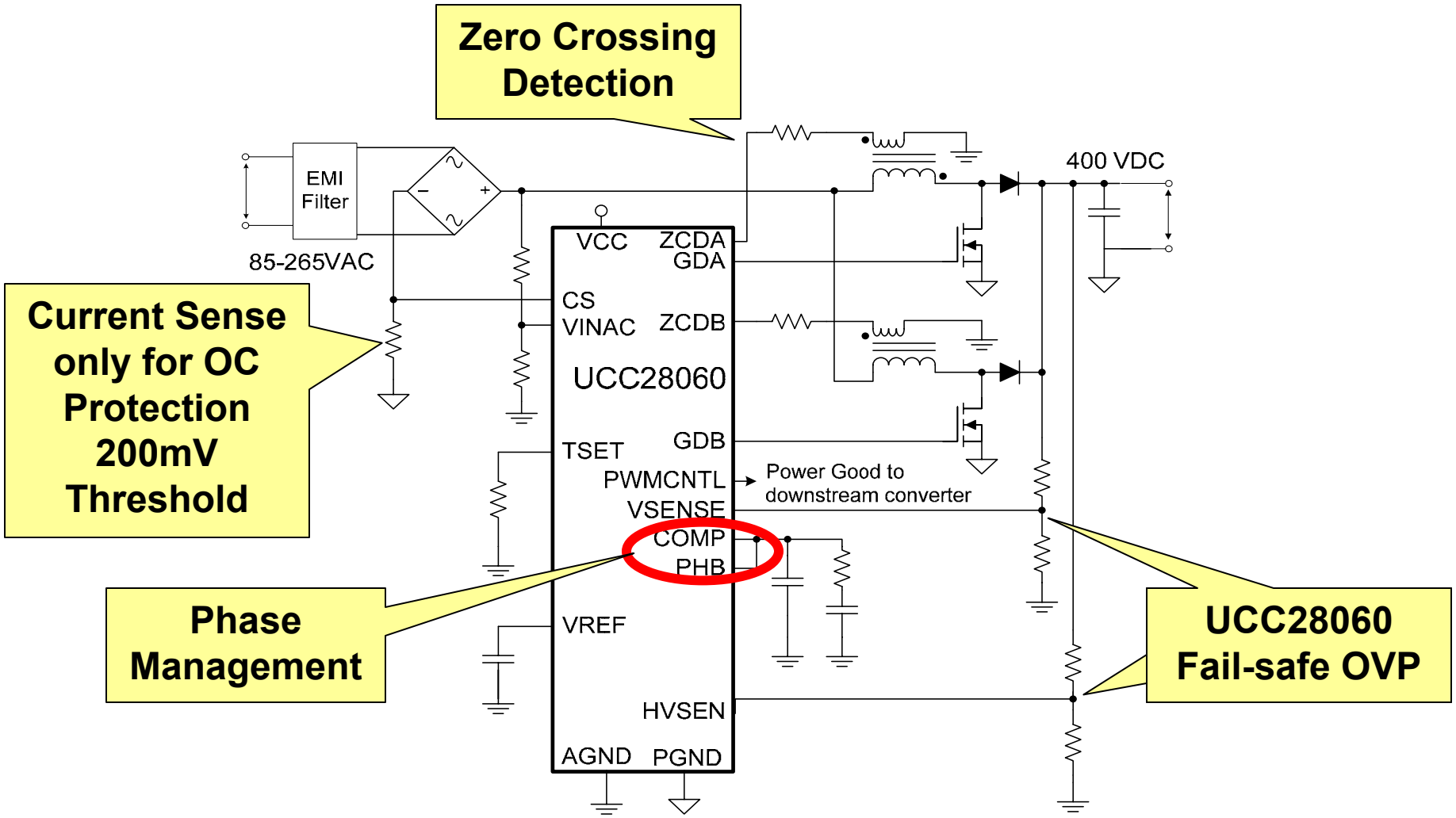


**Sensorless Current Shaping**



Texas Instruments

# UCC28060 Features

**All customary functions plus unique features:**

- **Sensorless inductor current shaping**:
  - **No source current sense resistors needed**
    - Simplifies layout
    - Reduces noise susceptibility
    - Greatly reduced power dissipation (approx. 1V drop each)
  - **Current sharing by balanced volt*second on times**
    - Determined mainly by the inductors tolerance
  - **Robust overcurrent protection**
    - Single low voltage drop (200mV) sense resistor in the input line
    - completely eliminate “mysterious” failures caused by:
      - » post brownout
      - » blackout inrush currents


Texas Instruments

# Current Ripple Cancellation in TM

Total

Phase A

Phase B

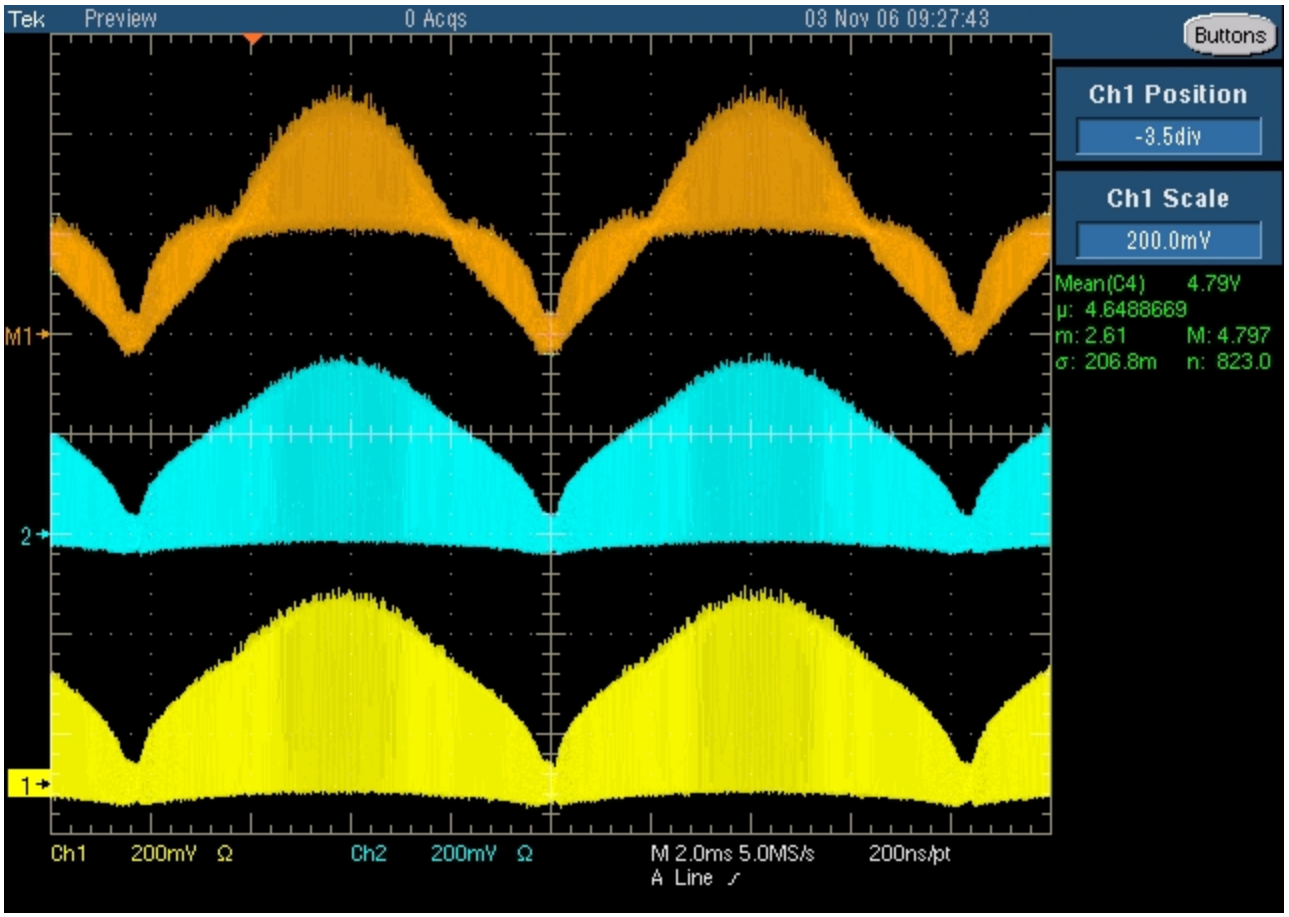


2A/div

2mS/div

- **180 phase shift and TM operation can be realized for whole line cycle**
- **Perfect Current Ripple Cancellation at D = 50%**

# Phase Management Improves Light Load Efficiency

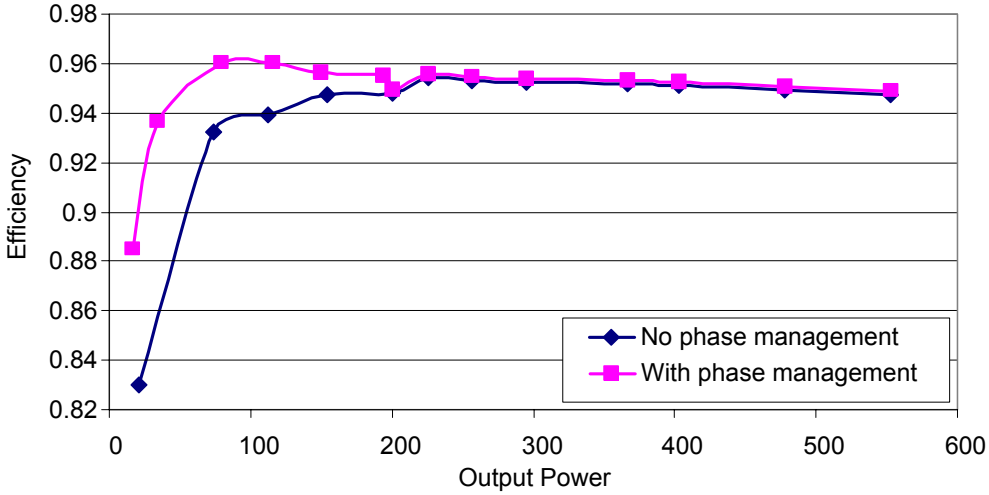


**115V input**

**230V input**

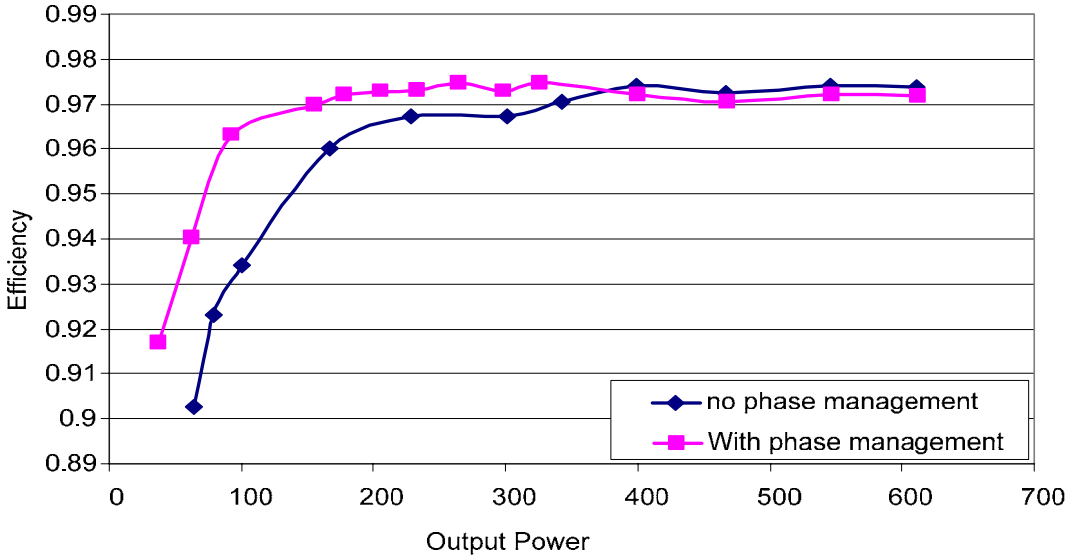


- **Single-phase operation at light load conditions improves system efficiency**
- **Phase management improves system efficiency at different line and load conditions**

# UCC28060 / 61 Design Support

- 300W EVM (SLUU280) 20mm height

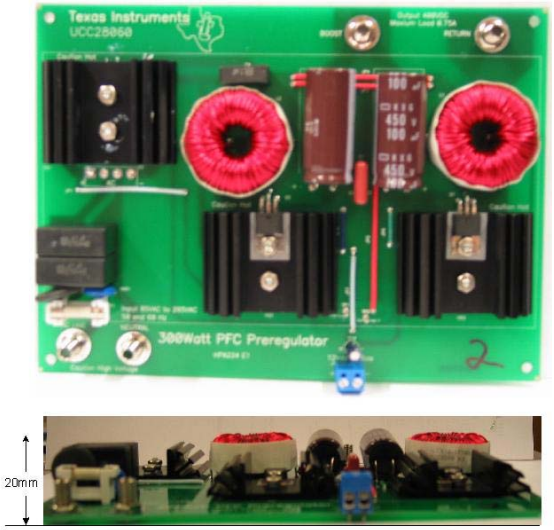


- 600W Design User Guide (SLUU299)

- Excel Design Tool SLUC072A

| UCC28060 Controller Setup Tool | | |
|---|---|---|
| Note this tool was designed to work with the UCC28060 data sheet design example | | |
| **Please enter design parameters into the** | **shaded** | **cells;** |
| **Calculated results will be in RED** | | |
| **Design Parameters:** | **Variable Names** | |
| Minimum RMS Input Voltage | $V_{IN_MIN}$ | 85 |
| Maximum RMS Input Voltage | $V_{IN_MAX}$ | 265 |
| Minimum Line Frequency | $f_{LINE}$ | 47 |
| Maximum Line Frequency | | 63 |
| Maximum Output Power | $P_{OUT}$ | 300 |
| Full Load Efficiency (Needs to be less than 0.99) | $\eta$ | 0.92 |
| Minimum Switching Frequency | $f_{MIN}$ | 4.50E+04 |
| Output Voltage | $V_{OUT}$ | 390 |

- Additional AppNotes and MathCAD Files in productfolder of UCC28050 / 51


Texas Instruments

# PFC
# TI solves the Interleaving Problems

**UCC28070** **Industrie's First Interleaved CCM Boost PFC**

# UCC28070
# Average CM Interleaved PFC

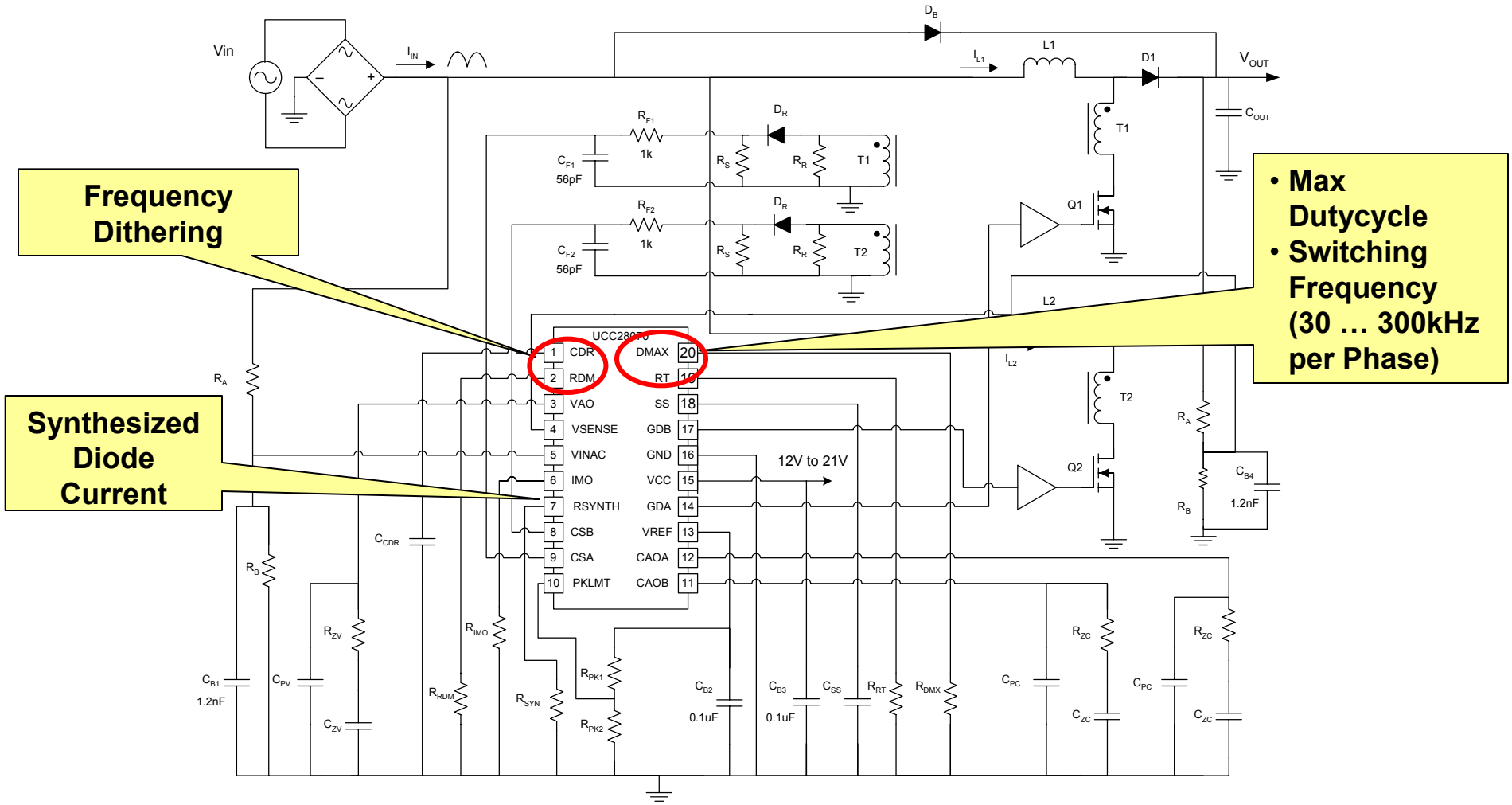




Texas Instruments

# UCC28070 Features

**Has all the customary functions plus some unique features:**

- **Inductor current synthesis using one current transformer per phase**
  - **produces large current signal amplitude**
  - **low power dissipation**
  - **simplifies layout and ground management**
  - **improved protection of Mosfets under inrush transients**
- **Digital $Vin_{RMS}$ feed forward signal:**
  - eliminates low pass filter components
  - improves response time to line transients
  - provides ripple free input to the multiplier
- **Variable Gain Error Amplifier:**
  - **Greatly improved transient response**
- **Spread Spectrum Modulation for reduced EMI**

# Current Syntheses Reduces Component Count

- **Traditional Current Sensing in PFC Boost**
  - ✓Requires a CT network in series with Q1
  - ✓Requires a CT network in series with D3
- **UCC28070 Synthesizes Diode Current**
  - ✓Setup with Single Resistor to Gnd ($R_{SYN}$)
  - ✓**Removes CT network in series with D3**
  - ✓**6 components are eliminated in interleaved configuration**
    - ❖**Results in a cheaper BOM cost**

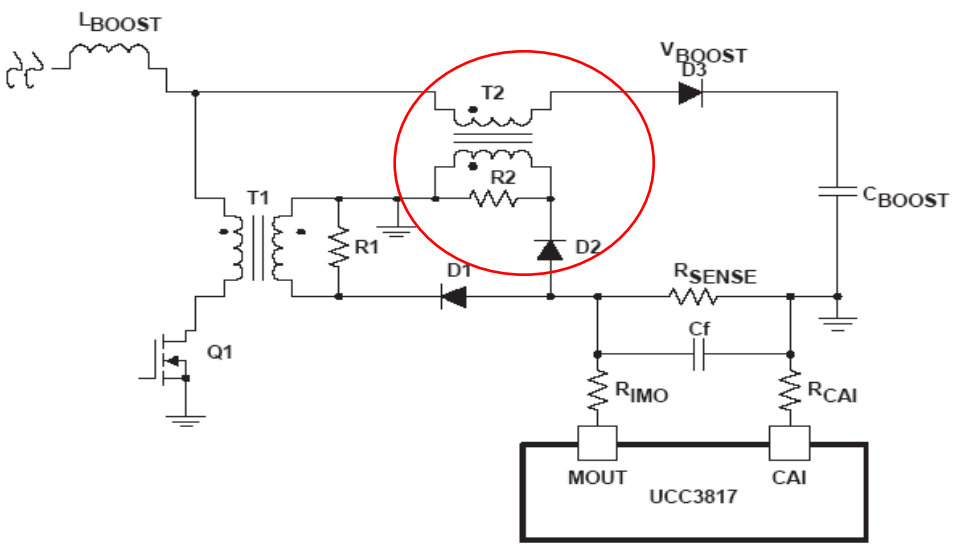


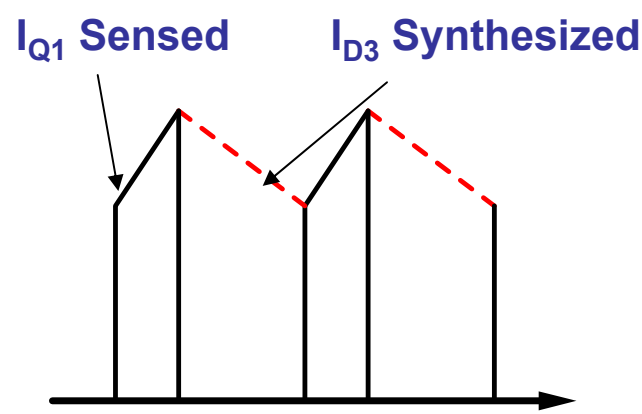




Texas Instruments

# UCC28070 - Frequency Dithering

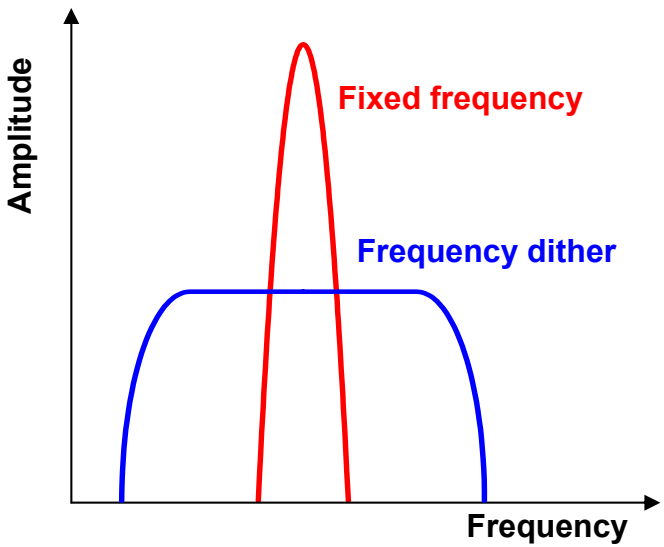


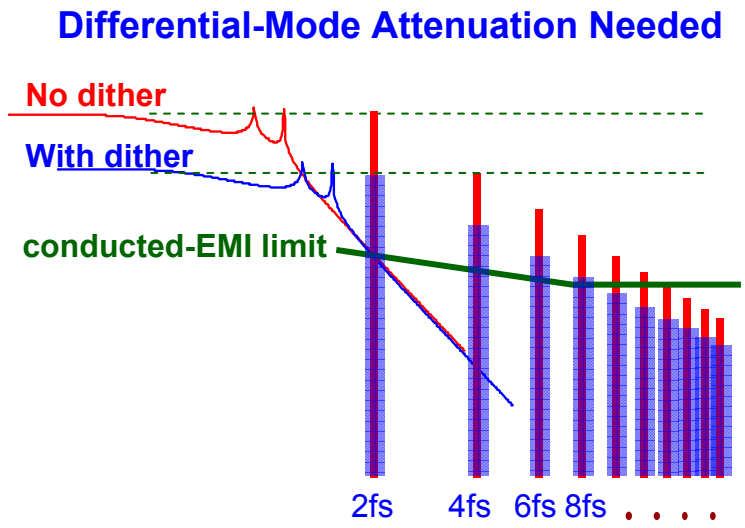


- Lower amplitude noise allows use of smaller DM filter
- Alternatively, may be used to increase margin to emissions limits.

# UCC28070
# Multiple Phase Interleaved Solution

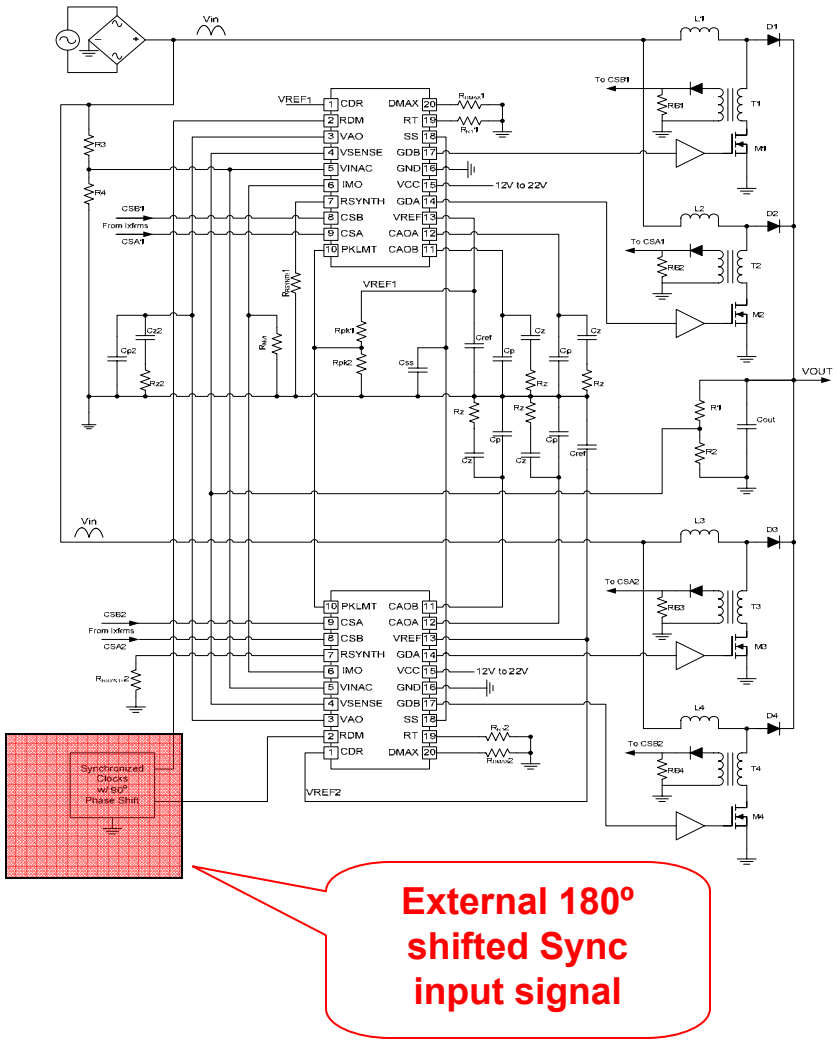


External 180º shifted Sync input signal

- Expanding phases from 2 - 4 is easy
  - ✓ 180º synchronization of oscillators
  - ✓ Continuously Improved input/output ripple reduction
  - ✓ Higher Power Density Design Possible
  - ✓ Better Thermal Management



Texas Instruments

# UCC28070
# Application & Design Tools

- Detailed Application Note SLUA479
- 300 W Evaluation Module SLUU312
  - ✓ Same Power Requirement as UCC28060
- ✓ UCC28070 Video Cast SLUC083
- Excel Design Tool SLUC114
  - ✓ Theoretical Small Signal Analysis

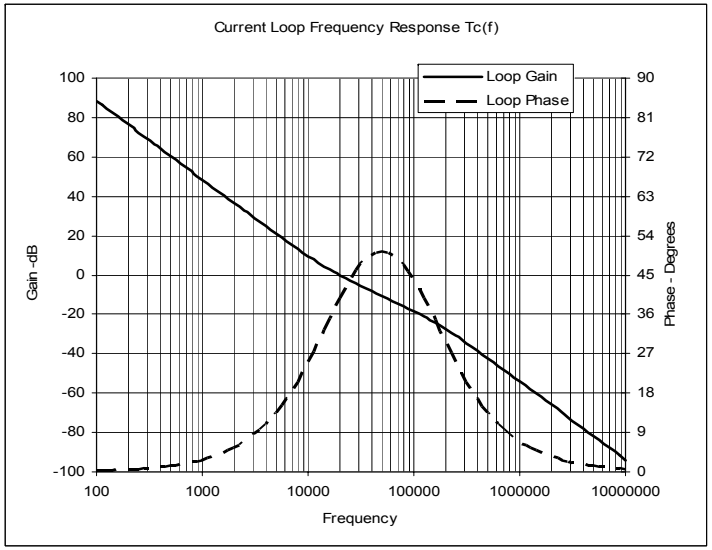


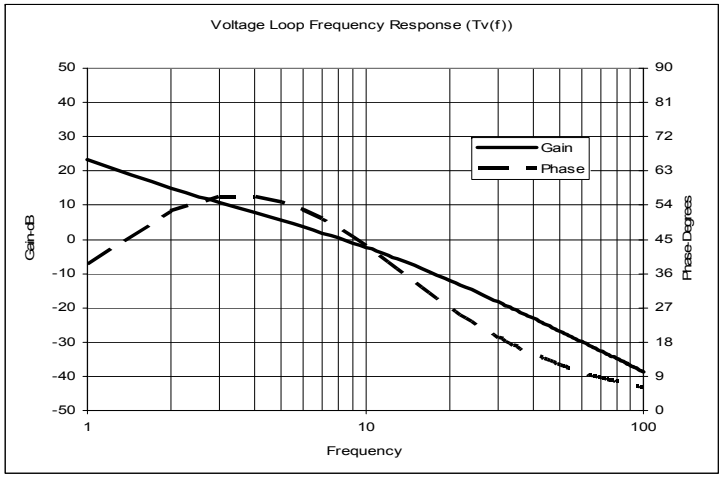




Texas Instruments

# UCC28070 – 1.2kW Design with Phase Management

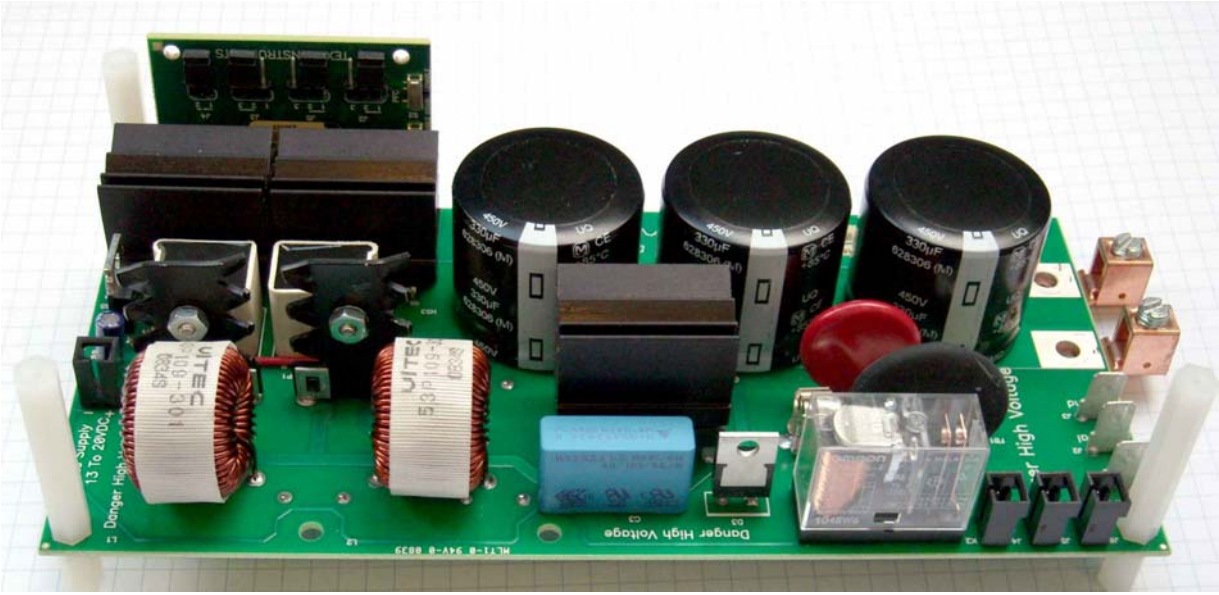


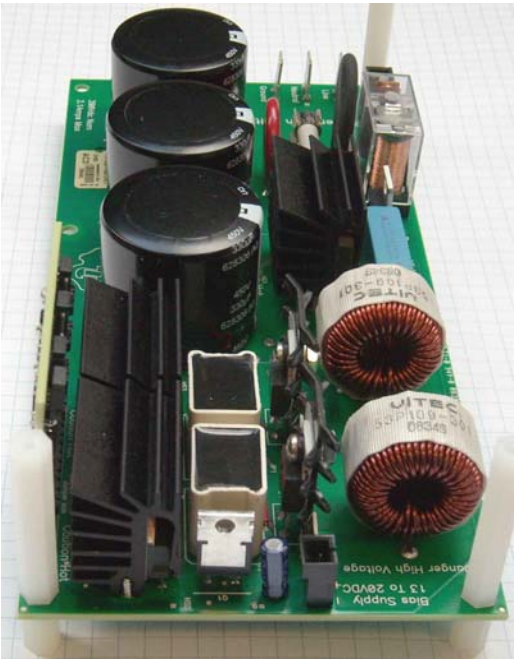


**PR779 / 780**



Texas Instruments

# UCC28070 – 1.2kW Design

Phase Management Ensures

**Highest Efficiency under all Load Conditions**

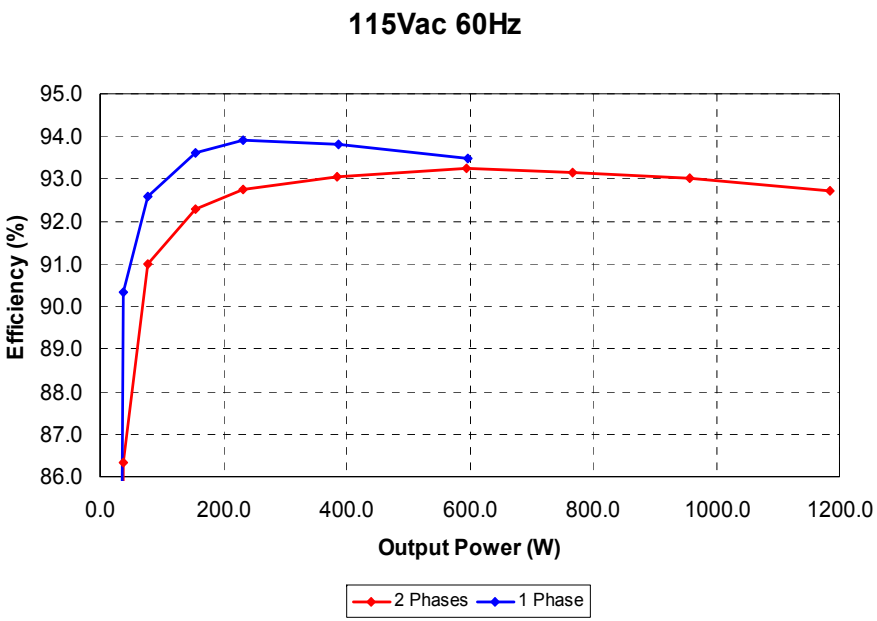


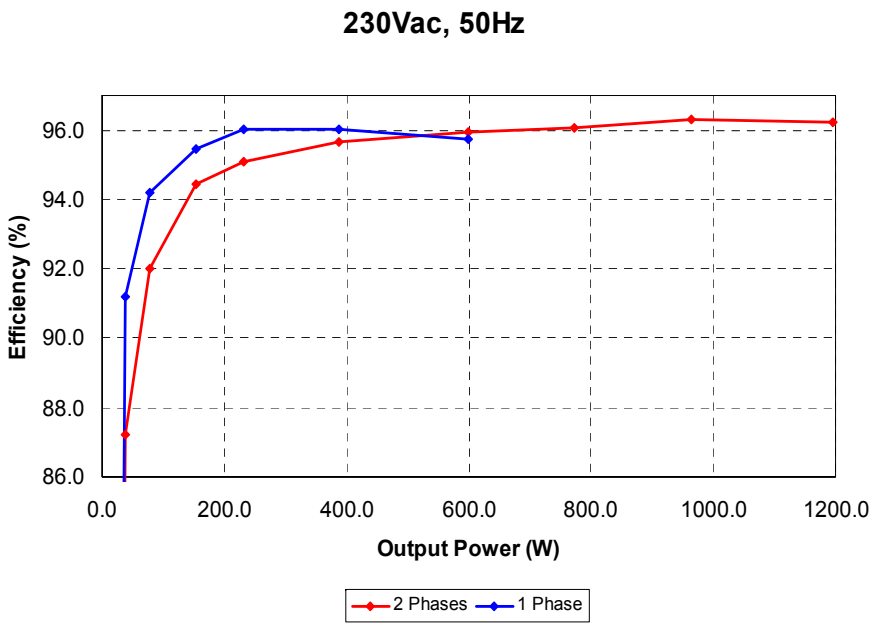

# UCC28070 – 1.2kW Design

## Phase Management

– **Neglectable VOUT deviation (<1V) under phase transition !**

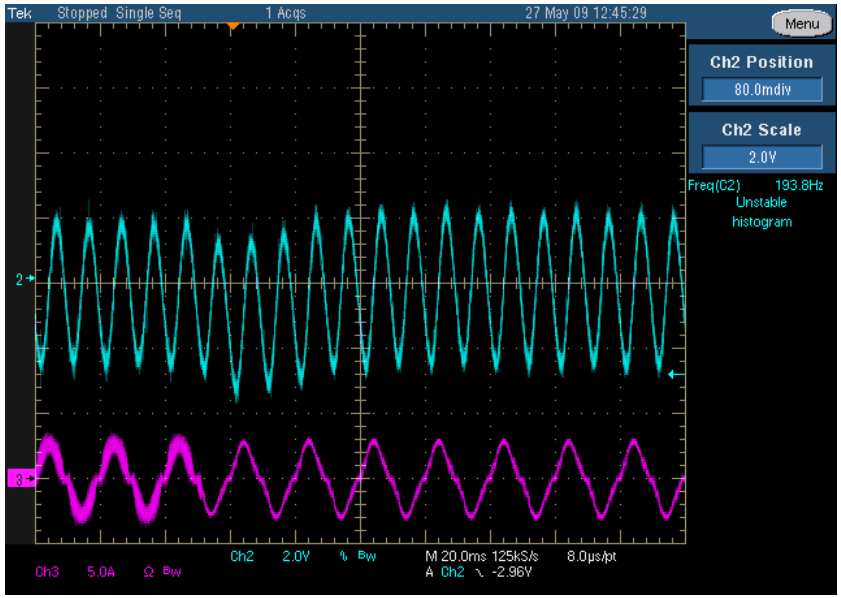


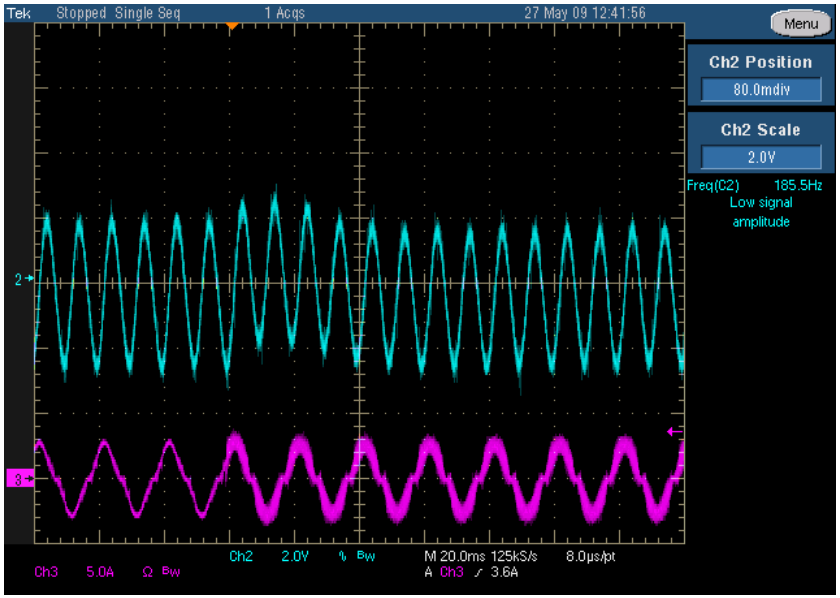


VIN: 230VAC (worst case)
VOUT: 390V
POUT: 600W

- Power Density & Efficiency
- **Solutions for AC/DC Power Supplies**
  - Green Mode Bias supply
  - PFC
  - **LLC Half Bridge**
  - Bus Converter
- Efficiency Gain by MOSFET- Selection
- Summary

# LLC Half Bridge

**UCC25600** 8-Pin Optimized High Performance
**LLC HB Resonant Mode Controller**

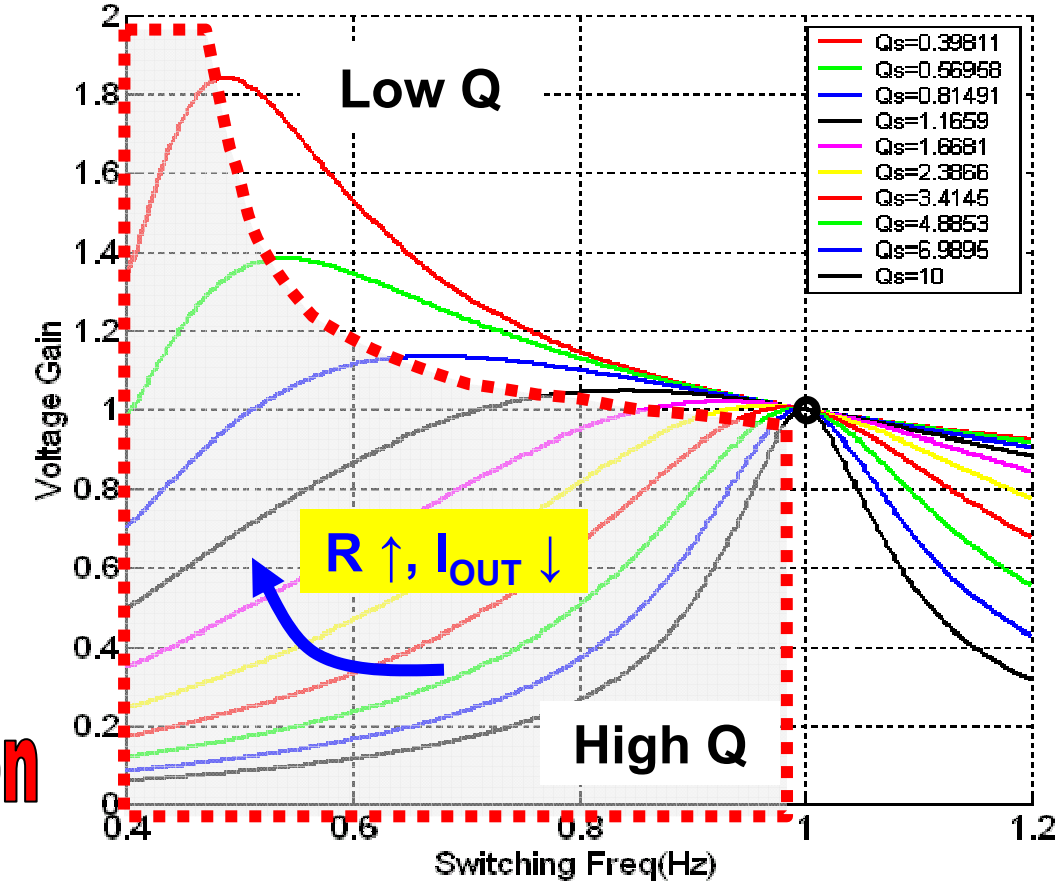


**ZVS region**

**ZCS region**

$$Q = \frac{\sqrt{Lr/Cr}}{n^2 R}$$



Texas Instruments

# LLC Resonant HB – The Details

**Inductor Ratio**

$$L_n = \frac{L_m}{L_r}$$

**Resonant Frequency**

$$f_0 = \frac{1}{2\pi\sqrt{L_r C_r}}$$

**Transformer Turns-Ratio**

$$n = \frac{V_{in}/2}{V_o}$$

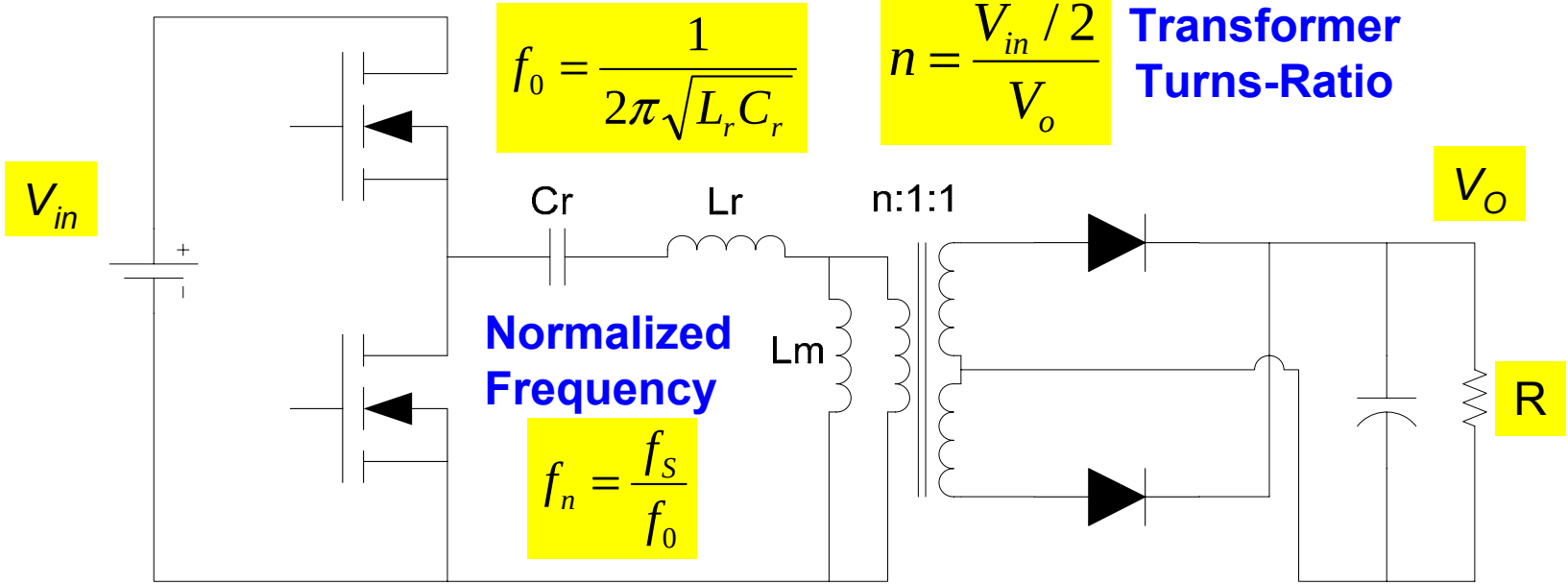


**Normalized Frequency**

$$f_n = \frac{f_S}{f_0}$$

**Quality Factor**

$$Q = \frac{\sqrt{Lr/Cr}}{n^2 R}$$

**Voltage Gain**

$$g = \frac{n \cdot V_O}{V_{in}}$$



Texas Instruments

# LLC Resonant HB – ZVS or ZCS an Important Decision:?

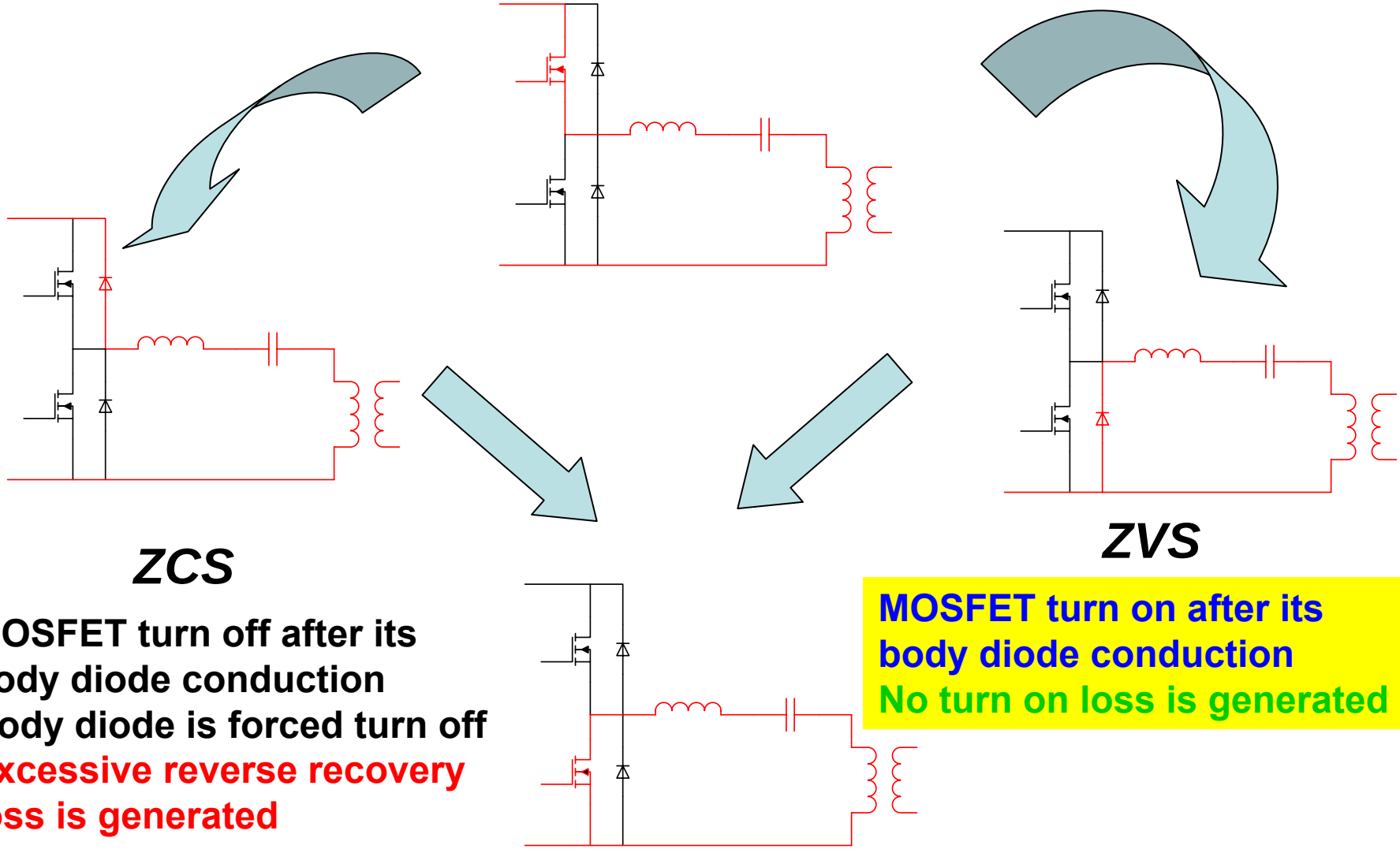

***ZCS***

**MOSFET turn off after its body diode conduction**
**Body diode is forced turn off**
**Excessive reverse recovery loss is generated**

***ZVS***

**MOSFET turn on after its body diode conduction**
**No turn on loss is generated**



Texas Instruments

# UCC25600 Application Circuit

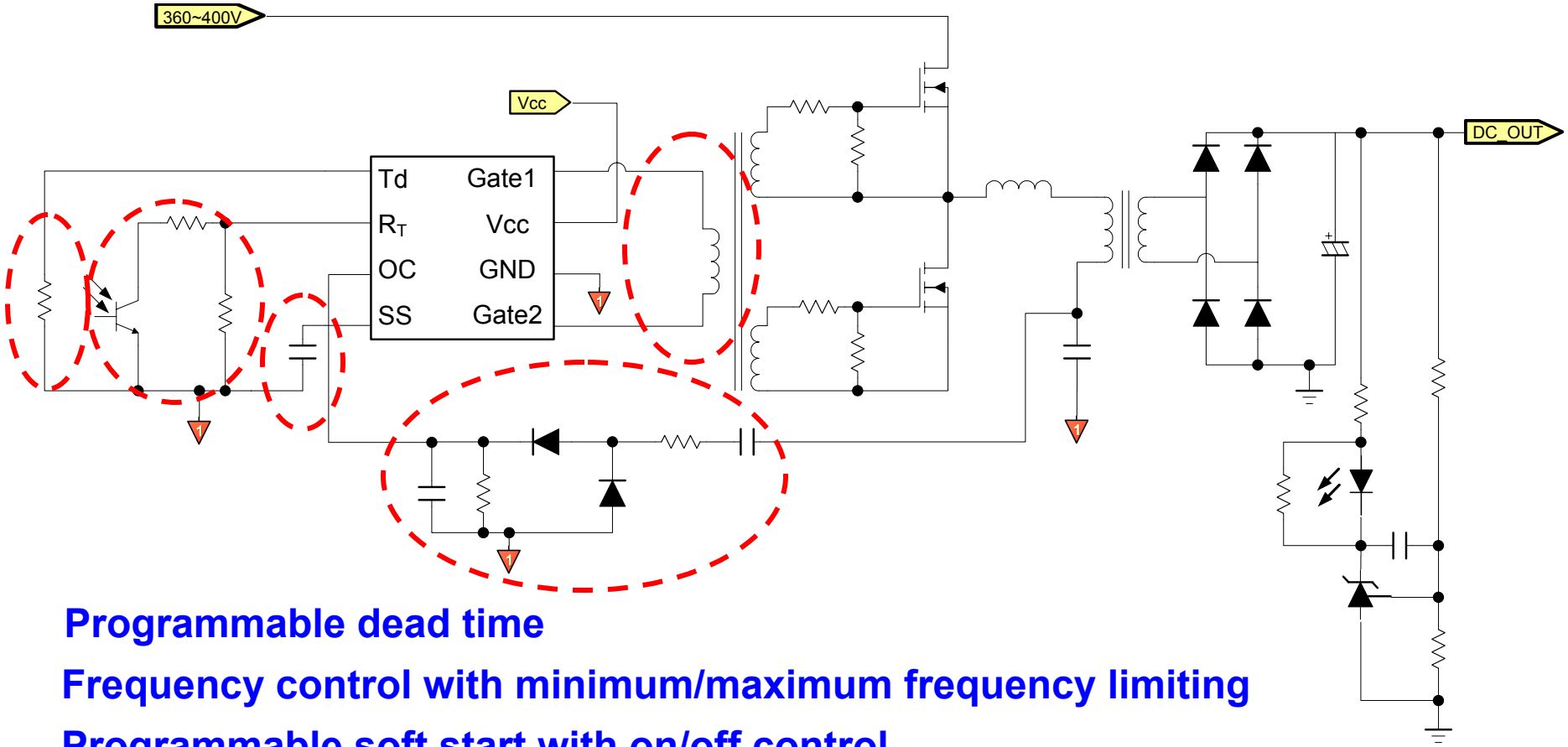


**Programmable dead time**

**Frequency control with minimum/maximum frequency limiting**

**Programmable soft start with on/off control**

**Two level over current protection, auto-recovery and latch up**

**Matching output with 50ns tolerance**



Texas Instruments

# UCC25600 – 300W EVM Performance

## VIN: 390VDC,  VOUT:12V

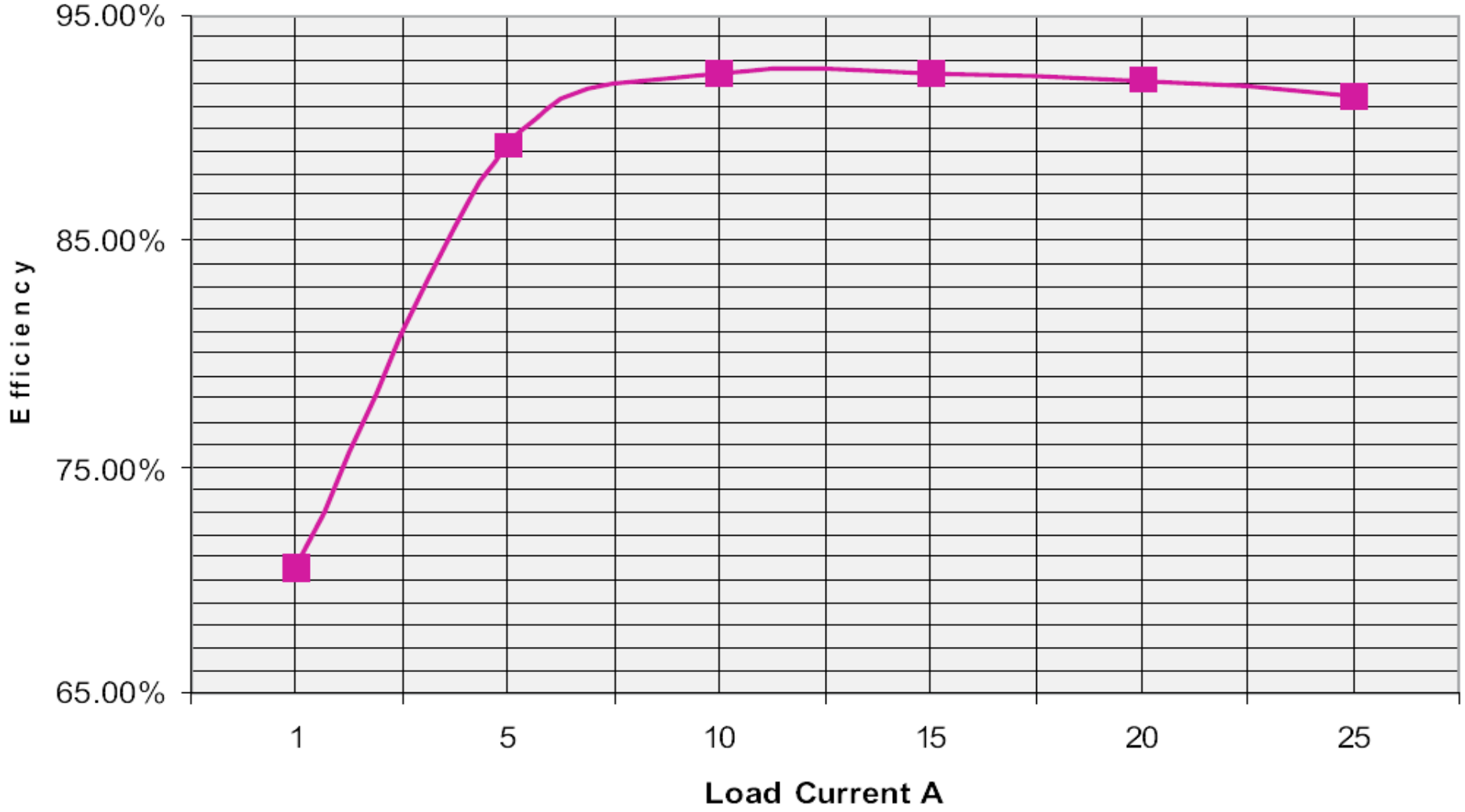




Texas Instruments

- Power Density & Efficiency
- **Solutions for AC/DC Power Supplies**
  - Green Mode Bias supply
  - PFC
  - LLC Half Bridge
  - **Bus Converter**
- Efficiency Gain by MOSFET- Selection
- Summary

# Intermediate Bus Controller Applications for the UCC28230 (1)

Multiple Output AC/DC power supply solutions:
Server, Medical & Industrial

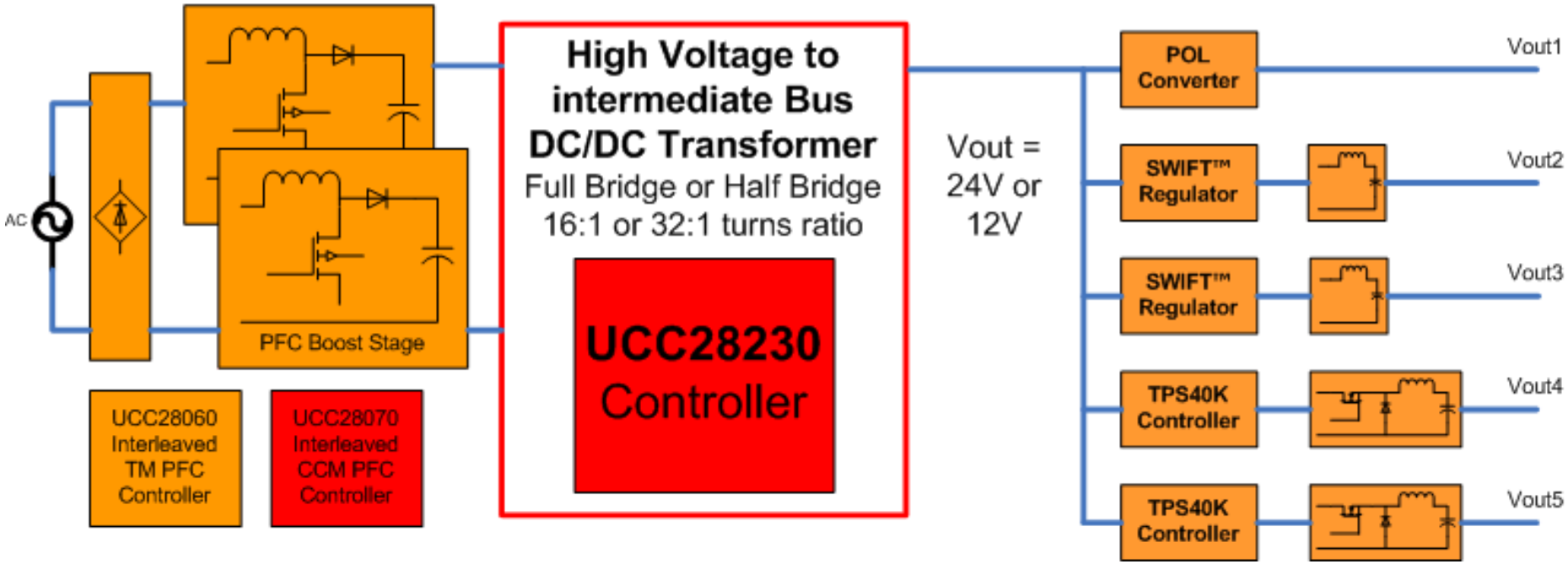

# Intermediate Bus Controller Applications for the UCC28230 (2)

High Efficiency Three-Stage conversion

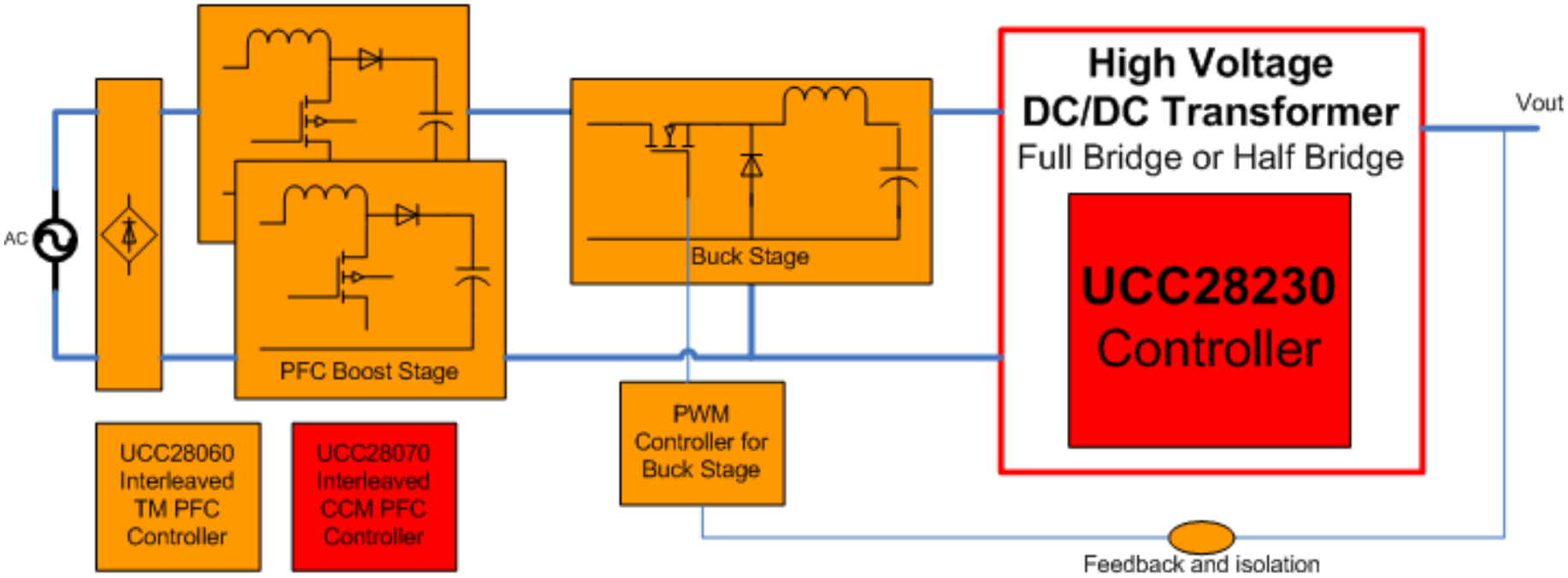

# UCC28230/1: Main Features

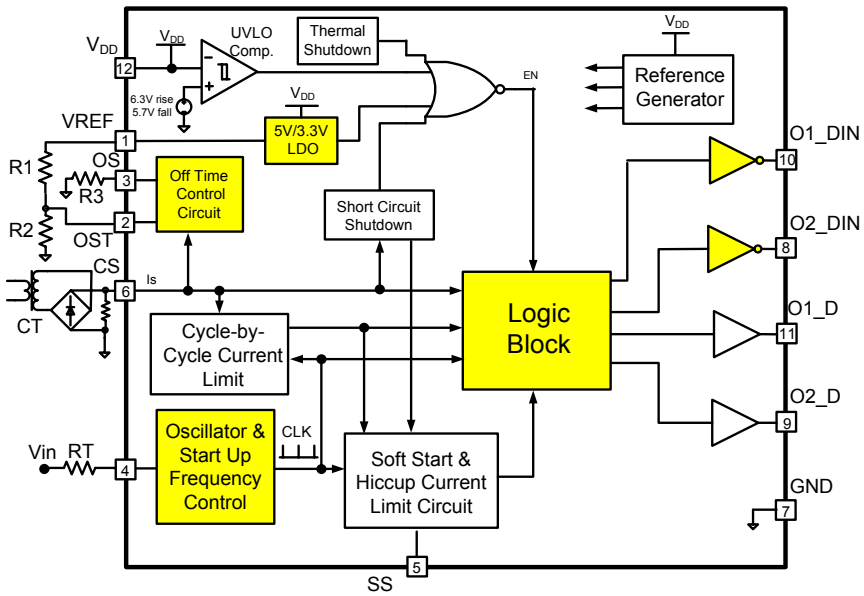


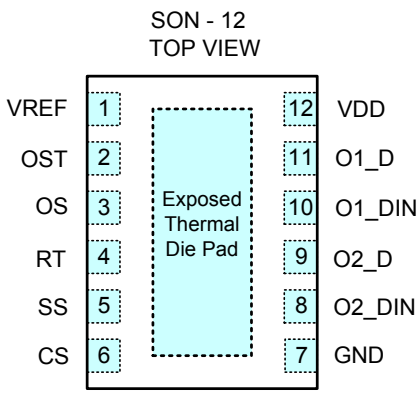


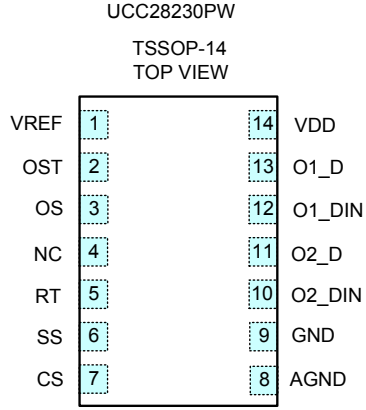


- Frequency Controlled Start Up for Small Output Inductor, Low Ripple and Constant Current Start with Large Output Capacitor
- Programmable, Load Depended Off Time Control
- Two, 1.5% Accuracy Linear Regulator Options: 5-V for UCC28230 and 3.3-V for UCC28231
- Two 0.2-A Push-Pull Outputs Provide Matched Control Signals D to External Drivers
- Two Additional 1- D Outputs for Optimal Use of Self-Driven Rectifiers
- Unregulated, Fixed Volt-Second or Fixed Frequency Modes set by User
- Resistor Programmable Oscillator Frequency up to 2 MHz
- Cycle-by-Cycle Current Limit Allows Parallel Operation with Droop Based Current Sharing
- Single External Capacitor sets Soft-Start and Over Current Hiccup Mode Parameters with Restart
- Severe Short Circuit Hiccup or Latch Off Protection
- Input Under Voltage Lock Out
- 3mm x 2mm DFN-12 and TSSOP packages available

# UCC28230/1: Key Features

- **Start Up Frequency Control** – Limits output inductor ripple, allows start at constant current with smaller inductor, provides higher efficiency and lower cost solution
- Load Current Dependent Off Time – Optimized efficiency across entire load. Also allows lower $V_{DS}$ rectifier FETs.
- 1-D Outputs – Keeps self driven rectifiers under control during start up, shut down and transient modes of operation by clamping primary winding.
- Precise 1.5% 5V/3.3V Output – No need for external regulator to power housekeeping functions.
- **Matched Output Signals** – Specifically designed logic block provides symmetrical operation, better flux balancing, higher efficiency, smaller size
- Fixed Volt-Second or Fixed Frequency Operation – Fixed V•S minimizes transformer size

# UCC28230/1: Start Up Frequency Control

- The Start Up frequency control maintains almost constant output inductor current over duty cycle range from 0 to 1
- For example this allows a 0.1µH instead of a 0.5µH output inductor at 100kHz switching frequency
- The difference in size for these inductors is shown below:

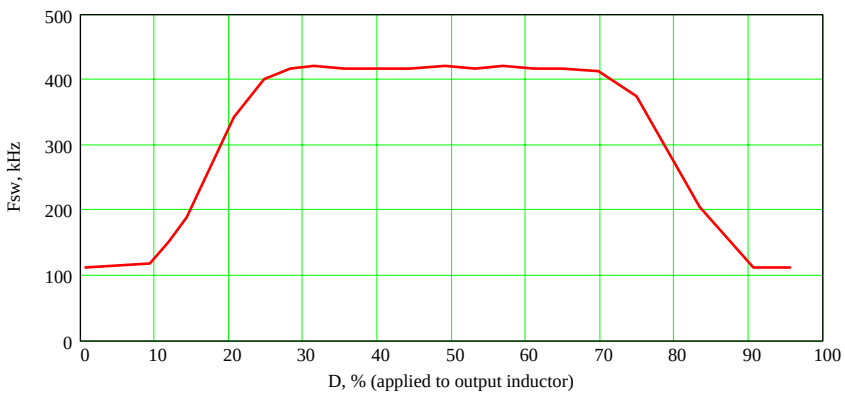


0.1µH, 55A

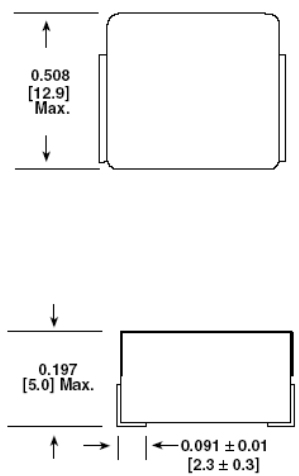


0.5µH, 60A

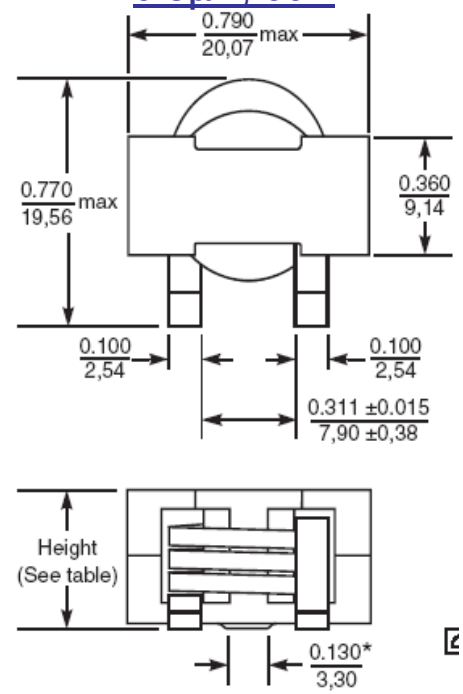




Texas Instruments

# UCC28230/1: Matched Output Signals

Design of the Output and Off Time Logic provides accurate symmetrical pulses to avoid transformer flux unbalancing caused by the controller

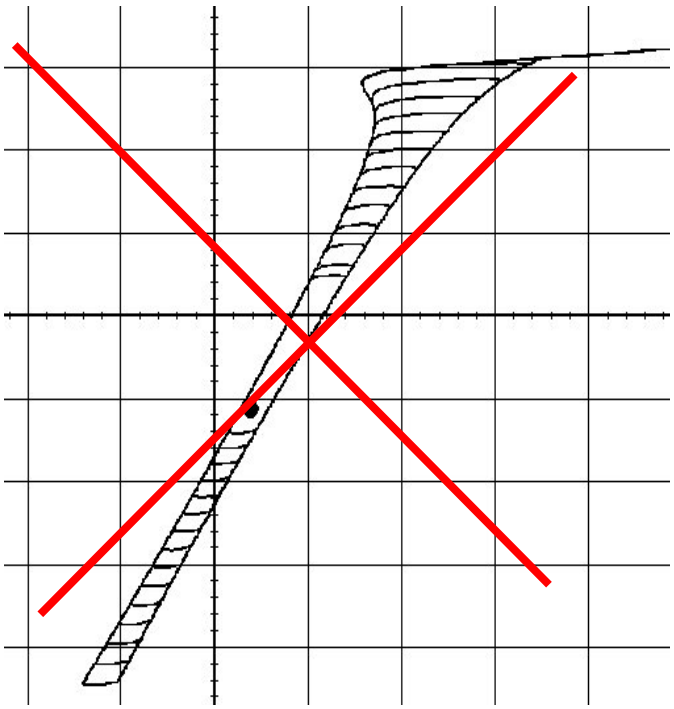

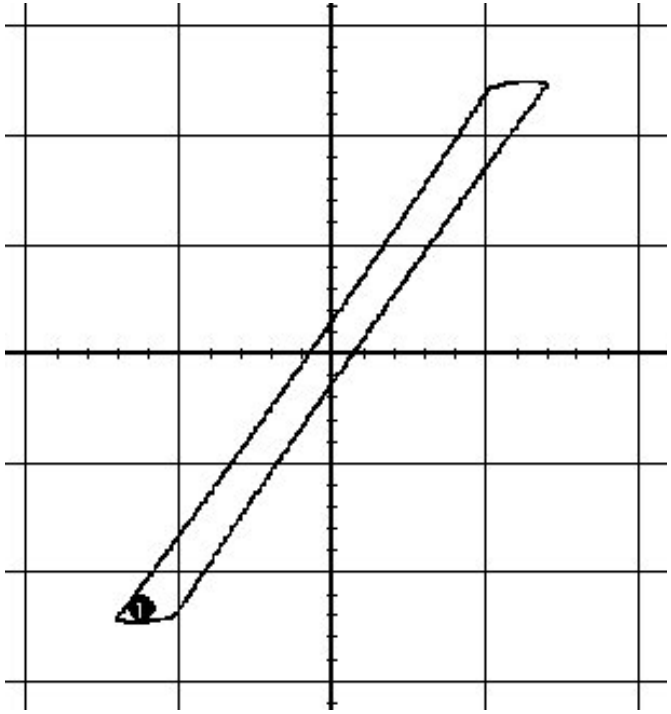



Texas Instruments

# Intermediate Bus Controller 300W ( … 500W) EVM w/ UCC28230

## 300W in a Quarter Brick Module Form Factor !!!

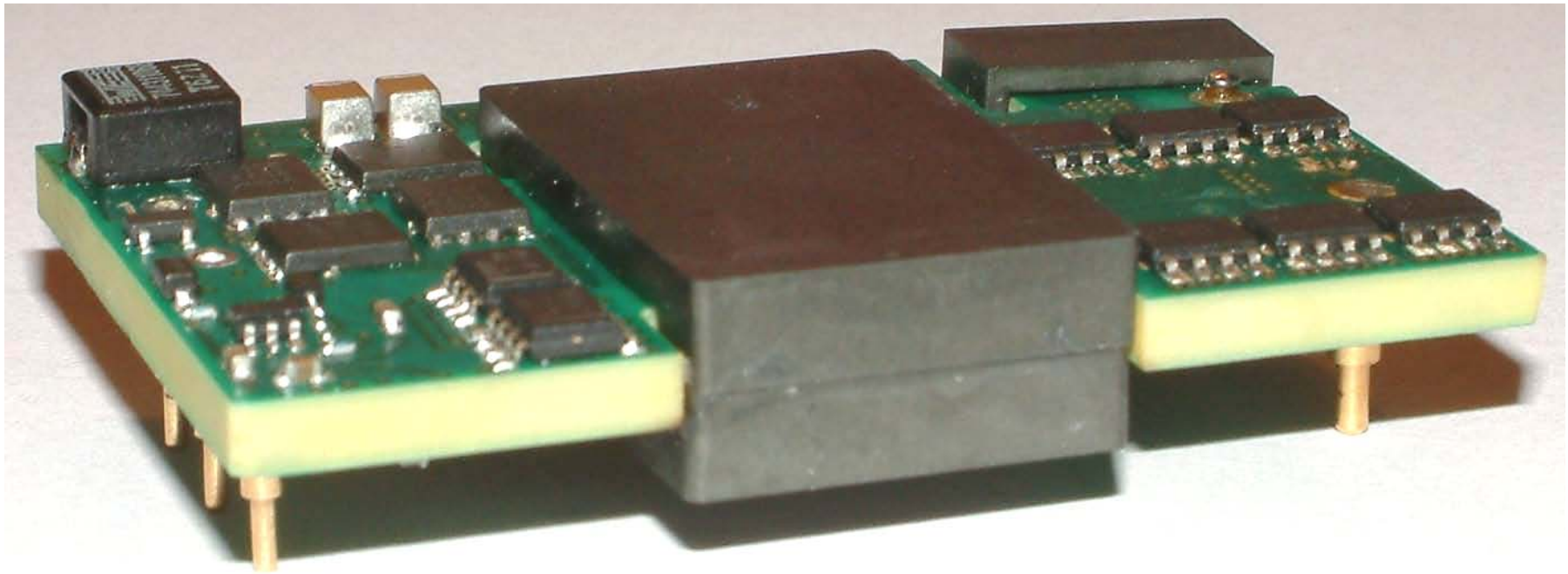

# Efficiency

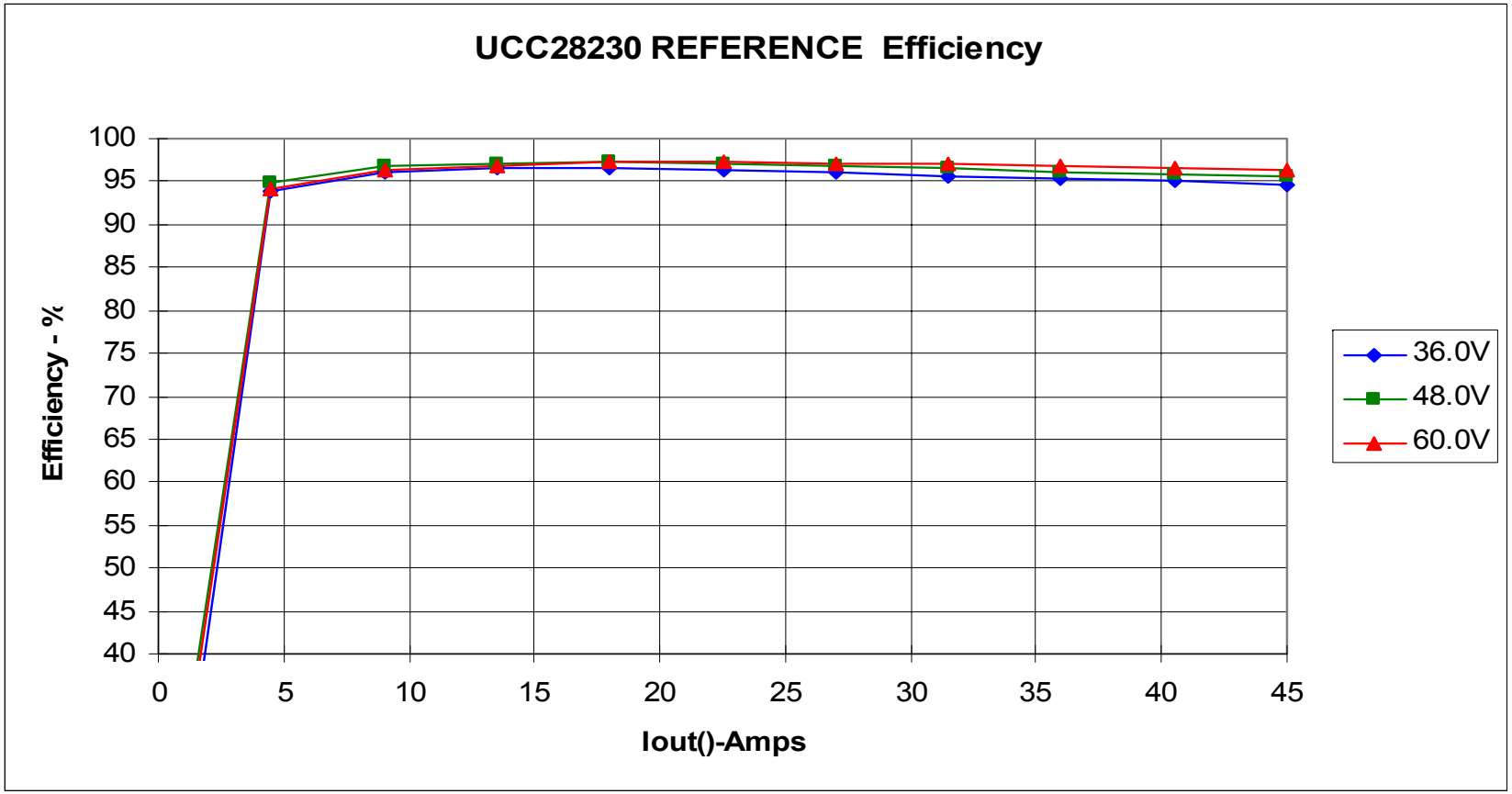
UCC28230 REFERENCE Efficiency
Efficiency - %
100
95
90
85
80
75
70
65
60
55
50
45
40
0
5
10
15
20
25
30
35
40
45
Iout()-Amps
36.0V
48.0V
60.0V

- Power Density & Efficiency
- Solutions for AC/DC Power Supplies
  - Green Mode Bias supply
  - PFC
  - LLC Half Bridge
  - Bus Converter
- **Efficiency Gain by MOSFET- Selection**
- Summary

# NexFET™ – Next Generation High-Efficiency Power MOSFETs

www.ti.com/mosfet

| Part Number | Datasheet | Channel | $V_{ds}$ | $V_{gs}$ | Typical $R_{ds(on)}$ (mΩ) @ 10V | @ 4.5V | @ 2.5V | @ 1.8V | @ 1.5V | Typical $Q_g$ @ 4.5V (nC) | Typical $Q_{gd}$ (nC) | Samples |
|---|---|---|---|---|---|---|---|---|---|---|---|---|
| **QFN 3x3** | | | | | | | | | | | | |
| Single | | | | | | | | | | | | |
| CSD16411Q3 | | N | 25 | 16 | 8 | 12 | | | | 2.9 | 0.7 | Order |
| CSD16409Q3 | | N | 25 | 16 | 6.2 | 9.5 | | | | 4.0 | 1.0 | Order |
| CSD16406Q3 | | N | 25 | 16 | 4.2 | 5.9 | | | | 5.8 | 1.5 | Order |
| Single | | | | | | | | | | | | |
| CSD25401Q3 | | P | 20 | 12 | | 8.7 | 13.5 | | | 8.8 | 2.1 | Order |
| **QFN 5x6** | | | | | | | | | | | | |
| Single | | | | | | | | | | | | |
| CSD16412Q5A | | N | 25 | 16 | 9.0 | 13.0 | | | | 2.8 | 0.7 | Order |
| CSD16410Q5A | | N | 25 | 16 | 6.8 | 9.6 | | | | 3.9 | 1.1 | Order |
| CSD16404Q5A | | N | 25 | 16 | 4.1 | 5.7 | | | | 6.5 | 1.7 | Order |
| CSD16413Q5A | | N | 25 | 16 | 3.1 | 4.1 | | | | 9.0 | 2.5 | Order |
| CSD16403Q5A | | N | 25 | 16 | 2.2 | 2.9 | | | | 13.3 | 3.5 | Order |
| CSD16407Q5 | | N | 25 | 16 | 1.8 | 2.5 | | | | 13.3 | 3.5 | Order |
| CSD16414Q5 | | N | 25 | 16 | 1.5 | 2.1 | | | | 16.6 | 4.4 | Order |
| CSD16401Q5 | | N | 25 | 16 | 1.3 | 1.8 | | | | 21.0 | 5.2 | Order |

Industry's best FOM

Lowest losses even @ high frequency

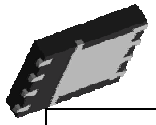

# NexFET™ Highlights

- **Low Rds(ON)**
- **Lowest Qg & Qgd**
  - Enables fastest switching and lowest switching & driver losses
- **Industrie's lowest FOM**
- **Flat Rds(ON) vs Vgs curve**
  - Enables lowest driver losses by using low gate drive voltage
  - Ensures low conduction losses
- **Low Qgd/Qgs**
  - Avoids dV/dt based shoot through

# Double Frequency – Same Performance

**Efficency @ $V_{IN}$ = 12V, $V_O$ = 1.3V, $L_O$ = 0.3µH, $T_A$ = 25°C**

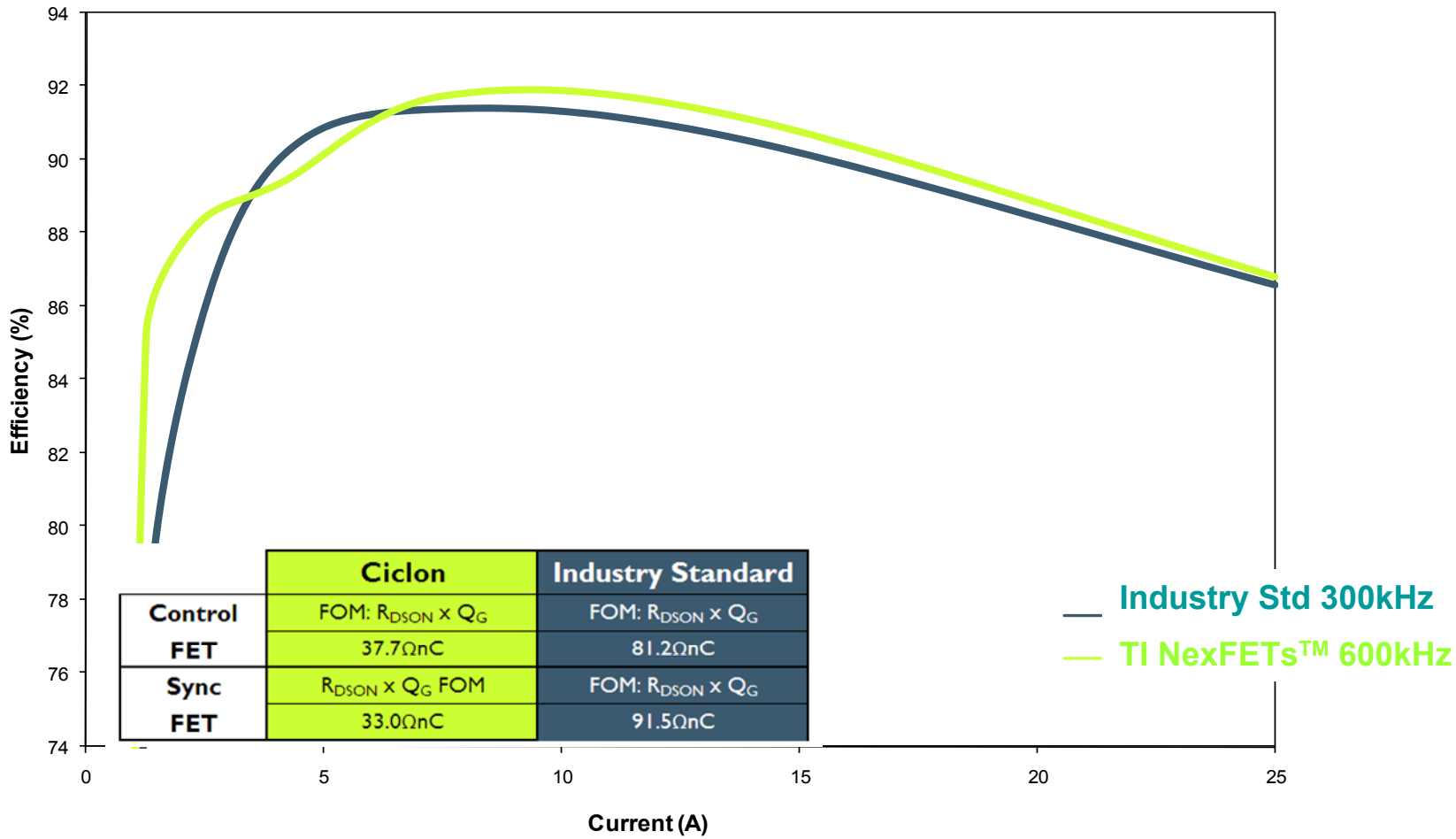


| | Ciclon | Industry Standard |
|---|---|---|
| Control FET | FOM: $R_{DSON} \times Q_G$ 37.7ΩnC | FOM: $R_{DSON} \times Q_G$ 81.2ΩnC |
| Sync FET | $R_{DSON} \times Q_G$ FOM 33.0ΩnC | FOM: $R_{DSON} \times Q_G$ 91.5ΩnC |

# Higher Efficiency Ensures Cooler Systems

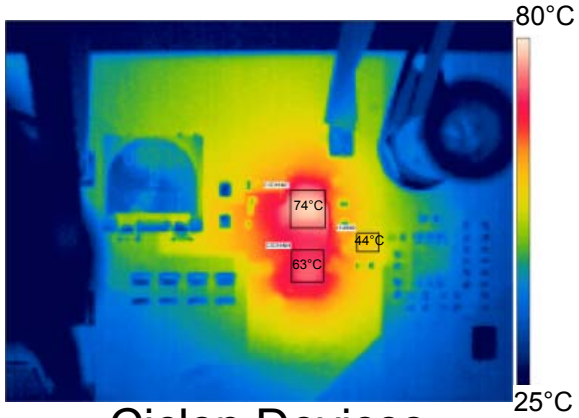


Ciclon Devices

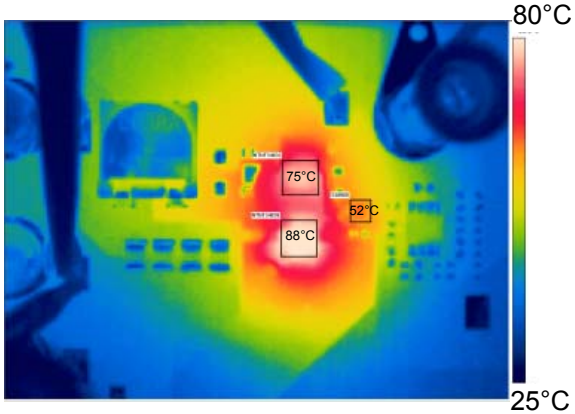


Industry Standard Devices

- Up to 30% cooler operation of MOSFET
- Up to 15% cooler driver operation
- Increased Reliability

# Gate Drive Loss & Drive Voltage

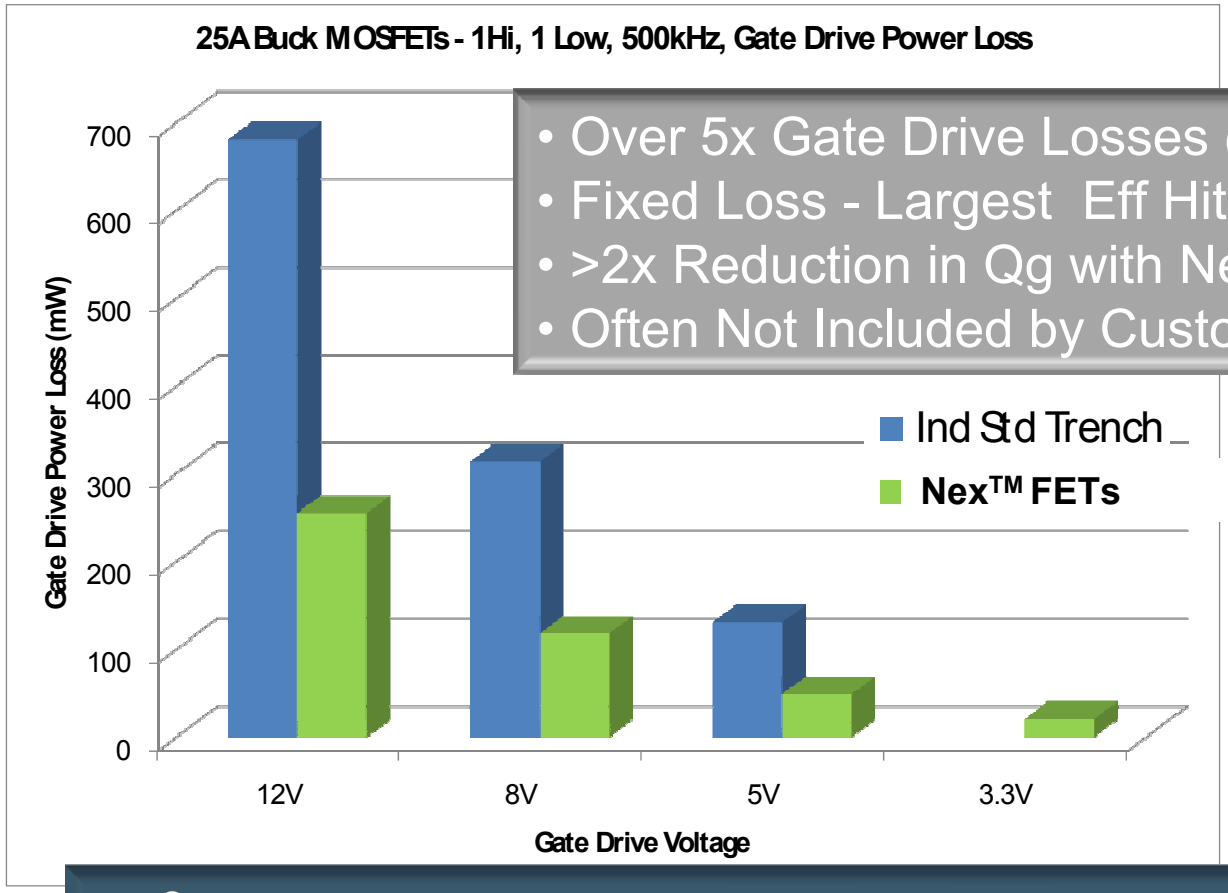


- Over 5x Gate Drive Losses @ 12V vs 5V
- Fixed Loss - Largest Eff Hit at Light Load
- >2x Reduction in Qg with NexFET™ devices
- Often Not Included by Customer!!!

$V^2$ Relationship of Drive Voltage to Energy wasted

$E = CV^2$

# Summary

- Power Density & Efficiency
- Solutions for AC/DC Power Supplies
  - Green Mode Bias supply
  - PFC
  - LLC Half Bridge
  - Bus Converter
- Efficiency Gain by MOSFET- Selection