Power for Portable Devices

Agenda

- **General Thoughts**
- Linear Regulators
- Switch Mode Regulators
- Buck Converter Solutions
- Boost Converter Solutions
- Buck-Boost & Other Converter Solutions
- Power Multiplexing
- Voltage Supervision

General Thoughts

- Size
- End-Application
- Battery Power Related:
  - Type of Batteries
  - Number of Batteries
  - Charge Management
  - Runtime
- Power Supply Solution Related:
  - Switching Frequency, Efficiency
  - Mode of Operation
  - VIN (Range), VOUT, IOUT
  - Topology
  - Sequencing
  - Display Power
- Power Path Management

Battery Operating Voltage Range and System Rails

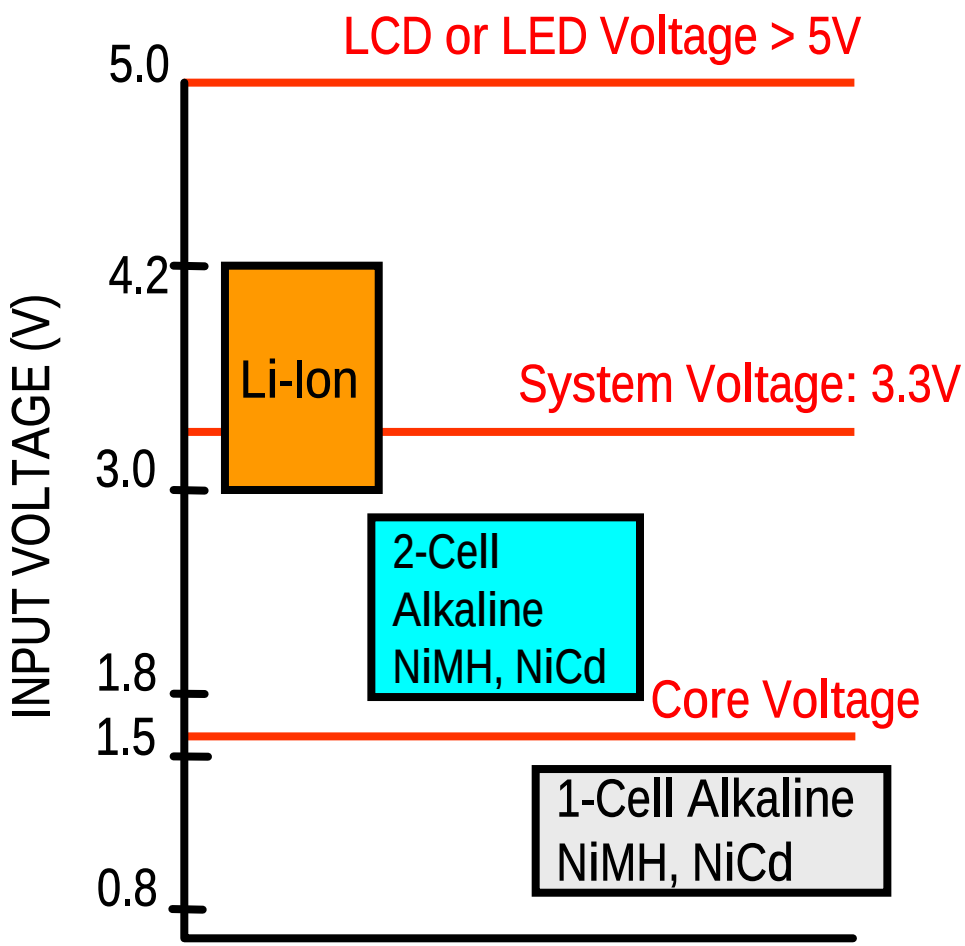

- Need a high Efficiency Power Converter to Meet System Needs

Texas Instruments

Battery Operated System - Block Diagram

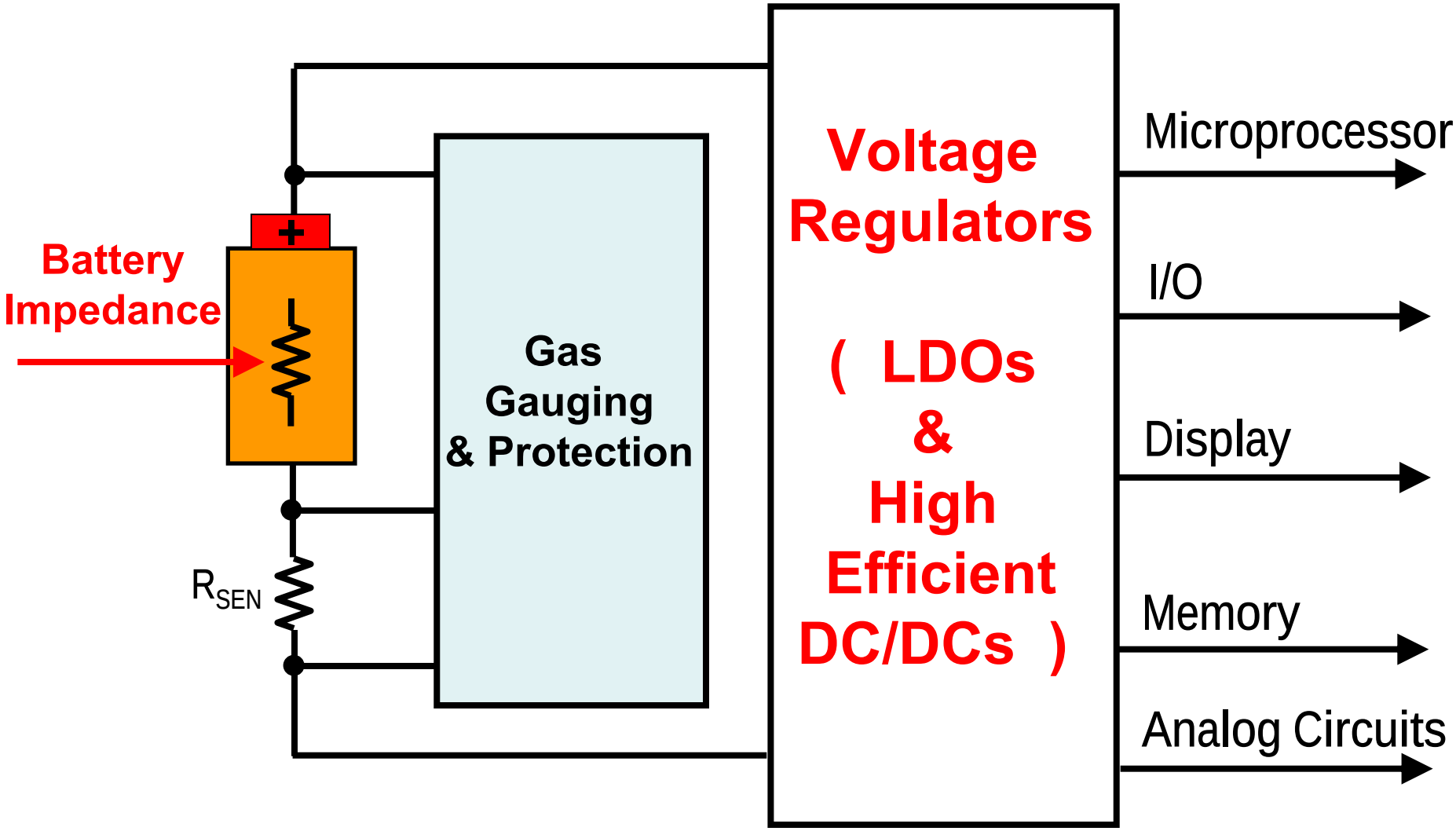

Agenda

- General Thoughts
- **Linear Regulators**
- Switch Mode Regulators
- Buck Converter Solutions
- Boost Converter Solutions
- Buck-Boost & Other Converter Solutions
- Power Multiplexing
- Voltage Supervision

500nA Lowest I_q LDO with DVS

TPS780xx **150mA ; Pin-Selectable Dual VOUT; SOT23 or 2x2QFN**

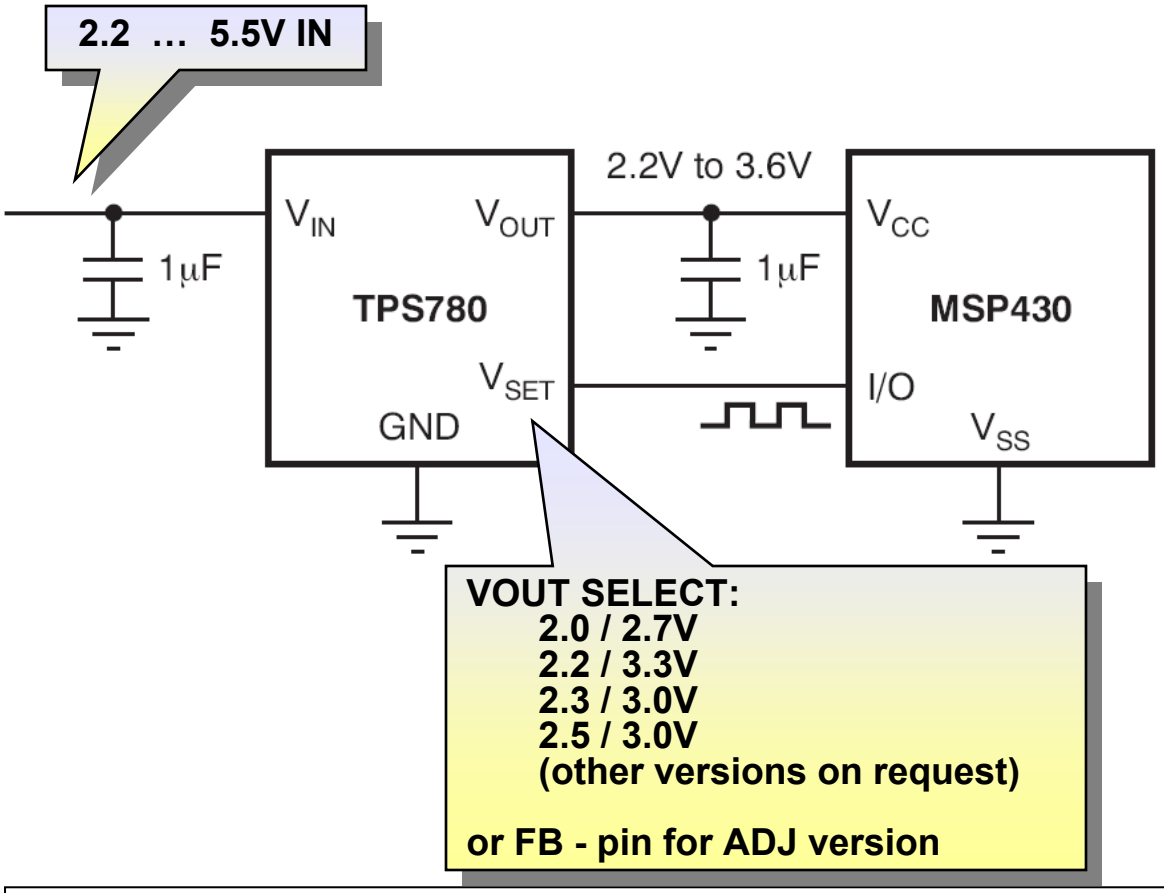

Benefits of DVS

- Ability to switch VCC between 2 preset voltage levels
- Adjusting to a lower VCC results in lower supply current thus prolonging battery life

Texas Instruments

Comparison of Battery Life

TPS780 vs. CR2032 Coin Cell

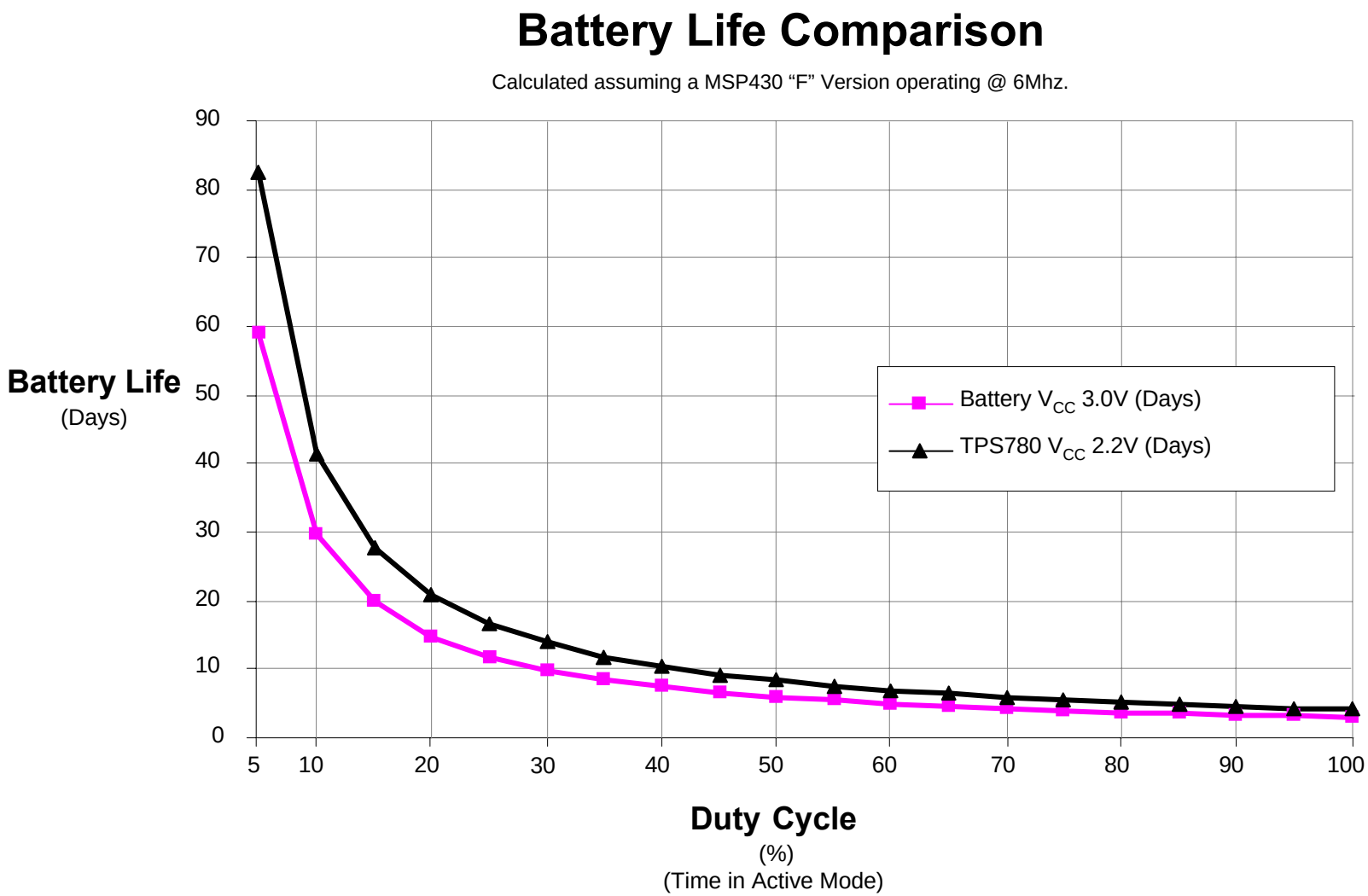

Texas Instruments

3.2µA Low Iq / "High" VIN LDO

TPS715xx **50mA**
Tiny SC-70 Package

http://focus.ti.com/docs/prod/folders/print/tps71501.html

- 2.5V - **24V Input** Operation
- **Ultralow 3.2µA Quiescent Current**
- Stable With any Output Capacitor (>0.47µF)

50mA Version

- Droput Voltage 415mV typ
- 1.8V, **1.9V, 2.3V,** 2.5V, 3.0V, 3.3V, **3.45V** and 5.0V and Adjustable Version (up to 15V output)

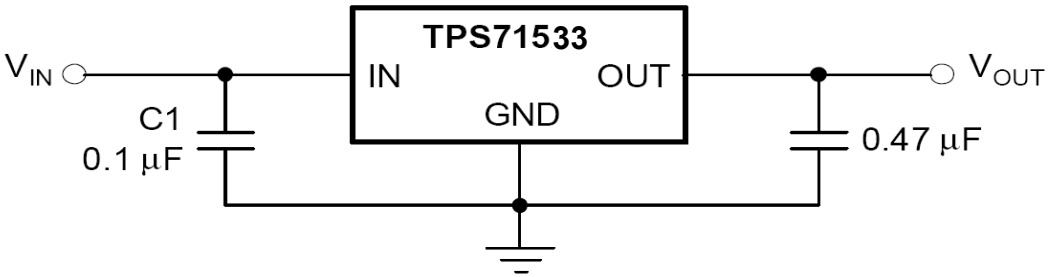

2.1 x 2 mm^2
100 – 130mW @ 85°C

3.2µA Low I_q / Medium & "High" V_{IN} LDO

TPS714xx $10V_{IN}$; 80 mA; SC70 & SON6
TPS715Axx $24V_{IN}$; 80 mA; SON6 & SON8

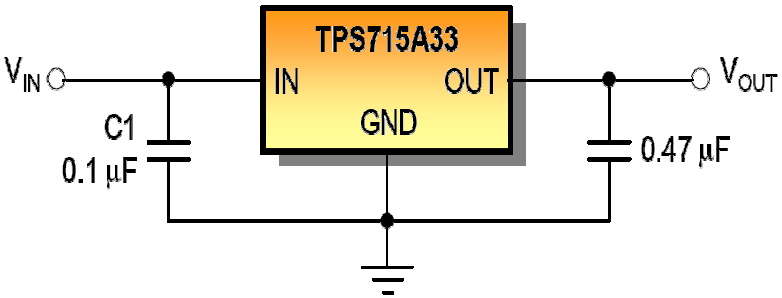

- **Low 3.2µA Quiescent Current**
- **Min. Input Voltage:** **2.5V (10mA OUT)**
  3V (80mA OUT)
- Droput Voltage @ 80mA: 670mV typ, 1.12V max
- Output Voltages
  TPS714xx: **Adj. 1.19 – 8.8V** & Fixed 3.3V
  TPS715Axx: **Adj. 1.2 – 15V** & Fixed 3.3V
- **Stable With any Output Capacitor >0.47µF**

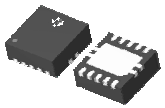

3 x 3 mm^2 SON8
1000mW @ 85°C

2 x 2 mm^2 SON6
620mW @ 85°C

2 x 2.1 mm^2
SC70
100mW @ 85°C

Low VIN System Power LDOs

Device	Power Path V_{IN} Max (V)	I_{OUT} (A)	V_{DO} (mV)
TPS720	1.1 - 4.5	0.35	110
TPS747	0.8 - 5.5	0.50	50
TPS742	0.8 - 5.5	1.5	55
TPS743	0.8 - 5.5	1.5	55
TPS748	0.8 - 5.5	1.5	60
TPS744	0.8 - 5.5	3	115
TPS749	0.8 - 5.5	3	120

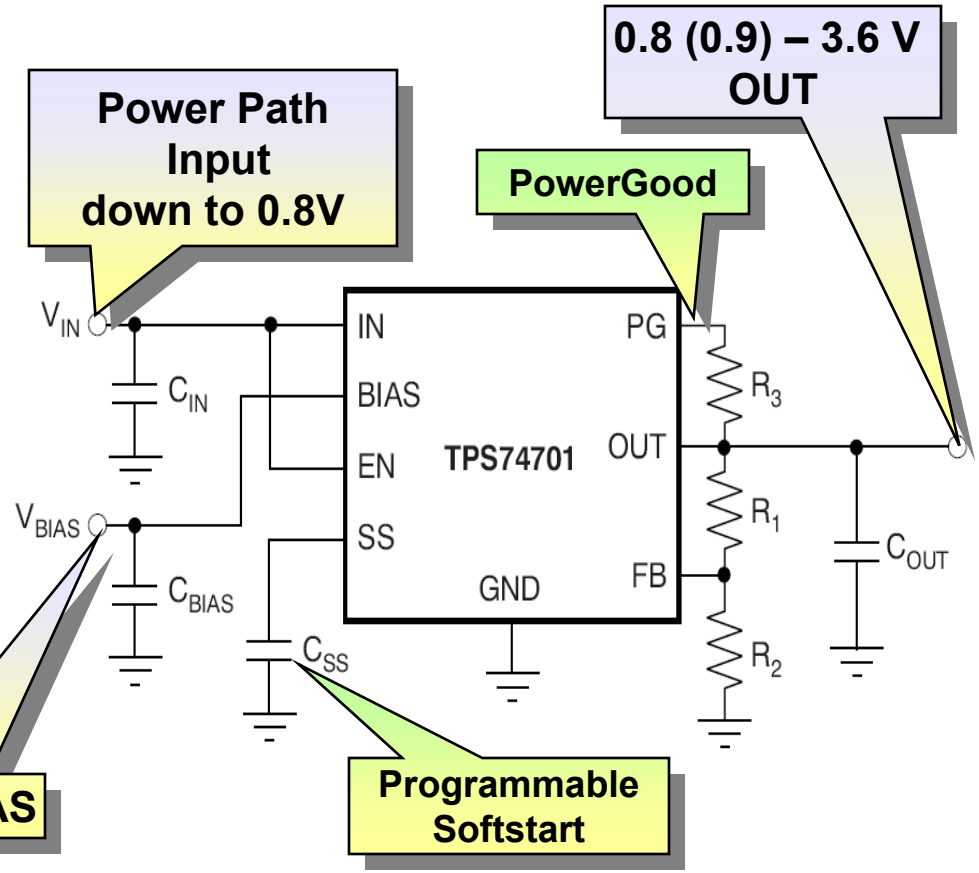

By using available system voltages as BIAS, these LDOs can achieve high efficiencies: η = VOUT / PowerPath VIN .
In some cases they can perform as good as switching regulators, but are much simpler to be used!

Texas Instruments

Ripple & Noise – A System Issue

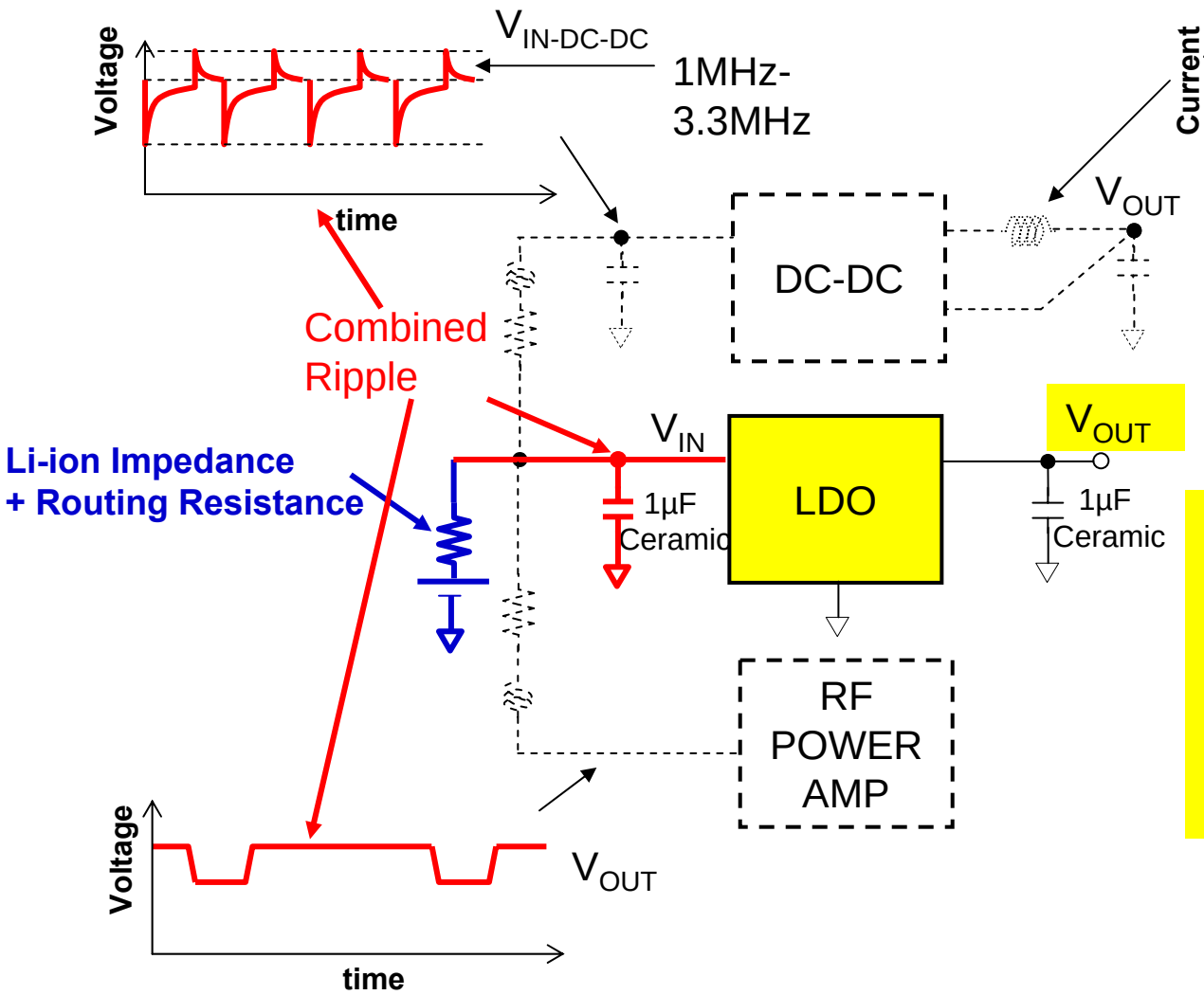

- DC-DC & Power Amp ripple current reflects as voltage ripple at the input of the LDO.
- Used LDOs need to have good ripple rejection at operating frequencies of the buck regulator switching frequencies and the Power Amp ripple frequencies.

Texas Instruments

Ultra Low Noise
Ultra High PSRR RF LDOs

TPS717xx **150mA**
SC70, 1.5x1.5 & 2x2mm SON

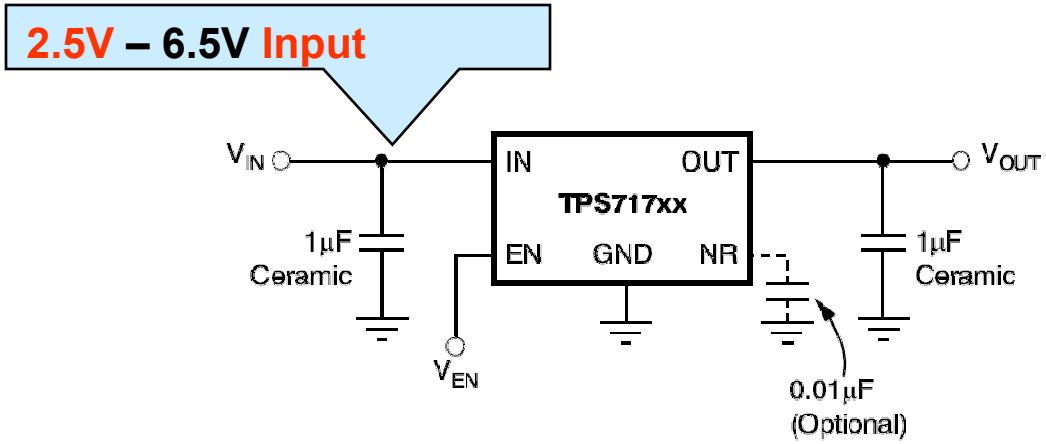

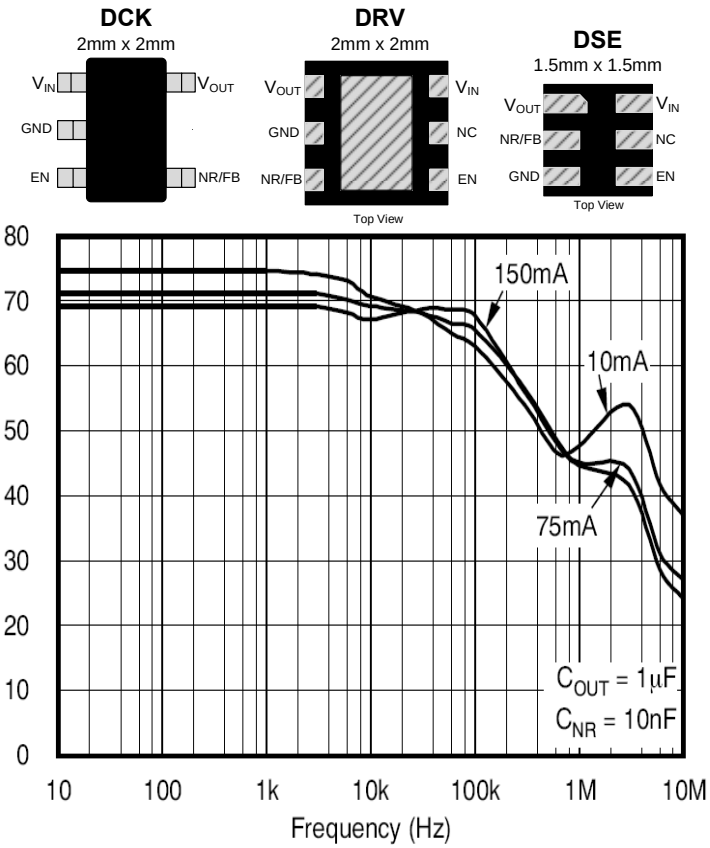

- **Adjustable & Fixed VOUT Versions**
- **30µV Noise (100Hz – 100kHz)**
- **PSRR: >67dB up to 100kHz**
  45dB @ 1MHz

Standby Power with Switch–Over System LDO

TPS51103 System Device with 2 x 100mA Switch-Over LDOs, 1 x 5mA LDO & Clock

Glitch-Free Switch-Over from 3.3V / 5V LDOs to 3.3V / 5V system voltages

Used for driving N-FET Load switches

5V Input (from System)

Wide 4.5 – 28V Input

5V 100mA OUT

250kHz Clock OUT for Charge Pump

Always ON 3.3V / 5mA OUT for RTC

3.3V Input (from System)

3.3V 100mA OUT

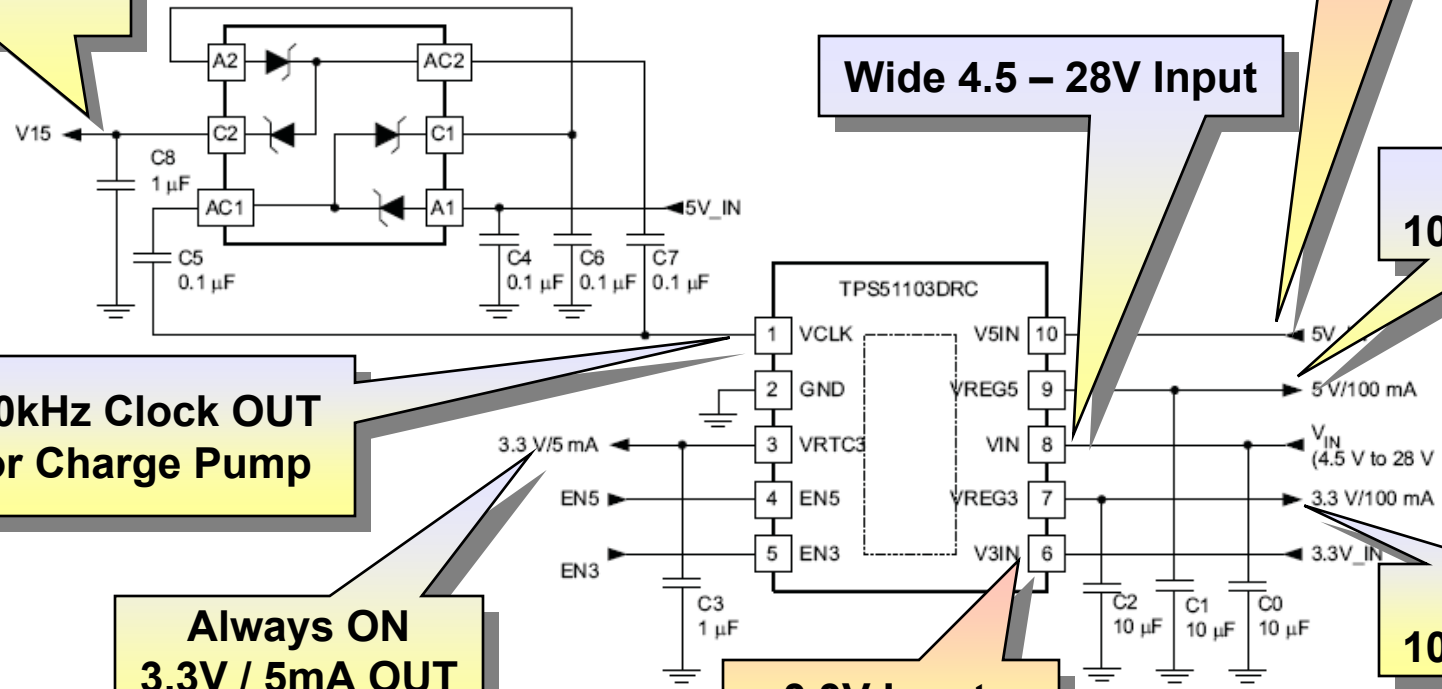

3 x 3mm QFN10

Texas Instruments

Agenda

- General Thoughts
- Linear Regulators
- **Switch Mode Regulators**
- Buck Converter Solutions
- Boost Converter Solutions
- Buck-Boost & Other Converter Solutions
- Power Multiplexing
- Voltage Supervision

Light Load Efficiency

- **Light Load Efficiency: Battery Standby Time**

Continuous Conduction Mode

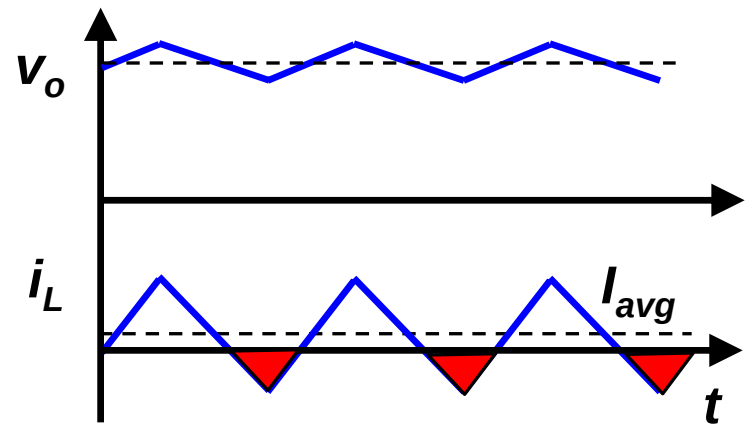

Additional conduction loss associated with this circulating current

- **Good noise immunity**
- **Constant ripple voltage over**
  - **Entire load range**
  - **Line variation**

- **Lower light load efficiency**
  - **High Switching loss is proportional to fs**
  - **High gate drive loss is proportional to fs: PGATE= Vg Qg fs**
  - **High conduction loss: Additional conduction loss associated with circulating current**

Texas Instruments

Light Load Efficiency (Cont.)

Higher light load efficiency

- **Power Save Mode (PFM)**
  - **Discontinuous Conduction Mode (DCM)**
  - **Minimum conduction loss**
  - **Pulse Skipping**
  - **Lower Switching frequency**
  - **Lower switching loss**
  - **Lower gate drive loss**
  - **Lower quiescent current**
- **Higher Vo at light Load, desirable for improved step load transient response**

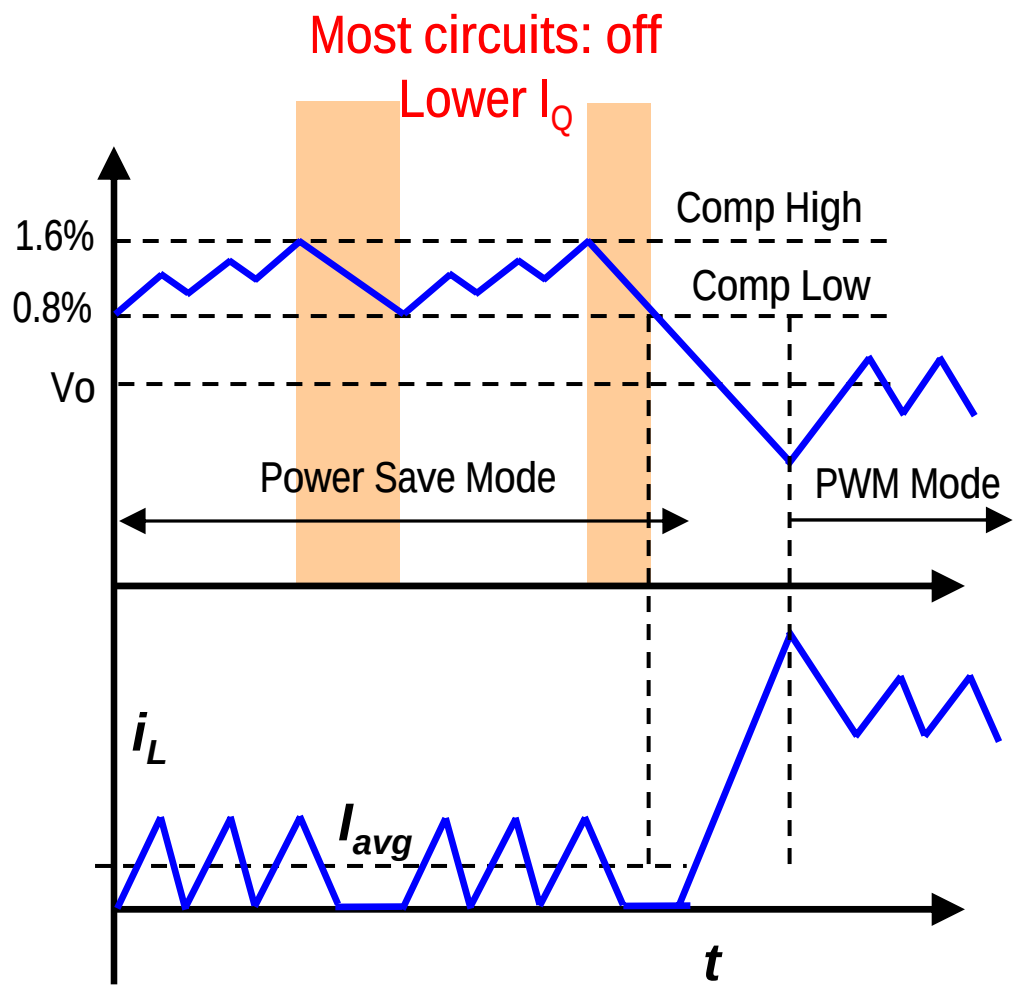

Texas Instruments

Output Voltage Positioning Test Results

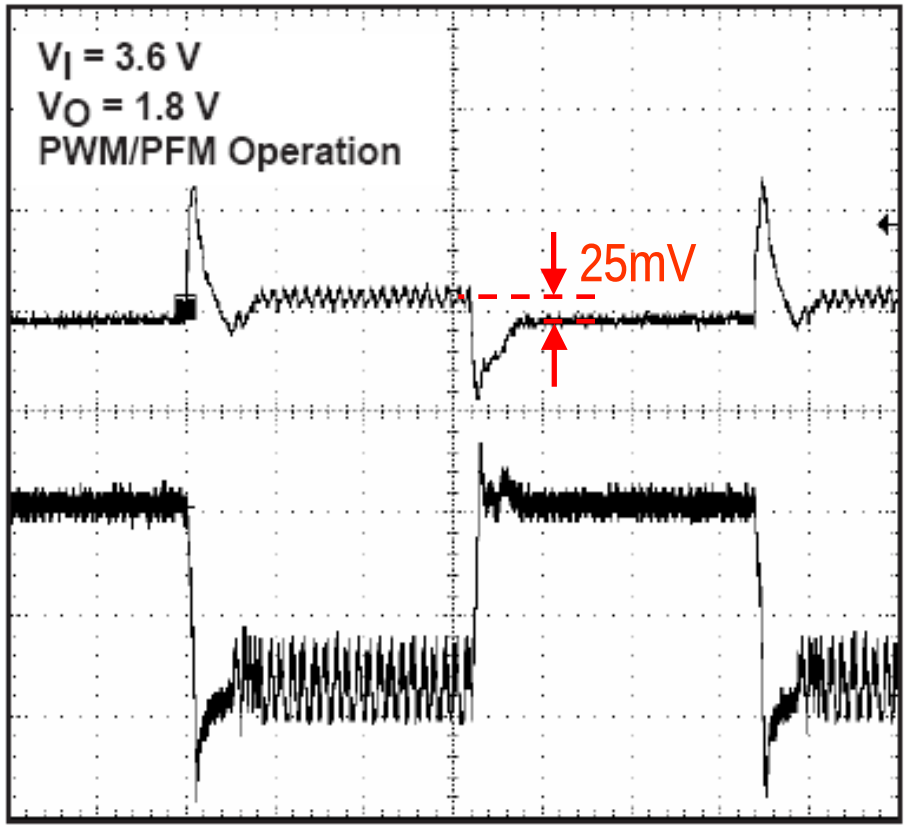

TPS62040

- Voltage positioning: 1.2% output

PFM vs. PWM mode

- 92% at 10mA for PFM
- 50% at 10mA for PWM

- Ultra-Low Iq (some 10s or 100s of µA) and PFM-Mode enable highest efficiency at low or no load current

- PWM ensures constant switching frequency & lowest noise

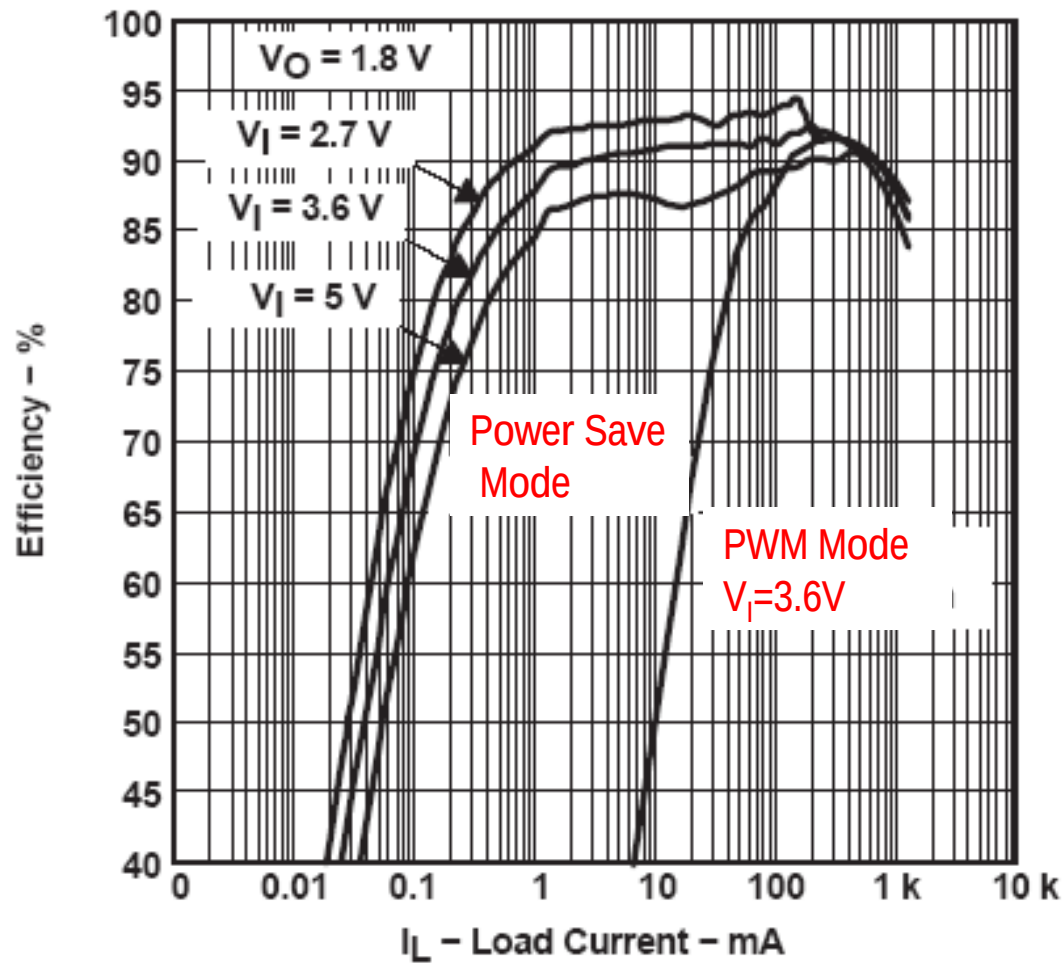

TPS6204x Efficiency curve

Issue from Power Save Mode to PWM Mode

Load transient performance – Heavy Load Step

- Very good in PWM Mode Operation
  - All circuits are fully biased
- Higher voltage drop when transitioning from Power Save Mode (PSM) into PWM Mode
  - Most of the circuits are shut off in Power Save Mode
  - Wake up delay time causes higher voltage drop

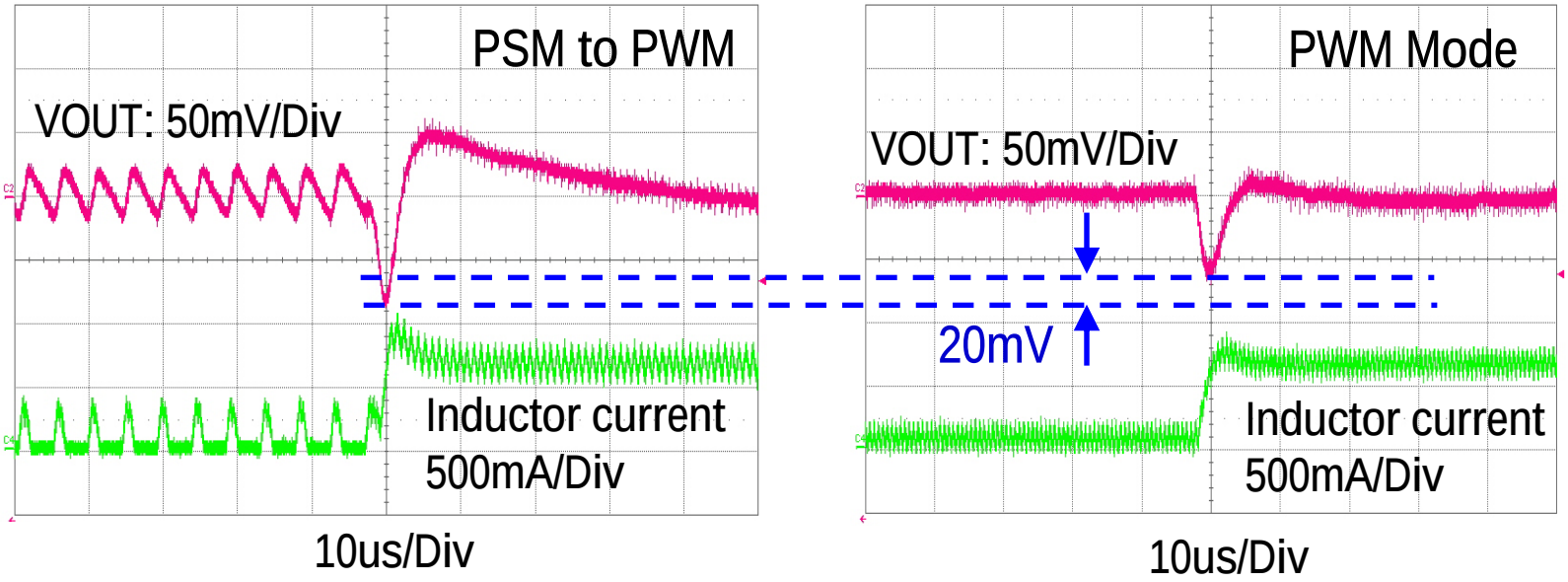

Solution: Output Voltage Positioning

Output Voltage Positioning Implementation

- Power Save Mode: output voltage is raised 1% above the nominal output voltage value
- This covers for the additional voltage drop caused by the load transient when transitioning from Power Save Mode into PWM Mode
- Allow to use smaller capacitance and larger ESR compared with the case without voltage positioning

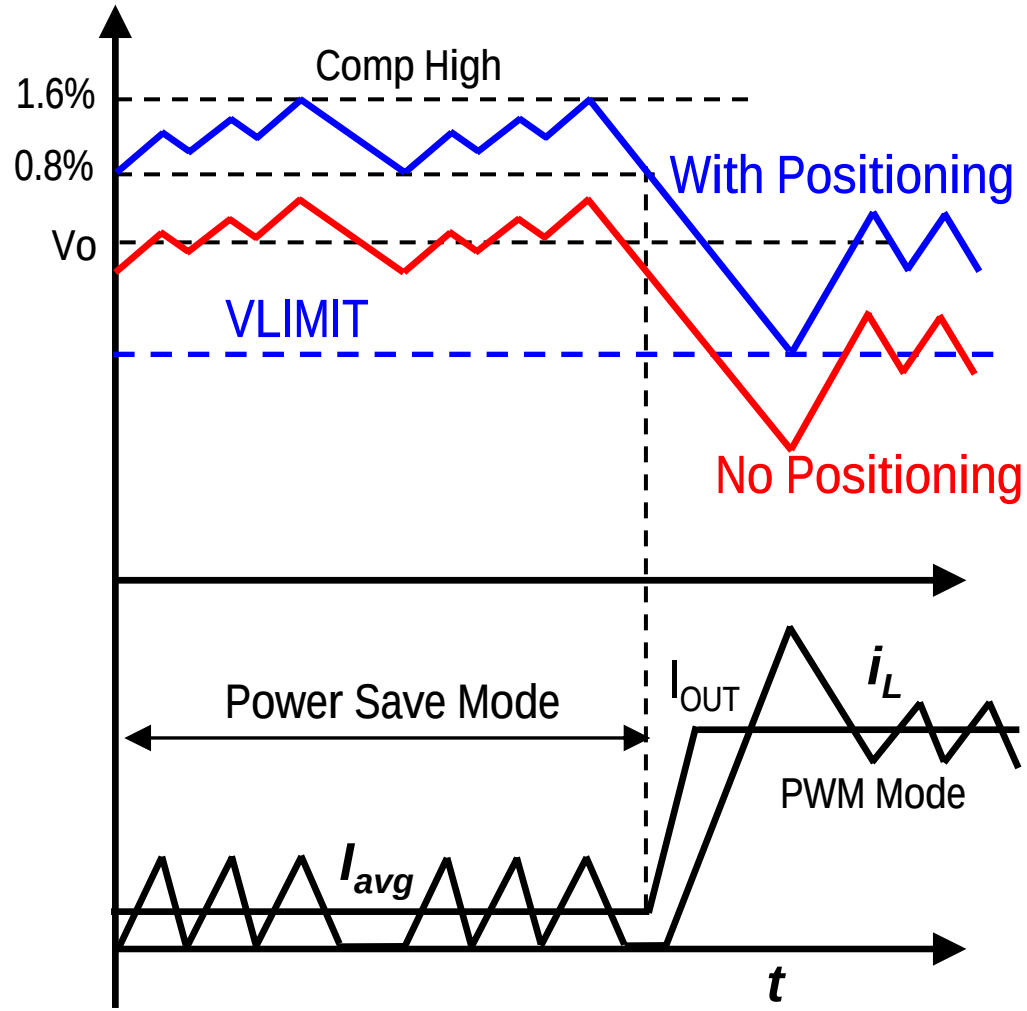

Texas Instruments

Soft-Start Issues

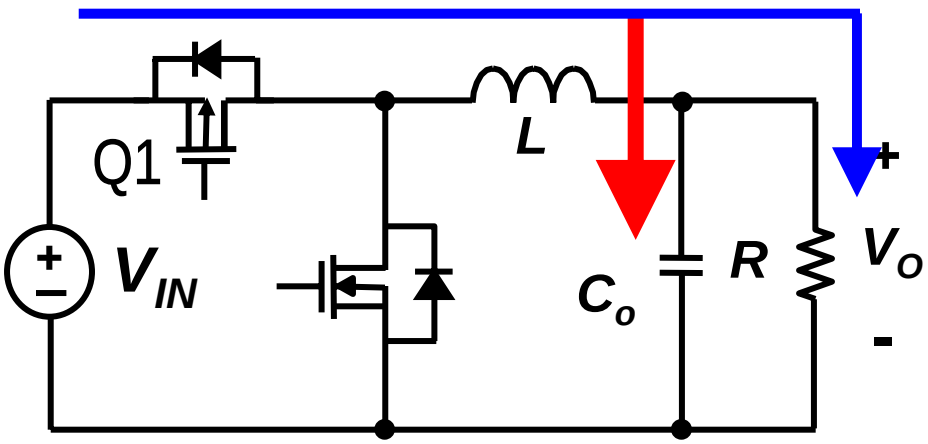

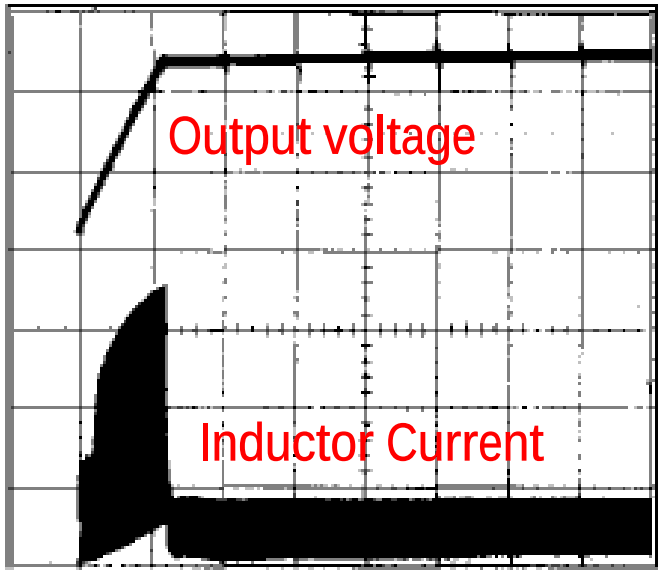

- **High inrush current:** $i_c = C_o \dfrac{dV_o}{dt}$
  - **Could be as high as 4 times load current**
  - **Inductor saturation**
  - **Power source over current protection (OCP)**
  - **Early battery termination. V_{BAT}= OCV – I R_{BAT}**

Texas Instruments

Soft-Start: Peak Current Limiting

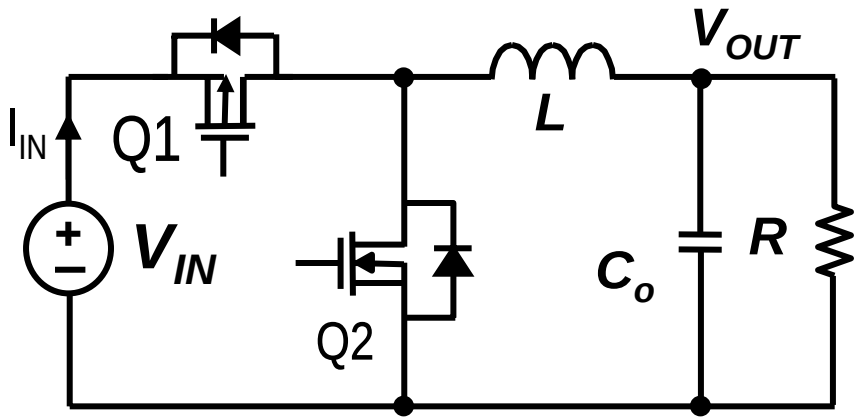

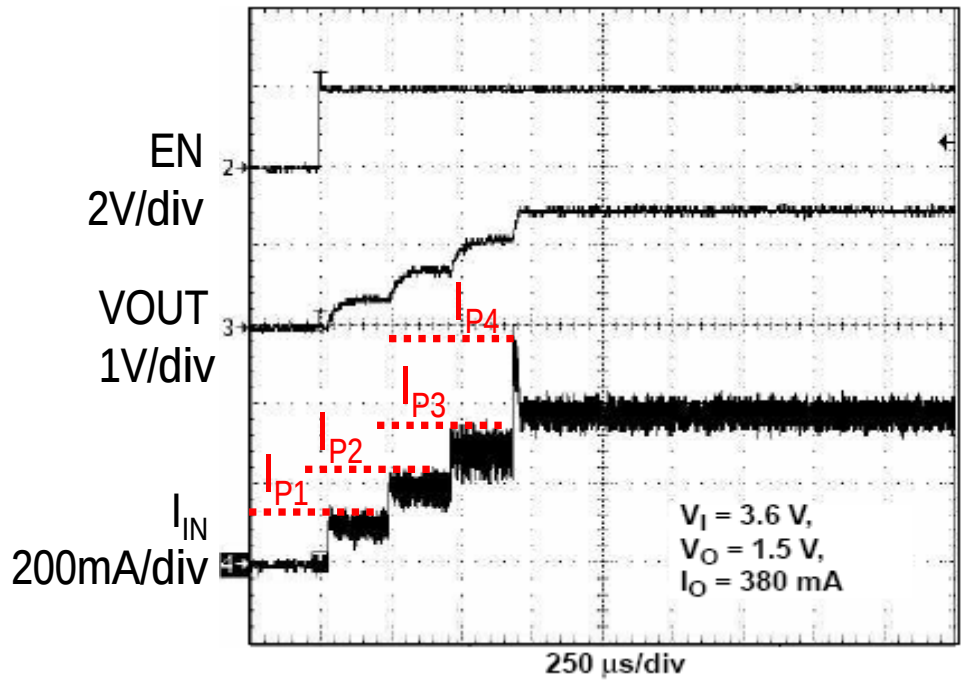

TPS6222x Soft-start waveforms

- **Operation Principle**
  - **Q1 ON until it reaches peak current limit**
  - **Q1 OFF and Q2 ON until next clock cycle**
- **Peak current regulation during soft-start.**
- **Soft-start time is determined by the output capacitance and load current**
- **Save an external soft-start capacitor and save one pin in PWM controller IC**
- **Output voltage regulation once the output reaches the regulation point**

Agenda

- General Thoughts
- Linear Regulators
- Switch Mode Regulators
- **Buck Converter Solutions**
- Boost Converter Solutions
- Buck-Boost & Other Converter Solutions
- Power Multiplexing
- Voltage Supervision

Steady-State Analysis - BUCK

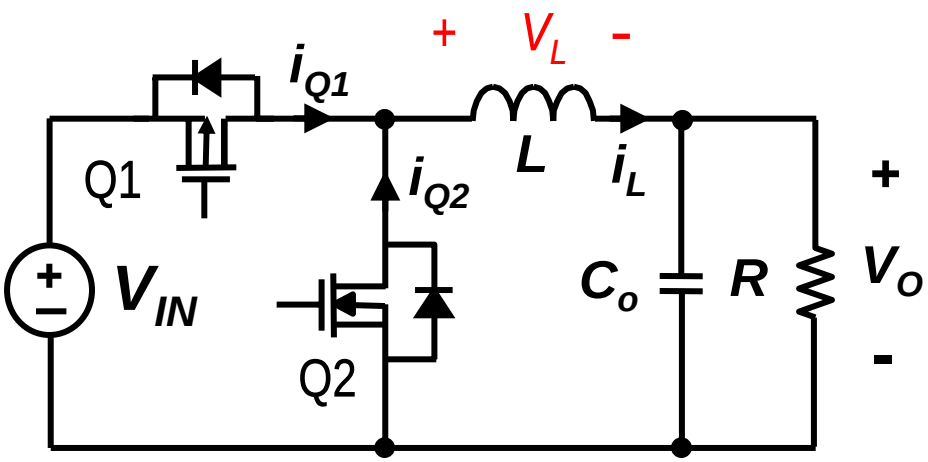

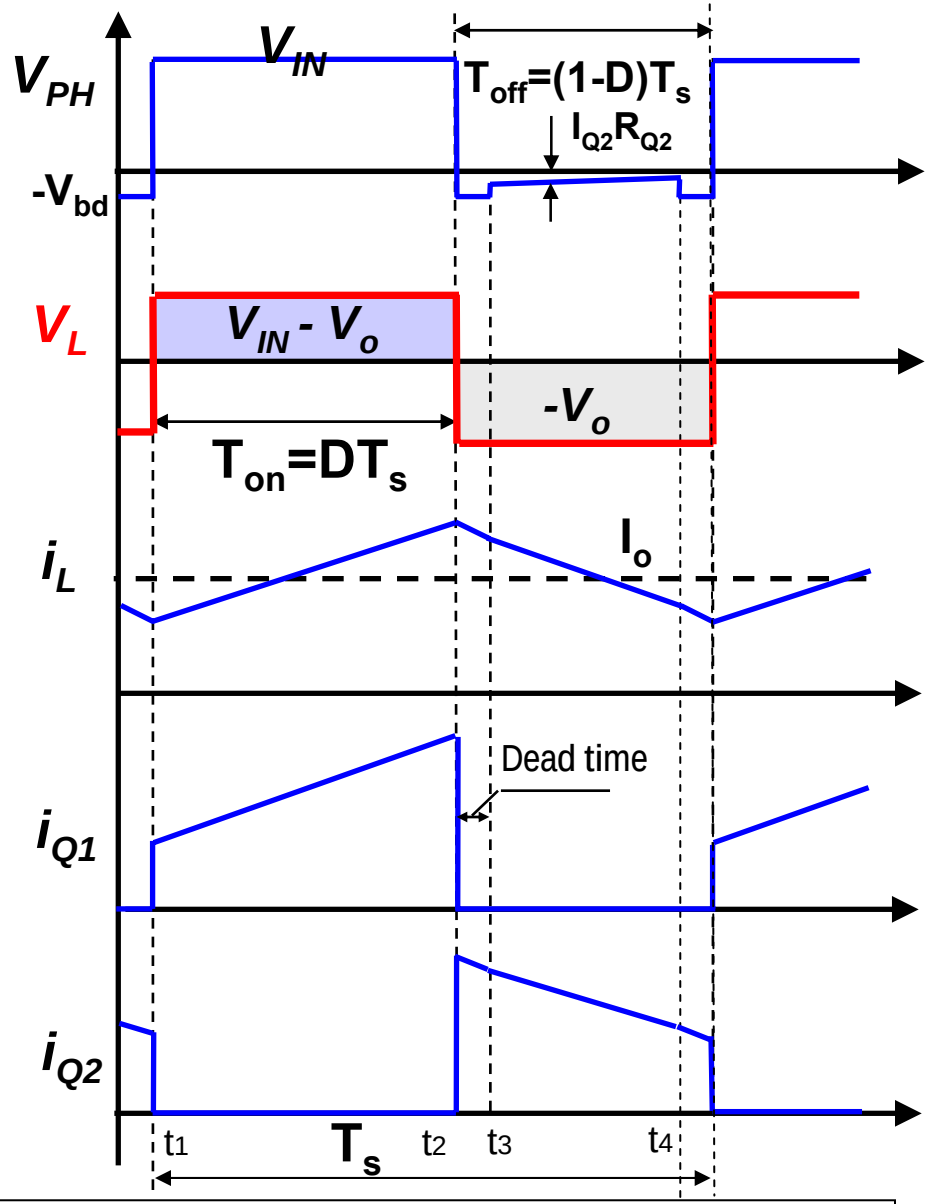

Volt-Second balance across L

$$(V_{IN} - V_o) \cdot DT_s = V_o(1-D)T_s$$

$$\frac{V_o}{V_{IN}} = D$$

Texas Instruments

Basic Buck Issues

- High Side Drive for Main Switch
- Max Dutycycle Limitations
  - P-FET allow 100%
  - N-FET needs Bootstrap and special implementation to allow near 100%
- Minimum ON-Time Limitations
- Pulsating Input Current

The Need for Increased Duty Cycle

$$D = \frac{V_O + I_O\left(R_{Q2} + R_L\right)}{V_{IN} + I_O\left(R_{Q2} - R_{Q1}\right)}$$

$V_{OMAX} = V_{IN} - I_O\,(R_L + R_{Q1})$ *with 100% Duty Cycle*

Battery Applications:

$V_{IN} = OCV - I_{IN\,(DC/DC)} \times R_{BAT}$

OCV: Battery open circuit voltage

Texas Instruments

Smallest and Most Flexible Low VIN 3MHz Buck Converters

TPS62350 800mA; 3MHz; *I²C Programmable*

2.7 … 5.5V Input
Only 28µA Iq

Ultra-Small 1uH Inductor

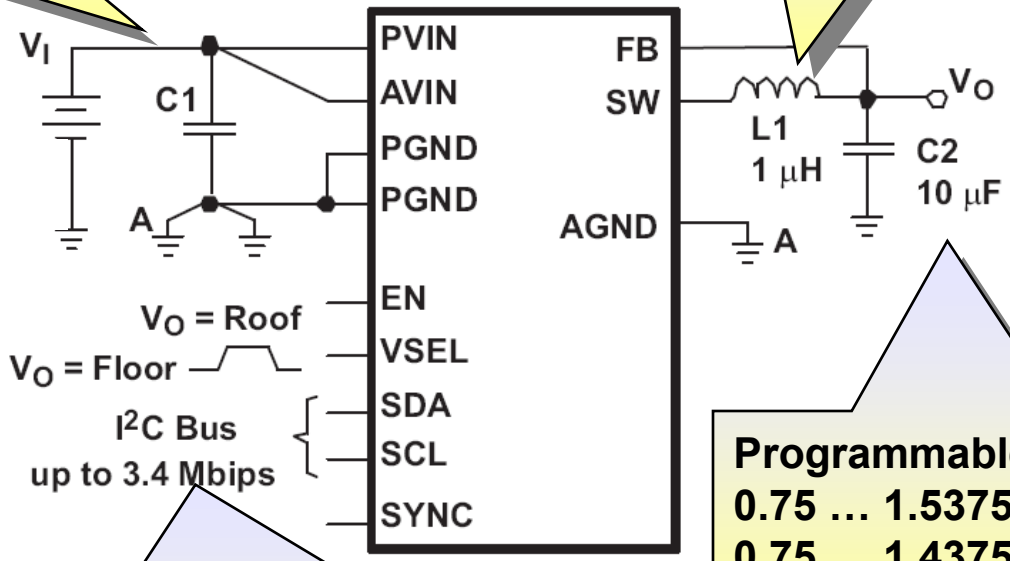

QFN-10 3 x 3 mm²

CSP-12 2.2 x 1.4 mm²

Programmable Output
0.75 … 1.5375 V (TPS62350 / 53 … 55)
0.75 … 1.4375 V (TPS62352)
0.9 … 1.6875 V (TPS62351)
1.5 … 1.975 V (TPS62356)

I2C Compatible Interface:
- **Dynamic Voltage Scaling / Slew Rate**
- **Mode of Operation**
- **Enable / Disable / Output Discharge**
- **PowerGood**

Smallest Solution 500mA / >3MHz Converter

TPS6223x up to 500mA; up to >3MHz; 1x1.5 SON6

Fixed Voltage Output
1.0 … 3.0V
1.2 / 1.8 / 2.5V Versions released
other on request

2.05 … 6V Input

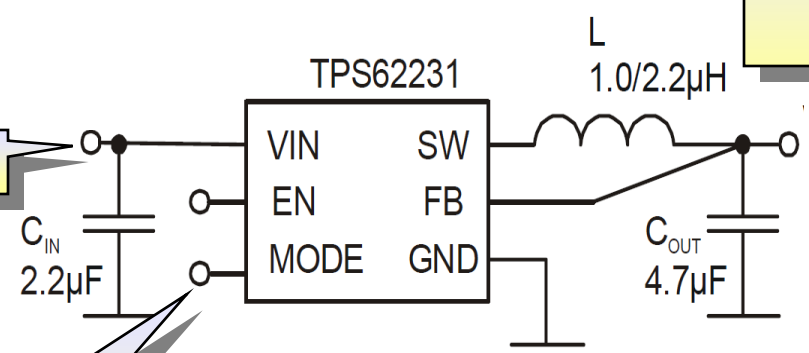

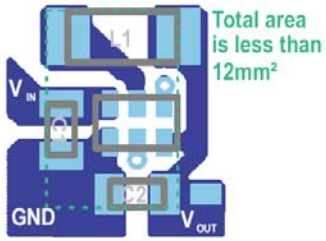

Mode Select

- Supports 0.6mm Height Applications
- 22µA Quiescent Current
- Forced PWM and Auto Power Save Mode

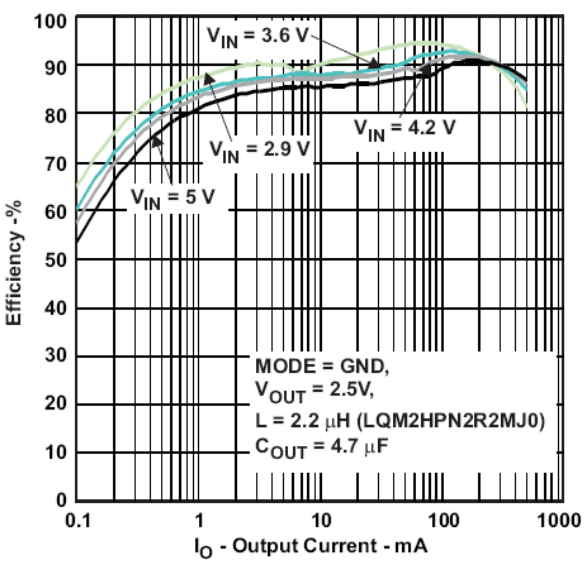

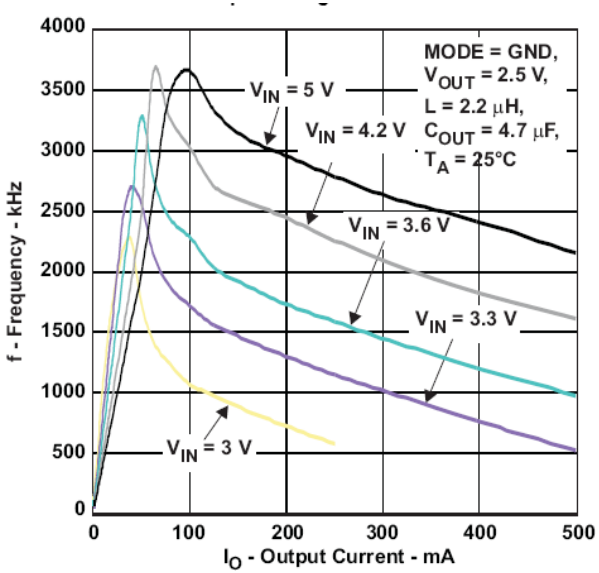

Texas Instruments

Dual Low VIN Buck Converters

TPS62400 400/600mA; 2.25MHz; 3 x 3 QFN
TPS62410 800/800mA; 2.25MHz; 3 x 3 QFN
TPS62420 600/1000mA; 2.25MHz; 3 x 3 QFN

2.5 … 6V Input

Separate ENABLE for OUT1 / OUT2

- **Selection for Automatic PWM / PFM (Low) or Forced PWM (High)**
- **EasyScale™ One Pin I/F**

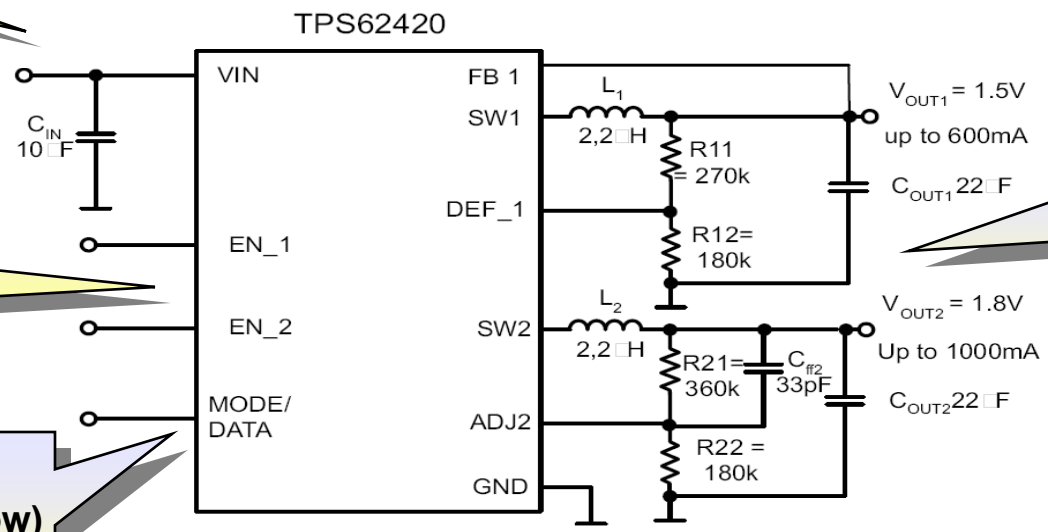

Adjustable Outputs 0.6V … VIN

EasyScale™ Optional One Pin Serial Interface for Dynamic Output Voltage Adjustment

17VIN / 1.5A
ECO-Mode™ Buck Converter

TPS62110 1.5A; 1MHz; Adj. 1.2 … 16V; QFN16
TPS62111 1.5A; 1MHz; 3.3V Output; QFN16
TPS62112 1.5A; 1MHz; 5V Output; QFN16
TPS62113 1.5A; 1MHz; Adj. 1.2 … 16V; Enhanced LBI / LBO function (UVLO); QFN16

3.1 – 17V Input

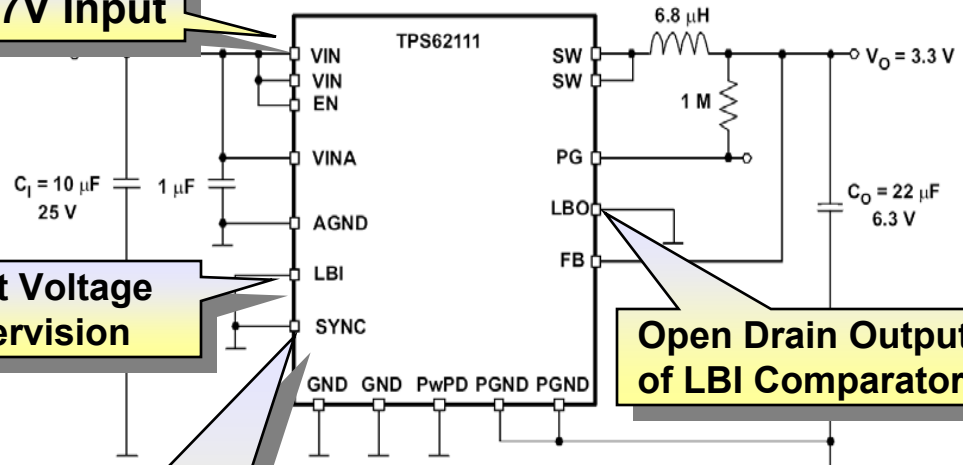

Input Voltage Supervision

Open Drain Output of LBI Comparator

- **Synchronization**
- **Selection for Automatic PWM / PFM or Forced PWM**

- 20µA Quiescent Current
- 2µA in Shutdown
- 100% Max Dutycycle

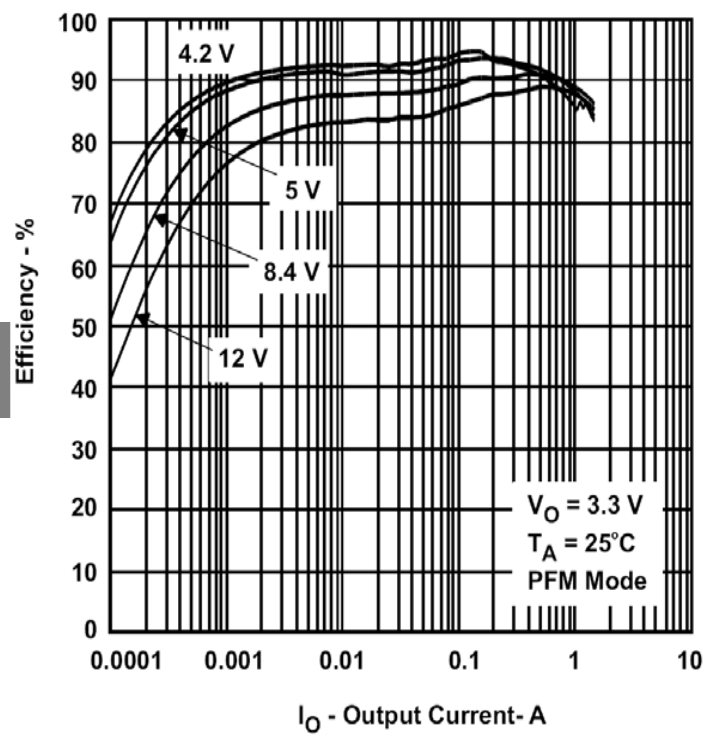

Texas Instruments

14VIN / 10A ECO-Mode™ Buck Converter

TPS51315 10A / D-CAP™ and ECO-Mode™ Buck Converter

Adjustable OCP

Integrated bootstrap diode

Enable & Skip-mode control

5 V Bias Power

Adjustable frequency (100kHz to 1MHz)

Adjustable VOUT (0.75V to 5.5V)

Prebias startup & selectable VOUTdischarge

Powergood

Integrated 19 / 7 mΩ FETs w/ 10A continuous capability, optimized for low dutycycles

3 – 14V Power Path Input

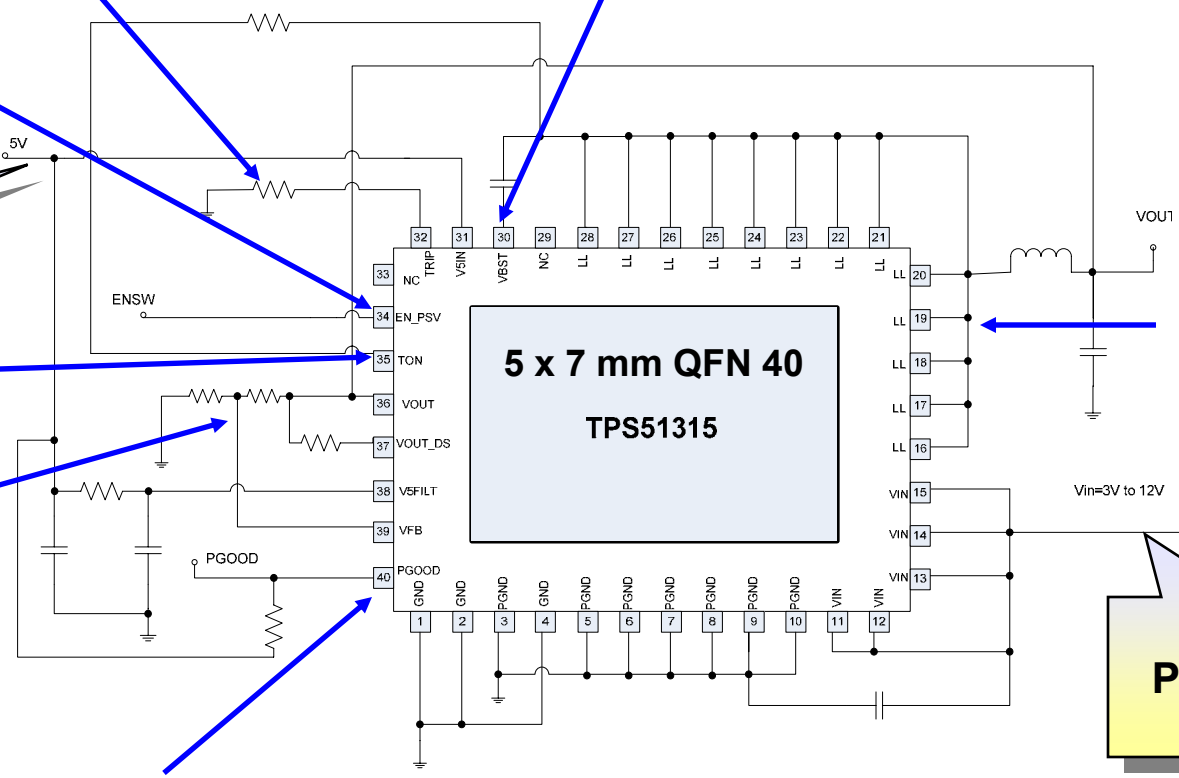

Texas Instruments

14VIN / 10A
ECO-ModeTM Buck Converter

Efficiency Gain at Light Load

Performance Data of TPS51315 Solution

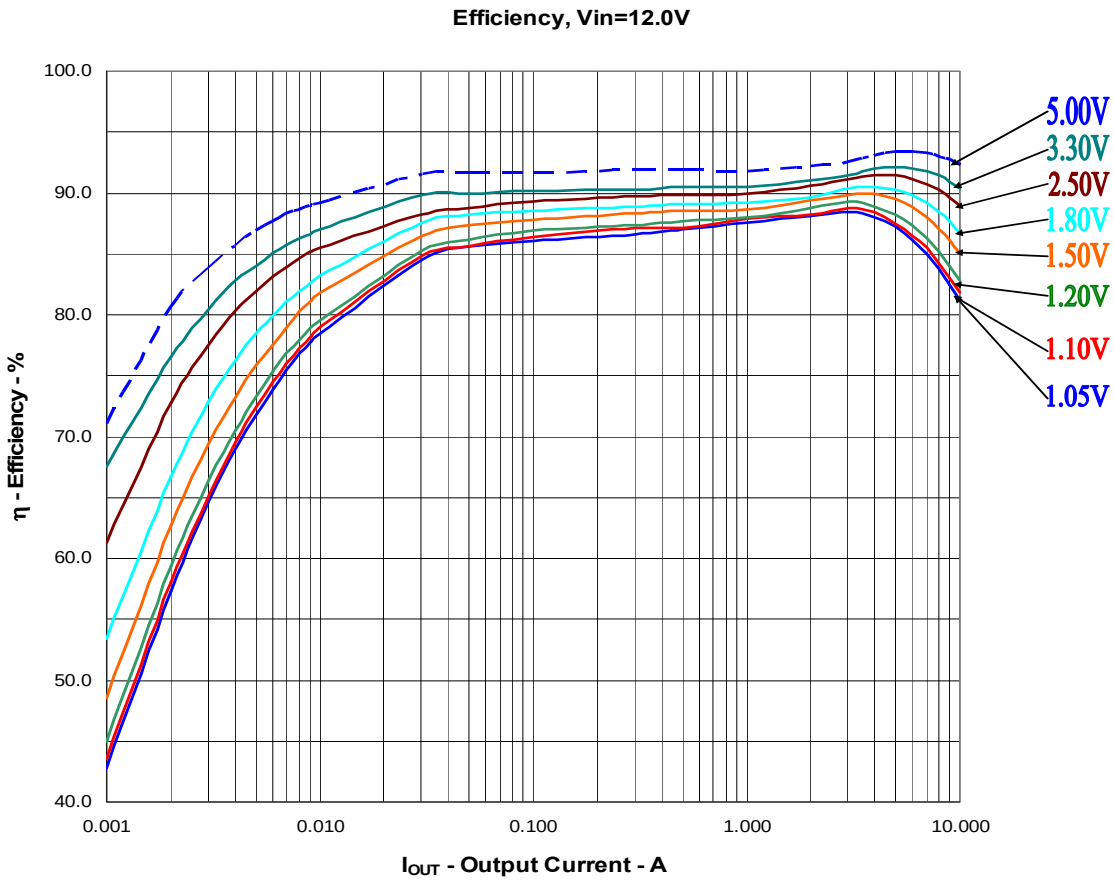

L_{out}=1.0uH (DCR: 5.6mohm)
C_{out}=2X330uF (ESR:12mohm/2)
Fsw=300Khz

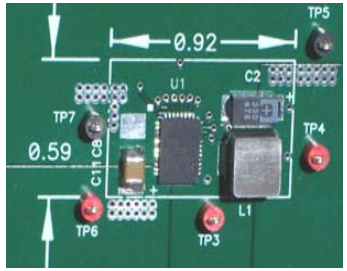

Thermal Picture

(12Vin / 1.05Vout @ 10A)

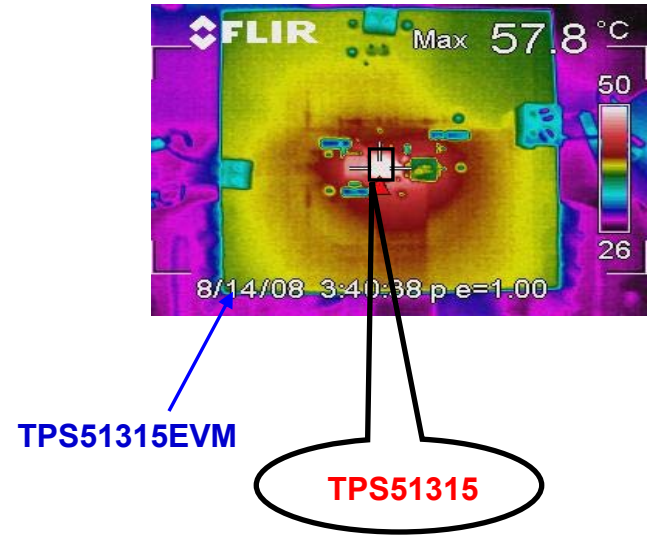

Texas Instruments

Smallest 17V / 6A Buck Converter

TPS54620 1.6 – 17VIN, 6A Current Mode SWIFT

1.6 – 17V Power Path Input

4.5 – 17V BIAS Input

Enable or Programmable UVLO w/ Hysteresis

PowerGood (OV & UV)

Programmable Softstart / Voltage Tracking Input

200 – 1600kHz Programmable Switching Frequency / Synchronization Input

Compensation (enables all ceramic caps designs)

3.5x3.5 QFN-14

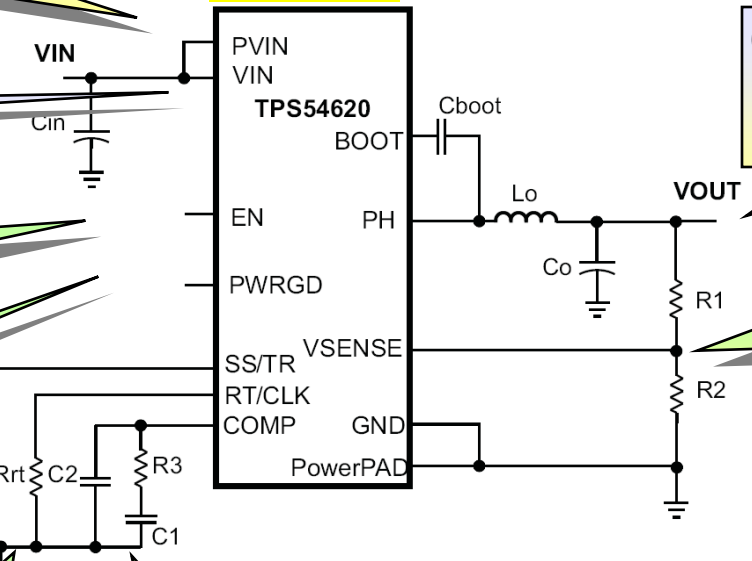

Output down to 0.8V (Theoretically up to 100%VIN)

800mV VFB (1% over Temp.)

- Integrated 26 / 19mΩ FETs optimized for low dutycycle
- Pre-Bias Compatible
- Specified up to +150ºC !!!
- Single PowerPAD only!!!

Texas Instruments

Smallest 17V / 6A Buck Converter

TPS54620 1.6 – 17VIN, 6A Current Mode SWIFT

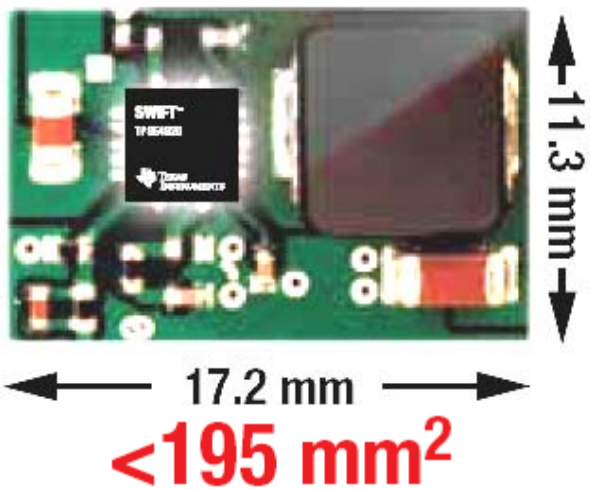

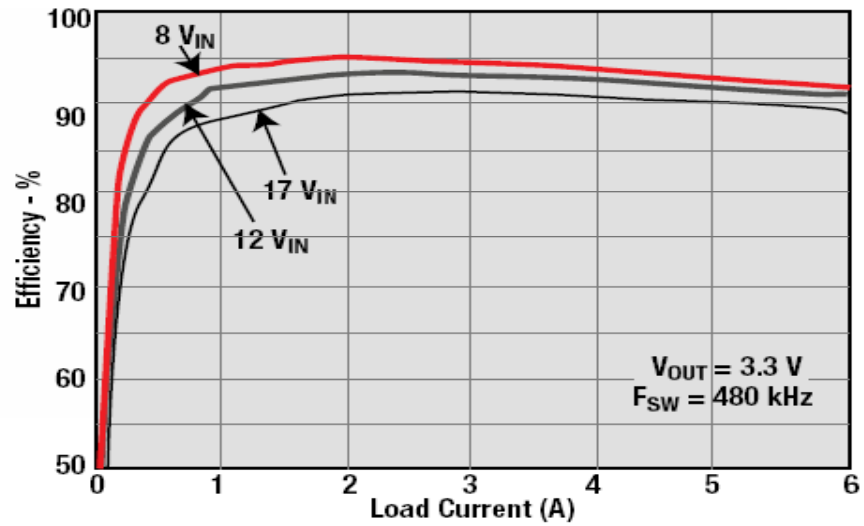

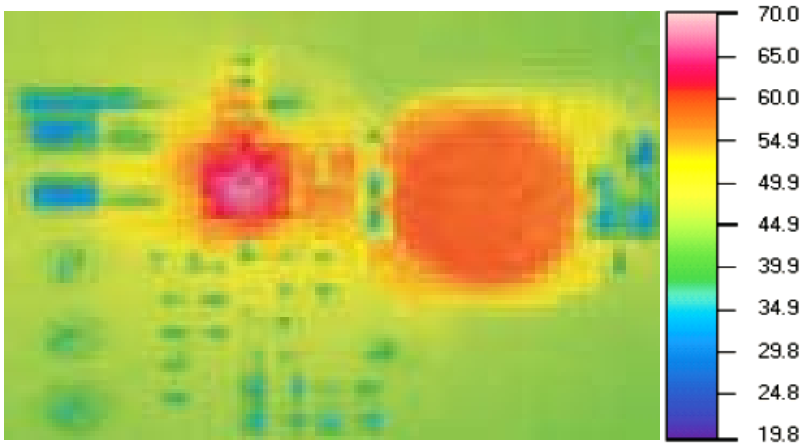

High Efficiency and max. recommended T_J of 150ºC enable industrie's smallest 6A converter design

3.5 – 42V / 60V Wide VIN
0.5A / 1.5A ECO-Mode™ SWIFT Converter

TPS54160	3.5 – 60VIN	1.5A; 300kHz – 2.5MHz
TPS54140	3.5 – 42VIN	
TPS54060	3.5 – 60VIN	0.5A; 100kHz – 2.5MHz
TPS54040	3.5 – 42VIN	

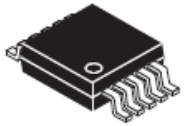

MSOP10
PowerPAD

3.5 – 42 VIN TPS54x40
3.5 – 60 VIN TPS54x60

- Integrated **200 mΩ** High Side MOSFET
- Supports **Dutycycle Near 100%**
- Pulse Skipping **ECO-Mode™** with **116uA Operating** and **1.3uA Shutdown** Current
- **Synchronizable** to External Clock
- **Overvoltage Transient Protection**
- **PG**, Enable, and Track Pin
- **Adjustable UVLO + Hystersis**
- T_J – 40 … **+150ºC** for harsh environment
- Adjustable Slow Start Time

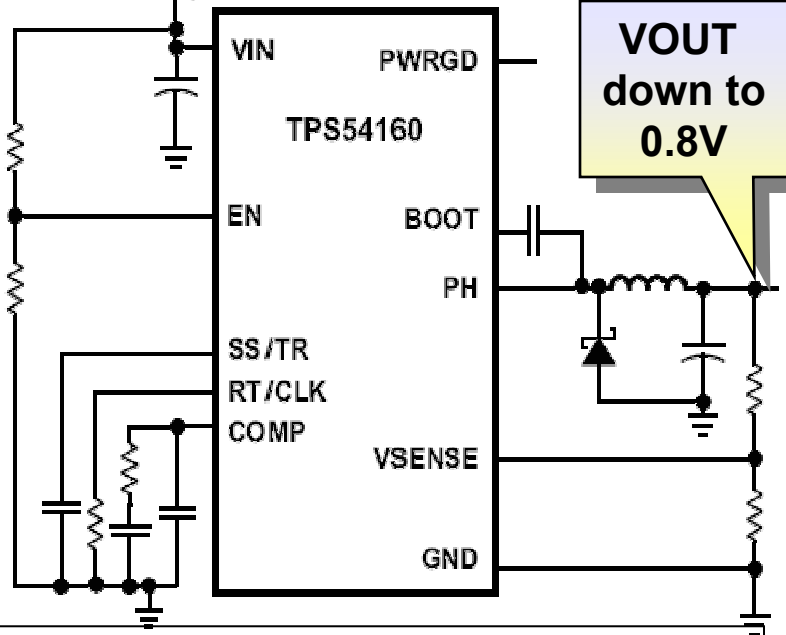

VOUT down to 0.8V

Texas Instruments

Low Cost Inductive Buck Controller for 1.8V – 6.5V Operation

TPS64200	**1.6µs t_{on} ;**	**600ns t_{off}**
TPS64201	**1.6µs – 200ns t_{on} ;**	**600ns t_{off}**
TPS64202	**1.6µs – 200ns t_{on} ;**	**300ns t_{off}**
TPS64203	**600ns t_{on};**	**600ns t_{off}**

- **Minimum ON-time / minimum OFF-time controller**
- **Inherent stable**
- 100% maximum duty cycle
- Current limit based on sense resistor or R_{DSON}
- Internal Soft Start
- **Tiny SOT23 Package**

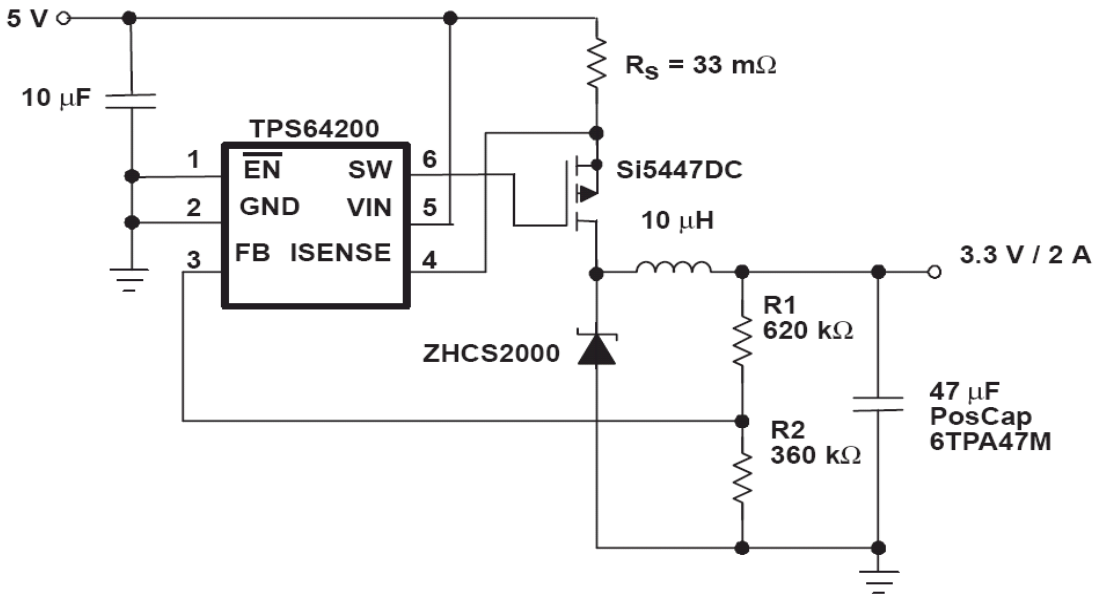

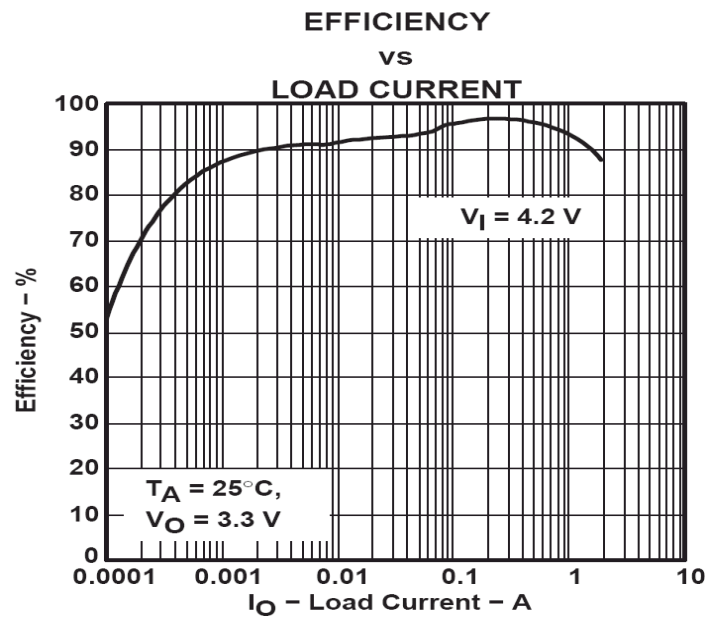

Dual Buck + 300mA LDO for Powering µControllers, DSPs, FPGAs and ASICs

TPS75003

- 2 x TPS6420x
  for up to 3A **Output current**
- 1 x 300mA **LDO**
- **1.22V – 6.5V Output (Buck)**
- **1V – 6.5V Output (LDO)**
- **Dedicated Softstart for Each Channel**

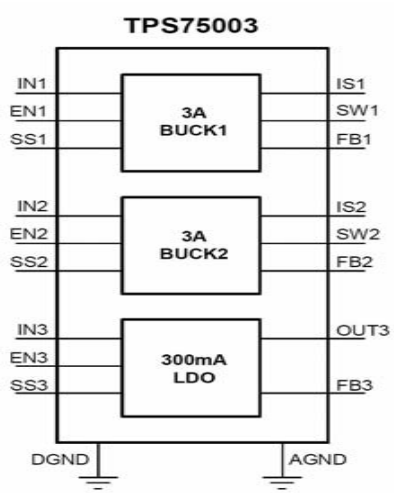

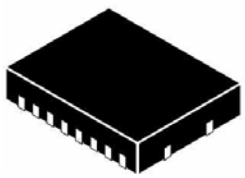

4.5 x 3.5mm² QFN

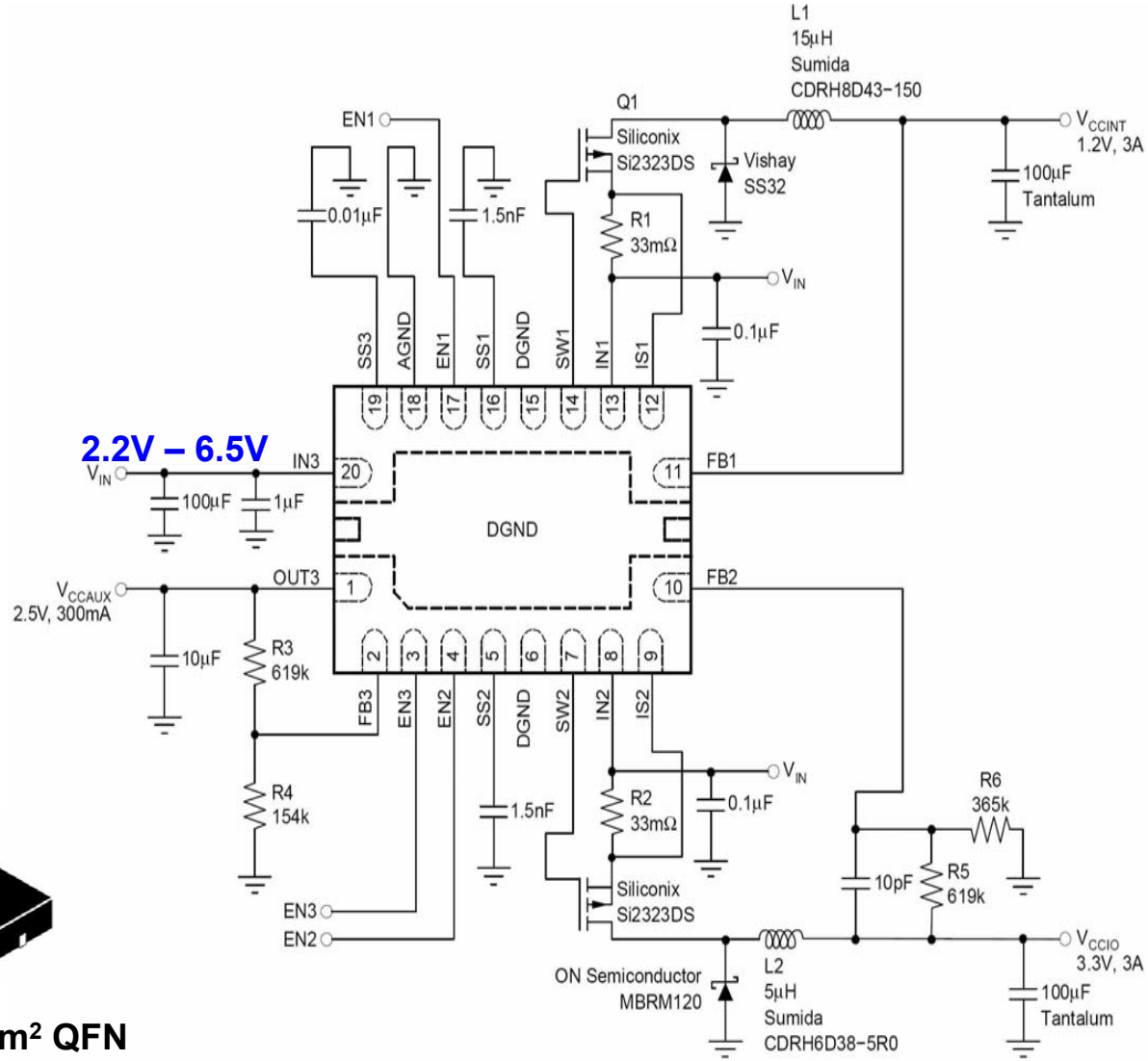

Texas Instruments

The Nex Generation of Power Savings

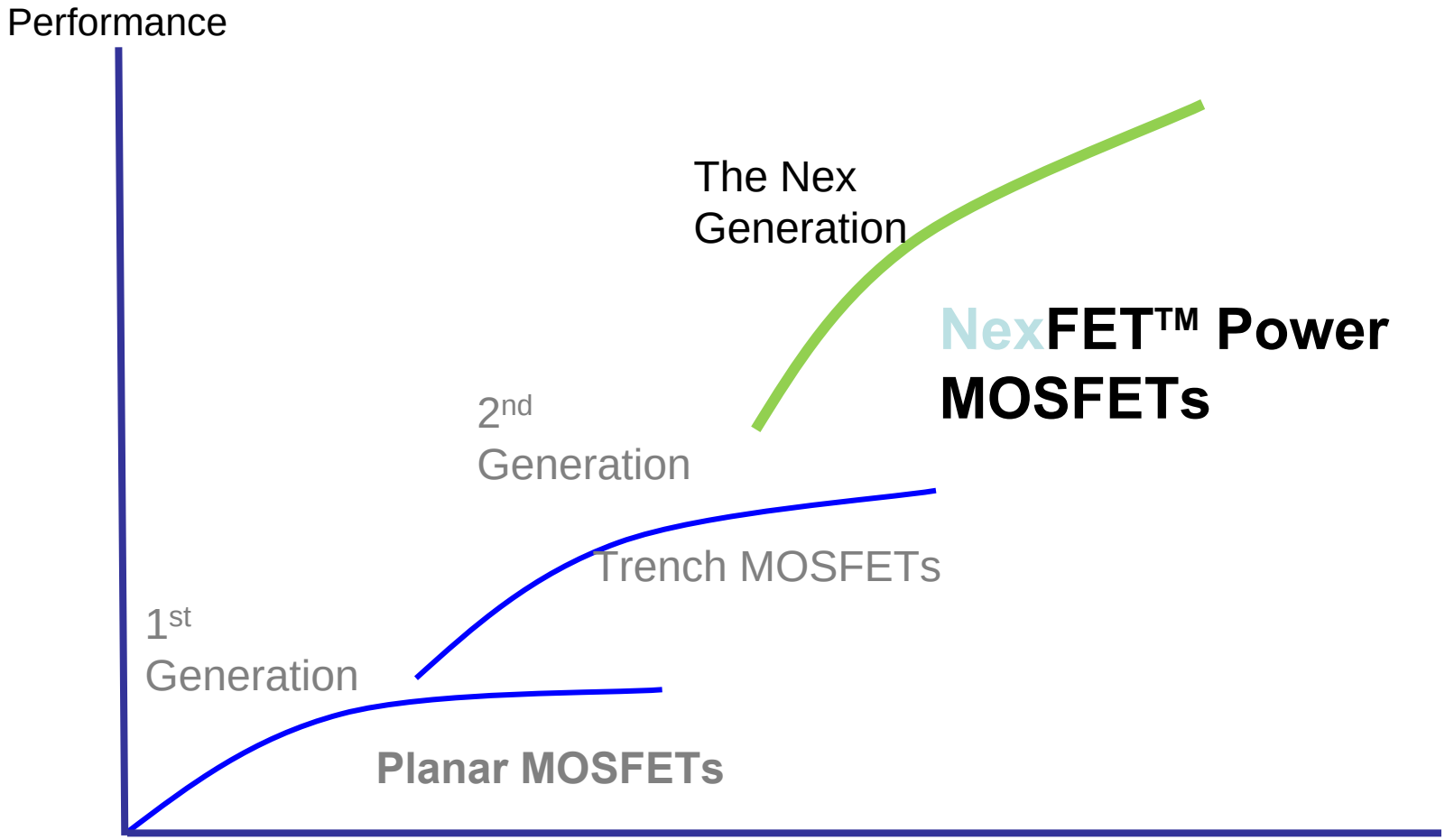

NexFET™ High-Efficiency MOSFETs

www.ti.com/mosfet

Industry's best FOM (Rds(ON)*Qg & Rds(ON)*Qgd)
Lowest losses even @ high frequency

Part Number	Datasheet	Channel	V_{ds}	V_{gs}	Typical $R_{ds(on)}$ (mΩ) @ 10V	@ 4.5V	@ 2.5V	@ 1.8V	@ 1.5V	Typical Q_g @ 4.5V (nC)	Typical Q_{gd} (nC)	Samples
QFN 3x3												
Single												
CSD16411Q3		N	25	16	8	12				2.9	0.7	Order
CSD16409Q3		N	25	16	6.2	9.5				4.0	1.0	Order
CSD16406Q3		N	25	16	4.2	5.9				5.8	1.5	Order
Single												
CSD25401Q3		P	20	12		8.7	13.5			8.8	2.1	Order
QFN 5x6												
Single												
CSD16412Q5A		N	25	16	9.0	13.0				2.8	0.7	Order
CSD16410Q5A		N	25	16	6.8	9.6				3.9	1.1	Order
CSD16404Q5A		N	25	16	4.1	5.7				6.5	1.7	Order
CSD16413Q5A		N	25	16	3.1	4.1				9.0	2.5	Order
CSD16403Q5A		N	25	16	2.2	2.9				13.3	3.5	Order
CSD16407Q5		N	25	16	1.8	2.5				13.3	3.5	Order
CSD16414Q5		N	25	16	1.5	2.1				16.6	4.4	Order
CSD16401Q5		N	25	16	1.3	1.8				21.0	5.2	Order

Industry's best FOM
Lowest losses even @ high frequency

NexFET™ Highlights

- Low Rds(ON)
  - **Ensures low conduction losses**
- Flat Rds(ON) vs Vgs curve
  - **Enables lowest driver losses by using low gate drive voltage**
- Lowest Qg & Qgd
  - **Enables fastest switching and lowest switching & driver losses**
- Low Qgd/Qgs
  - **Avoids dV/dt based shoot through**

Double Freq – Same Performance

Efficency @ V_{IN} = 12V, V_O = 1.3V, L_O = 0.3µH, T_A = 25°C

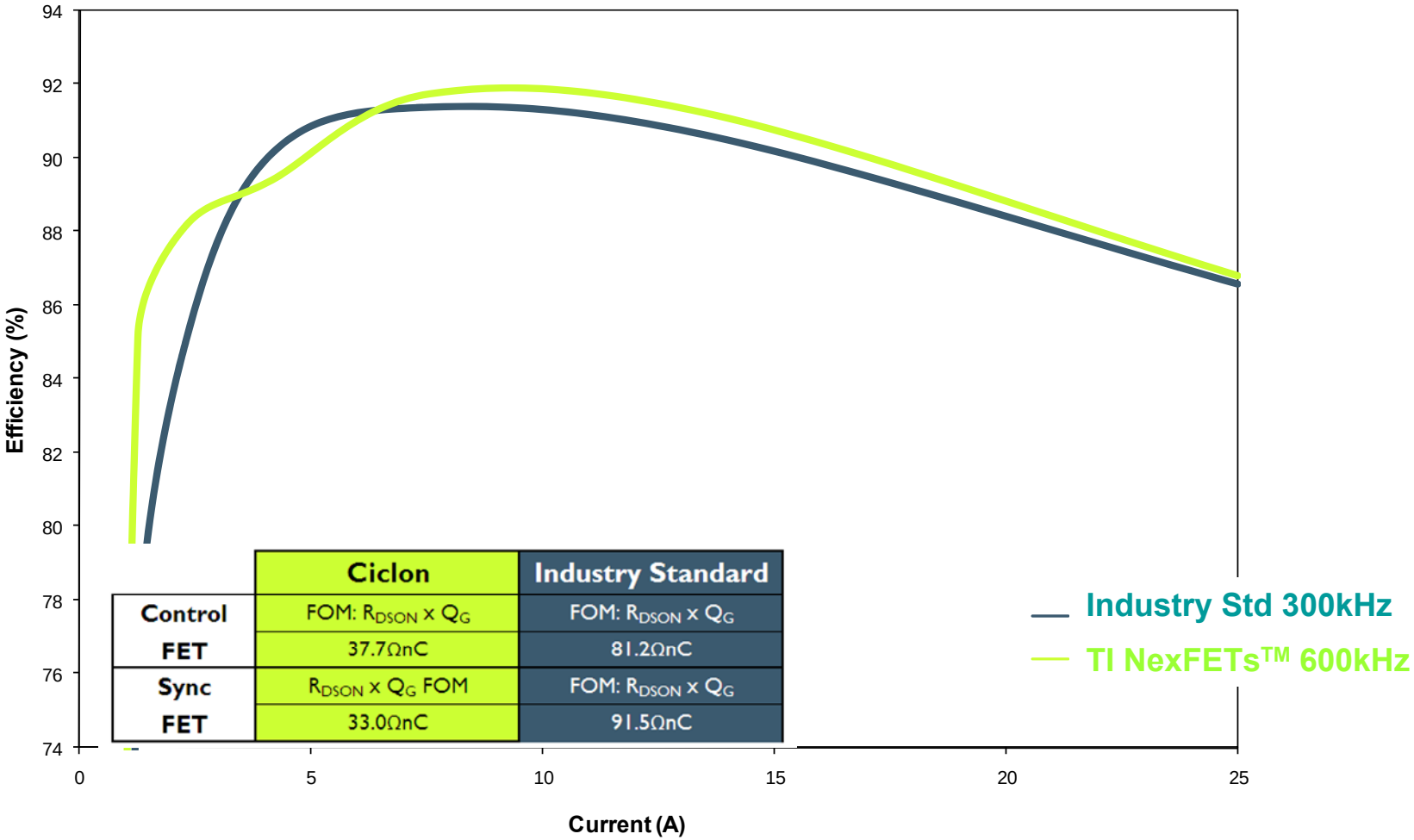

	Ciclon	Industry Standard
Control FET	FOM: $R_{DSON} \times Q_G$ 37.7ΩnC	FOM: $R_{DSON} \times Q_G$ 81.2ΩnC
Sync FET	$R_{DSON} \times Q_G$ FOM 33.0ΩnC	FOM: $R_{DSON} \times Q_G$ 91.5ΩnC

Efficiency Delivering Cooler Systems

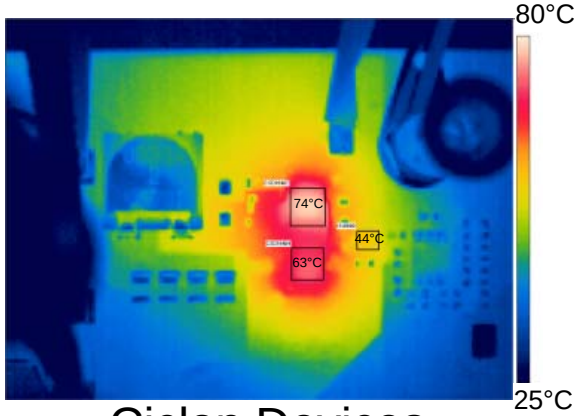

Ciclon Devices

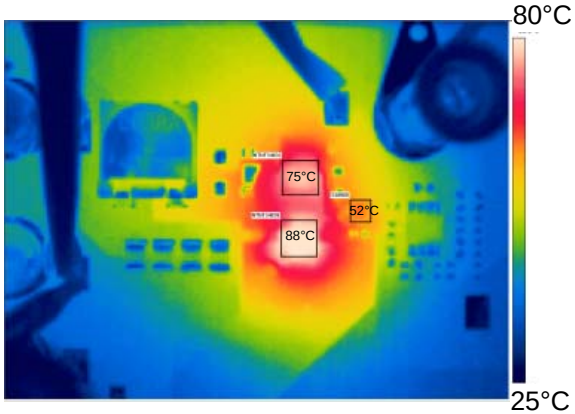

Industry Standard Devices

- Up to 30% cooler operation of MOSFET
- Up to 15% cooler driver operation
- Increased Reliability

Core Power Solution – INTEL IMVP6+

INTEL IMVP6+ CNDA# required for detailed information

TPS51610 — Single Phase D-Cap+™ Buck Controller with ECO-Mode™ for IMVP6+ CPU and Graphics Cores

for up to 20A

- Industrie's **lowest external parts count**
- **Full IMVP6+ Compliance**, Including VRTT and POUT Monitor
- Dual Mode **5-Bit (Graphics)** and **7-Bit (CPU) VID - DAC**
- 0.3-V to 1.5-V VOUT, **±8 mV Accuracy Over Line/Load/Temp**
- **Optimized Efficiency at Light and Heavy Loads**
- **Patented Output Overshoot Reduction** (OSR™) **Reduces Expensive Output Caps**
- **Selectable 200 / 300 / 400 / 500 kHz** Frequency
- **3-V to 28-V** Conversion Voltage Range
- **Fast FET Driver w/ Integrated Boost Diode**
- Small **5 × 5mm, QFN-32**

TPS51620 — Dual Phase D-Cap+™ Buck Controller with ECO-Mode™ for IMVP6+ CPU Cores

for more than 20A

- Similar As TPS51610 but with the following additional features / differences:
- **7-Bit (CPU) VIDs** only
- **Pat. Pending AutoBalance™ Phase Balancing**
- **6 × 6mm, QFN-40**

General Purpose VID Power Solution

TPS51727
for more than 20A

Full Featured General Purpose Dual Phase ECO-Mode™ D-Cap+™ Buck Controller with 5-Bit VID

4.5 – 5.25 V BIAS Power Input

Integrated Bootstrap Diodes

Features are similar as TPS51620 features

True Differential Inductor **Current Sense** Inputs

True Differential VOUT Sense Inputs

Thermal Sense Input

Thermal Alarm

Phase Control (Dual / Single Phase Operation)

5-Bit VID for **0.4 – 1.25V VOUT**

Temperature Compensated **DCR Current Sensing** or **RSENSE Current Sensing**

3 – 28V Power Path Input

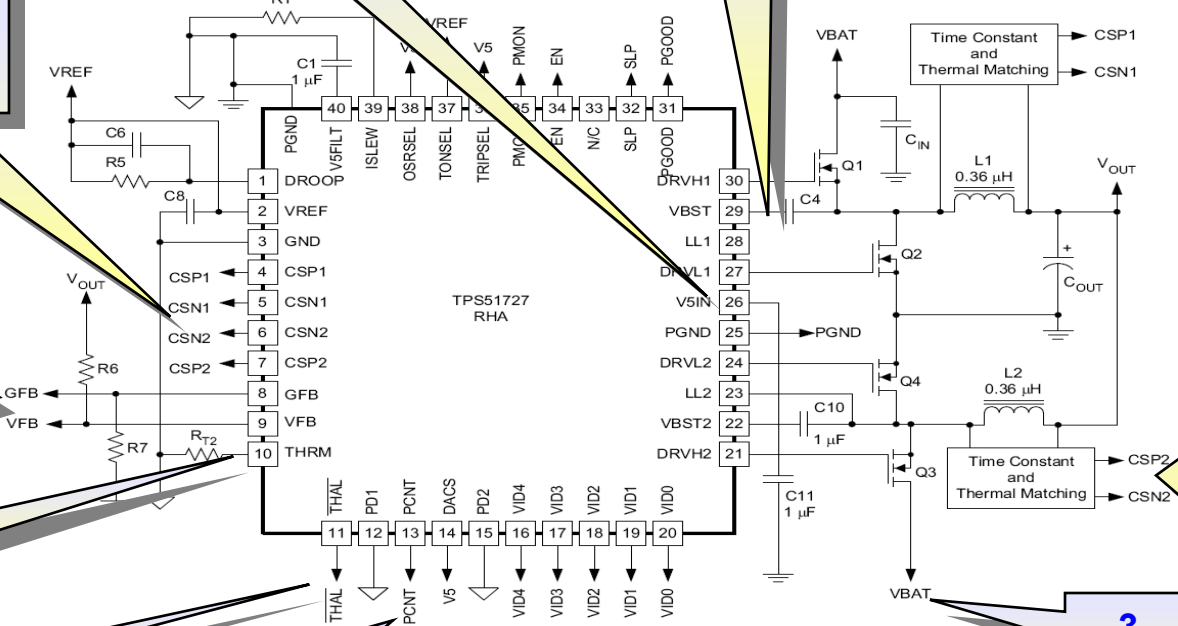

Texas Instruments

General Purpose VID Power Solution

TPS51727
for more than 20A

Full Featured General Purpose Dual Phase ECO-Mode™ D-Cap+™ Buck Controller with 5-Bit VID

Selection of OSR-Level (Min, Medium, Max, OFF)

Selection of Switching Frequency (200, 300, 400, 500kHz)

OCP Selection (11, 14, 18, 24mV Valley Trip Level)

Analog **POUT Monitor**

Programming of Slew Rate for VID On the Fly

Selection of **Output OVP** (ON / OFF)

Programming of Droop Characteristic

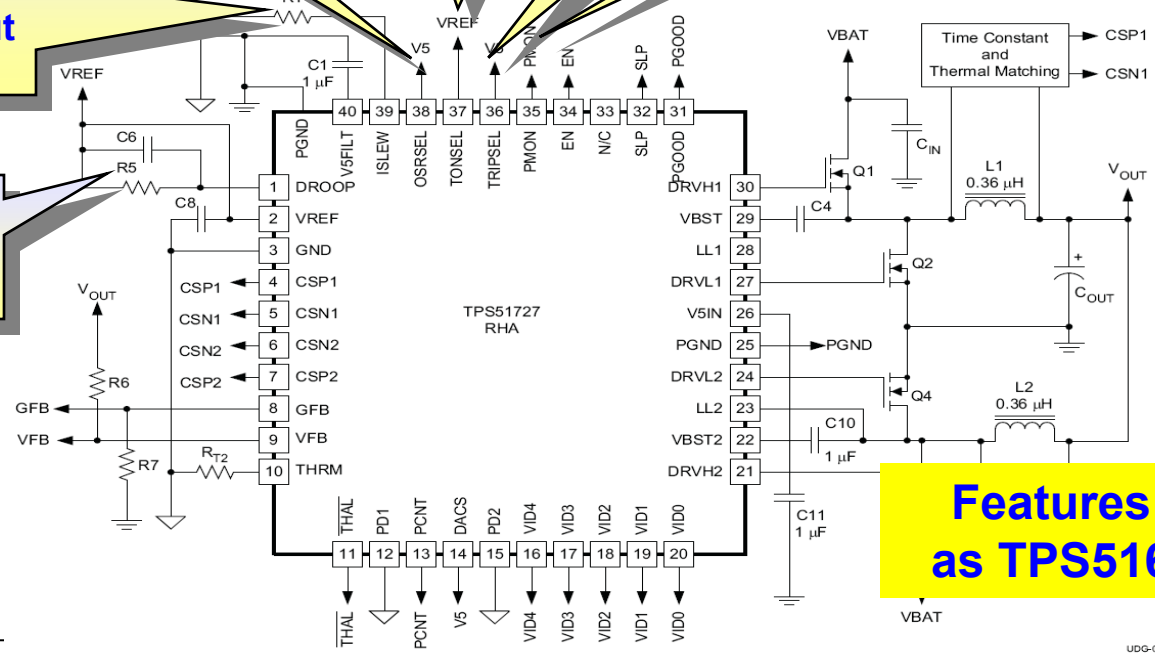

Features are similar as TPS51620 features

UDG-08003
Texas Instruments

OSR™ (OverShoot Reduction) Technology

Assumptions:

- Ideal converter, with VIN= 12V and VOUT=1.2V
- Voltage across inductor is 10.8 V (12 V – 1.2 V) during HS-FET ON
- Voltage across inductor is only 1.2 V during LS-FET ON
- During load release complete inductor energy will be dumped into output capacitor and VOUT will overshoot desired level.

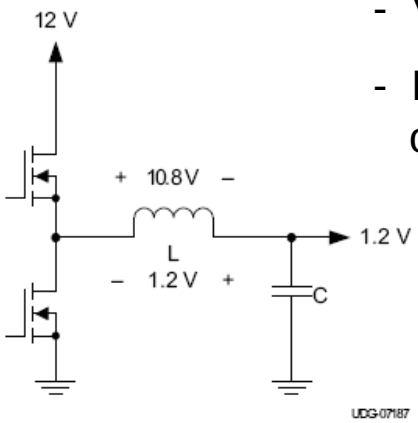

With OSR™ the low side FETs shut off when overshoot is detected. The voltage created by the forward voltage drop of the low side FET body diodes is applied across the inductor slewing the current faster than if the FETs were still on.

The inductor energy is partially dissipated by the body diodes. The overshoot is thus significantly reduced. To implement OSR, simply terminate the OSRSEL pin to the desired voltage to select one of four different OSR levels:

- GND = Minimum voltage (Maximum reduction)
- VREF = Medium voltage
- +3.3V = Maximum voltage
- 5V = OSR off

OSR™ helps greatly in reducing the number of expensive output capacitors

Effect of OSR™

3 x 330uF 6 mohm ESR + 16 x 10uF, L=0.36 uH, Fs=300kHz

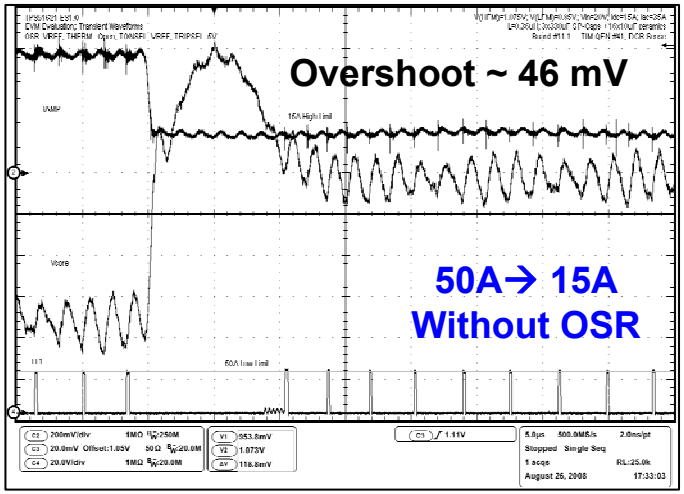

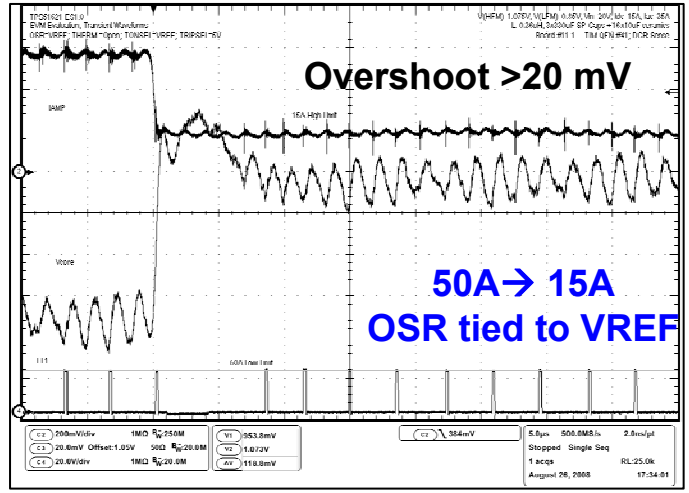

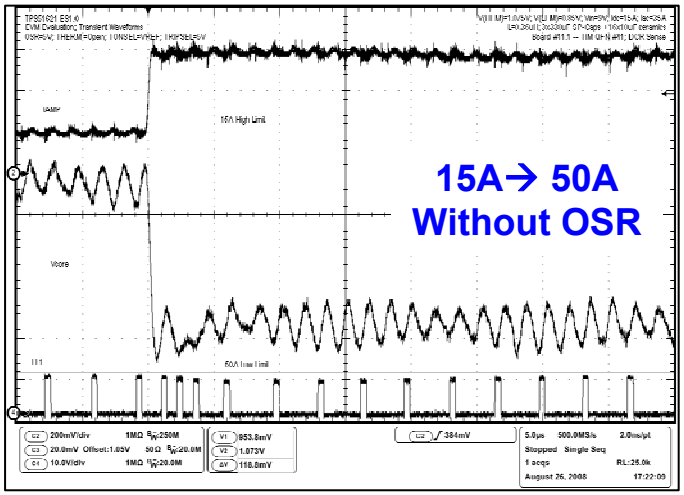

OSR™ helps greatly in reducing the number of expensive output capacitors or in reducing significantly the overshoot under load dumps.

Texas Instruments

Seamless Phase Add / Drop Operation!

TI Phase Control (PCNT) Causes No Negative VOUT Transient for PCNT Transitions

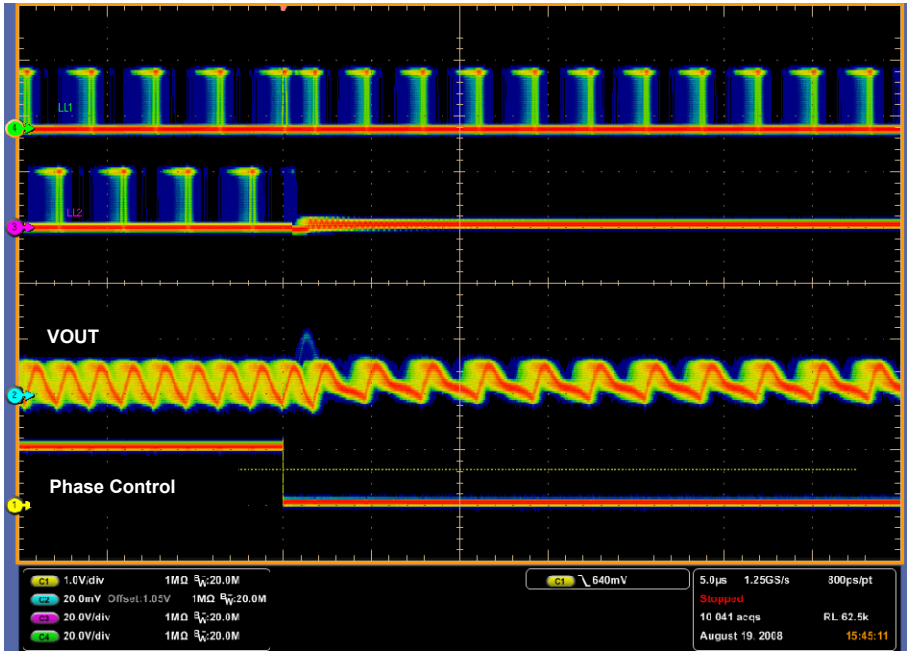

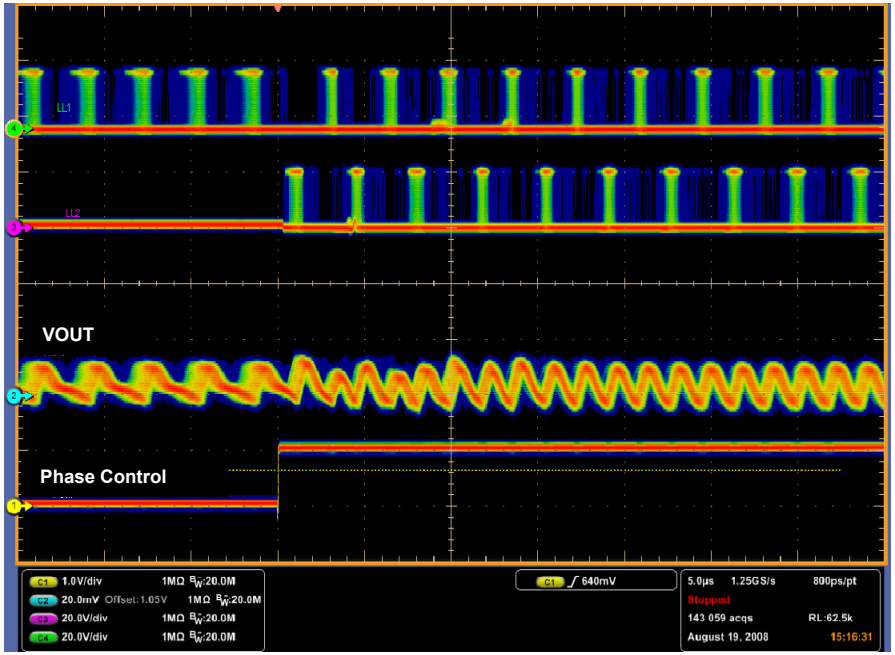

D-Cap+™ is very well suited for Advanced Phase Management

Texas Instruments

AutoBalance™ Current Sharing

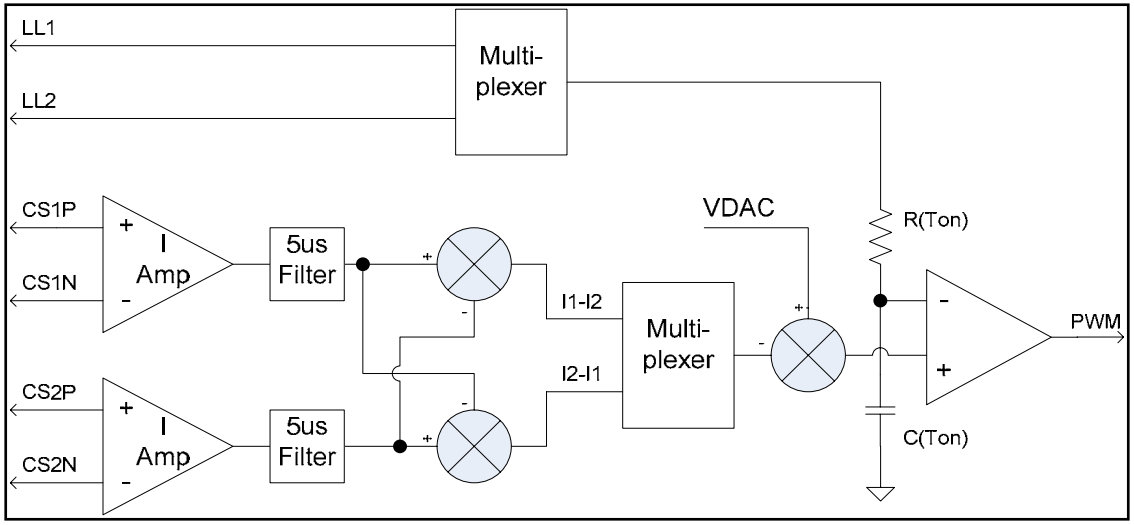

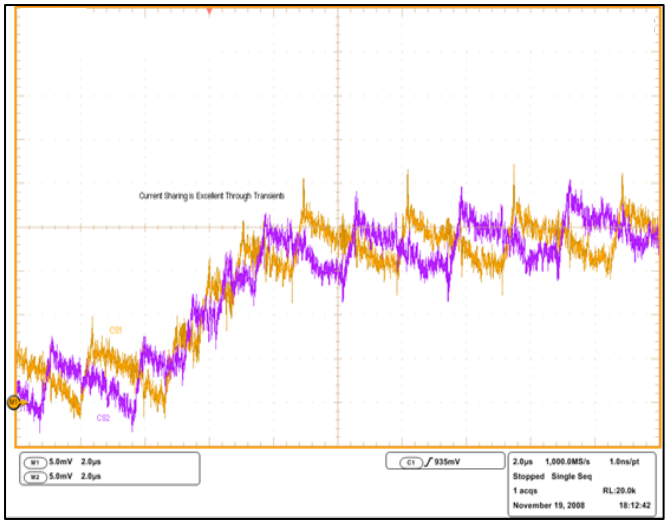

AutoBalance™ is Extremely User Friendly

- No Extra Components Are Required
- No Calculations are Necessary
- **All Circuitry is Internal** to the IC
- **Blocks are Multiplexed** for **high Acuracy**
- Light Filtering Ensures **Fast Response**
- **Current Sharing** Maintained **even through Transients**

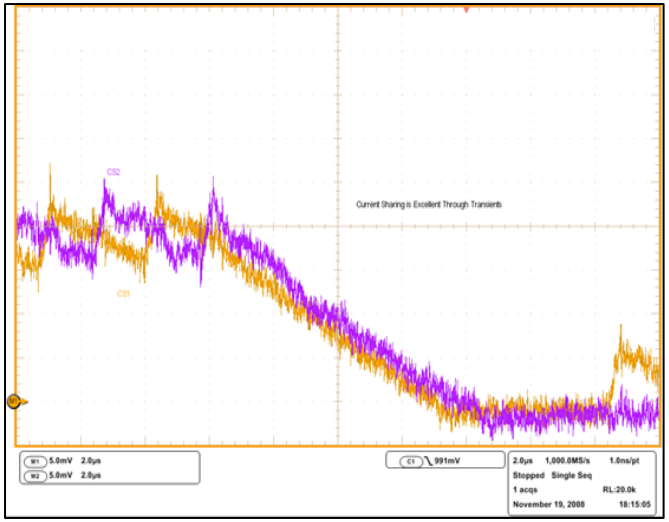

Texas Instruments

AutoBalance™ Current Sharing

DC Current Sharing Performance

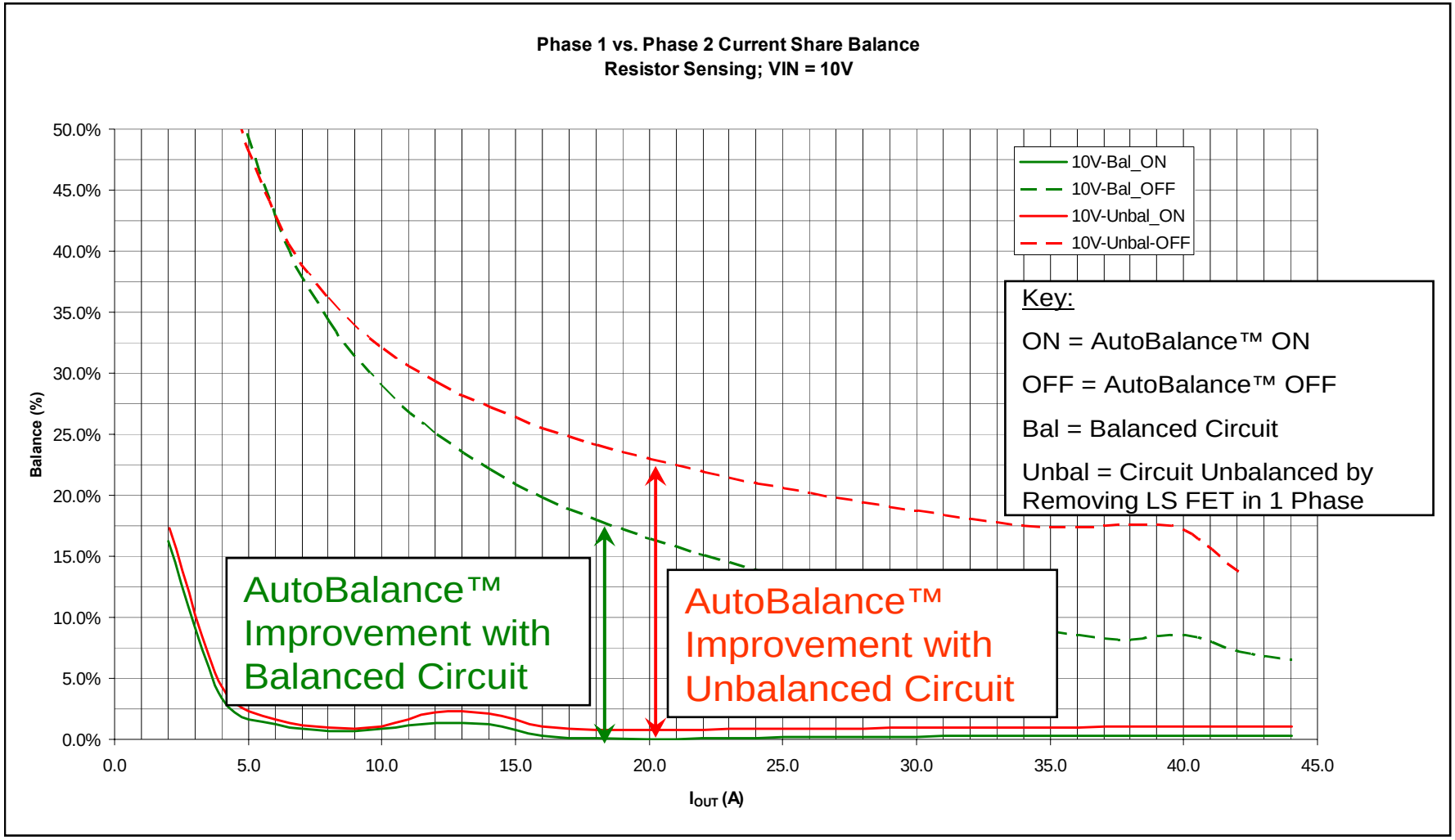

Texas Instruments

General Purpose System Power Solution

Dual ECO-Mode™ Buck Controller for up to 99% Dutycycle with 5V / 100mA Switch-Over LDO and 3.3V / 10mA RTC LDO

TPS51220(A) / 221 / 222 Both Phases synchronized and phase shifted to each other

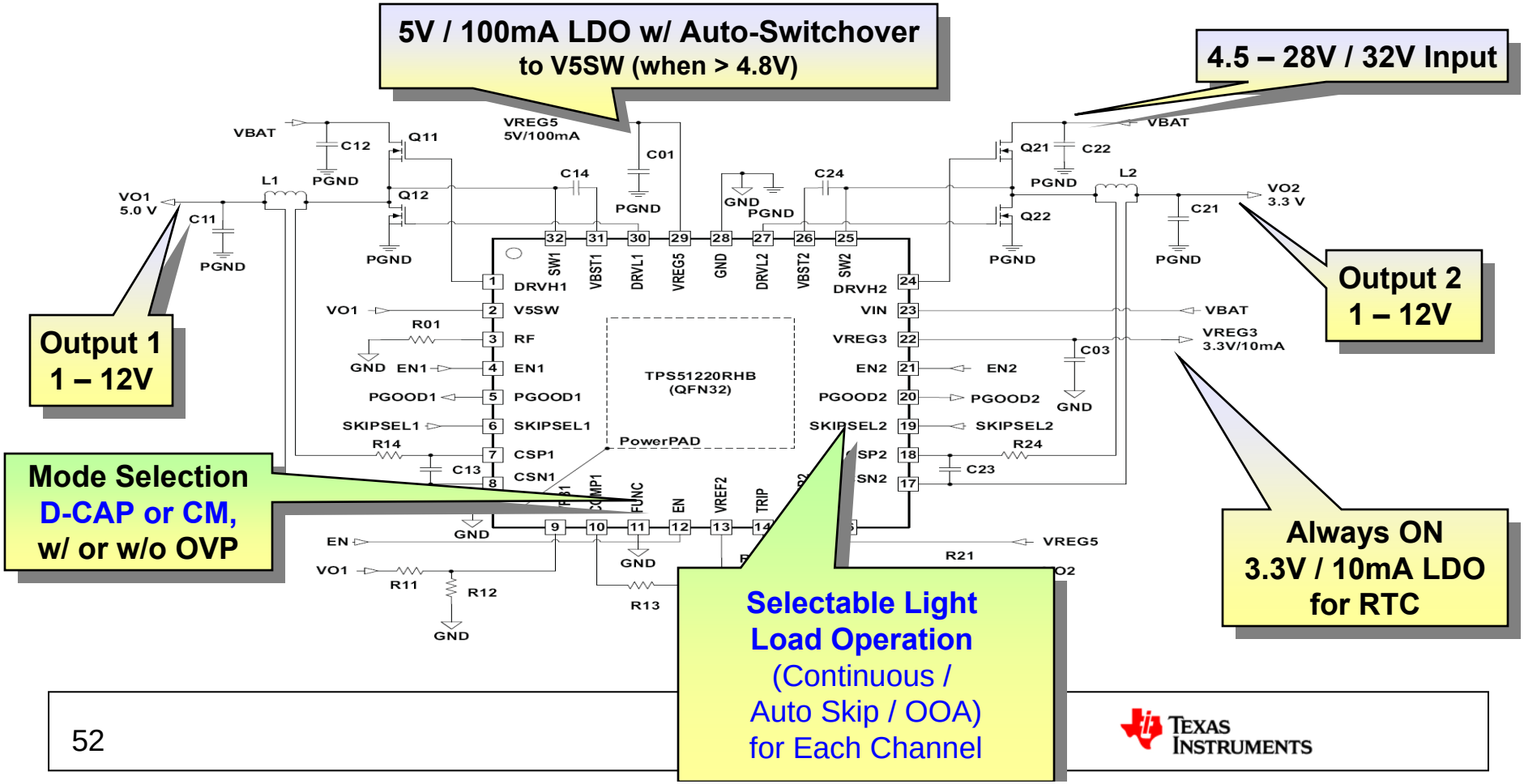

Texas Instruments

General Purpose System Power Solution

Dual ECO-Mode™ Buck Controller for up to 99% Dutycycle with 5V / 100mA Switch-Over LDO and 3.3V / 10mA RTC LDO

TPS51220(A) / 221 / 222 Both Phases synchronized and phase shifted to each other

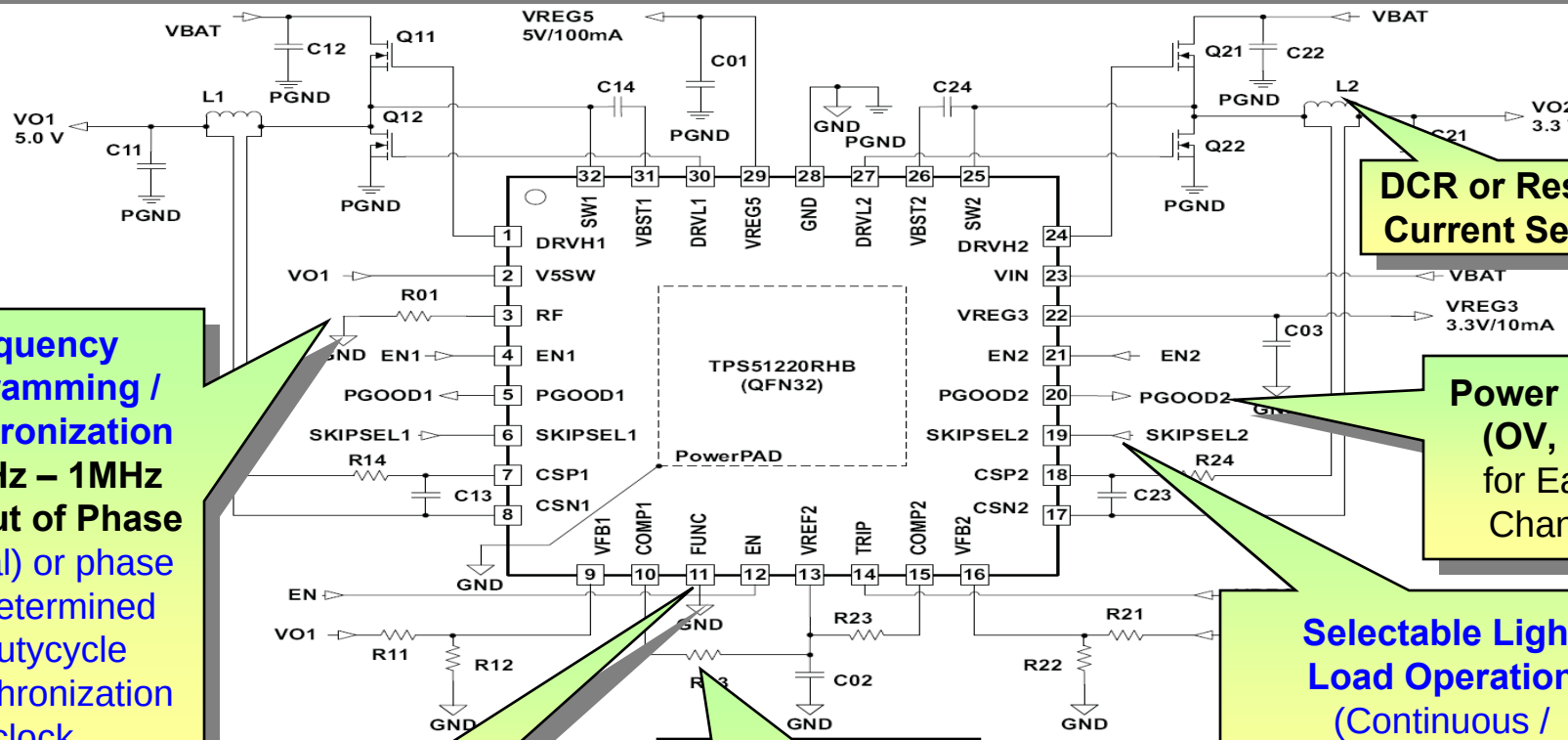

Texas Instruments

General Purpose System Power Solution

Dual ECO-Mode™ Buck Controller for up to 99% Dutycycle with 5V / 100mA Switch-Over LDO and 3.3V / 10mA RTC LDO

TPS51220(A) / 221 / 222 Both Phases synchronized and phase shifted to each other

	TPS51220	TPS51221	TPS51220A	TPS51222
VIN Range (V)	4.5 - 28		4.5 - 32	
OVP Disable	✓		✓	
Current Monitor Output		Channel 1		Channel 1 + 2
Modes of Operation	CM or D-CAP™ selectable	CM only	CM or D-CAP™ selectable	CM only
VOUT Discharge	Selectable (Enable / Disable)			✓
Adaptive Zero Crossing Detection			✓	
Internally Clamped COMP-Pin			✓	
OC Limit Threshold (mV)	31 / 60 selectable			60
Package	0.9 mm QFN32 (5x5 mm)	0.75 mm QFN32 (5x5 mm)		

Agenda

- General Thoughts
- Linear Regulators
- Switch Mode Regulators
- Buck Converter Solutions
- **Boost Converter Solutions**
- Buck-Boost & Other Converter Solutions
- Power Multiplexing
- Voltage Supervision

Steady State Analysis – Boost

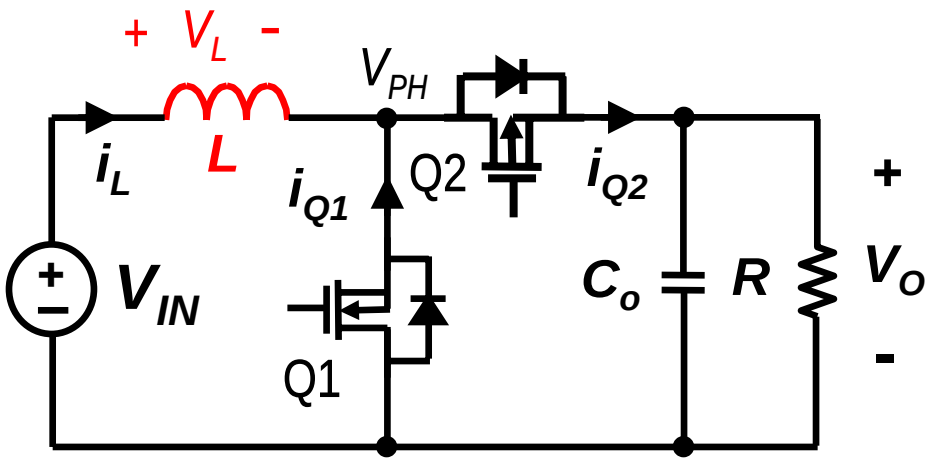

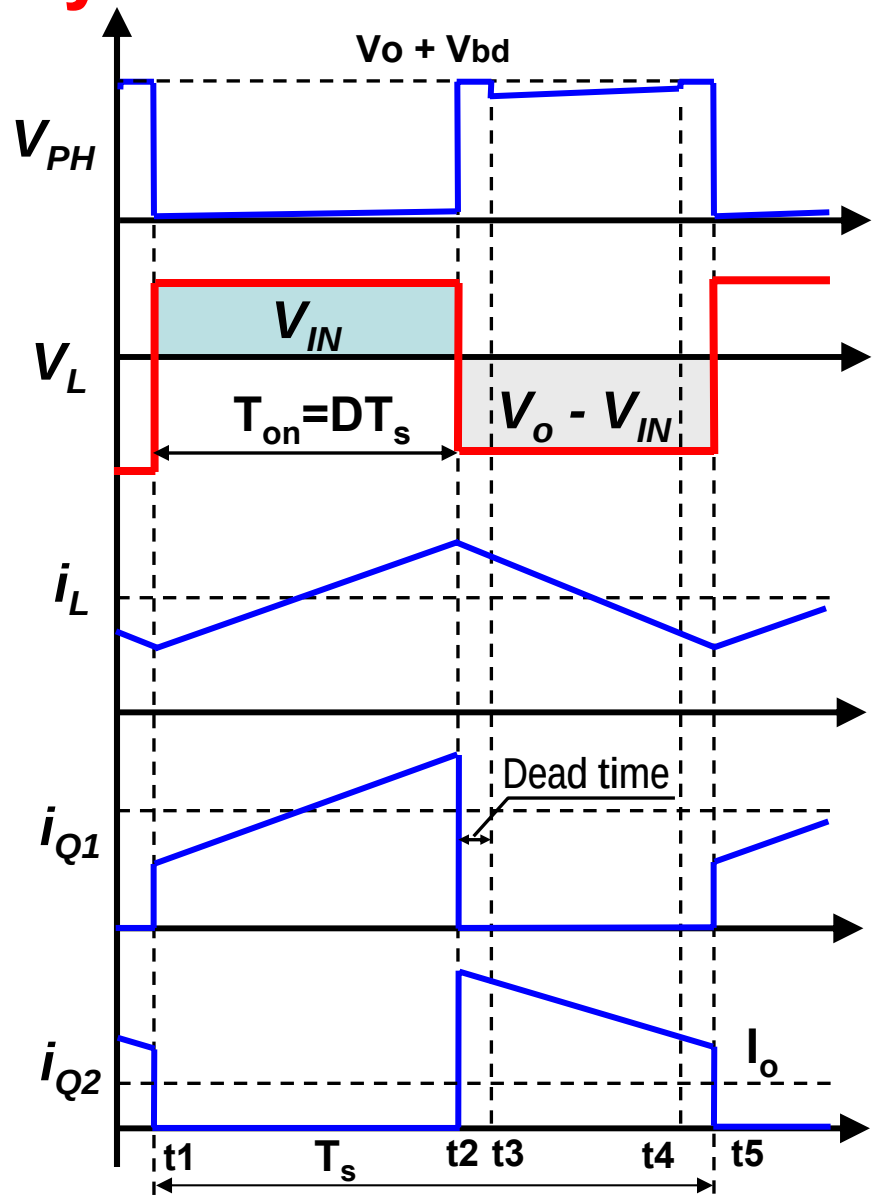

Volt-Second balance across L in Steady-state and CCM

$$V_{IN} \cdot DT_S = (V_O - V_{IN}) \cdot (1 - D) T_S$$

$$\frac{V_O}{V_{IN}} = \frac{1}{1 - D}$$

Texas Instruments

Basic Boost Issues

- **Load Connected to Battery Even When Converter is Disabled**
  - Load Always Connected to Input (via Boost Diode / Body Diode of Boost Switch)
  - Special Implementations Required
- **Pulsating Output Current**
- **Input and Switch Current is Multiple of I_{OUT}**
  - Even More Trouble for Start-Up than with Buck
  - Rule of Thumb: $I_{OUT} \approx 0.65 \times I_{LIM(min)} \times V_{IN} / V_{OUT}$

Texas Instruments

Backgate Control Used for True Load Disconnect

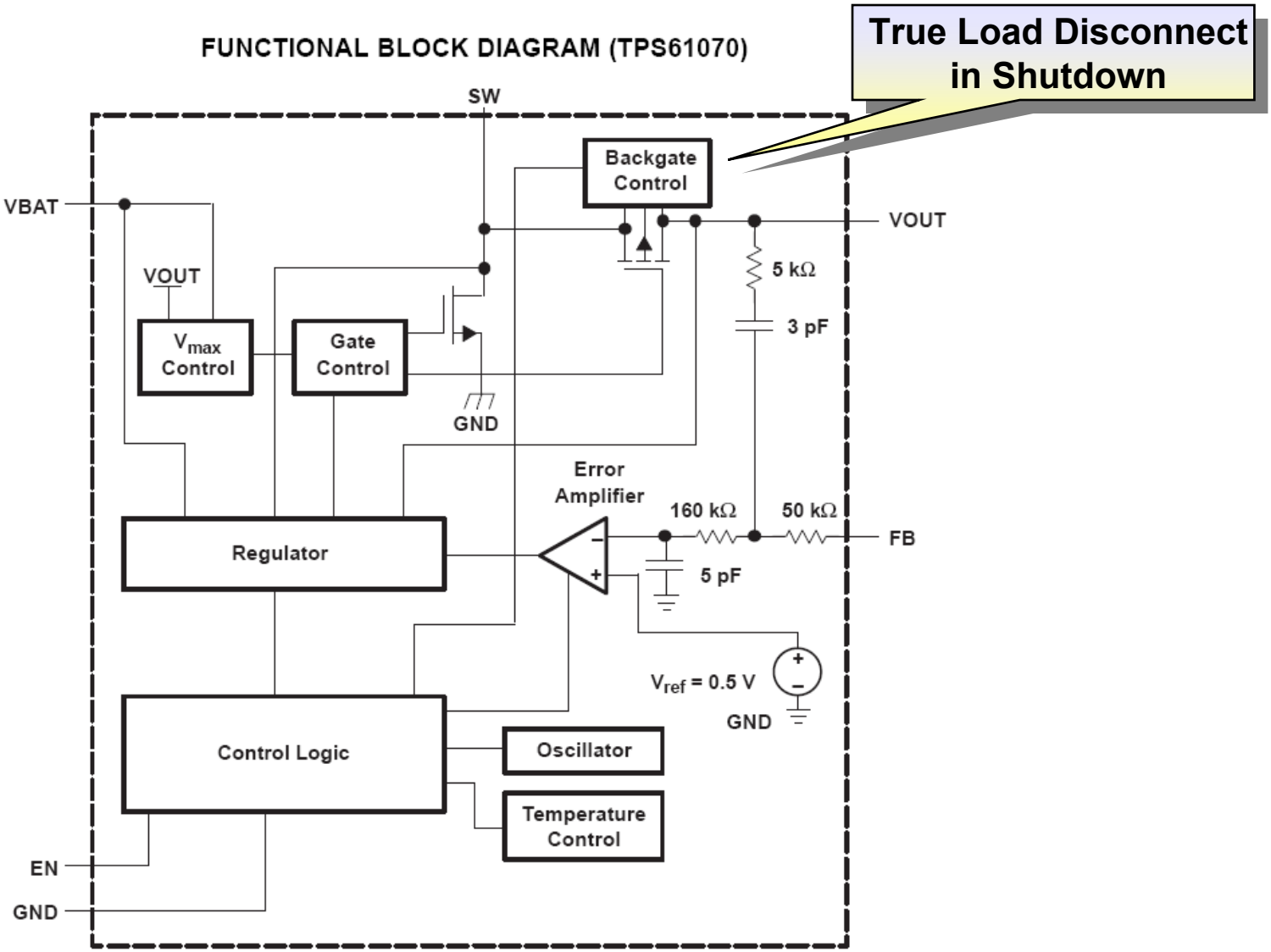

Texas Instruments

Simplified Start-Up Control

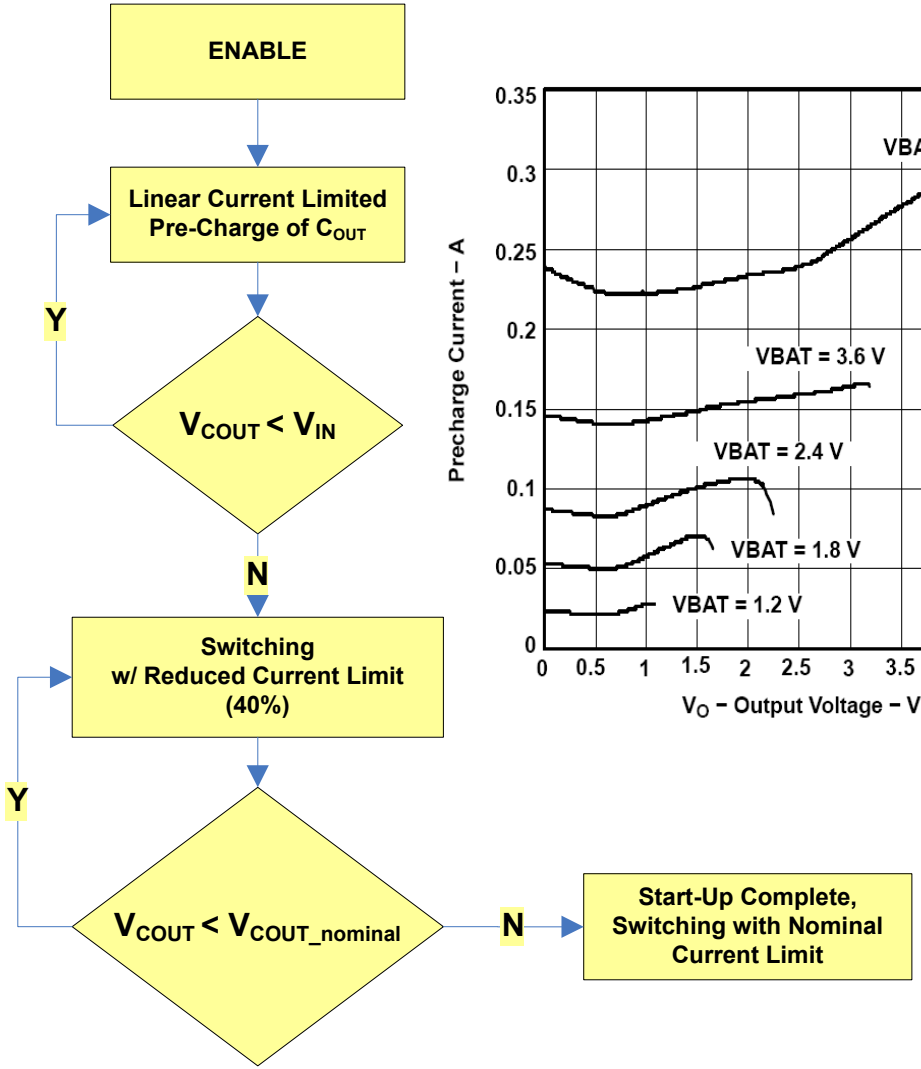

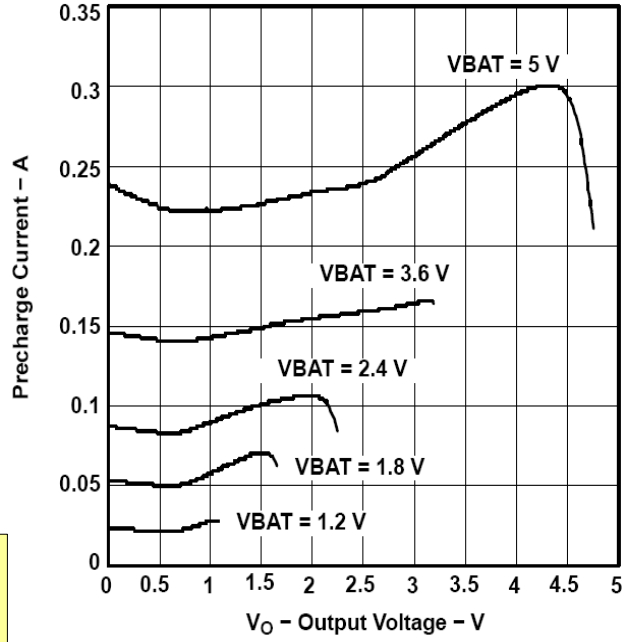

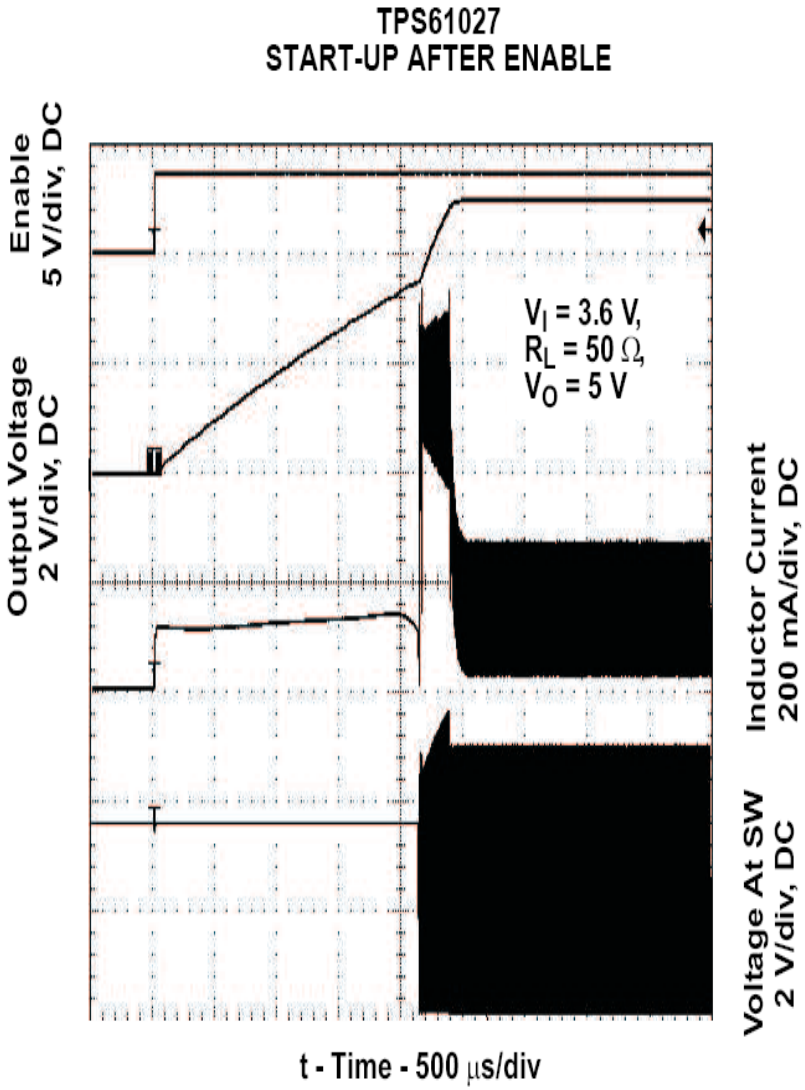

Boost as LED Driver w/ True Disconnect

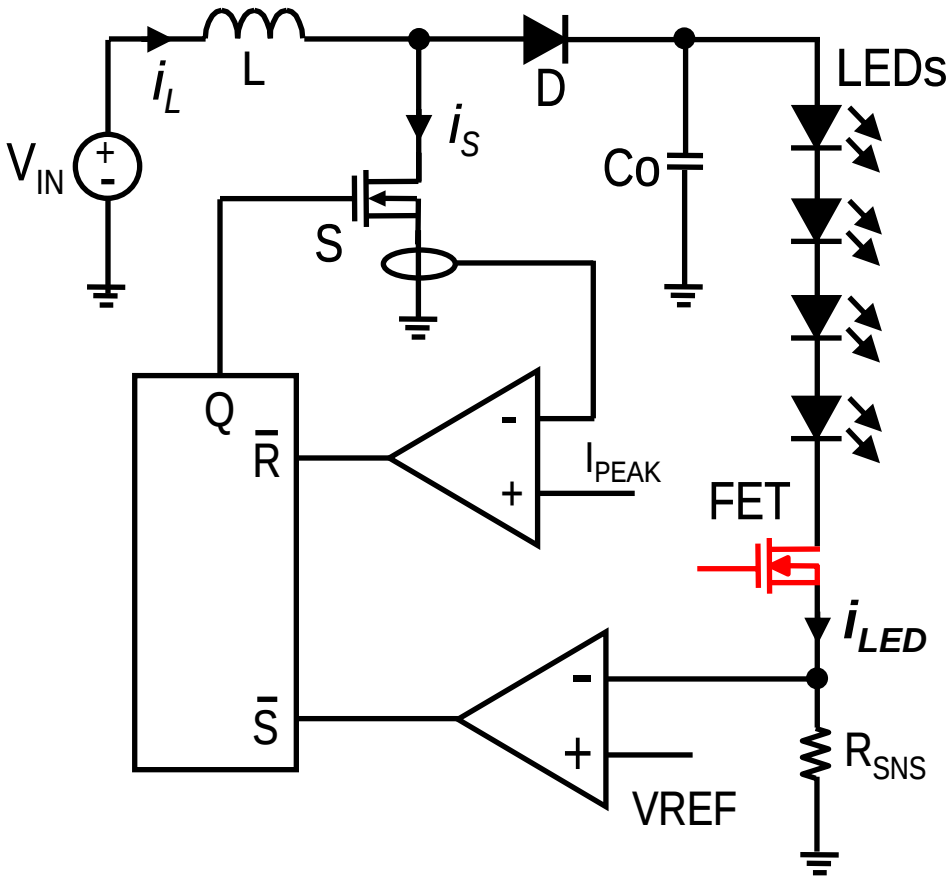

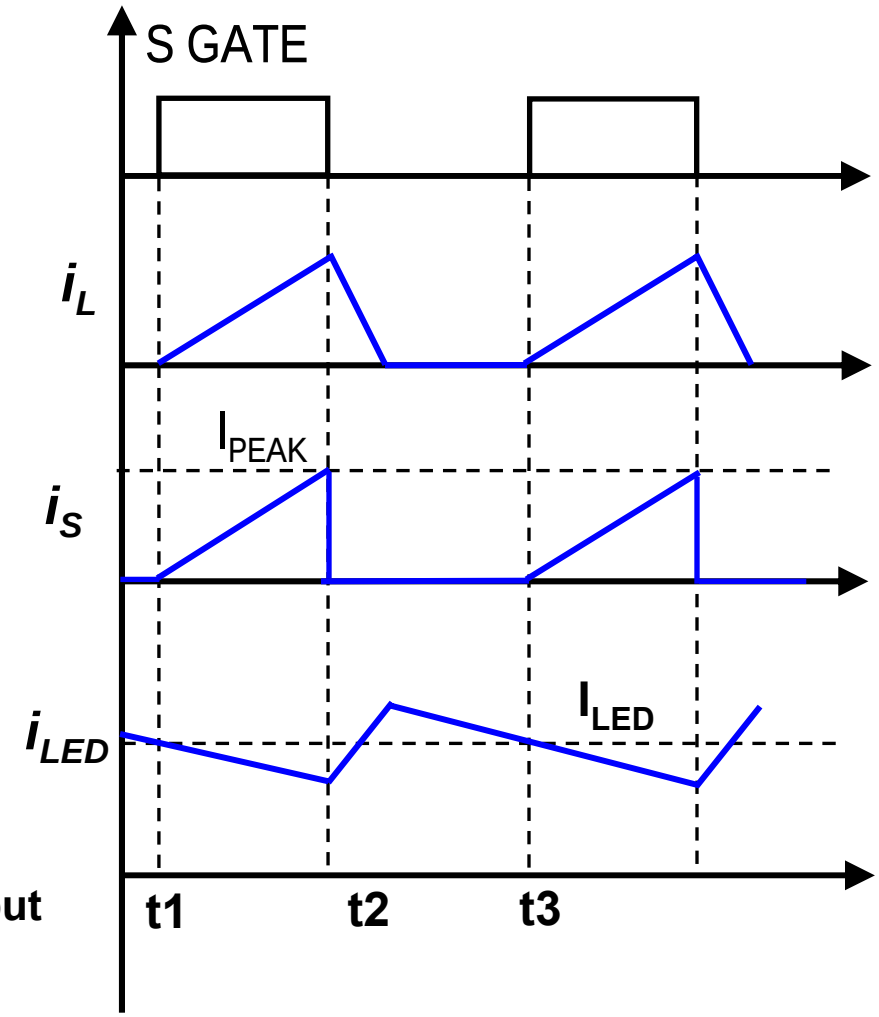

Constant sensing voltage = Current source output

No leakage from battery to output (FET: OFF)

Texas Instruments

Increase I_{OUT} and Efficiency by Use of Higher Power Path V_{IN} Path (For Non-Synchronous Boost ONLY)

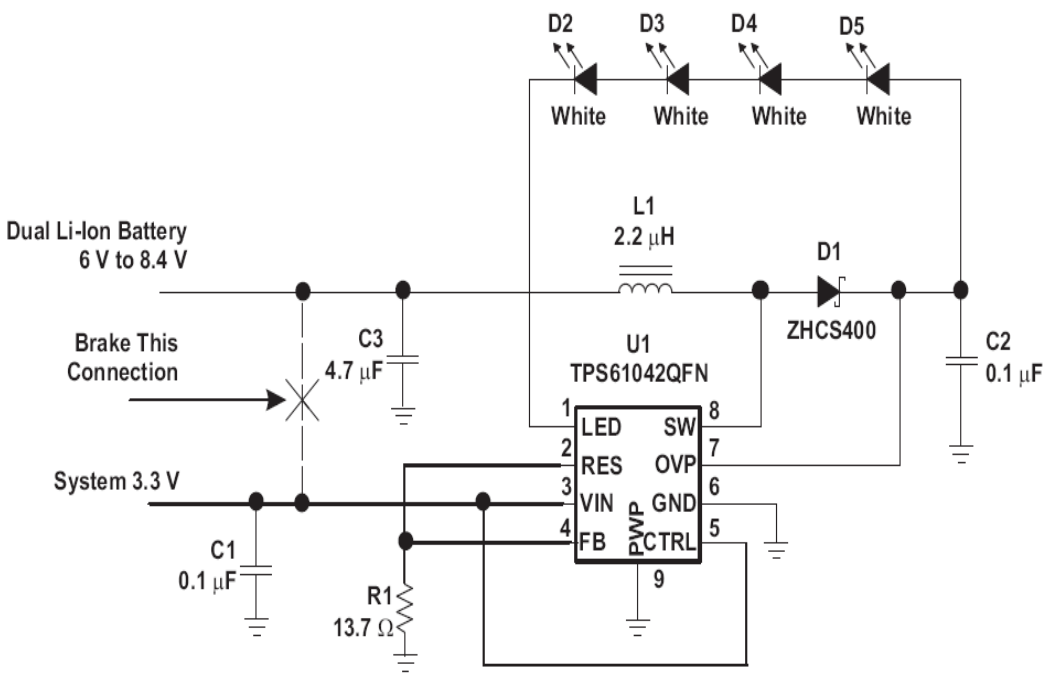

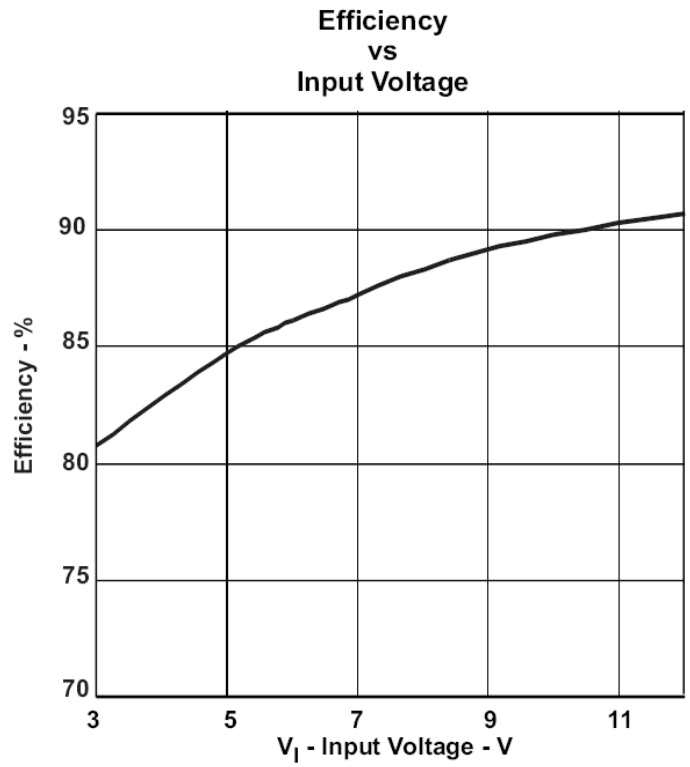

Application Note:
Operating the TPS61042 from Two Li-Ion and Input Voltages Higher than 6V - slva244

Constant Current Boost Converter for LED / PWM-Dimming

TPS61042 400mA min Switch Current / 29V OVP
TPS61043 320mA min Switch Current / 18V OVP

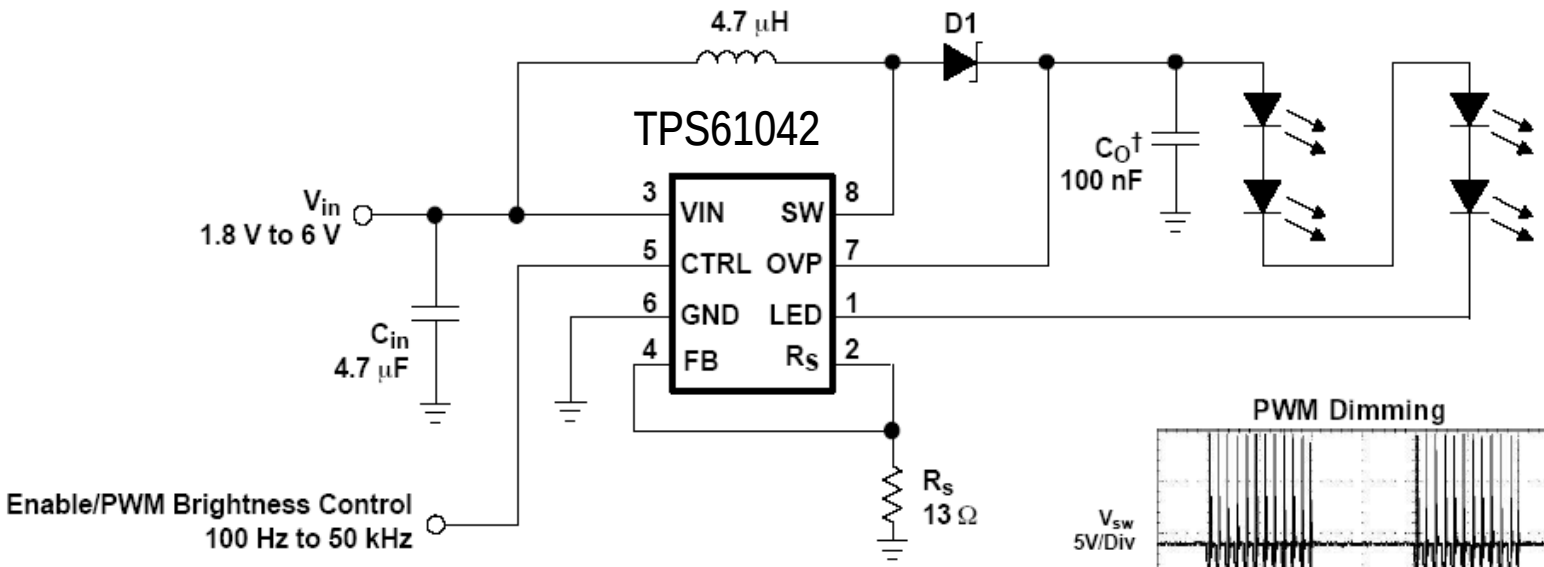

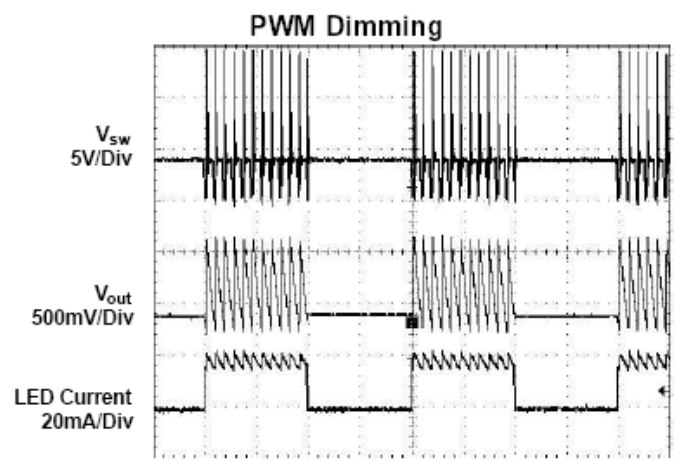

- Load disconnect in Shutdown
- 252mV Feedback Voltage
- Overvoltage Protection
- Smaller Output Capacitor
- PWM Control up to 50kHz

Texas Instruments

Analog Dimming

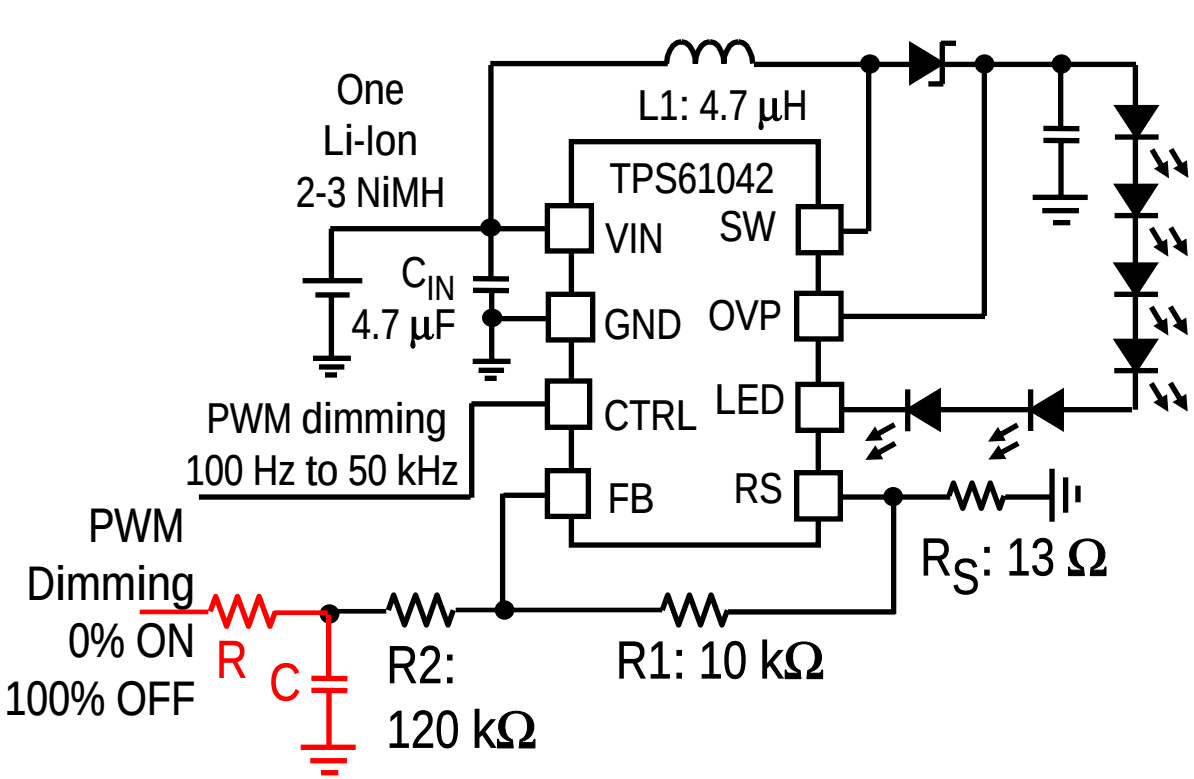

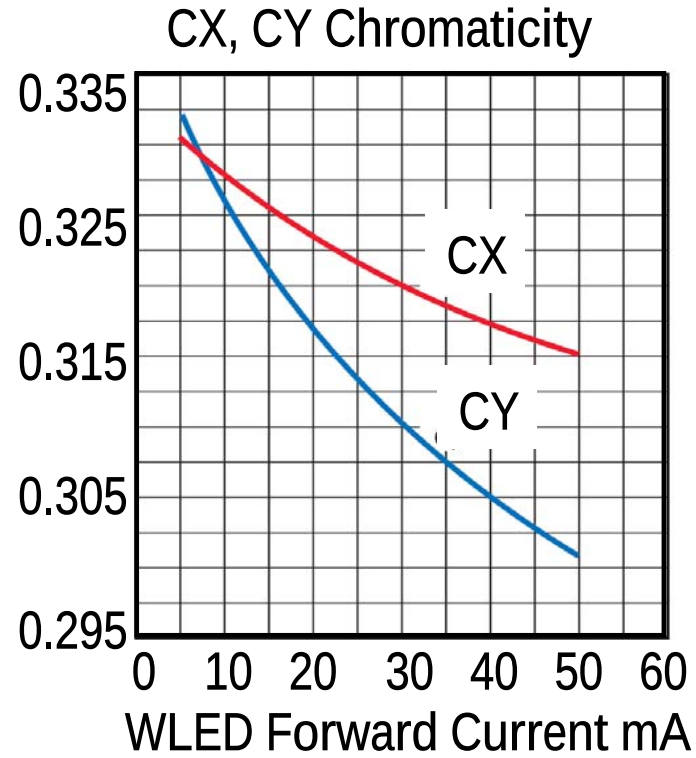

- **PWM to Analog through a LOW PASS FILTER**
- **No Audible Noise !!!**
- **Low dimming, poor luminescence quality (NOT close to natural light)**

TPS61060 Digital Dimming

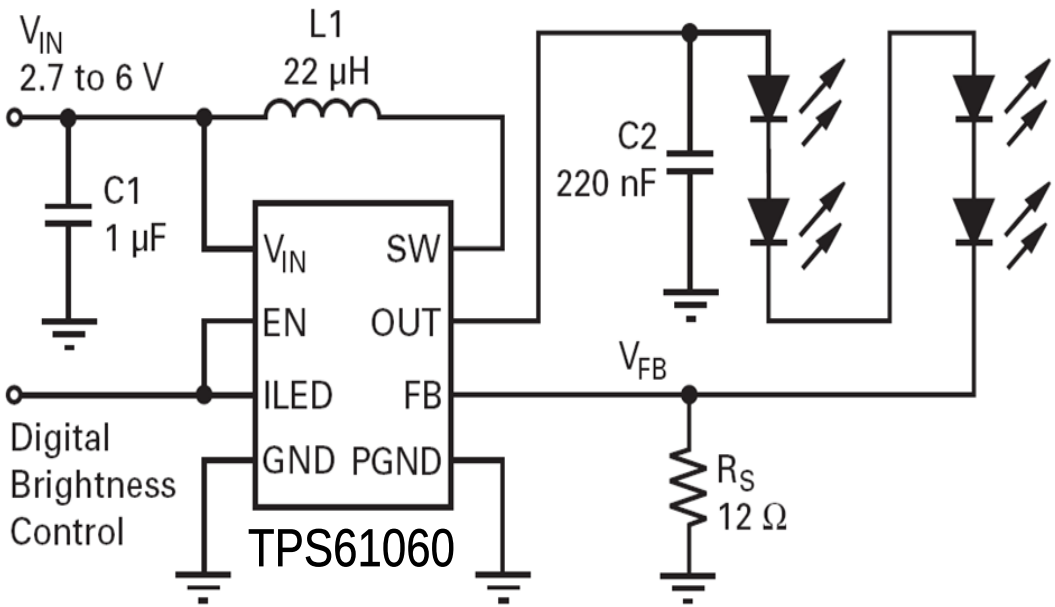

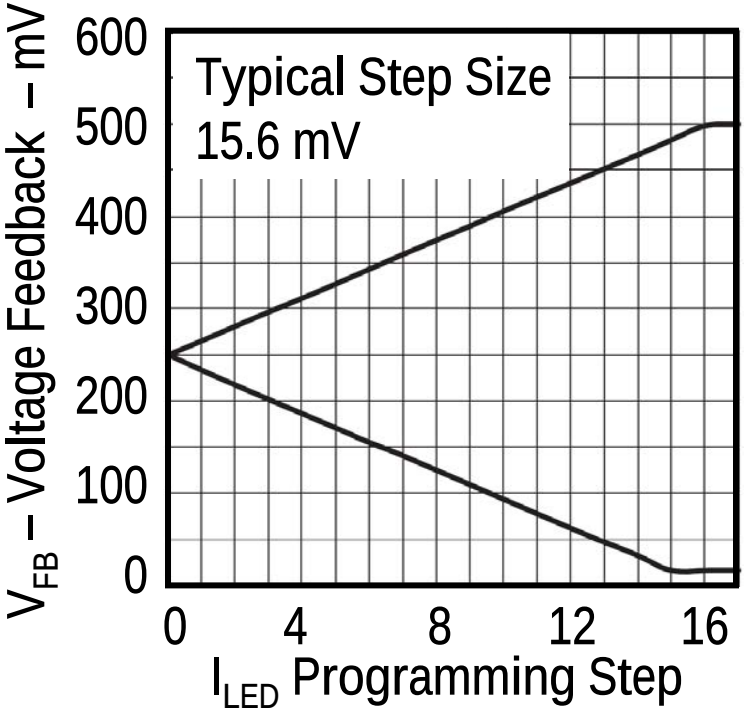

- **Has application-specific digital interface (I^2C, EasyScale, etc.)**
- **DAC changes WLED current**
- **Does not require PWM signal all the time**
- **No external components**

Boost LED Driver for up to 6 Strings w/ up to 10 LEDs

TPS61180 1.5A min Switch Current , 1 MHz Switching Frequency w/o internal LDO
TPS61181 1.5A min Switch Current , 1 MHz Switching Frequency w/ internal 3.3V LDO
TPS61182 1.5A min Switch Current , 1.3 MHz Switching Frequency w/ internal 3.3V LDO

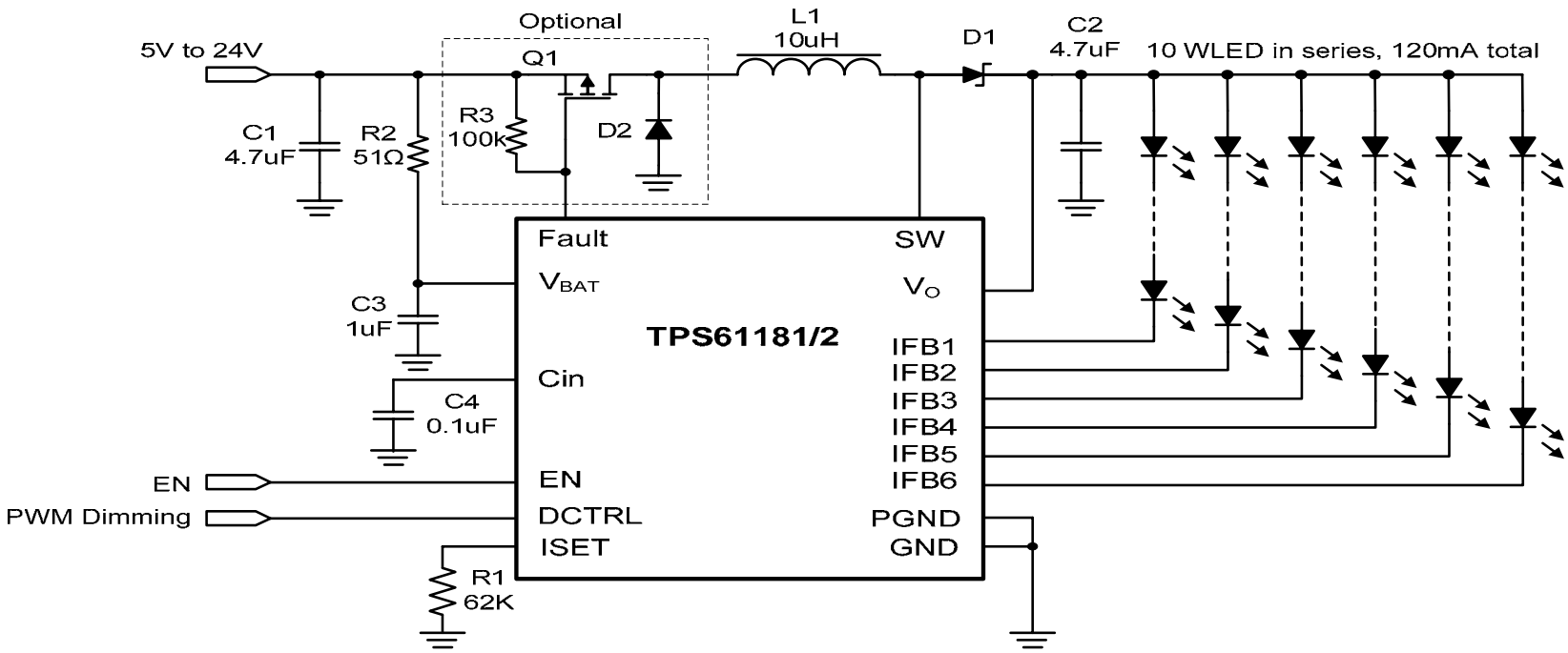

Ultra-Low VIN Boost Converters for Battery, Solar- & Fuel Cell Applications

TPS61200	Adj VOUT	1200mA I_{SWITCH_min}
TPS61201	3.3V VOUT	
TPS61202	5V VOUT	

Ultra-Low VIN Boost with Down Convers. Mode

- **1.45MHz Switching Frequency**
- **Start-Up into full load with 0.5V input**
- **55µA Quiescent Current**

0.3 … 5.5V Input

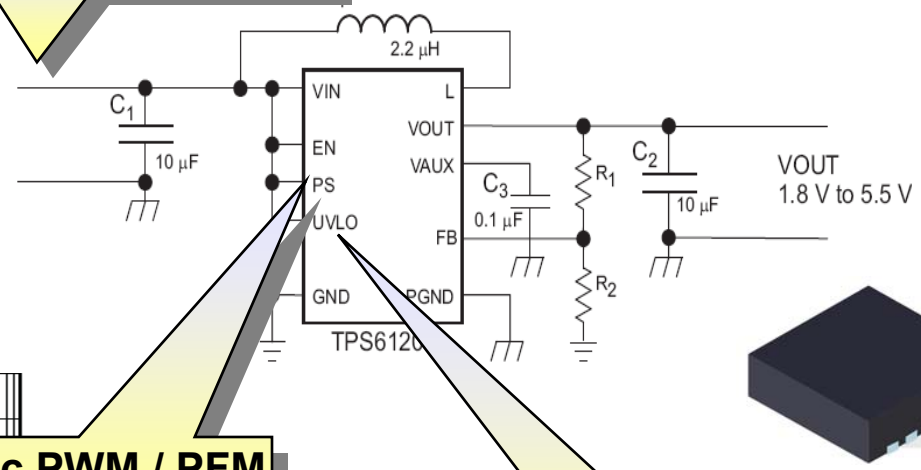

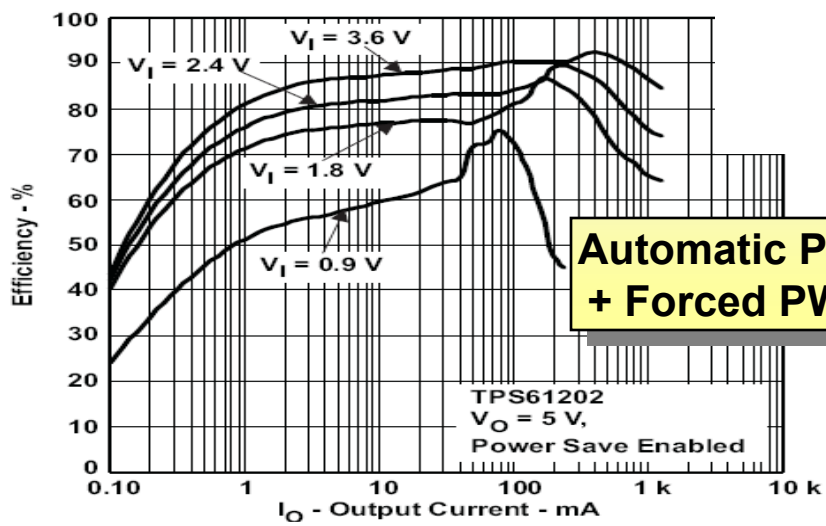

Automatic PWM / PFM + Forced PWM Mode

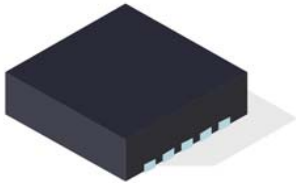

3 x 3 QFN

Programmable UVLO

Texas Instruments

Ultra-Low VIN Boost Converters for Battery, Solar- & Fuel Cell Applications

TPS61220	Adj VOUT	200mA I_{SWITCH_min}	Ultra-Low VIN Boost
TPS61221	3.3V VOUT		
TPS61222	5V VOUT		

SC-70
2 x 2.1mm²

- Start-Up into load with 0.7V input
- 5.5µA Quiescent Current

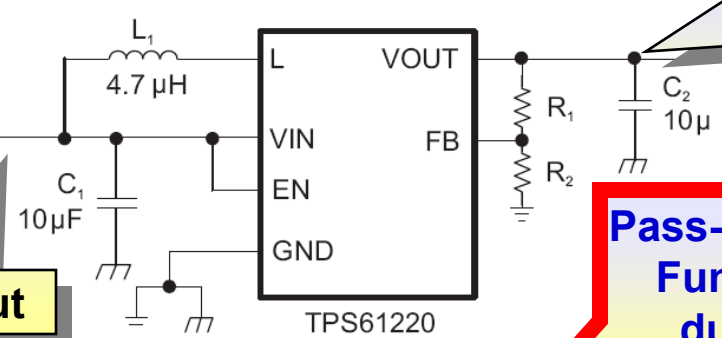

1.8 … 5.5V Output (>VIN !)

0.7 … 5.5V Input

Pass-Through Function during Shutdown

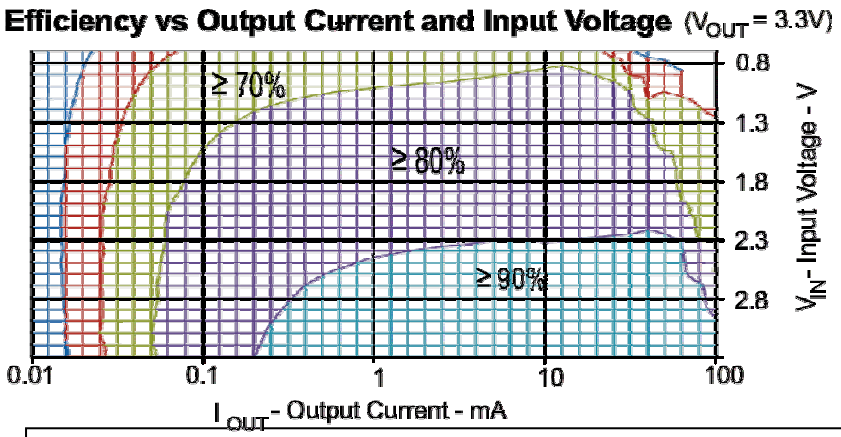

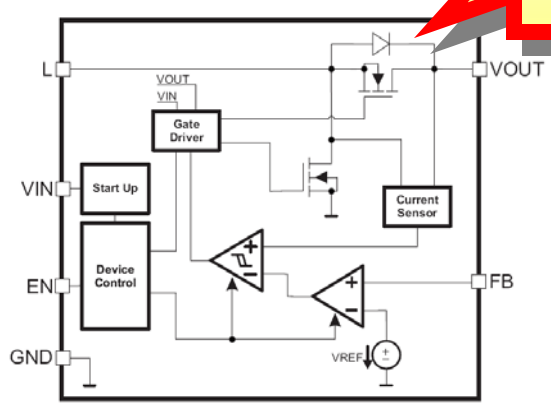

Texas Instruments

Ultra-Low VIN Boost Converters for Battery, Solar- & Fuel Cell Applications

TPS61097-xx Adj / 1.8 / 2.7 / 3.0 / 3.3 / 5.0 VOUT, 200mA I_{SWITCH_min} Boost with Bypass Switch

0.9V … 5.5V Input

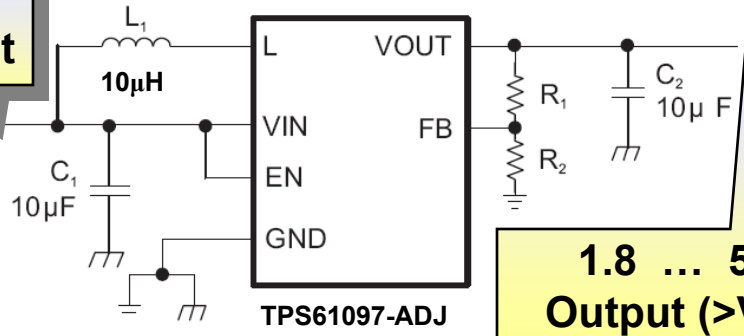

1.8 … 5.0V Output (>VIN !)

3.4Ω Bypass FET connects Power Source to Output when in Shutdown

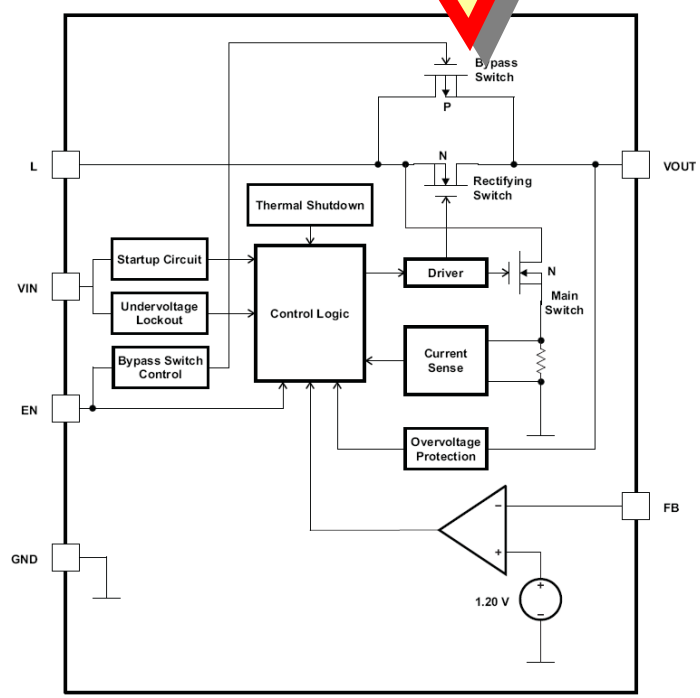

- **5µA Quiescent Current**
- **5nA Shutdown Current**
- **Power Save Mode**
- **SOT23 Package**
  3 x 3mm SON6 (Preview)
- **Only 3.3V RTP'd**
  all other versions on PREVIEW

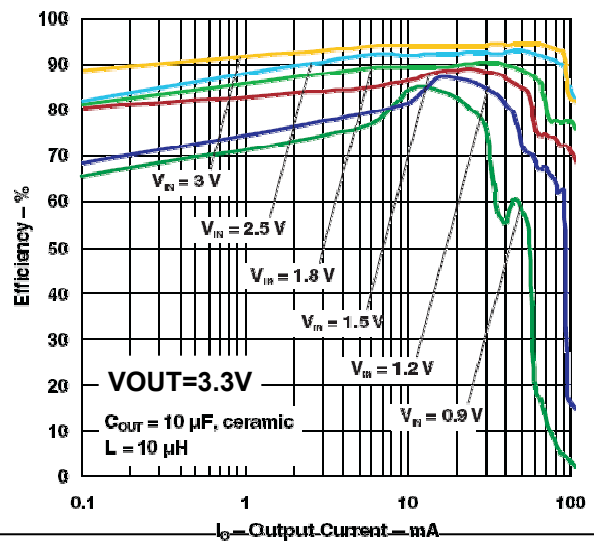

Texas Instruments

Smallest General Purpose Boost

TPS61170 1.2MHz Boost w/ 960mA minimum switch current

3 – 18V IN

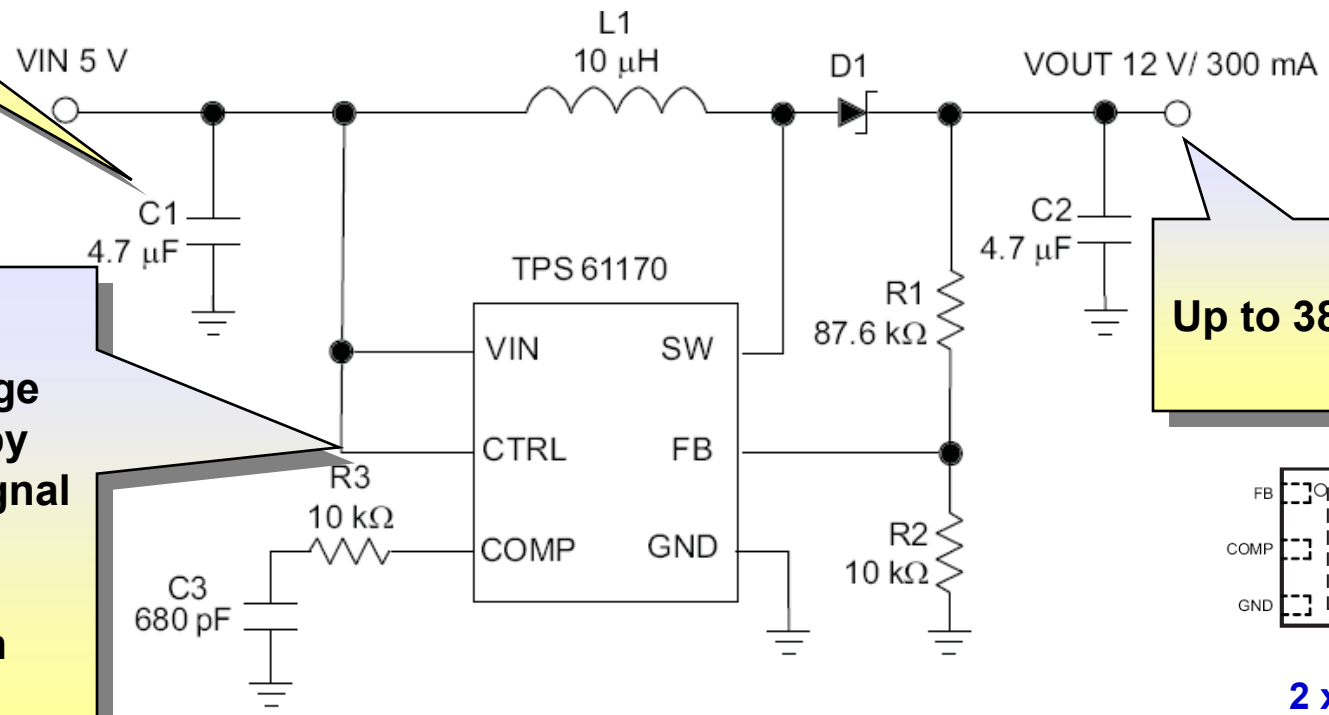

Up to 38V OUT

On the Fly Feedback Voltage Programming by external PWM-Signal or EasyScale™ (32 Steps from 0 – 1.229V)

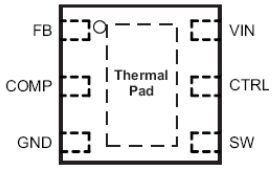

2 x 2 mm QFN Package

See TPS61175 for higher currents (3A minimum switch current), HTSSOP14

Texas Instruments

Agenda

- General Thoughts
- Linear Regulators
- Switch Mode Regulators
- Buck Converter Solutions
- Boost Converter Solutions
- **Buck-Boost & Other Converter Solutions**
- Power Multiplexing
- Voltage Supervision

Why Do We Need Buck-Boost Converters?

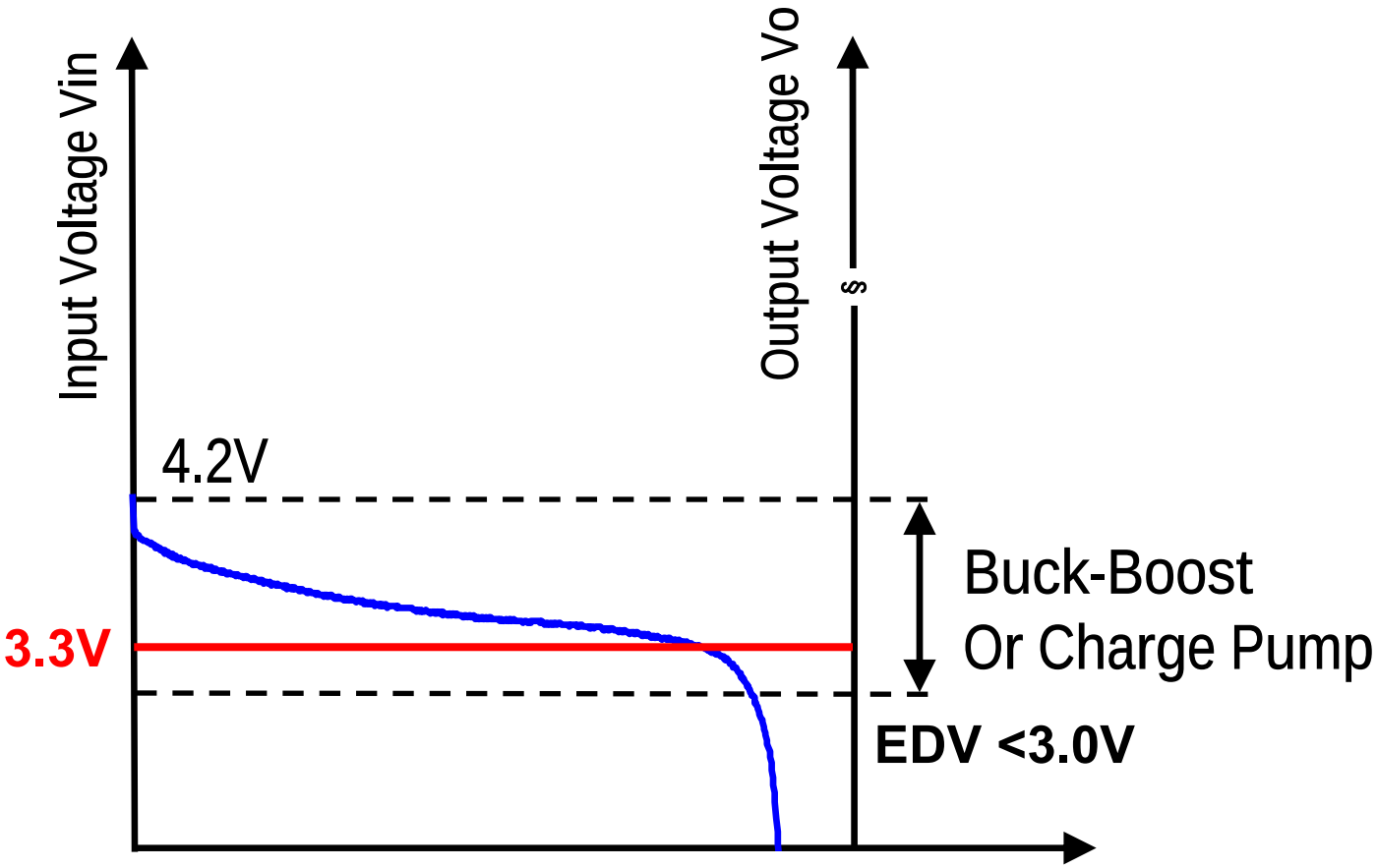

High Efficiency Non-Inverting Buck + Boost DC/DC Converter

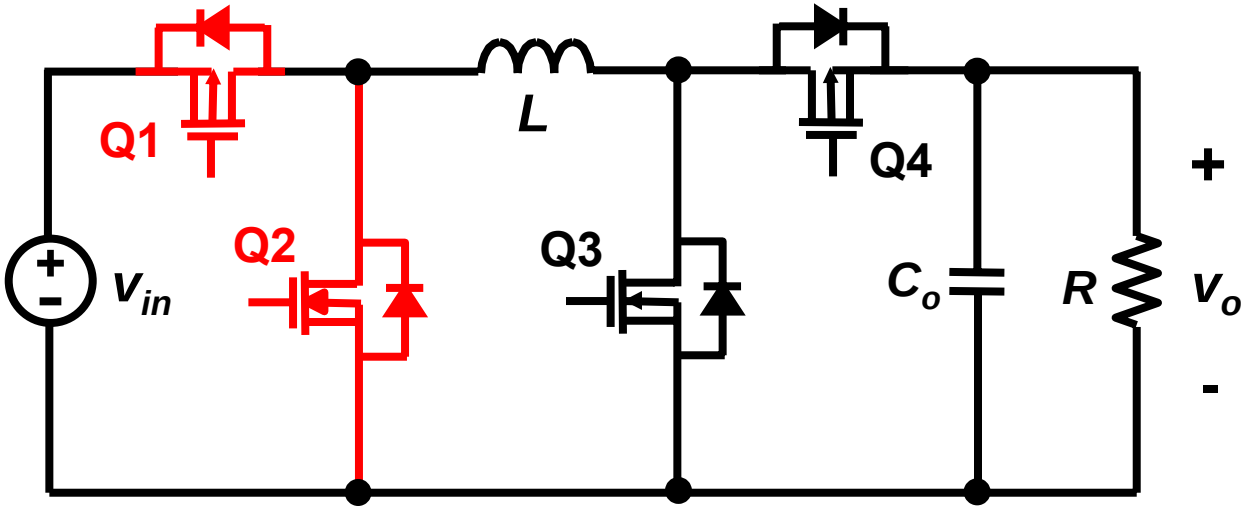

	Q1	Q2	Q3	Q4	Voltage Gain
Buck	Switching	Switching	OFF	ON	D
Boost	ON	OFF	Switching	Switching	1/(1-D)

- Operate either Buck or Boost
- Traditional buck-boost: D/(1-D): higher loss, and lower efficiency

Texas Instruments

High Efficiency Buck-Boost Converter

- > 94% efficiency over battery operating voltage range
- Much higher efficiency than SEPIC or traditional buck-boost
- 25µA quiescent current
- Smooth transition between Buck and Boost mode
- 3x3mm QFN-10

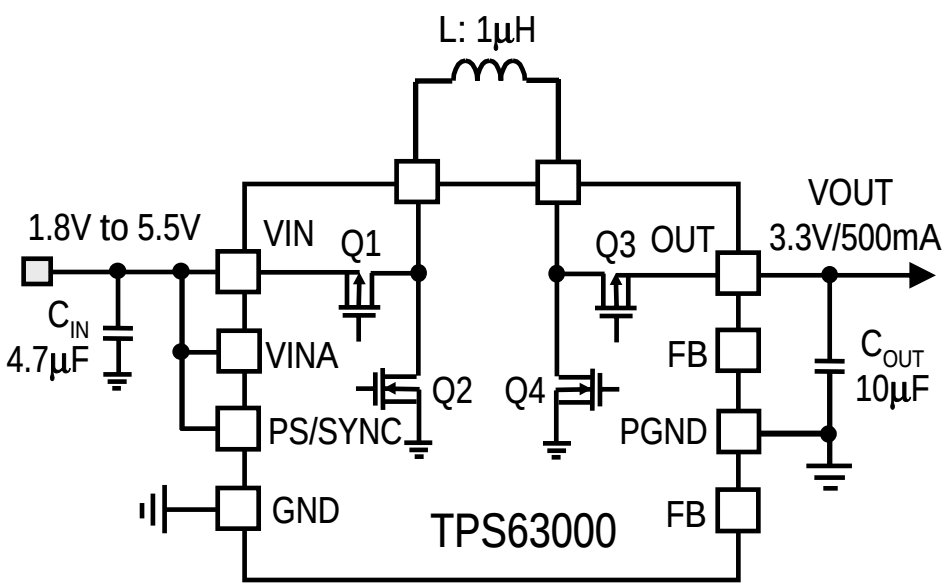

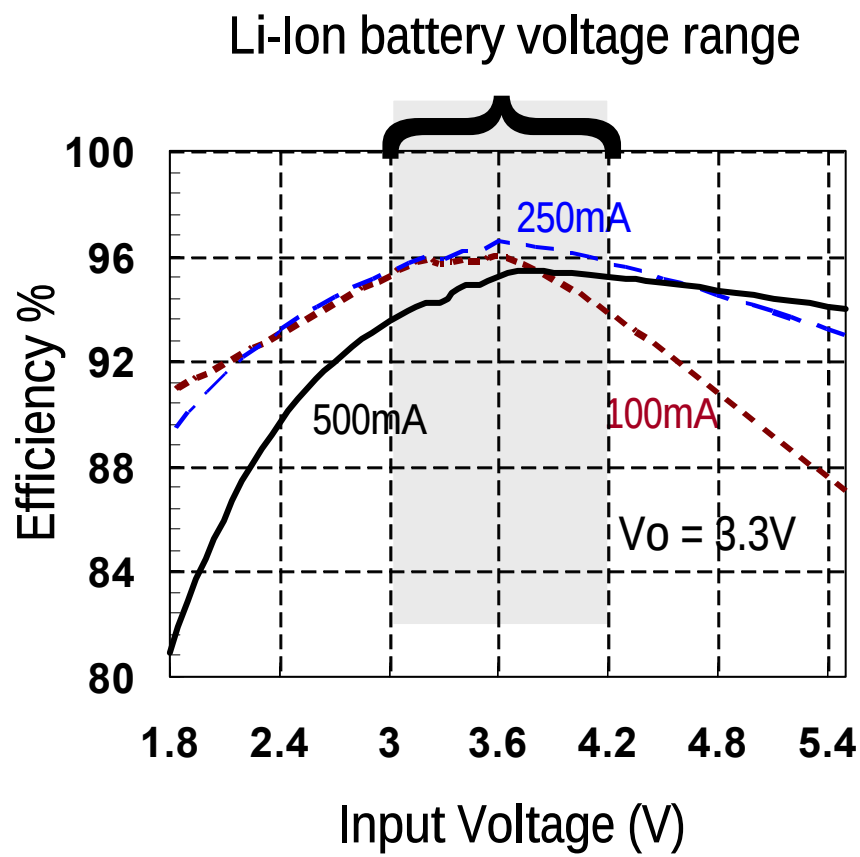

4-Switch Single Inductor Buck-Boost

TPS63000 / 01 / 02 1.8 … 5.5VIN, Adj. / 3.3 / 5.0 VOUT, 1.6A min I_{SWITCH}, 1.4MHz; QFN10

TPS63030 / 01 1.8 … 5.5VIN, Adj. / 3.3 VOUT, 0.9A min I_{SWITCH}, 2.4MHz; QFN10

- VIN can be smaller, larger or equal to VOUT
- Synchronizable up to
  - 1.8 MHz / TPS630xx
  - 2.6 MHz / TPS6303x
- PFM Power-save Mode for Improved Efficiency at Low Output Currents.
- Forced PWM possible
- 50-uA Quiescent Current

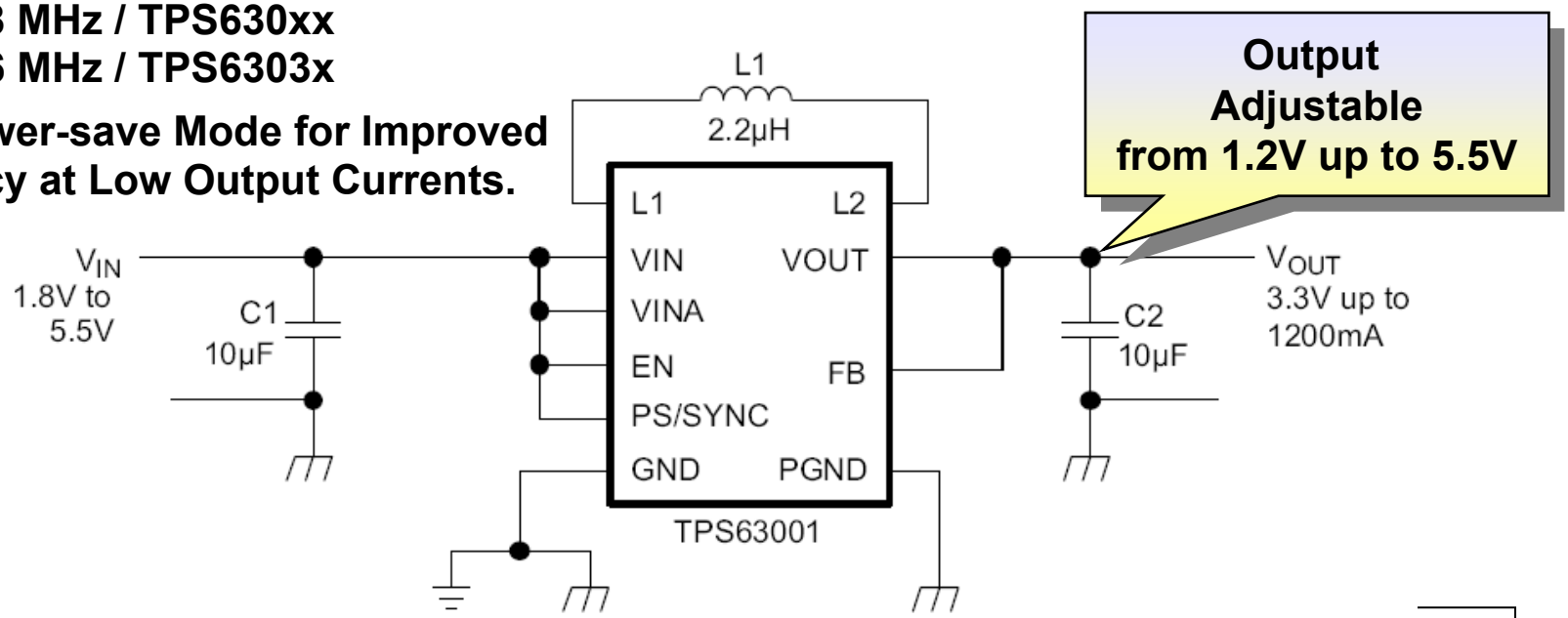

Texas Instruments

4-Switch Single Inductor Buck-Boost

TPS63010	**2.0 … 5.5VIN, Adj. VOUT (1.2 – 5.5V), 2.0A min I_{SWITCH}, 2.4MHz; BGA20**
TPS63011	**2.0 … 5.5VIN, 3.3 / 2.8 VOUT, 2.0A min I_{SWITCH}, 2.4MHz; BGA20**
TPS63012	**2.0 … 5.5VIN, 3.4 / 2.9 VOUT, 2.0A min I_{SWITCH}, 2.4MHz; BGA20**

- VIN can be smaller, larger or equal to VOUT
- Synchronizable up to 3.0MHz
- PFM Power-save Mode for Improved Efficiency at Low Output Currents.
- Forced PWM possible
- 50-uA Quiescent Current

2 – 5.5 V Input

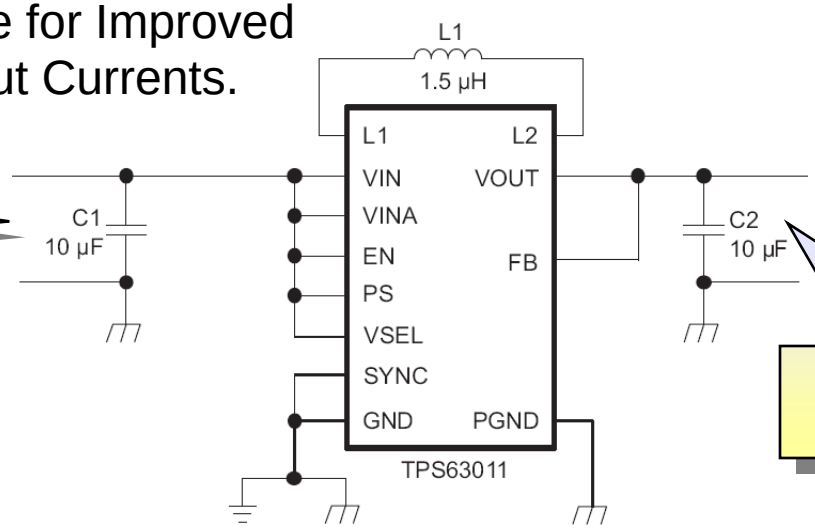

Adjustable or Selectable VOUT

Texas Instruments

Highly Integrated Boost and Inverter

TPS65130 1.25MHz Boost + Inverter w/ 700mA minimum switch current

TPS65131 1.25MHz Boost + Inverter w/ 1800mA minimum switch current

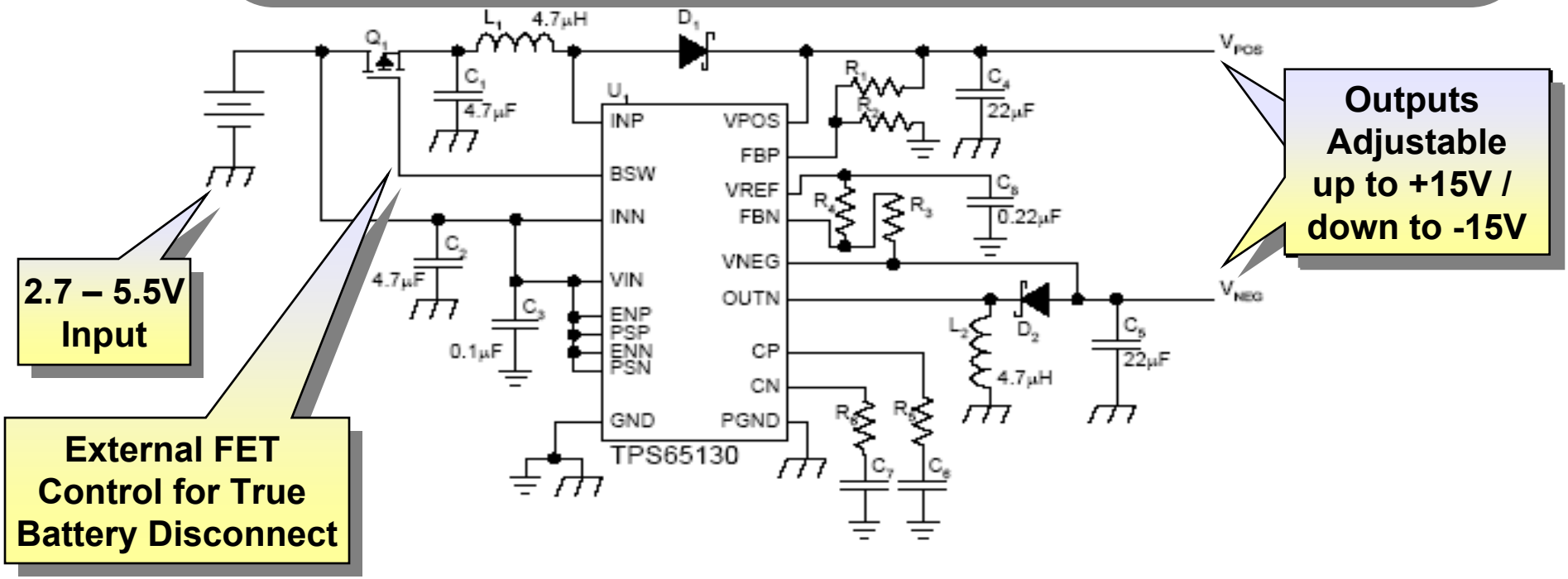

- Optimized for low output ripple (OLED Display)
- OverVoltage Protection for both outputs
- Independent Enable and forced PWM mode
- 4 x 4 mm QFN Package

TPS54140 /TPS54160 for positive / negative outputs

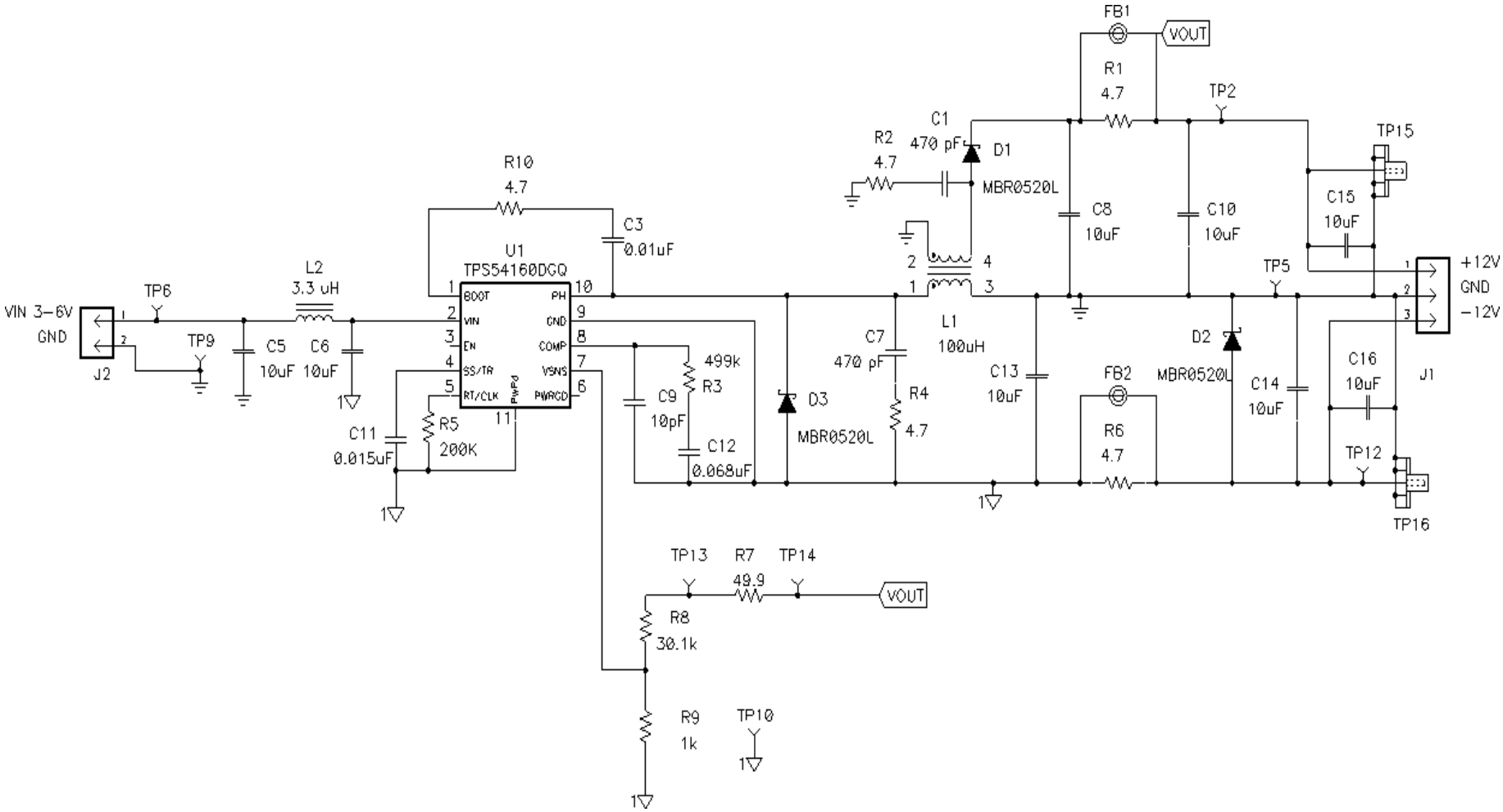

Texas Instruments

Smallest & Highest Integrated Boost and Inverter Solution

TPS65136 Single Inductor, Multiple Output (SIMO) Converter

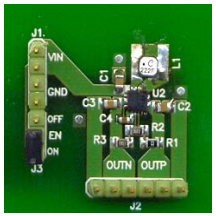

2.3 – 5.5V Input

+4.6V, fixed and +/-1% accurate positive output

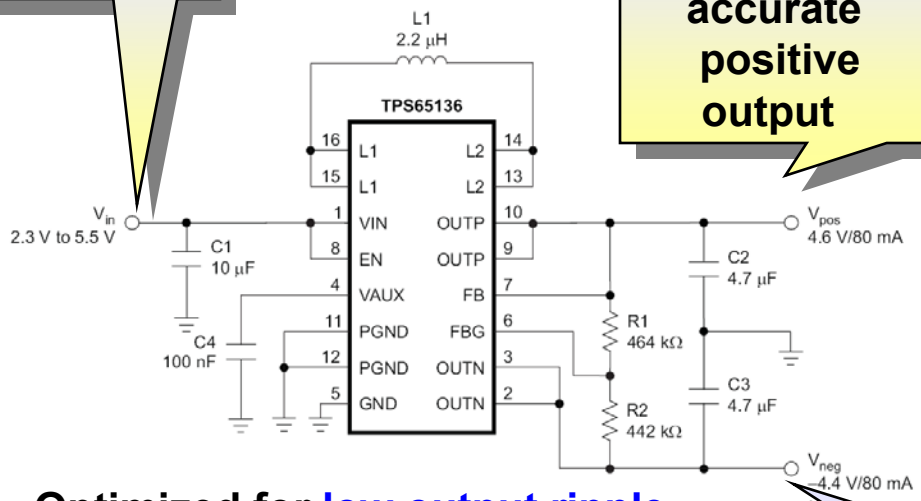

-2.5 … -6V adjustable negative output

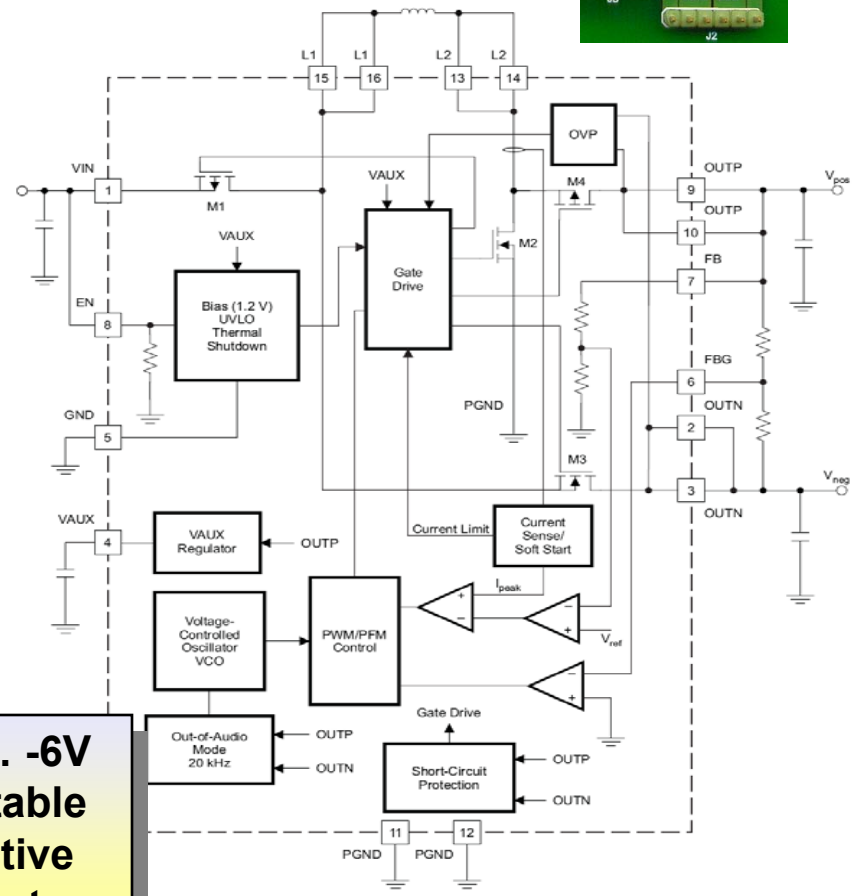

Functional Block Diagram

- Optimized for low output ripple (OLED Display)
- 750-mW Output Power @ Vin = 2.9 V
- Excellent Line Regulation
- Power-Save Mode w/ OOA
- 3 x 3 mm QFN Package

Texas Instruments

1.1A Synchronous Boost Converter with Integrated USB Switch

TPS2500

USB Enable

Output +5.1V / max 1.1A (total, including USB-Power)

1.8 – 5.3V Input (2.2V min for Start-Up)

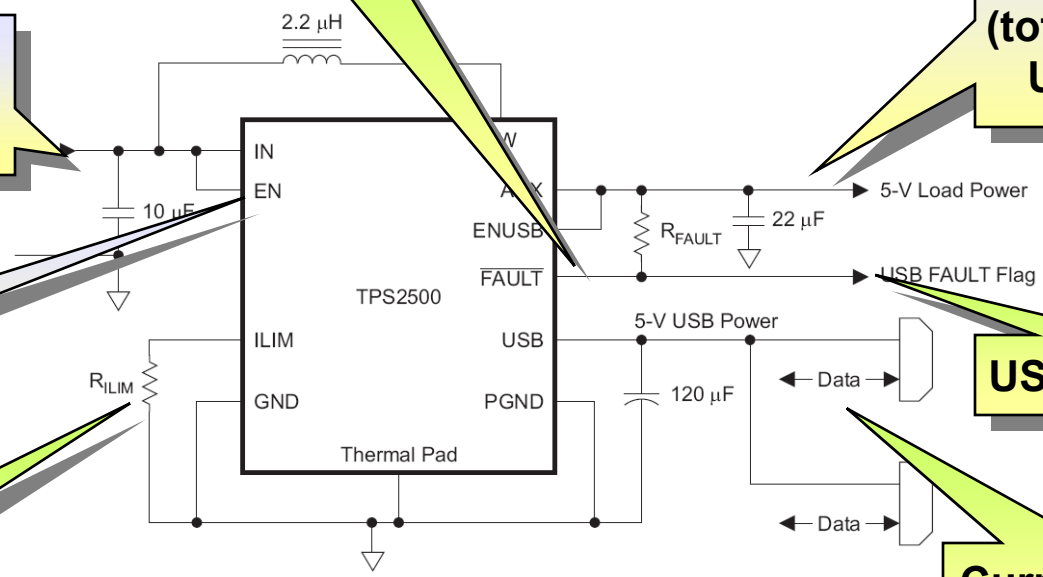

BOOST Converter Enable

USB FAULT Flag

Adjustable USB Current Limit 0.1 – 1.1A

Current Limited USB Switch

- **Small 3-mm × 3-mm SON-10 Package**
- **Accurate 15% Current Limit for USB**
- **Powers up to Two USB Ports**

Agenda

- General Thoughts
- Linear Regulators
- Switch Mode Regulators
- Buck Converter Solutions
- Boost Converter Solutions
- Buck-Boost & Other Converter Solutions
- **Power Multiplexing**
- Voltage Supervision

Low VIN Power ORing / Multiplexer

TPS2110 (A)	0.31 … 0.75A / 120mΩ / M / A
TPS2111 (A)	0.63 … 1.25A / 84mΩ / M / A
TPS2112 (A)	0.31 … 0.75A / 120mΩ / A / SO
TPS2113 (A)	0.63 … 1.25A / 84mΩ / A / SO
TPS2114 (A)	0.31 … 0.75A / 120mΩ / M / A / SO
TPS2115 (A)	0.63 … 1.25A / 84mΩ / M / A / SO

M – Manual Switch - Over
A – Automatic Switch - Over
SO – Switch Status Output

"A"-Devices with reduced Switch-Over Prop Delay (40µs vs. 170µs)

- Low RDS(on)
- Manual or Autoswitching
- Reverse & Cross-Conduction Blocking
- Controlled Transition Minimizes Output Hold-up Capacitance
- 0.5 µA Standby Current
- 55 µA Operating Current

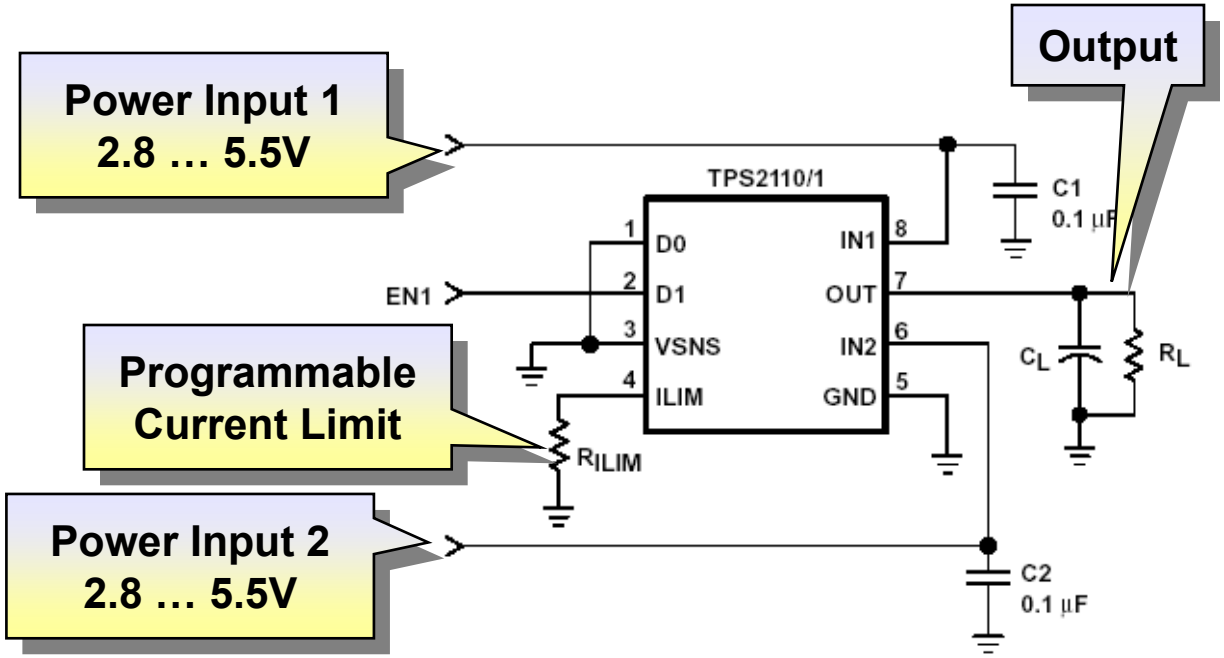

Texas Instruments

Agenda

- General Thoughts
- Linear Regulators
- Switch Mode Regulators
- Buck Converter Solutions
- Boost Converter Solutions
- Buck-Boost & Other Converter Solutions
- Power Multiplexing
- **Voltage Supervision**

Voltage Supervisors & Sequencers

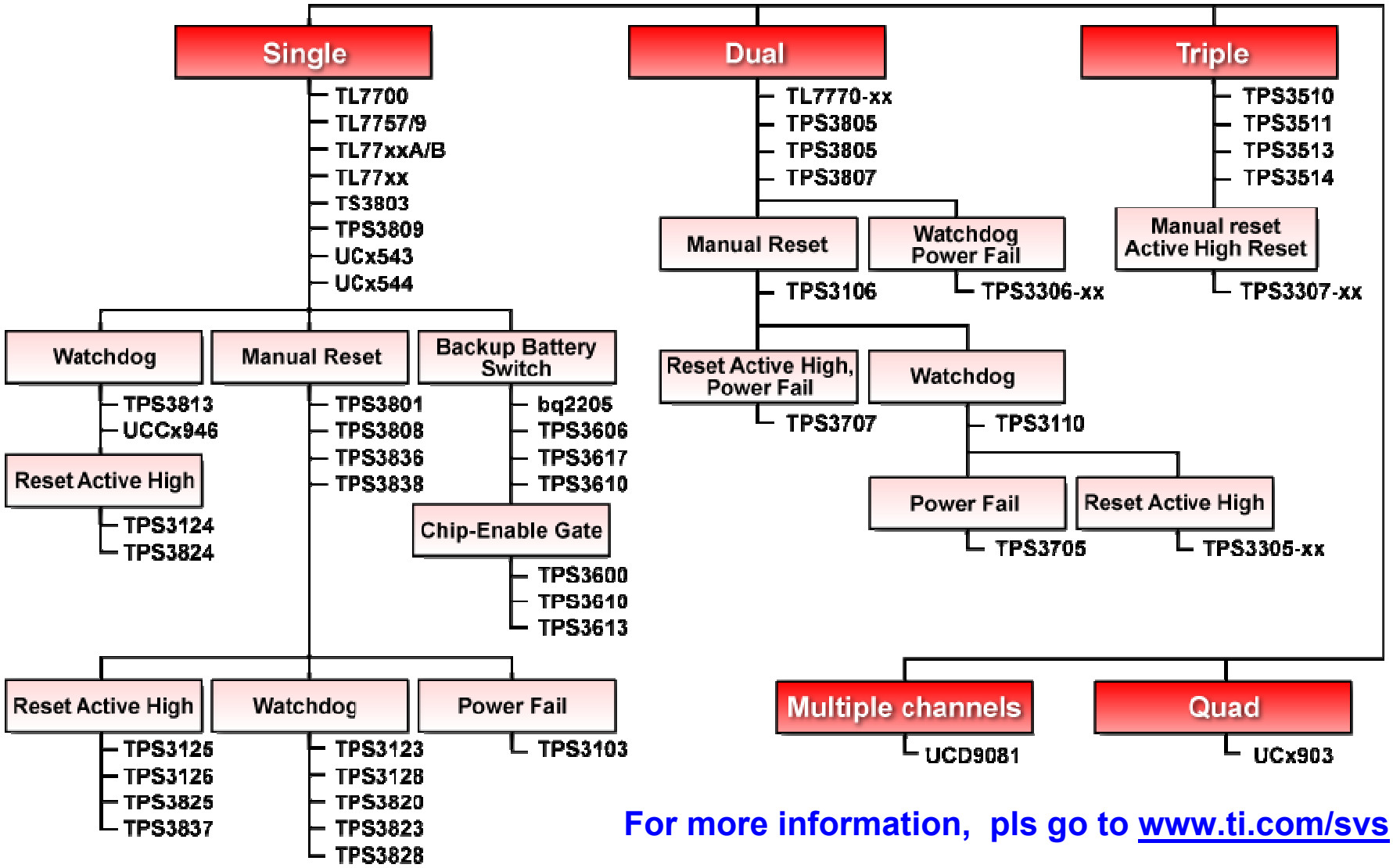

For more information, pls go to www.ti.com/svs

High Precision, Low Power Programmable Delay Supervisor

TPS3808 Active Low Open Drain; 3x3mm² SOT23 & 2x2mm² QFN

SOT23 (TOP VIEW)

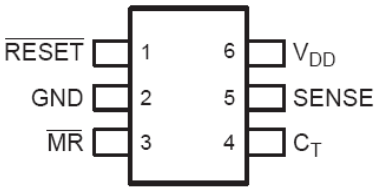

2mm x 2mm QFN (TOP VIEW)

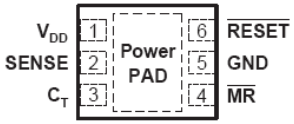

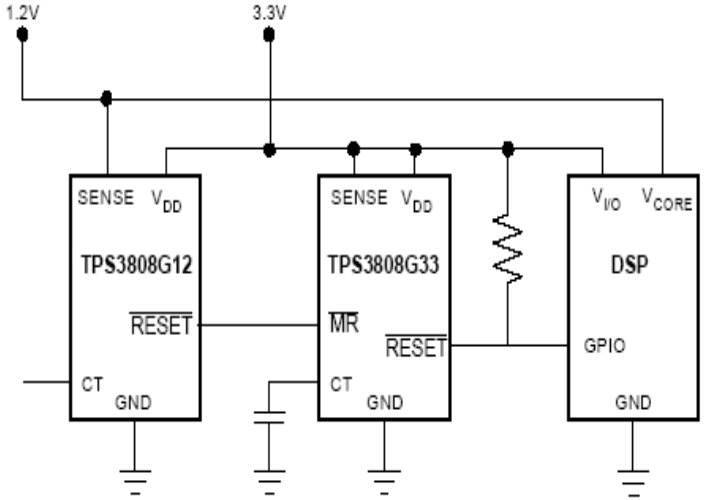

- Adjustable Delay Time: 1.25ms to 10s
- Very High Threshold Accuracy: 0.5%
- Very Low Quiescent Current: 2.4µA typ
- Separate VDD and SENSE pins
- Fixed Thresholds for 0.9V to 5V rails and Adjustable Down to 0.405V
- Manual Reset Input
- -40°C to 125°C

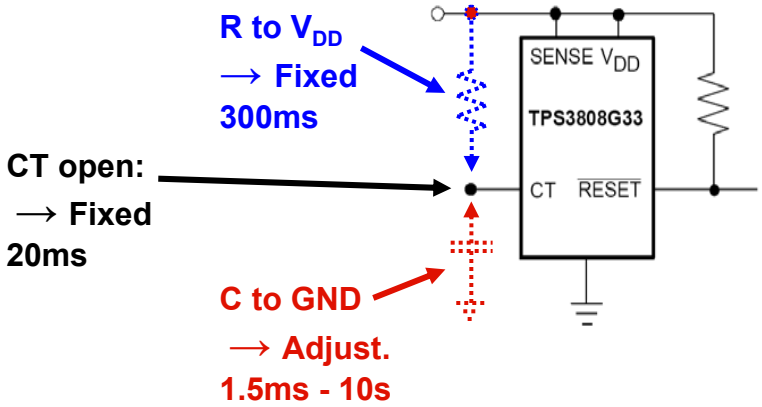

Texas Instruments

NanoPower Supervisor

TPS3836	**Active Low Push/Pull**
TPS3837	**Active High Push/Pull**
TPS3838	**Active Low Open Drain**

- 220 nA (typ.) Supply Current
- 10 ms or 200 ms Delay Time
- 1.8V, 2.5V, 3V, 3.3V Versions
- Manual Reset Input
- 5-pin SOT-23 package
- AEC-Q100 Versions (125C)

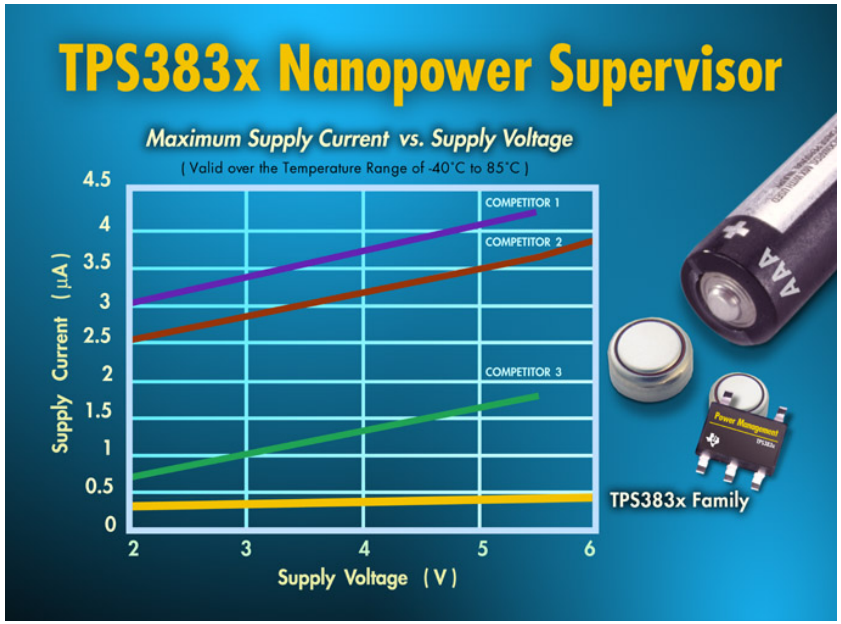

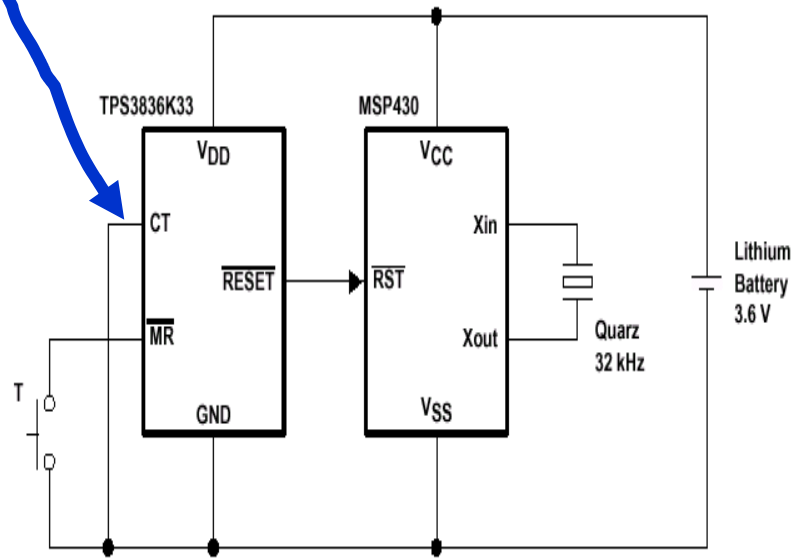

Texas Instruments

Battery Backup Supervisors

TPS36xx Battery Backup SVS

Complex Example

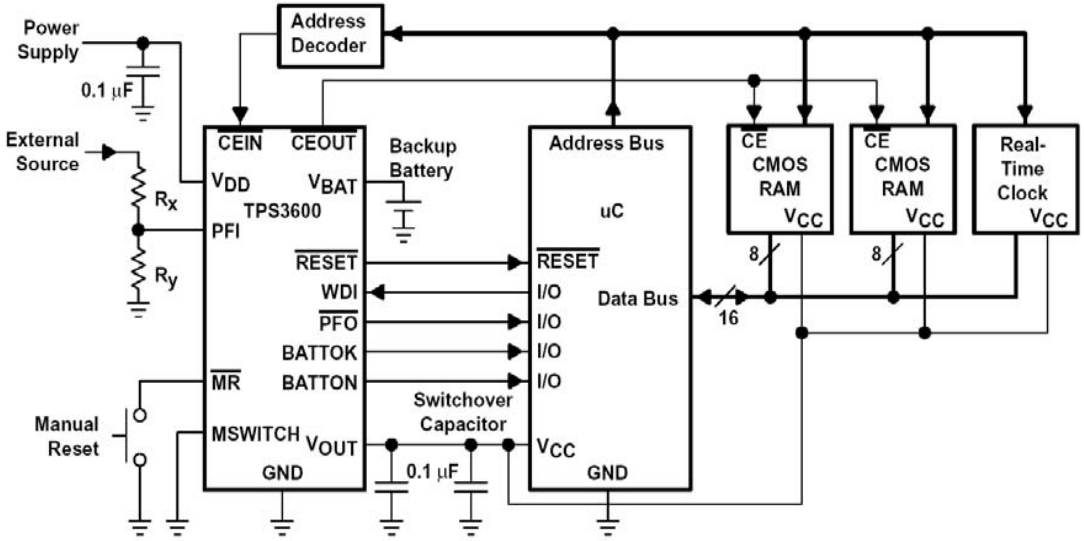

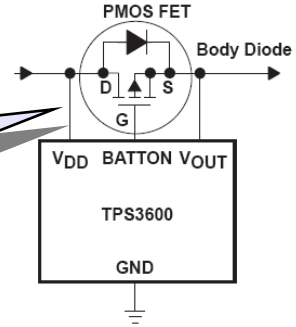

Use of BATTON signal and external P-Channel FET to increase power path current from VDD to VOUT

Less Complex Example

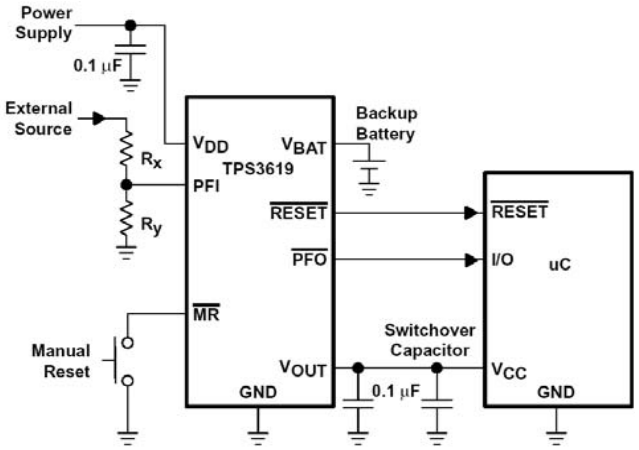

Texas Instruments

Battery Backup Supervisors

TPS36xx Battery Backup SVS

	VOUT Switch Current (mA)	RDS(ON) VDD to VOUT (Ω) / @ VDD (V)	RDS(ON) VBAT	Max VDD Supply Current	Max VDD Supply Current - BAT ON (µA)	Max VBAT Supply Current - BAT ON (µA)	MaxVBAT Supply Current - VDD ON (µA)	Additional Manual Battery Switching	Battery OK Status Pin	Battery ON Status Pin	Battery Freshness Seal	Chip-Enable Gating	1.8V SVS	2.0V SVS	2.5V SVS	3.3V SVS	5.0V SVS	Adjustable SVS	Low Line (Early Warning)	Power Fail Comparator (PFI / PFO)	Active Low RESET (100ms Delay)	Active High RESET (100ms Delay)	Manual RESET Input	Watchdog (800ms Time-Out)	Package
TPS3600	200	1 / 3.3	1	40	8	40	0.1	✓	✓	✓	✓	✓		✓	✓	✓	✓			✓	✓		✓	✓	TSSOP14
TPS3606	200	1 / 3.3	1	40	8	40	0.1	✓			✓					✓				✓	✓		✓	✓	MSOP10
TPS3610	300	0.6 / 5.0	8	40	40	0.5	0.1	✓	✓	✓	✓	✓	✓				✓		✓	✓	✓			✓	TSSOP14
TPS3613	300	0.6 / 5.0	8	40	40	0.5	0.1					✓						✓			✓	✓	✓		MSOP10
TPS3617	300	0.6 / 5.0	8	40	40	0.5	0.1				✓						✓			✓	✓			✓	MSOP8
TPS3618	300	0.6 / 5.0	8	40	40	0.5	0.1										✓			✓	✓			✓	MSOP8
TPS3619	300	0.6 / 5.0	8	40	40	0.5	0.1				✓					✓	✓			✓	✓		✓		MSOP8
TPS3620	300	0.6 / 5.0	8	40	40	0.5	0.1									✓	✓			✓	✓		✓		MSOP8

Summary

- General Thoughts
- Linear Regulators
- Switch Mode Regulators
- Buck Converter Solutions
- Boost Converter Solutions
- Buck-Boost & Other Converter Solutions
- Power Multiplexing
- Voltage Supervision

Thank You !