# Battery Management – monitoring and charging techniques

Texas Instruments

# Some battery basics

# Rechargeable Battery

- Lead Acid / SLA
  - ↑ 100 years of fine service!
  - ↓ Far too heavy & poisonous

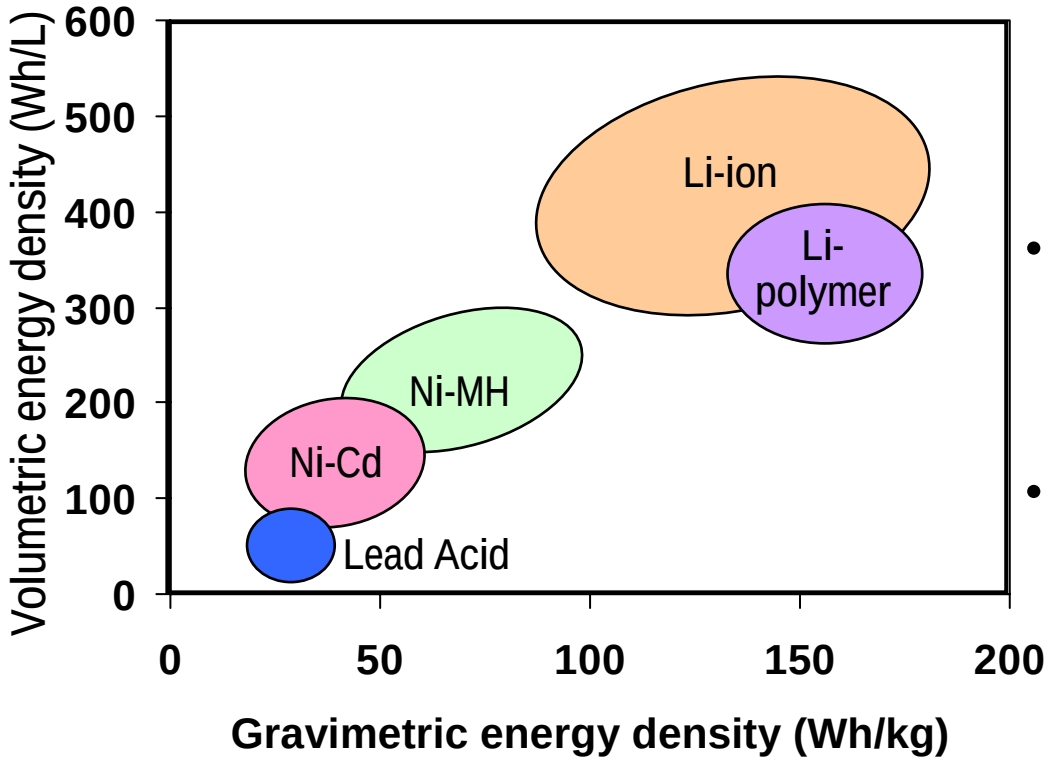


- Reusable Alkaline
  - ↑ High capacity on 1st Dsg
  - ↓ 2nd discharge is only 60%, high internal resistance
- NiCd
  - ↑ High cycle count, low cost
  - ↓ Toxic heavy metal, explosive hydrogen
- NiMH
  - ↑ 2X improvement in capacity over NiCd
  - ↓ High self-discharge
- Lithium Ion
  - ↑ Energy density, low self-discharge
  - ↓ Safety concerns

# Battery chemical capacity - $Q_{max}$

## "How long is it going to last?"

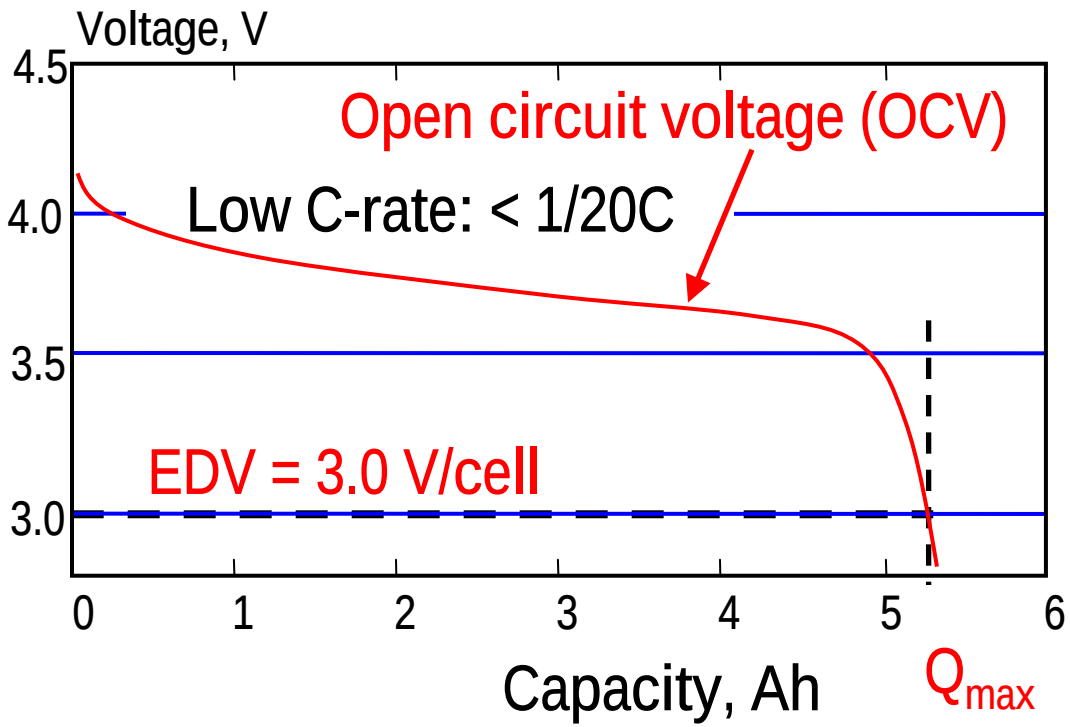


C-rate:
Current to discharge a fully charged Battery to EDV in one hour

Example:
2200-mAh battery,
1C discharge rate: 2200 mA, 1 hr
0.5C rate: 1100 mA, ~2 hrs

- OCV is the voltage curve when discharging a fully charged battery at a very low C-rate: <1/20C
- Battery capacity (Qmax) is defined as the amount of charge which can be extracted from the fully charged cell until its voltage drops below end of discharge voltage (EDV) at a low C-rate.
- EDV is the minimal voltage acceptable for the application or for battery chemistry, whichever is higher.

# How much capacity is really available?

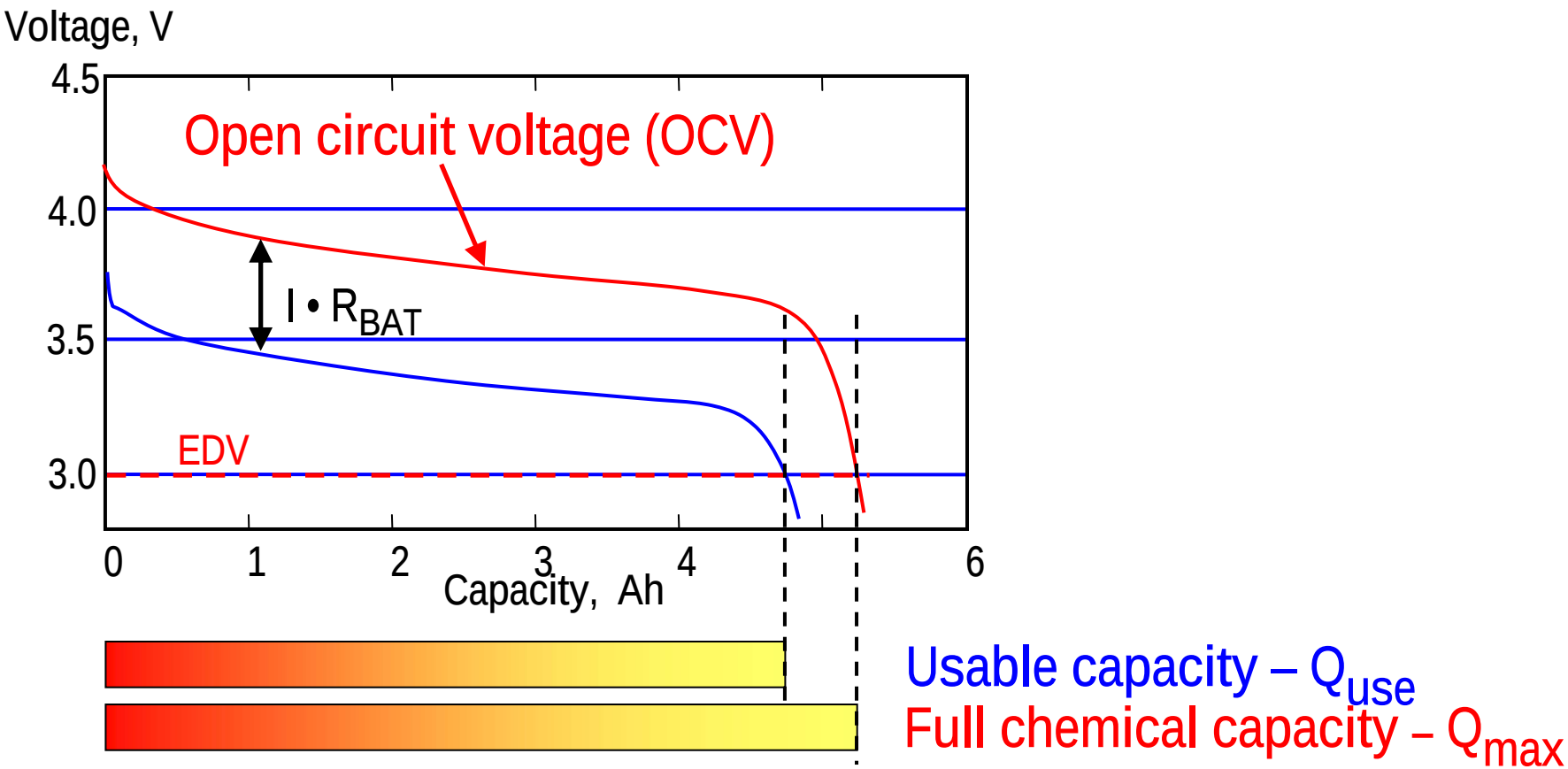


- External battery voltage (blue curve) $V = V_{0CV} - I \cdot R_{BAT}$
- Higher C-rate → EDV is reached earlier (higher $I \cdot R_{BAT}$)

# How does battery impedance and capacity vary when aging?

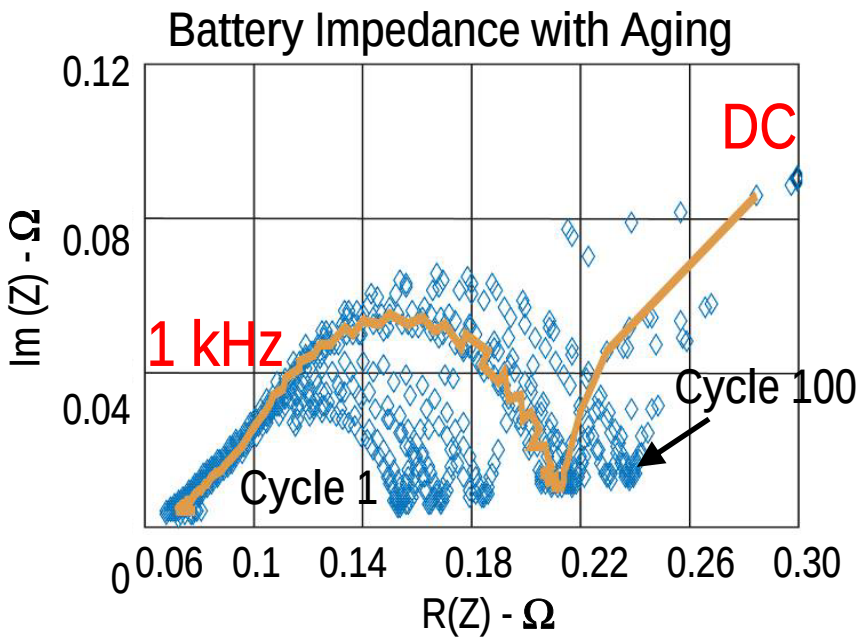


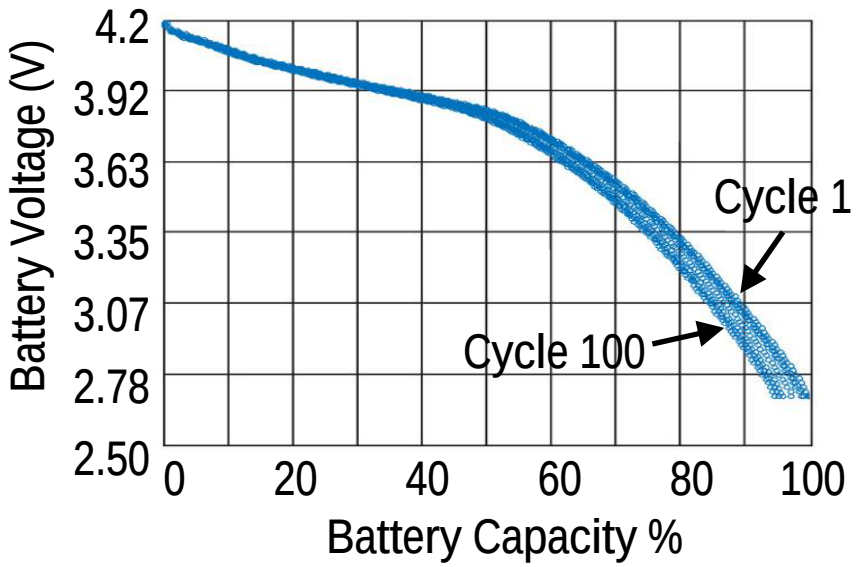


- **Battery impedance increase with aging**
- **Impedance almost doubles after 100 cycles**
- **Chemical capacity reduces by 3 to 5% after 100 cycles**

# Impedance is dependent on temperature and State-of-Charge (SOC)

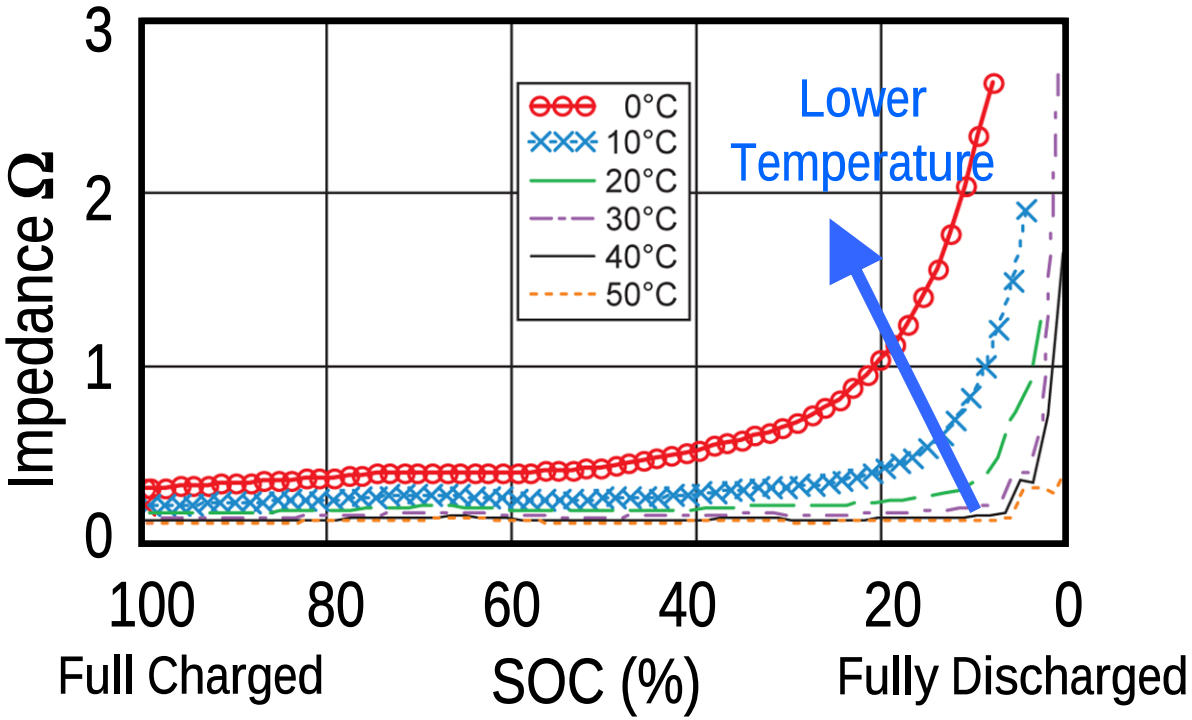


- **Impedance = f(Temperature, SOC, and Aging)**
- **SOC: State of Charge**

# Effect of impedance increase on runtime

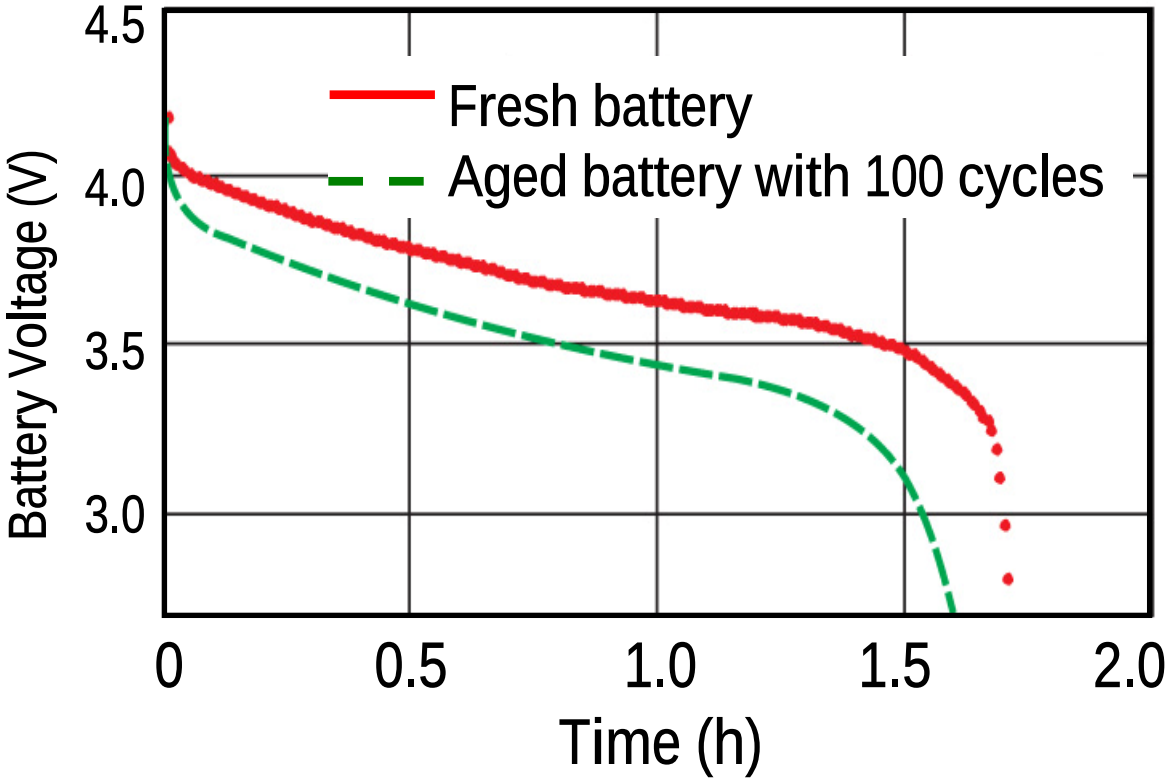


- **Change of no-load capacity during 100 cycles < 1%**
- **Also after 100 cycles - impedance doubles**
- **Double impedance results in 7% decrease in runtime**

# Charge Voltage Affects Battery Service Life

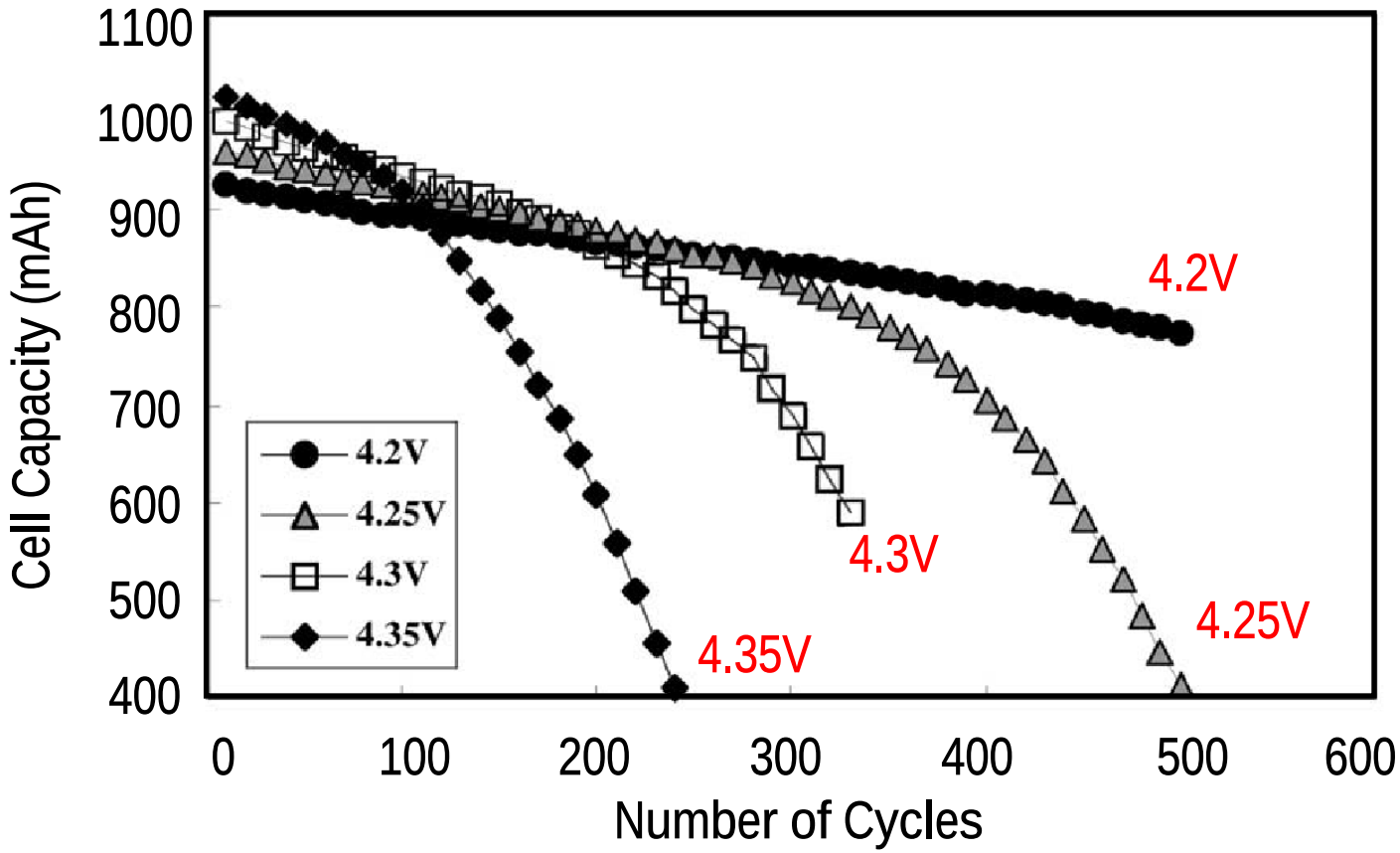


- **The higher the voltage, the higher the initial capacity**
- **Over charging shortens battery cycle life**

"Factors that affect cycle-life and possible degradation mechanisms of a Li-Ion cell based on LiCoO2", Journal of Power Sources 111 (2002) 130-136

# Shelf-life, degradation without cycling

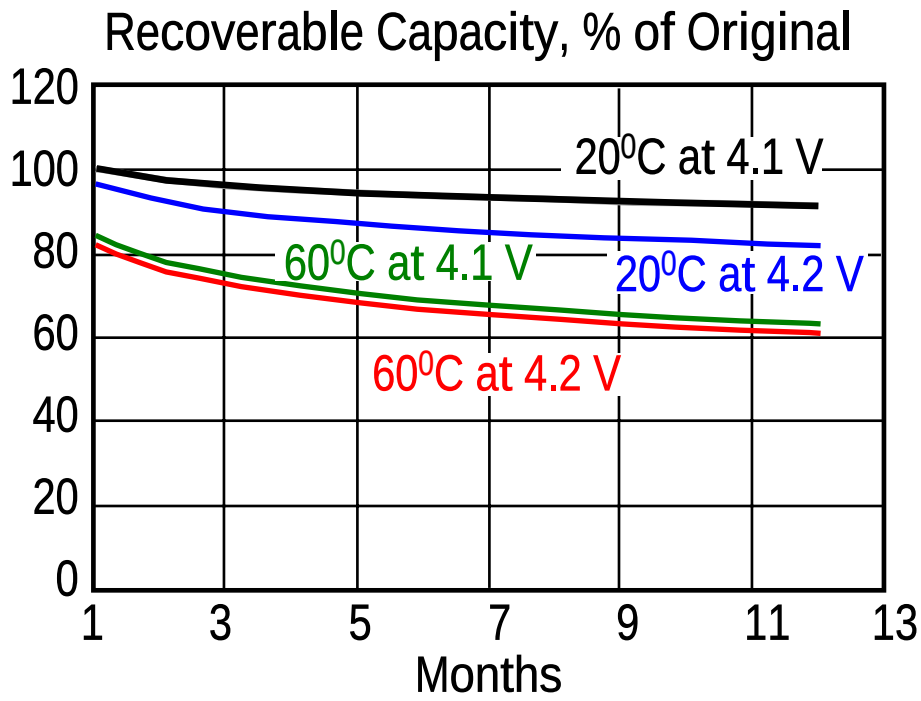


- If battery is sitting on the shelf too long, capacity will decrease
- Degradation accelerates at higher temperatures and voltages
- Depending on chemistry there are specific recommendations on best storage conditions

M. Broussely et al at Journal of Power Sources 97-98 (2001)

# Charge Current versus Battery Degradation

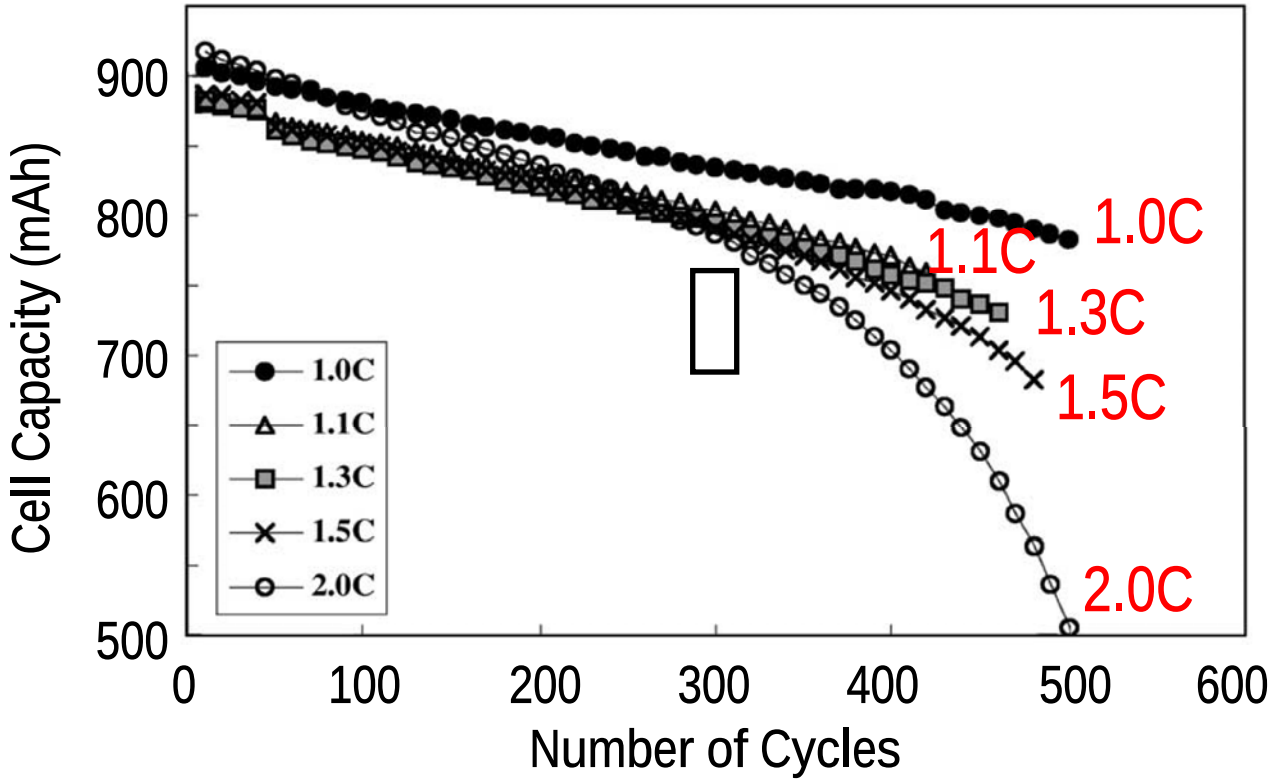


- limit charge current to ~ 1C rate to prevent overheating and resulting accelerated degradation.
- Some new cells higher-rate……

"Factors that affect cycle-life and possible degradation mechanisms of a Li-Ion cell based on LiCoO2", Journal of Power Sources 111 (2002) 130-136

# Latest Developments – $LiMn_2O_4$

- Standard "Li-Ion" is **$LiCoO_2$**
  - Only 2 dimensions of freedom
  - High capacity
  - Limited power

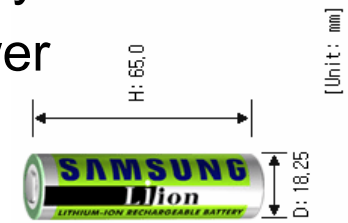


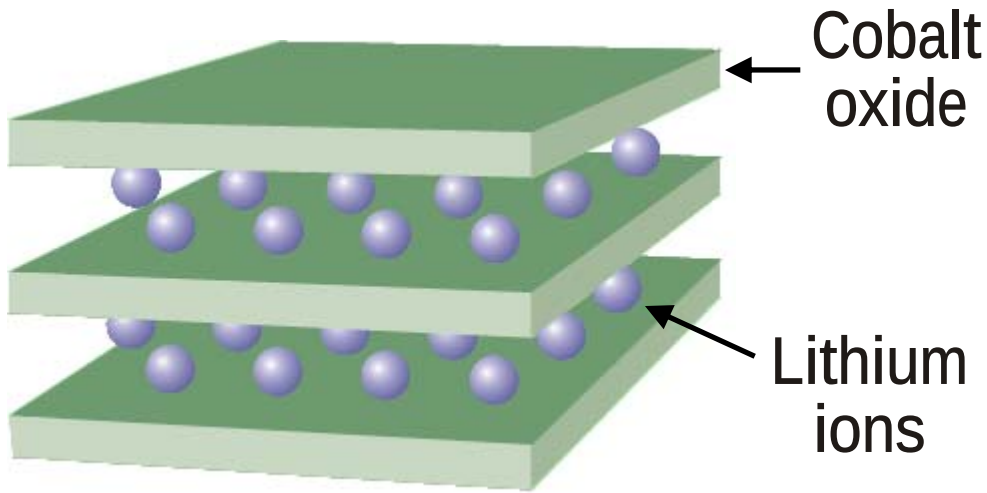


- **$LiMn_2O_4$**
  - Forms a 3D spinel structure
  - Shorter path for ions to travel
  - 20-30A continuous in 18650
  - 50A for 1 second in 18650
  - 80A for 10 second in 26700

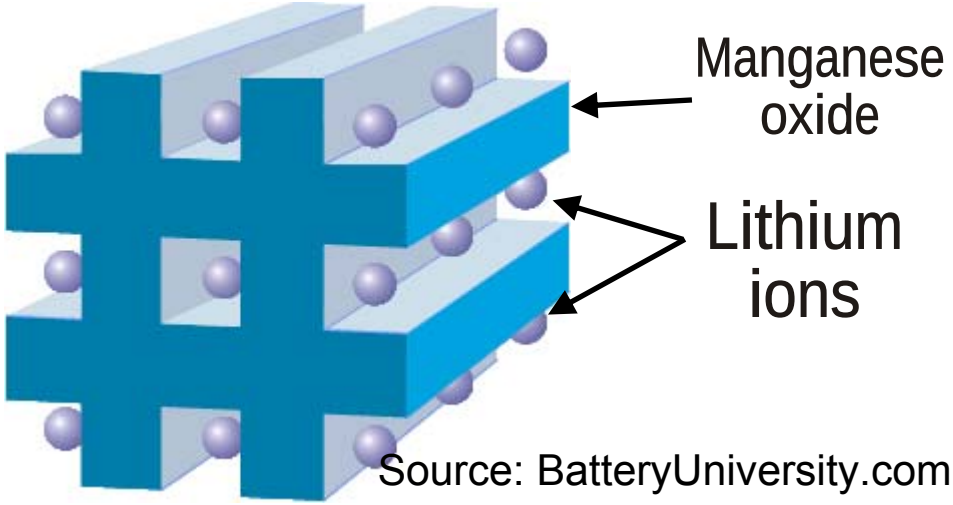


Source: BatteryUniversity.com

# Latest Developments – $LiFePO_4$

- $LiFePO_4$
  - Originally developed at UT Austin in 1997
  - Refined at MIT in 2001 - conductivity breakthrough with nanoscopic carbon
  - Life cycle claims are in thousands
  - Mass produced by A123 Systems, LG Chemical, K2 Energy, Valence Technology and others
  - Black & Decker, DeWalt, General Motors, Daimler, Cessna, BAE systems...
  - "...Its the next great paradigm shift in our industry..." Bob Lutz - GM

| Chemistry | Rated Voltage (V) | Charge-Terminate Voltage (V) | Discharge C Rate | Energy Density (Wh/kg) | Characteristics and Applications |
|---|---|---|---|---|---|
| Cobalt | 3.6 | 4.2 | 1C | 160 | Laptops, cell phones, digital cameras |
| Manganese | 3.7~3.8 | 4.1~4.3 | 10C | 120 | Power tools, medical equipment |
| Nickel-cobalt manganese | 3.7 | 4.2 | 5C | 100~130 | Power tools, medical equipment |
| Li Iron Phosphate | 3.2~3.3 | 3.5~3.6 | >20C | 90 | Power tools, medical equipment, e-bikes, electric vehicles |

# Safety

- High operating temperature.
  - Accelerates cell degradation
  - Thermal runaway and explosion
- $LiCoO_2$ – cathode reacts with electrolyte at 175 deg C with 4.3V
- Cathode coatings help considerably
- $LiFePO_4$ shows huge improvement! Thermal runaway is > 350 deg C

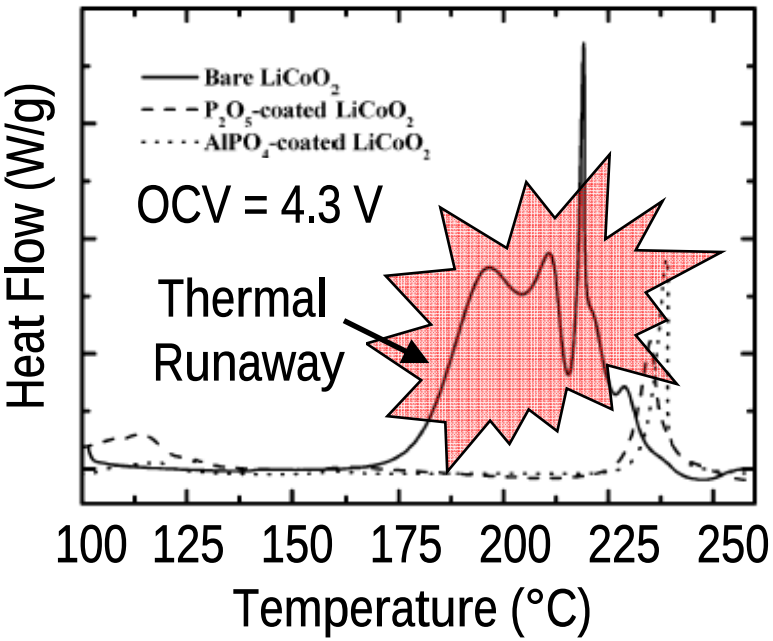

# Cell Safety

- Safety Elements
  - Pressure relief valve
  - PTC element
  - Aluminum or steel case
  - Polyolefin separator
    - **Low melting point (135-165 deg C**
    - **Porosity is lost as melting point is approached**
    - **Stops Li-Ion flow – shuts down the cell**
- Recent incidents traced to metal particles pollutes the cells to create micro shorts

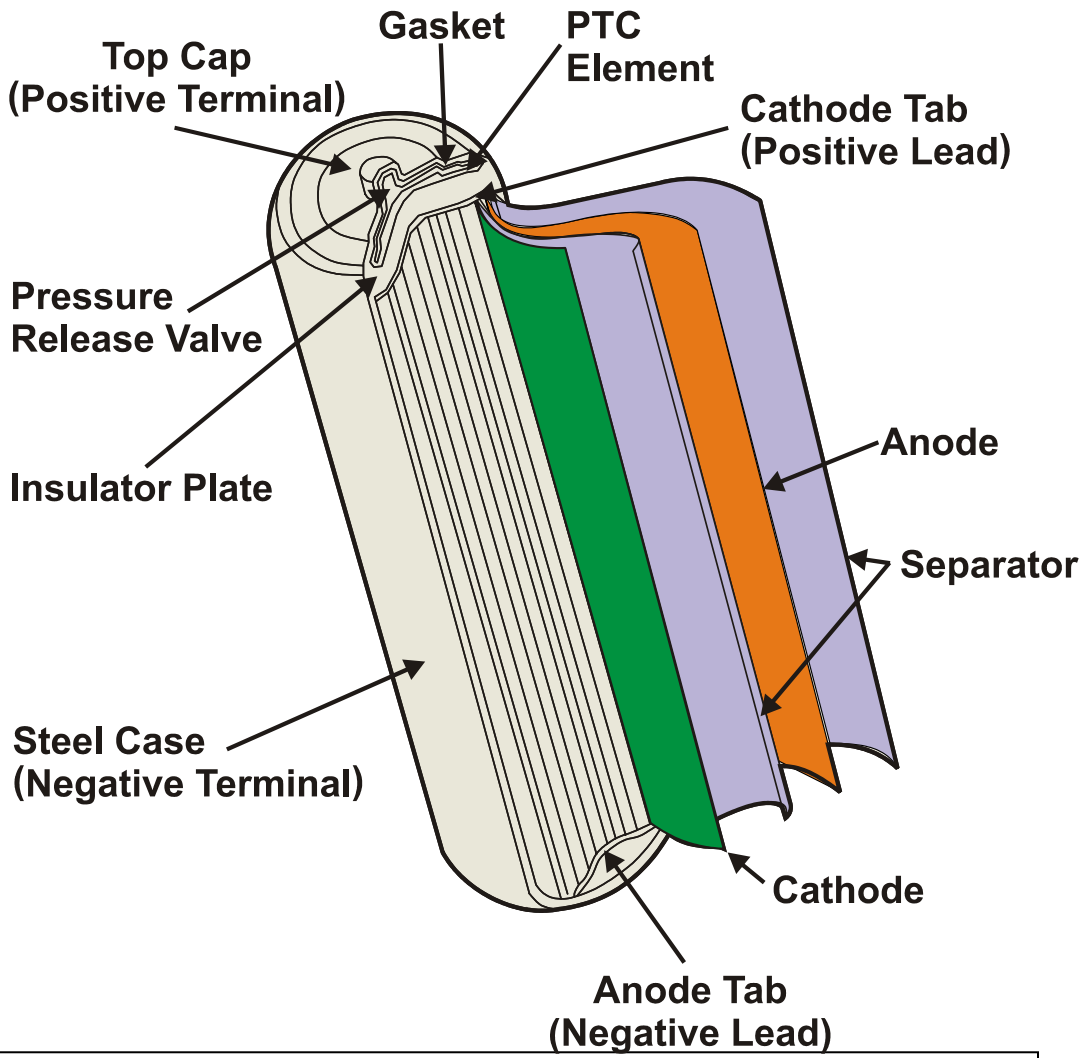

# Pack Electronic Protection Requirements

- The BASIC 5
  - Over Voltage
  - Under Voltage
  - Over Temperature
  - Over Current
  - Cell Imbalance
- Measure everything

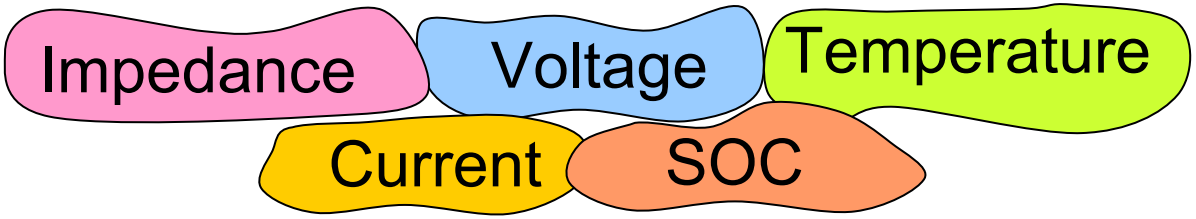

# Basic Battery Pack Electronics

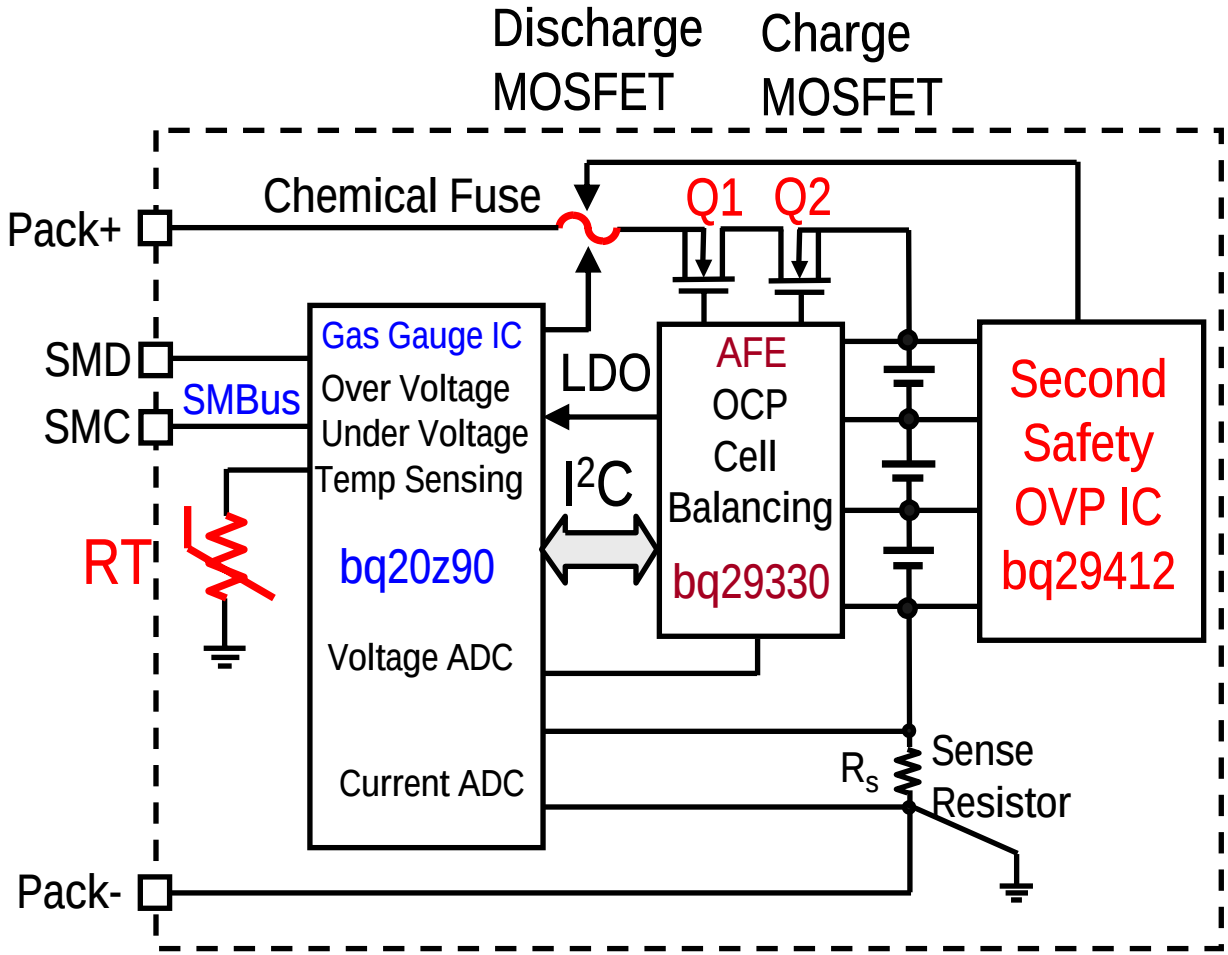


- Measurement: Current, Voltage, and Temperature
- Gas Gauge bq20zxx: Remaining Capacity, Run-Time, Health condition
- Analog Front End (AFE)

# Battery Monitoring / Gas Gauging

# How would you measure capacity ?

- Voltage correlation based
  - e.g. using a MCU
  - e.g. using comparator interfaced with several LED´s
  - e.g. monitor IC inside the pack
  - MCU based with I*R comp. (current measurement needed)
- Coloumb Counting (Current Integration)
- Impedance Track ← Highest accuracy

# Voltage Correlation Based Gas Gauging

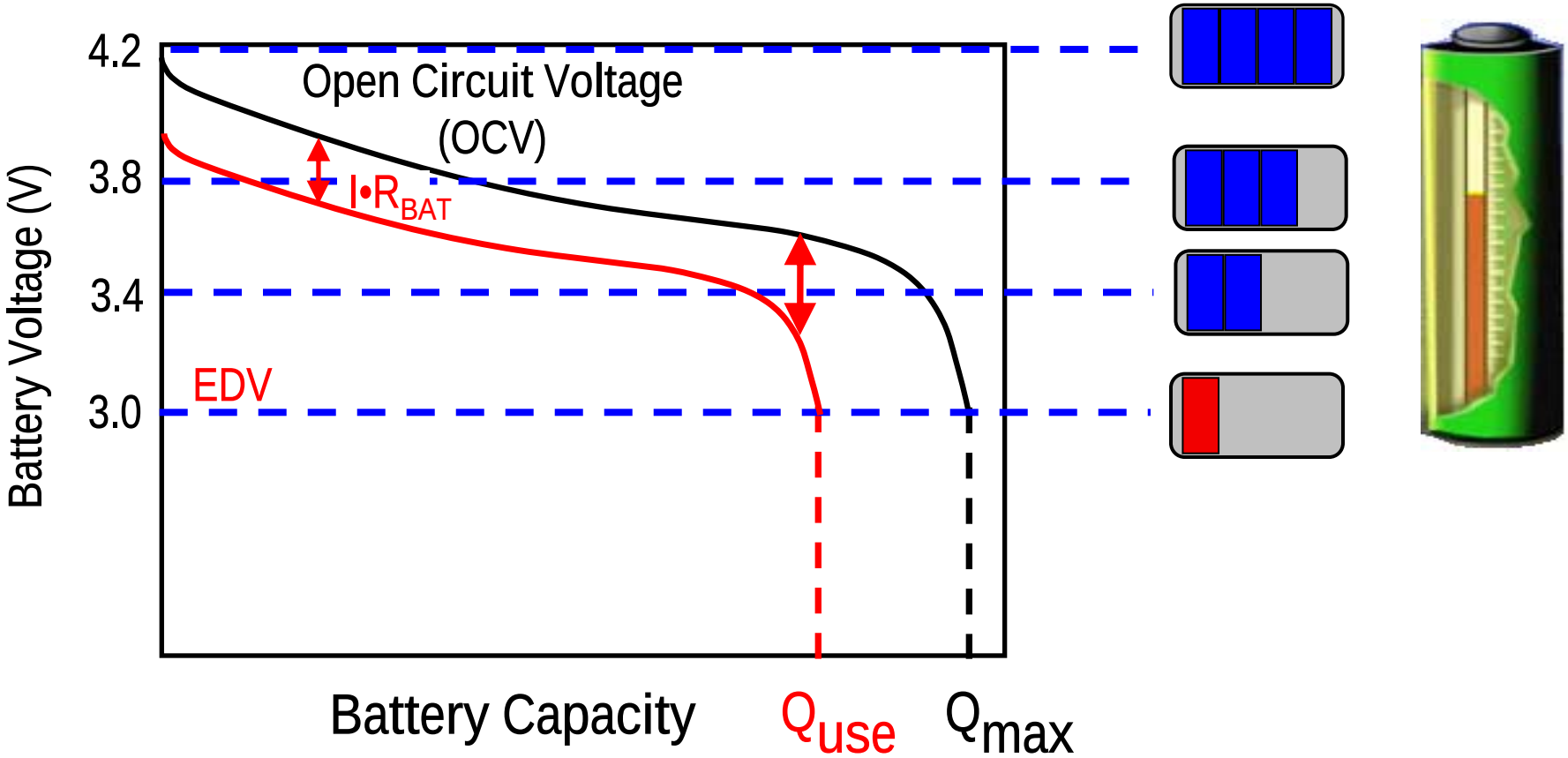


- One bar represents over 50% capacity between 3.8 V and 3.4 V
- Pulsating load causes capacity bar up and down
- Accurate ONLY at very low current $V = V_{OCV} - I \cdot R_{BAT}$?

# Voltage Correlation-Based Fuel Gauging

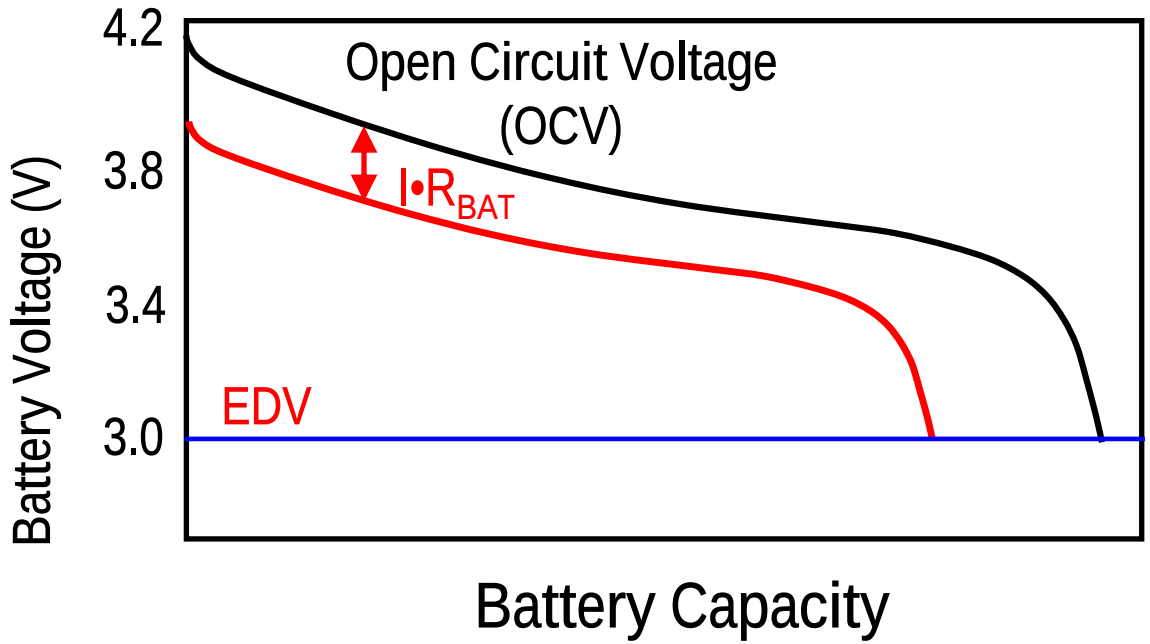


$$V = V_{OCV} - I \cdot R_{BAT}$$

- OCV has a good correlation with SOC without current flow
- <u>IR compensation needed during discharge</u> → need to measure current
- Limited Accuracy: Relaxation, cell to cell variation, and aging

# SOC Error of Voltage-Based Gas Gauging

## Error for a New Cell

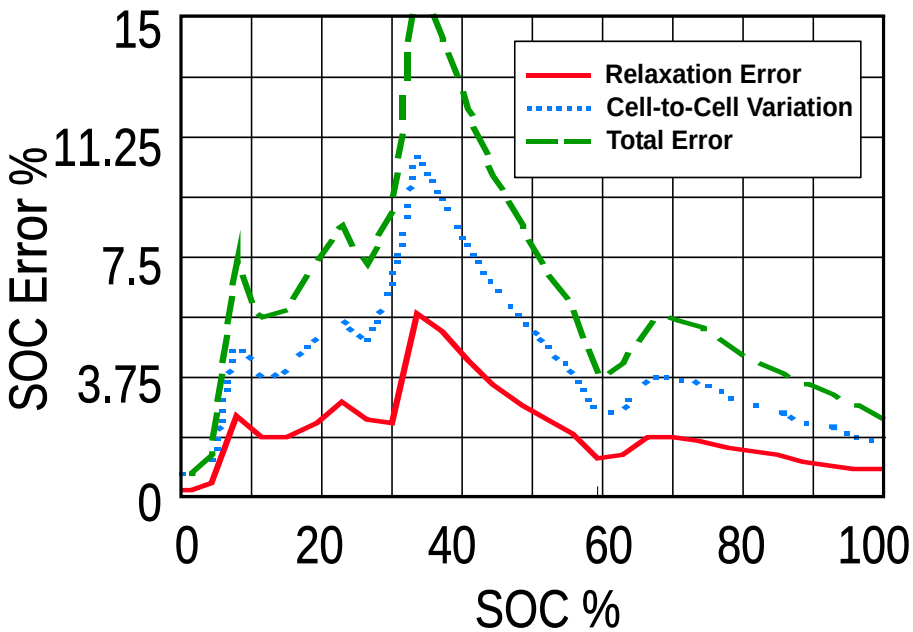


## Error Evolution with Aging

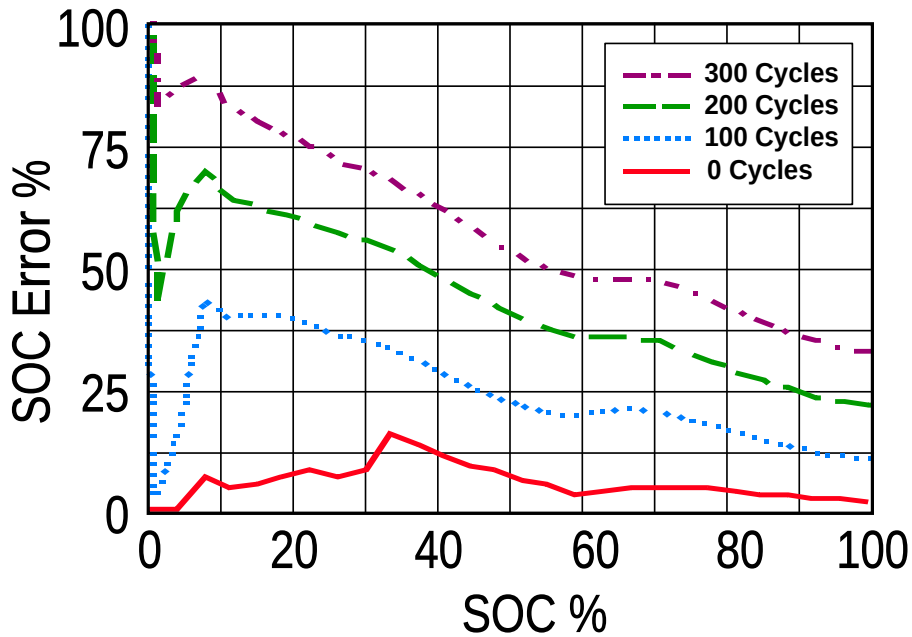


$$V = V_{OCV} - I \cdot R_{BAT} \; ?$$

- 20-mV relaxation measurement error
- 15% cell-to-cell resistance tolerance
- Battery resistance doubles every 100 cycles

# Coulomb Counting Based Gas Gauge

# Current Integration Based Gas Gauging

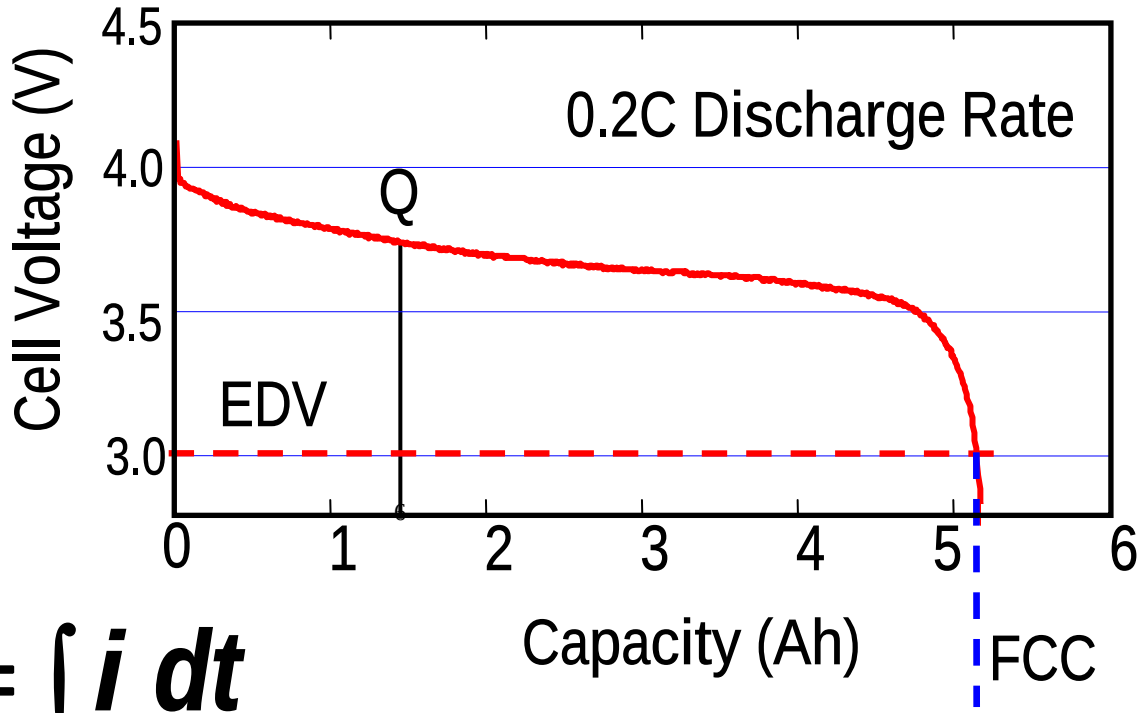


$$Q = \int i\, dt$$

- Capacity is integrated during discharge
- State of charge (SOC) at each moment is (FCC – Q) / FCC
- FCC is updated every time full discharge occurs

Problem - Full discharge until reaching EDV is not allowed for most devices!

# Learning before Fully Discharged

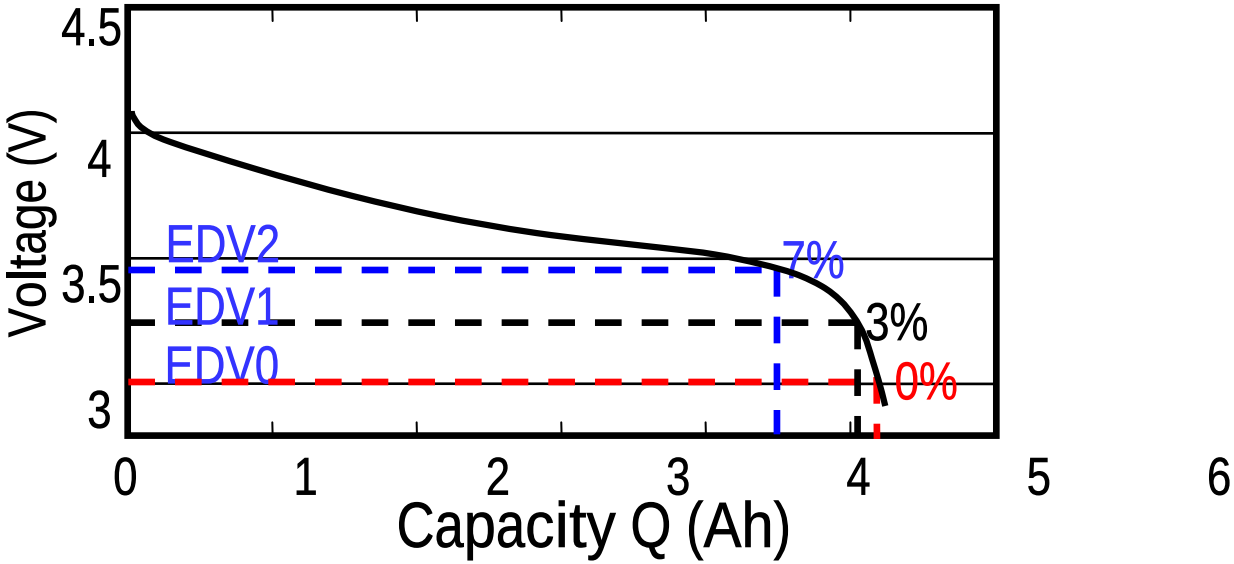


**Full Charge Capacity is determined by a coulomb measurement from the fully charged state (RSOC=100%) to a known near-empty condition**

**Near the bottom, voltage is an excellent method of synchronization (EDV 2) since the discharge curve is sharp.**

**EDV2 = 7% (typical) This is configurable. Learning is based on this voltage threshold**
**EDV1 = 3.25%**
**EDV0 = 0%**

***But, how do you reliably correlate remaining capacity with a measured voltage under varying loads and temperatures?***

# Compensated End of Discharge (CEDV)

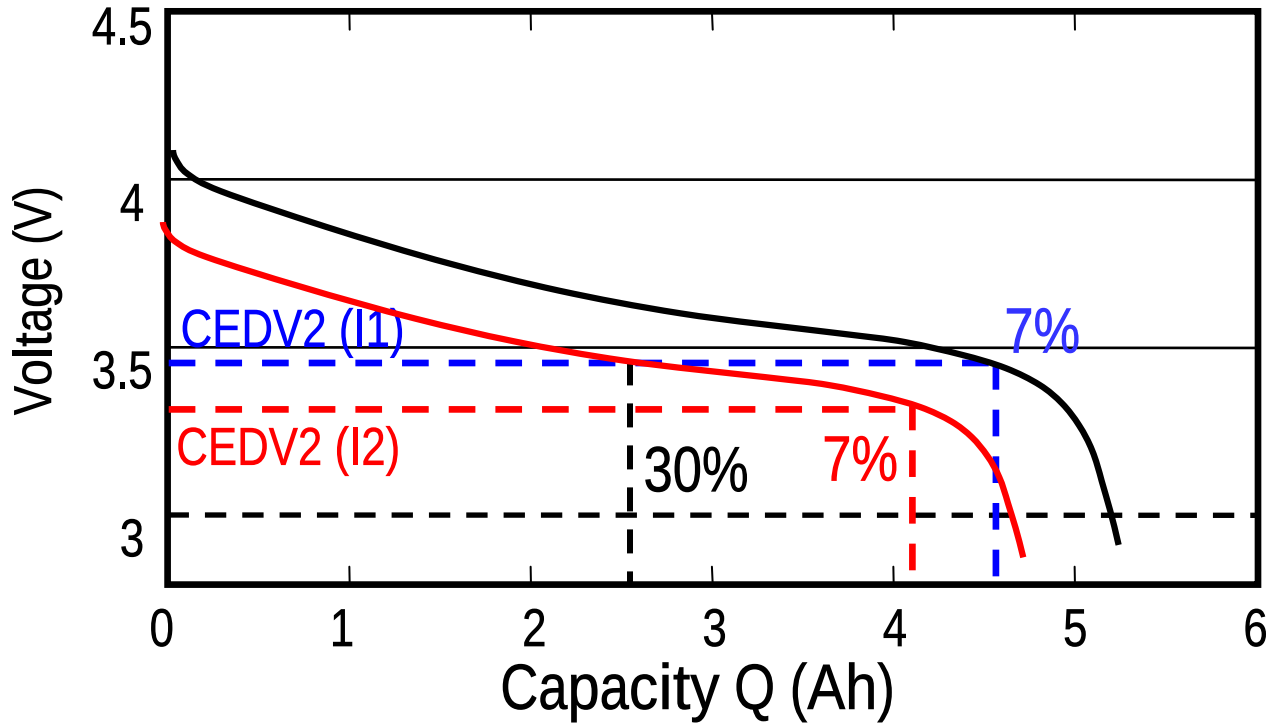


CEDV = OCV(T,SOC) – I • R(T,SOC)

- Modeling: R(SOC,T), good for new battery
- Calculate CEDV2 (7%) and CEDV1 (3%) threshold at any I and T.
- Data collection specific for each battery: Current, temperature dependent voltage model

# Impedance Track™ Based Gas Gauge

# Issue Review

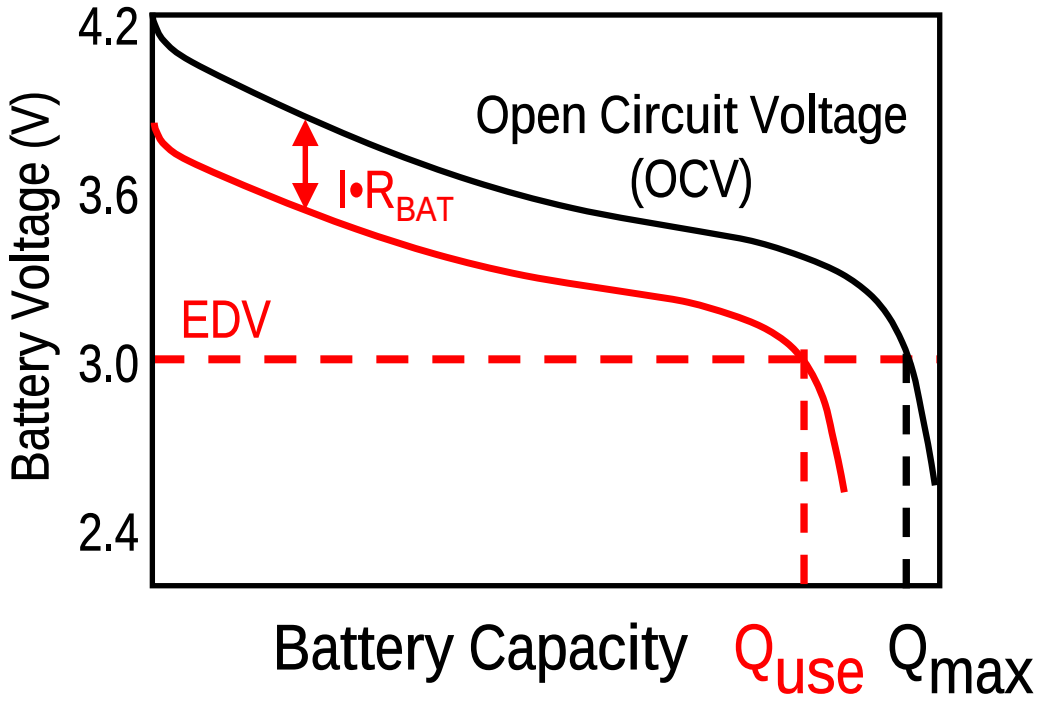


- Voltage Based Gas Gauge:
  - Good for no load
  - V = OCV(T,SOC) – I • R(T,SOC, Aging)
- Current Integration Gas Gauge: CEDV = OCV(T,SOC) - I • R(T,SOC, Aging)

Problem: Battery Impedance = f (Aging, SOC, T)

# Impedance Track™ Gas Gauge

- Voltage based gas gauge: Accurate gauging under no load
- Coulomb counting based gauging: Accurate gauging under load
- Combine advantages of voltage and current based methods
- Update impedance at every cycle using voltage and current information
- Calculate remaining run-time at given average load using both open circuit voltage and impedance information.

$$V = OCV(T,SOC) - I \bullet R(T,SOC)$$

# How To Measure the Impedance?

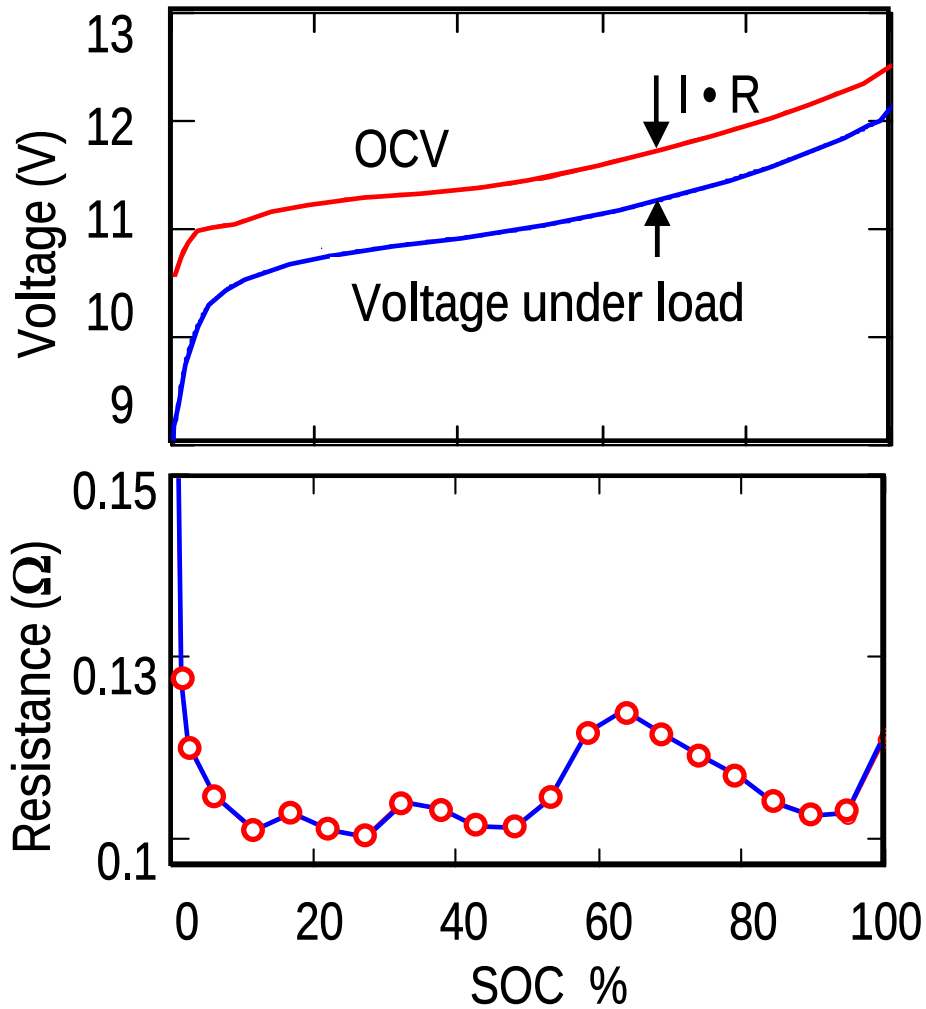


$$R_{BAT} = \frac{OCV - V_{BAT}}{I_{AVG}}$$

- Updates impedance at every cycle using voltage and current
- Uses impedance, discharge rate and temperature to adjust FCC.

# How to Measure OCV ?

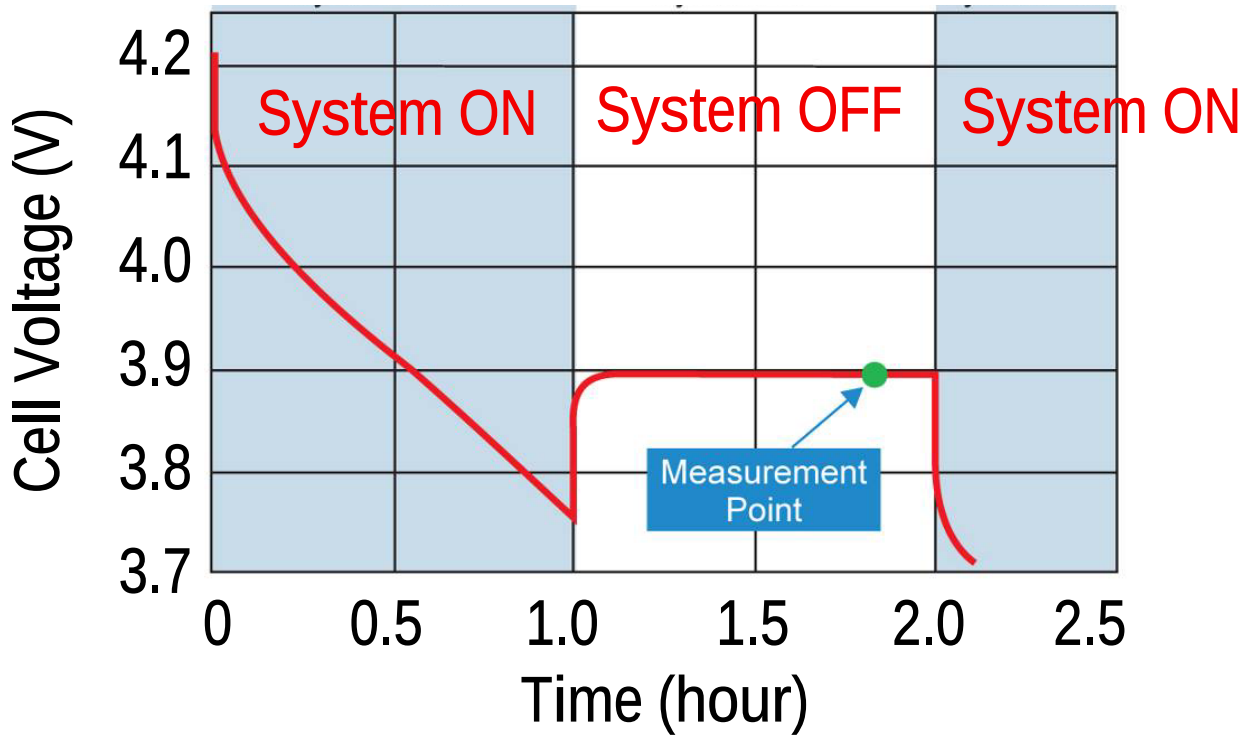


- OCV measurement allows SOC with 0.1% max error
- Self-discharge estimation is eliminated

# Learning $Q_{max}$ without Full Discharge

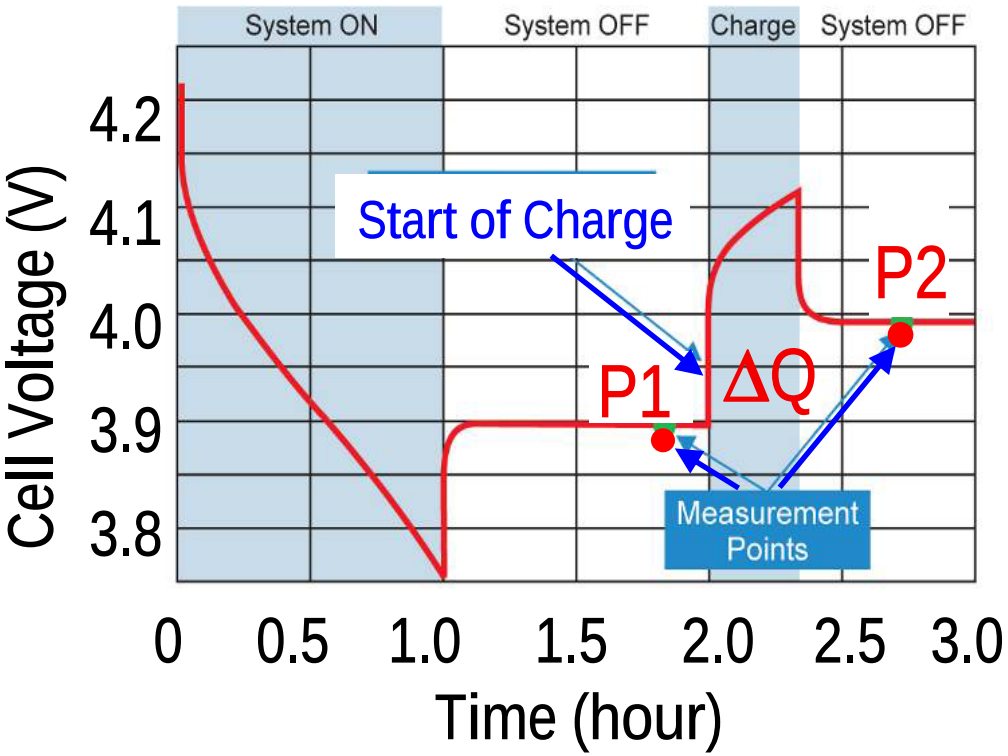


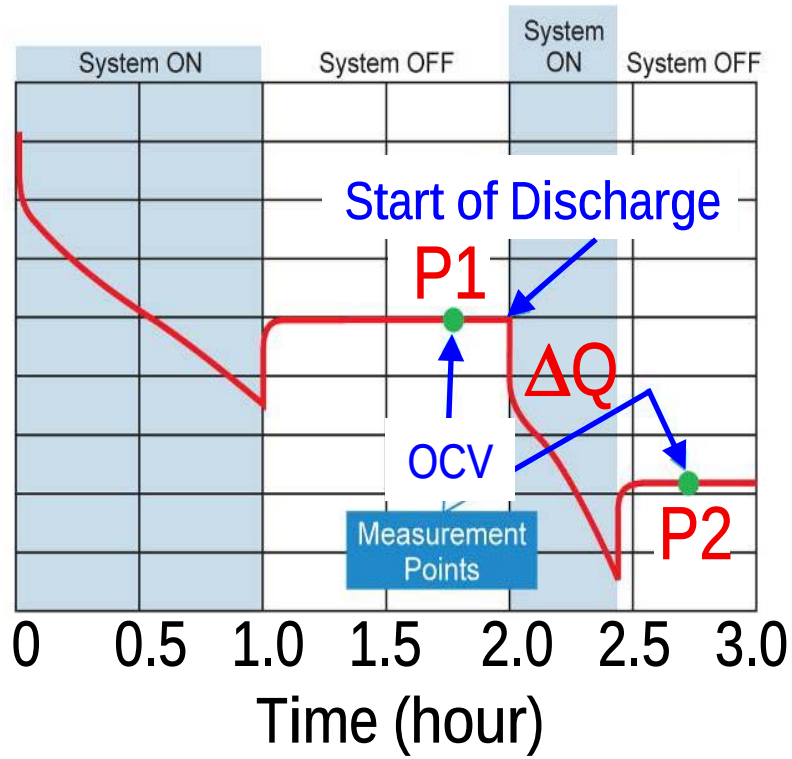


- Charge passed is determined by exact coulomb counting
- SOC1 and SOC2 measured by its OCV
- Method works for both charge or discharge exposure

$$Q_{max} = \frac{\Delta Q}{SOC1 - SOC2}$$

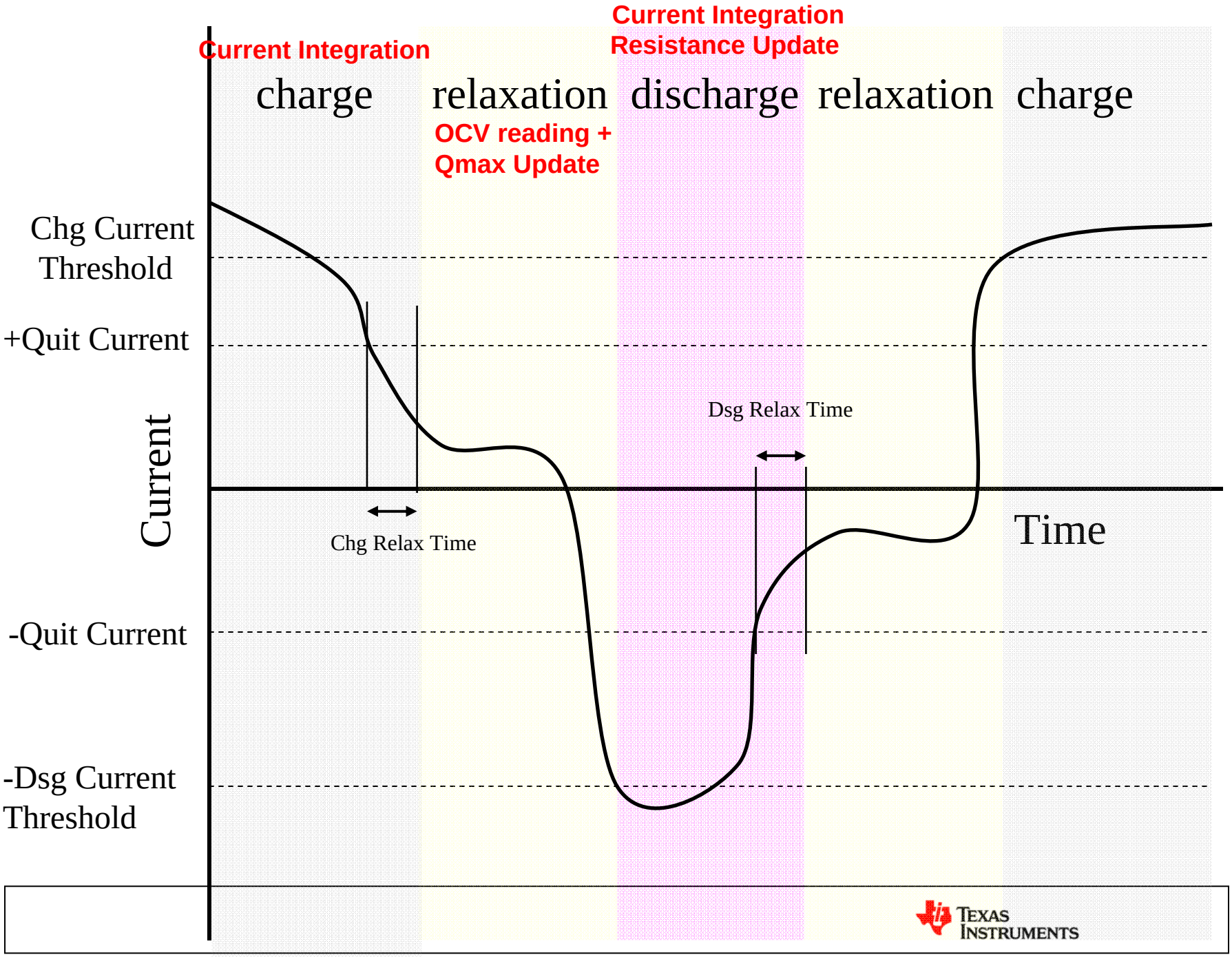
Current Integration
Current Integration
Resistance Update
charge
relaxation
discharge
relaxation
charge
OCV reading +
Qmax Update
Chg Current
Threshold
+Quit Current
Current
Dsg Relax Time
Chg Relax Time
Time
-Quit Current
-Dsg Current
Threshold
Texas
Instruments

# Resistance update process

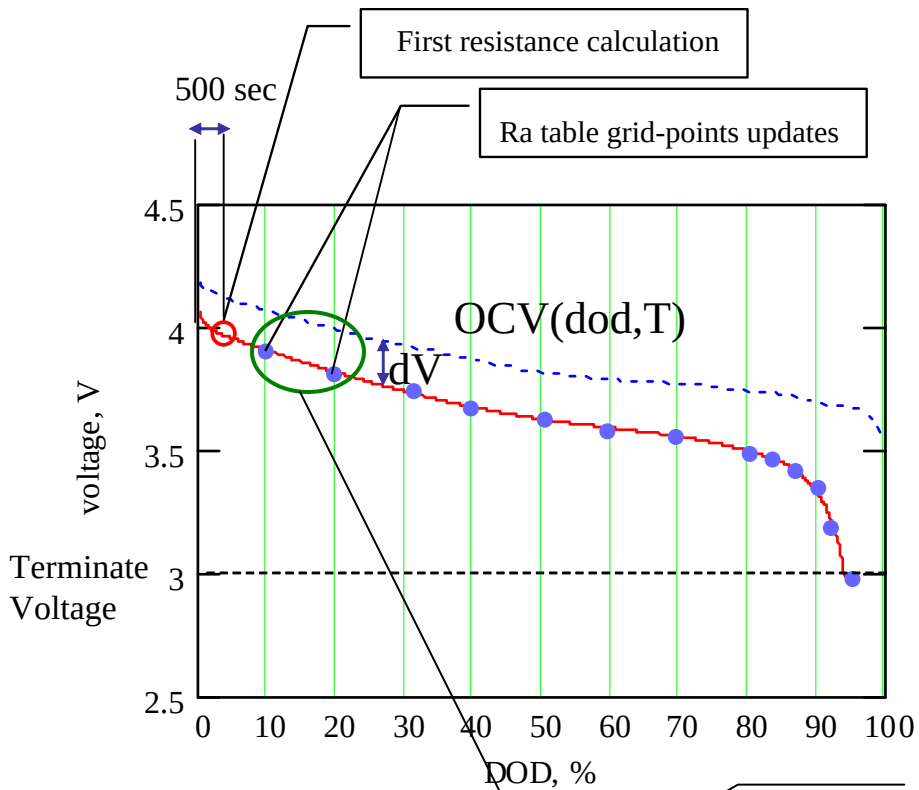


Close-up of a single update interval

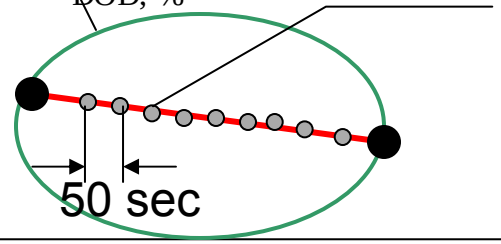


Resistance updates in RAM

- **The Resistance in data flash (Ra table) is updated after 10% (and after 80% DOD after 3%) intervals of DOD.**
- **During entire interval (for example from 50 to 60% DOD) we take resistance measurements every 50 sec and store them in RAM.**
- **Many resistance measurements are stored in RAM before GG reaches an actual grid-point (for example DOD exceeds 60%) and makes an update of Ra in data-flash by doing linear regression from the points stored in RAM.**

# Challenges for system side gauging

| Requirement | Voltage Correlation | Voltage + IR correction | Coulomb counting | Impedance Track |
|---|---|---|---|---|
| Series cells | No | No | Yes | No |
| Interchangeable batteries | Yes | Yes | No | Yes |
| Max. error: New | 50% | 15% | 2%, full charge | 1% |
| 300 cycles | 100% | 30% | 20% | 3% |
| Battery health | No | No | No | Yes |
| Processing needs | Low | High | Low | High |
| Battery expertise | High | High | Low | High |
| Multiple chemistries support | No | No | Yes | Yes |

# Single-Cell Fuel Gauge Roadmap

Protector
Fuel Gauge
Security
Product Key

## Fixed EDV

*released*
**bq27000**

- Fixed EDV
- HDQ Interface
- 10 pin, 3x4 mm QFN

*released*
**bq27200**

- Fixed EDV
- I2C Interface
- 10 pin, 3x4 mm QFN

## Compensated EDV

*released*
**bq27010**

- Compensated EDV
- HDQ Interface
- 10 pin, 3x4 mm QFN

*released*
**bq27210**

- Compensated EDV
- I2C Interface
- 10 pin, 3x4 mm QFN

## Coloumb Counting

## Impedance Track™

*released*
**bq27500**

- Impedance Track™
- ***System side design***
- 12 pin, 2.5x4 mm QFN

*released*
**bq27541**

- Impedance Track™
- ***Battery Pack side design***
- ***SHA-1 Security integrated***
- LDO integrated
- 12 pin, 2.5x4 mm QFN

*released*
**bq27510**

- Impedance Track™
- System side design
- ***LDO integrated***
- 12 pin, 2.5x4 mm QFN

**bq27550**

- Impedance Track™
- Battery Pack side design
- SHA-1 Security integrated
- LDO integrated
- ***Integrated protector***

# Multi-Cell Fuel Gauges

Product Key

## Coloumb Counting

## Impedance Track™

**bq2060A** — *released*
- Fixed EDV
- 28 pin SSOP
- 5 LEDs

**bq2083** — *released*
- Compensated EDV
- 38 pin TSSOP
- 5 LEDs

**bq2084** — *released*
- Compensated EDV
- 38 pin TSSOP
- 5 LEDs

**bq29311** — *released*
- AFE for SAFETY
- Cell balancing
- 24 pin TSSOP

**bq29312** — *released*
- AFE for SAFETY
- Cell balancing
- 24 pin TSSOP

**bq20z80** — *released*
- Impedance Track II
- 38 pin TSSOP
- 5 LEDs

**bq20z90** — *released*
- Impedance Track II
- 30 pin TSSOP
- 5 LEDs

**bq20z95** — *released*
- Impedance Track II
- Single Chip Solution
- Integrated AFE protector

**bq20z60** — *released*
- Impedance Track III
- 30 pin TSSOP
- 5 LEDs
- Charger control

**bq20z65** — *released*
- Impedance Track III
- Single Chip Solution
- Integrated AFE protector
- Charger control

**bq20z70** — *released*
- Impedance Track II
- 20 pin TSSOP
- No LEDs

**bq20z75** — *released*
- Impedance Track II
- Single chip solution
- Integrated AFE protector

**bq20z40** — *released*
- Impedance Track III
- 20 pin TSSOP
- No LEDs
- Charger control

**bq20z45** — *released*
- Impedance Track III
- Single chip solution
- Integrated AFE protector
- Charger control

**bq29330** — *released*
- AFE for SAFETY
- Call balancing
- 30 pin TSSOP

**bq29330** — *released*
- AFE for SAFETY
- Call balancing
- 30 pin TSSOP

# Battery Charge Management

# Switching Charge Profile for Li-Ion Battery

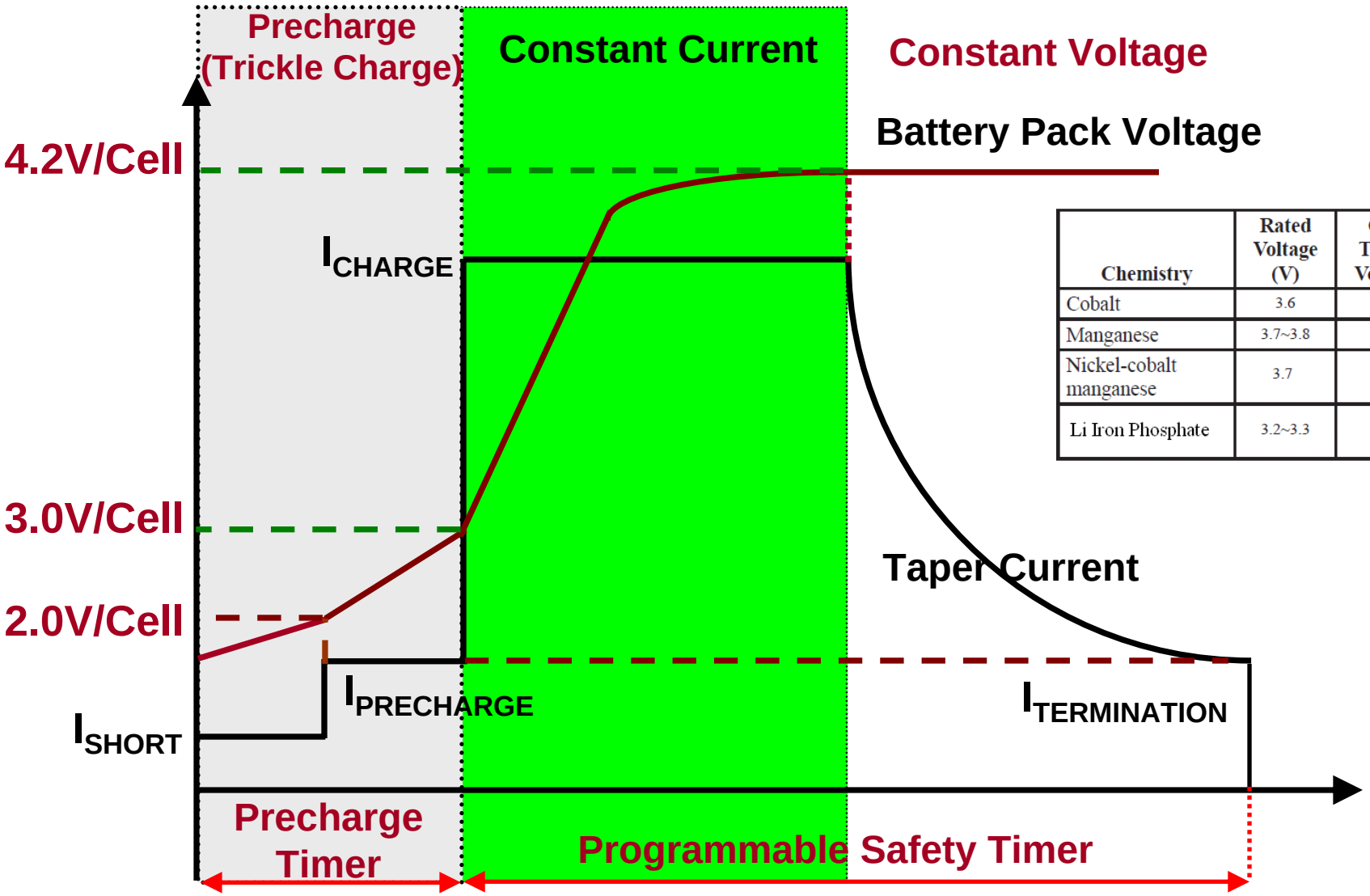


| Chemistry | Rated Voltage (V) | Charge-Terminate Voltage (V) |
|---|---|---|
| Cobalt | 3.6 | 4.2 |
| Manganese | 3.7~3.8 | 4.1~4.3 |
| Nickel-cobalt manganese | 3.7 | 4.2 |
| Li Iron Phosphate | 3.2~3.3 | 3.5~3.6 |

# Li-Ion Battery Charger Portfolio

- For Single-Cell Products:
  - Linear chargers (bqTINY Series)
  - Switch-mode chargers (bqTinySwitcher Series)
  - Simple Integrated solutions (bqHYBRID Series)
  - Charger Front End Protection (bqCFE Series)

- For Multi-Cell High-End Portables:
  - Host-controlled chargers (bqPOWER series)
  - Standalone chargers (bqSWITCHER series)

# Li-Ion Linear Charger Portfolio for 1s

**Dual Input Power Path** →

bqTINY™-III

**bq24030**

$18V_{IN}$ – 1.5A
**Power Path Mgt**
**Thermal Regulation**
3.5x4.5 QFN

**Dual Input AC/USB** →

bqTINY™-II

**bq24020**

$7V_{IN}$ – 1A
3x3 QFN

bqHYBRID

**bq25010**

$7V_{IN}$ – 1A
**Integrated DC/DC Converter (150mA)**
3.5x4.5 QFN

*USB Charger*

**bq24072**

**$28V_{IN}$ – 1.2A**
**Full USB Compliance**
**Power Path Mgt**
**3x3 QFN**

**Single Input Power Path** →

**Single Input** →

*Low Cost Solution*

**bq24085**

$18V_{IN}$ – 750mA
OVP, Thermal Reg
3x3 QFN

*USB Charger*

**bq25040**

**$30V_{IN}$ – 1.2A**
**100/500mA USB limit**
**Vin DPM**
**Integrated LDO**
**2x3 QFN**

**bq24010**

$18V_{IN}$ – 1A
3x3 QFN
**4.1/4.2/4.4 Vbat Options**

**bq24060**

$18V_{IN}$ – 1A
**OVP, LDO Mode**
**Thermal Regulation**
3x3 QFN

**Cost** →

# Integrated FET Switch-mode Chargers

**bq24150**

***Very small solution size***

*1-cell, 1.25A,* ***3MHz,***
*20Vin, 6.5V OVP,*
*USB charging,* ***USB-OTG,***
***I2C, 2x2 WCSP***

**bq24120**

*EMI improvement*
***(increase gate resistance to slow down switching)***
*Standalone only*

**bq24100**

*$20V_{IN}$, 2A, 1.1MHz*
***1-3 Cell***
*3.5x4.5 QFN*
*Standalone & Host controlled*

**Cost**

# Switch-mode Charge Controller

**bq24750A/51B**

$30V_{IN}$ – 8A
High V/I Accuracy
**Dynamic Power Mgt**
**System Power Selector**
2-4 Cell, 300KHz
5x5 QFN-28
Hardware Control Interface

**bq24721C**

$30V_{IN}$ – 8A
**Dynamic Power Mgt**
3-4 Cell, 300 or 500 KHz
5x5 QFN-28
**SMBus Interface**
**System Power Selector**

**bq246xx**
**( in development)**

*30-V, stand-alone,*
*Dynamic Power Management*
*Li-Ion, Li-Phosphate*

**bq24705**
**(4x4)**

**bq24740**
**(5x5)**

No system power selector

**bq24745**

$30V_{IN}$ – 8A
**Dynamic Power Mgt**
1-4 Cell, 300KHz
5x5 QFN-28
**SMBus Interface**

# Thermal Management

- Battery Temperature Monitoring
  - Through Thermister input (TS pin)

- Charge IC Junction Temperature Management
  - Thermal Shutdown (typ. at 155°C) turns off charging
  - Thermal Fold-back (typ. at 125°C) reduces charging current

( termination detect function is disabled )

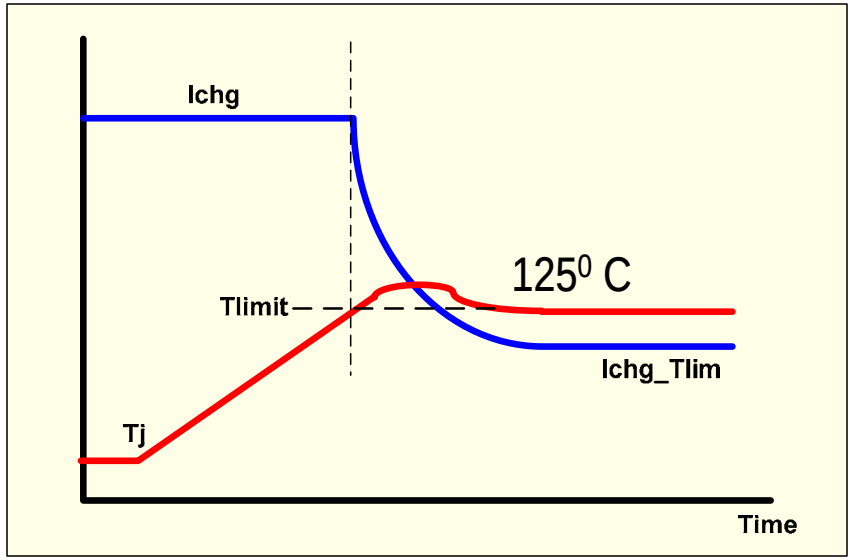

# Charging with an Active Sytem Load

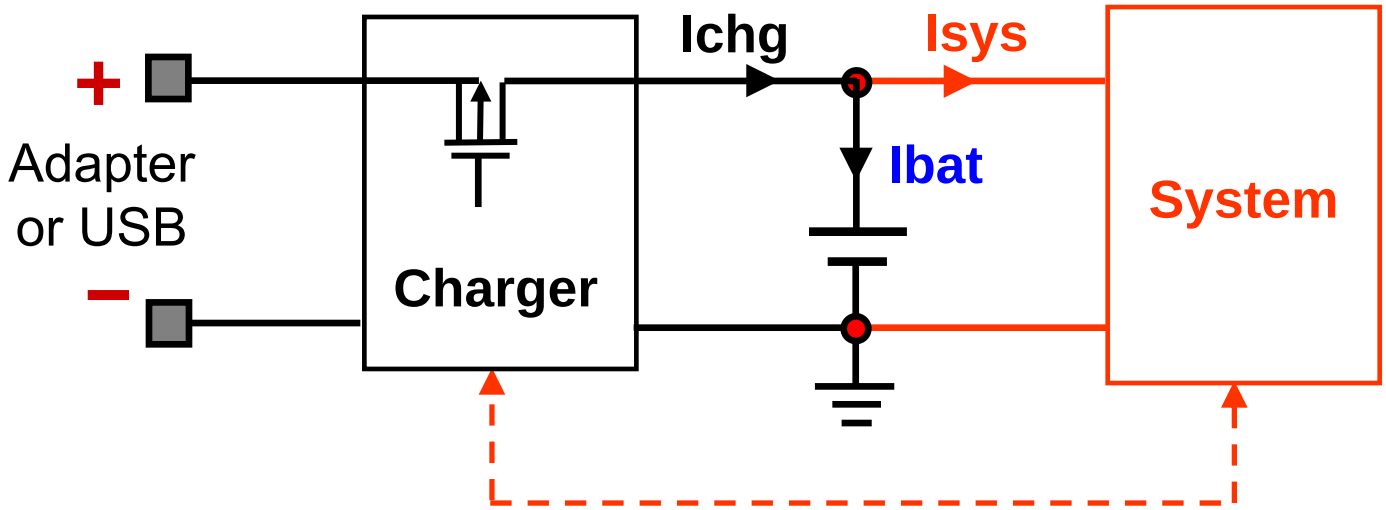


For standalone charger,
Ichg = Ibat

For charger with a load,
Ichg = Ibat + Isys

**Issues:**

- **Timer fault**
- **Termination interfered**

# Integrated Power Path Management Battery Charger

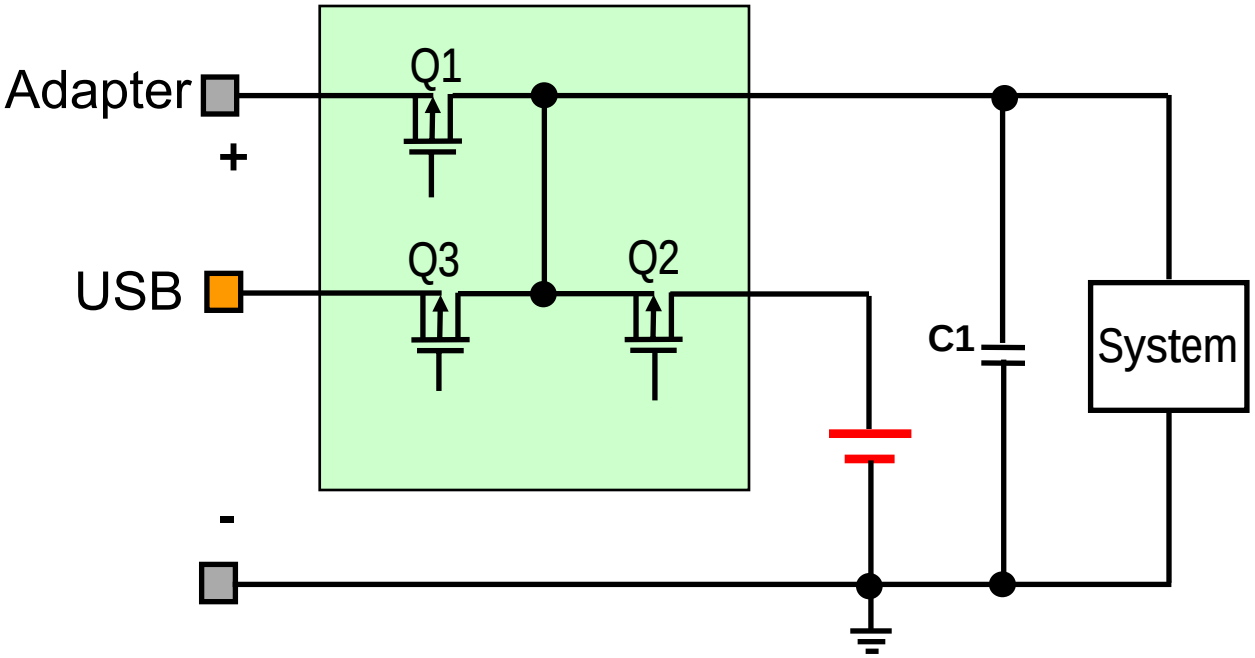


- System can operate with battery deeply depleted or removed
- Manages power sources for the system: AC adapter, USB and battery
- Charging current is dynamically adjusted based on system requirement

# Dynamic Power Path Management (DPPM)

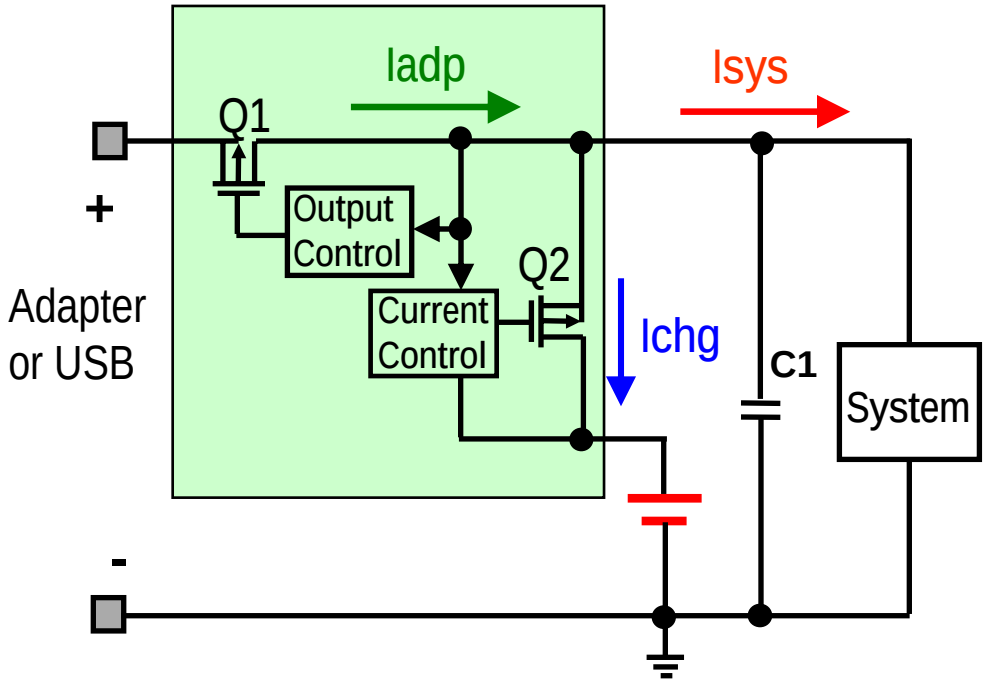


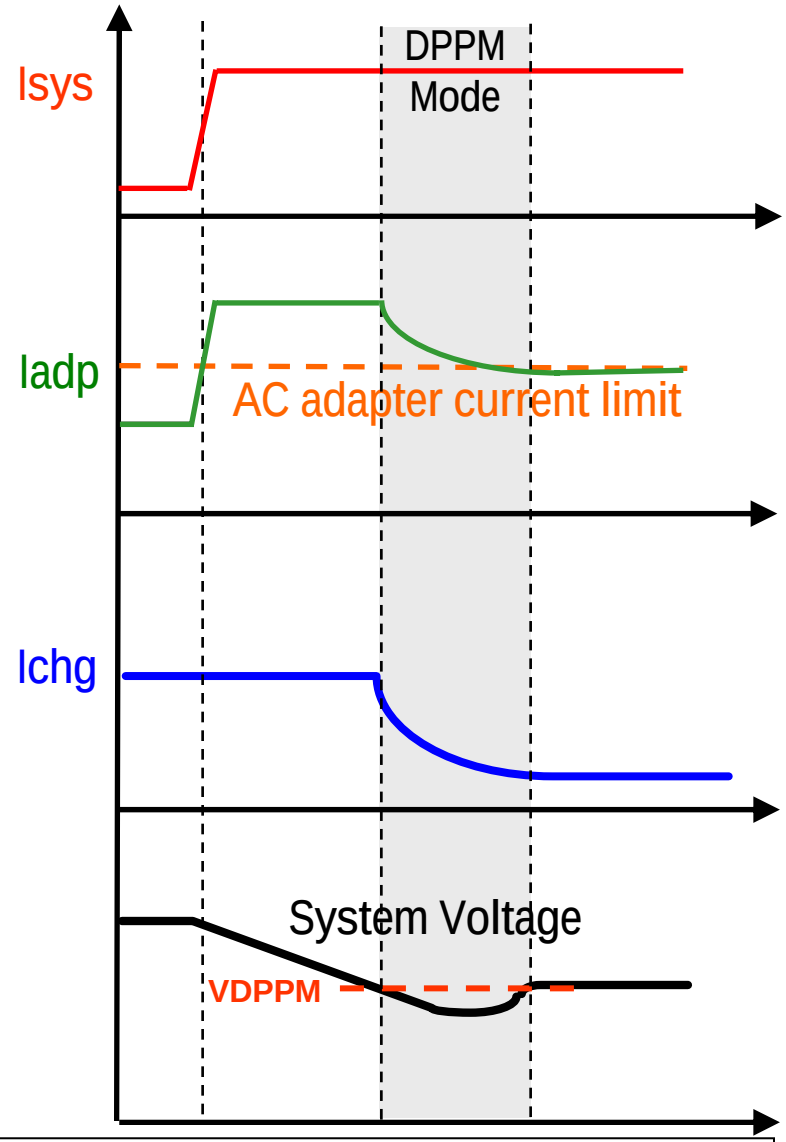


- DPPM: Reduce the charge current when the system voltage is below the programmed voltage threshold
- Allows use of cheap AC adapters. Iac_limit < (Isys + Ichg)

# Externally supplying second input + power path

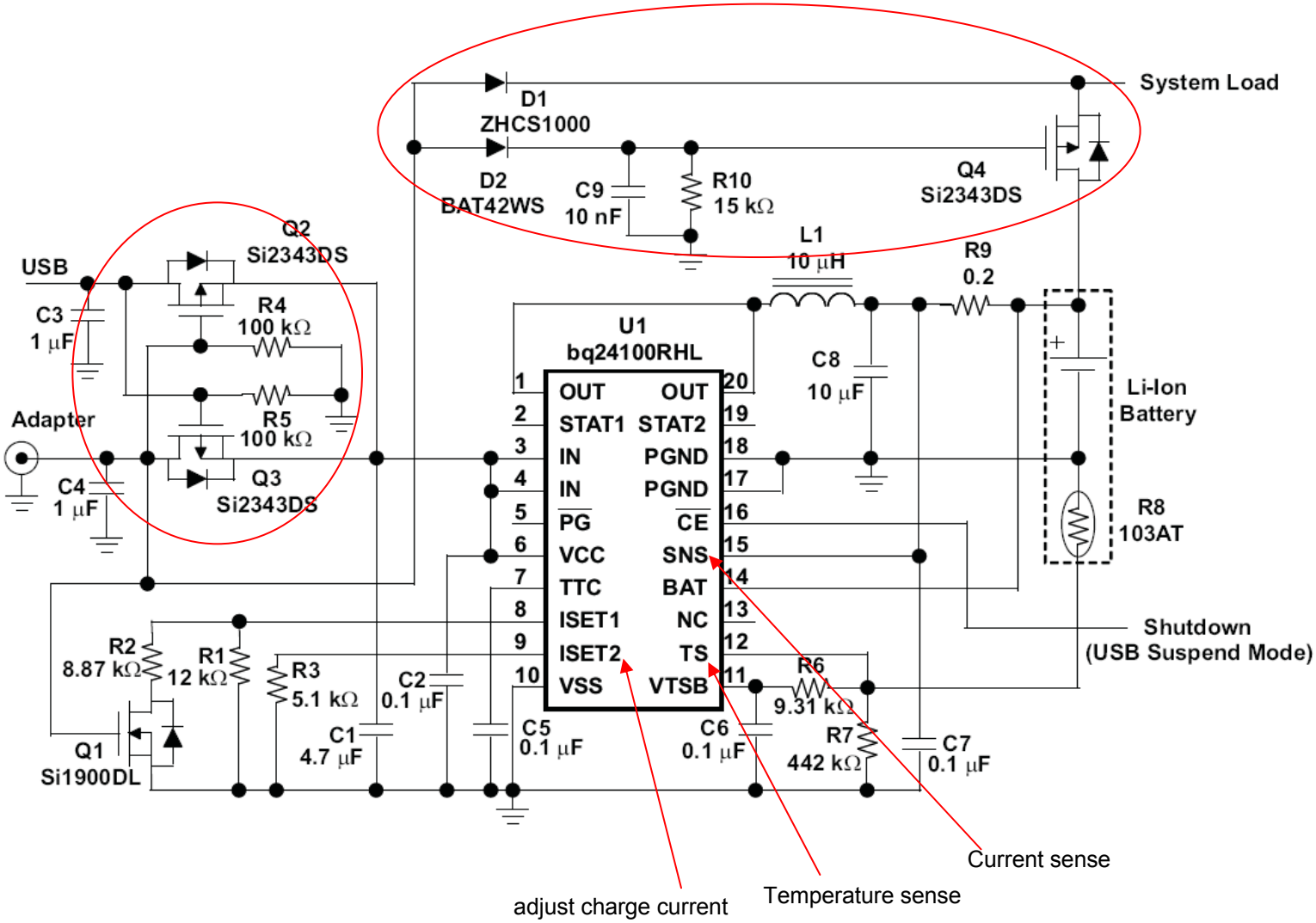


see SLUA437.pdf on http://www.ti.com for more information

# LiFePO4 Battery Charger

# LiFePO4 Charger based on bq24105/125 EVM (changes in red)

## up to 4 cell, <2A application

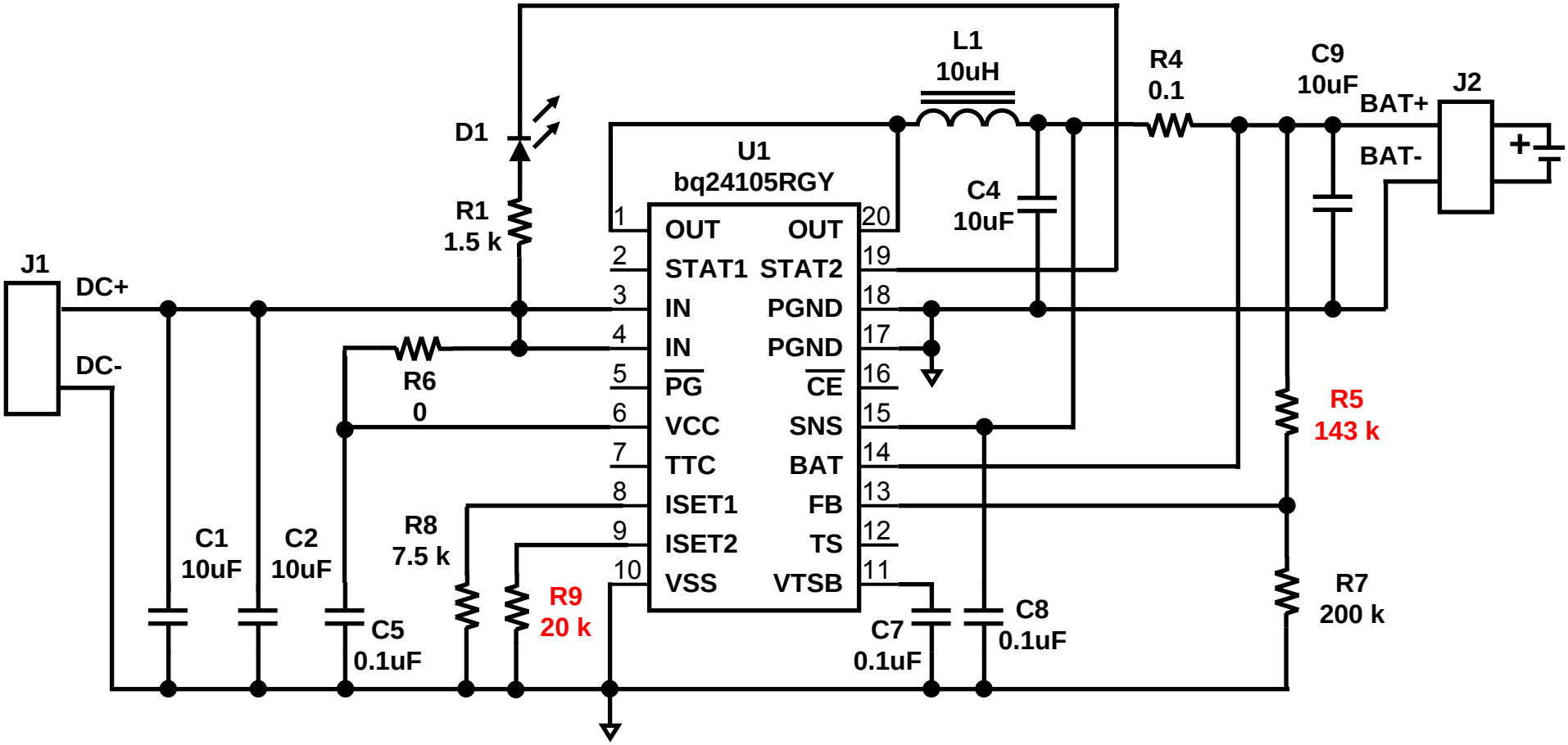


- Charge voltage change from 4.2V to 3.6V
- Refresh voltage change from 4.1V to 3.516V

} - running frequently in refresh mode

# LiFePO4 Charger based on bq24105/125 EVM (changes in red)

## up to 4 cell, <2A application

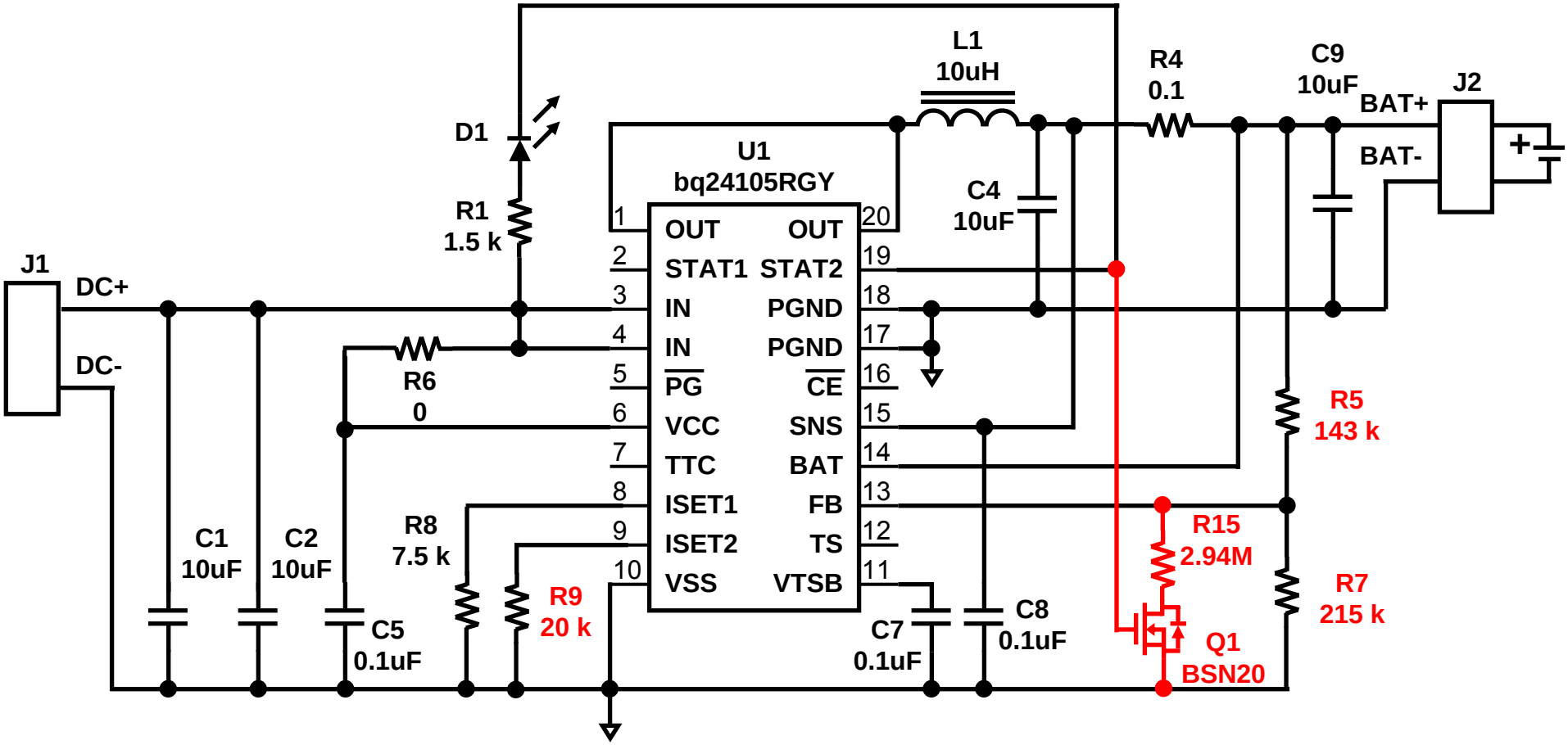


- Charge voltage change from 4.2V to 3.6V
- Refresh voltage change from 4.1V to 3.4V

} solved by lowering refresh voltage

# Discharge Time Comparison

| Discharge Rate | Discharge time for reaching rechargeable threshold of 3.5V | Discharge time for reaching rechargeable threshold of 3.4V |
|---|---|---|
| 10mA | 57 minutes 38 seconds | 4 hours 14 minutes 30 seconds |
| 100mA | 4 minutes 56 seconds | 22 minutes 56 seconds |
| 200mA | 2 minutes 9 seconds | 9 minutes 10 seconds |
| 500mA | 35 seconds | 2 minutes 50 seconds |
| 1A | 10 seconds | 1 minute 6 second |
| 2A | 2 second | 14 seconds |

Application note available online:

http://focus.ti.com/lit/an/slua443/slua443.pdf

# bq246xx: Standalone Synchronous Switch-mode Charge Controller

**Sample Now**
**RTM Sep 09**

| Features | Benefits |
|---|---|
| • NMOS-NMOS Synchronous Buck Controller | • Low Rds_on, high efficiency |
| • Stand-alone charger for Li+ chemistry | • No host control required |
| • 5V-28V Adapter Voltage | |
| • Up to 26V Battery Voltage (6 cell Li-Ion) | • Flexible solution to fit different requirements |
| • Programmable Charge Current up to 10A | |
| • +/-0.5% Charge Voltage Accuracy, +/-4% Charge Current Accuracy | • High accuracy for maximum capacity and safety |
| • Safety Protection<br>•Input Over-Voltage Protection<br>•Safety Timer<br>•Battery Thermistor Sense (TS)<br>•Battery Absent Detection | • Additional Safety Protection |
| • Status Outputs for LED or Host Processor | |
| • Internal Soft Start and Loop Compensation | • Reduced BOM cost and solution size |
| • 10µA Off-State Current | • Energy Star Compliance |
| • 16-pin or 24-pin QFN package | |
| • Support Li-Phosphate (bq24620/30) | |
| • Input Current Limiting, Dynamic Power Management and Automatic System Power Selector (bq24610/30) | • Maximize use of input current, reduce cost on adapter |

EVM

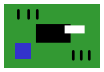

1ku pricing from $2

# Product Portfolio

| Device | Battery Chemistry | Switching Frequency | Precharge Current | Precharge Threshold | Charge Voltage Regulation | Recharge Threshold | Power Path | Package |
|---|---|---|---|---|---|---|---|---|
| bq24600 | Li-Ion or Li-Pol | 600KHz | C/10 | 3V/cell | 4.2V/cell (if R1=R2) | 100mV below Vbat | No | 4x4 QFN-16 |
| bq24610 | Li-Ion or Li-Pol | 600KHz | C/10 | 3V/cell | 4.2V/cell (if R1=R2) | 100mV below Vbat | Yes | 4x4 QFN-24 |
| bq24620 | Li-Phosphate | 300KHz | 125mA | 0.5V/cell | 3.6V/cell (if R1=R2) | 250mV below Vbat | No | 4x4 QFN-16 |
| bq24630 | Li-Phosphate | 300KHz | 125mA | 0.5V/cell | 3.6V/cell (if R1=R2) | 250mV below Vbat | Yes | 4x4 QFN-24 |

# bq24610 Typical Application Circuit

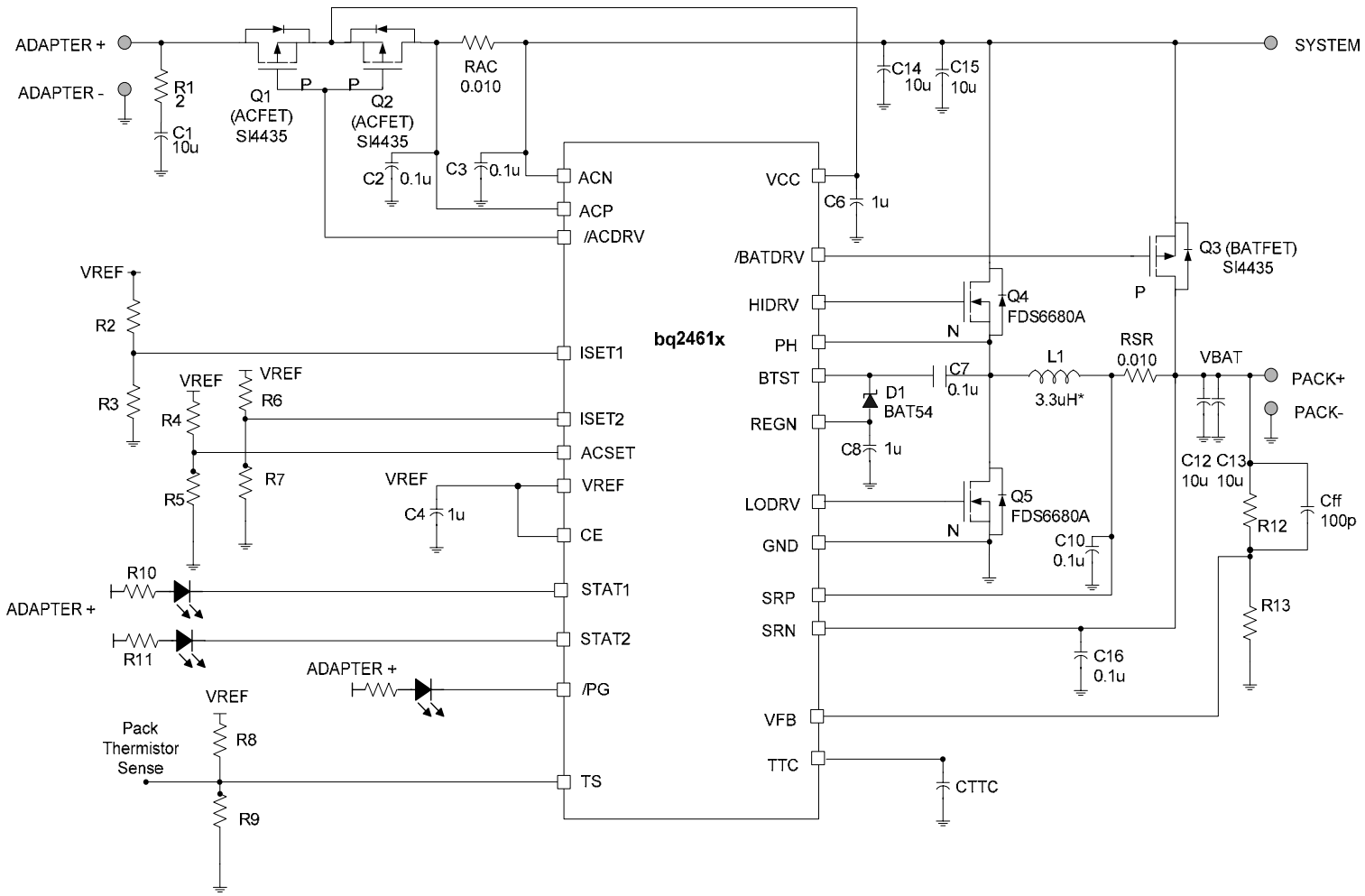

# Cell Balancing

# What is cell imbalance?

- If two or more cells are connected in series, voltages of each cell diverge during battery use.
- No two cells are identical. There are always slight differences in the state of charge (SOC), self-discharge rate,capacity, impedance, and temperature characteristics, even for cells that are the same model from the same manufacturer and even from the same batch of production.
- Since most battery chargers detect full charge by checking whether the voltage of the entire string of cells has reached the voltage-regulation point, individual cell voltages can vary as long as they do not exceed the limits for overvoltage (OV) protection.
- weak cells—i.e., cells with lower capacity or higher internal impedance—tend to exhibit higher voltage than the rest of the series cells at full charge termination. These cells are weakened further by continuous overcharge cycles.

**Purpose of Balancing**

- **Deliver as much energy during discharge as possible.**
- **Extend cycle life of battery pack**

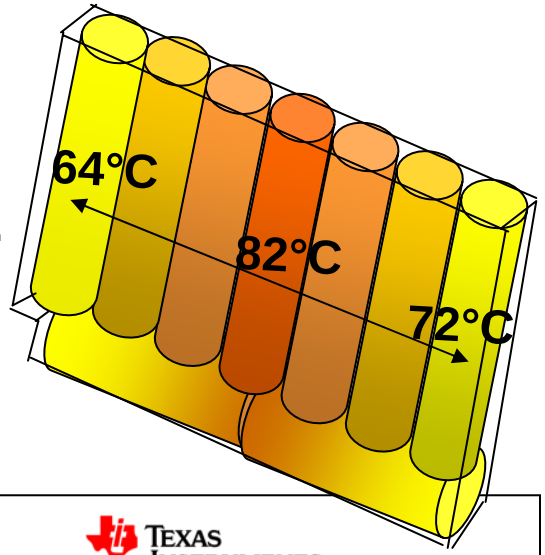

# *PowerPump™ Cell Balancing*
## *Maximum Runtime .... Every time*

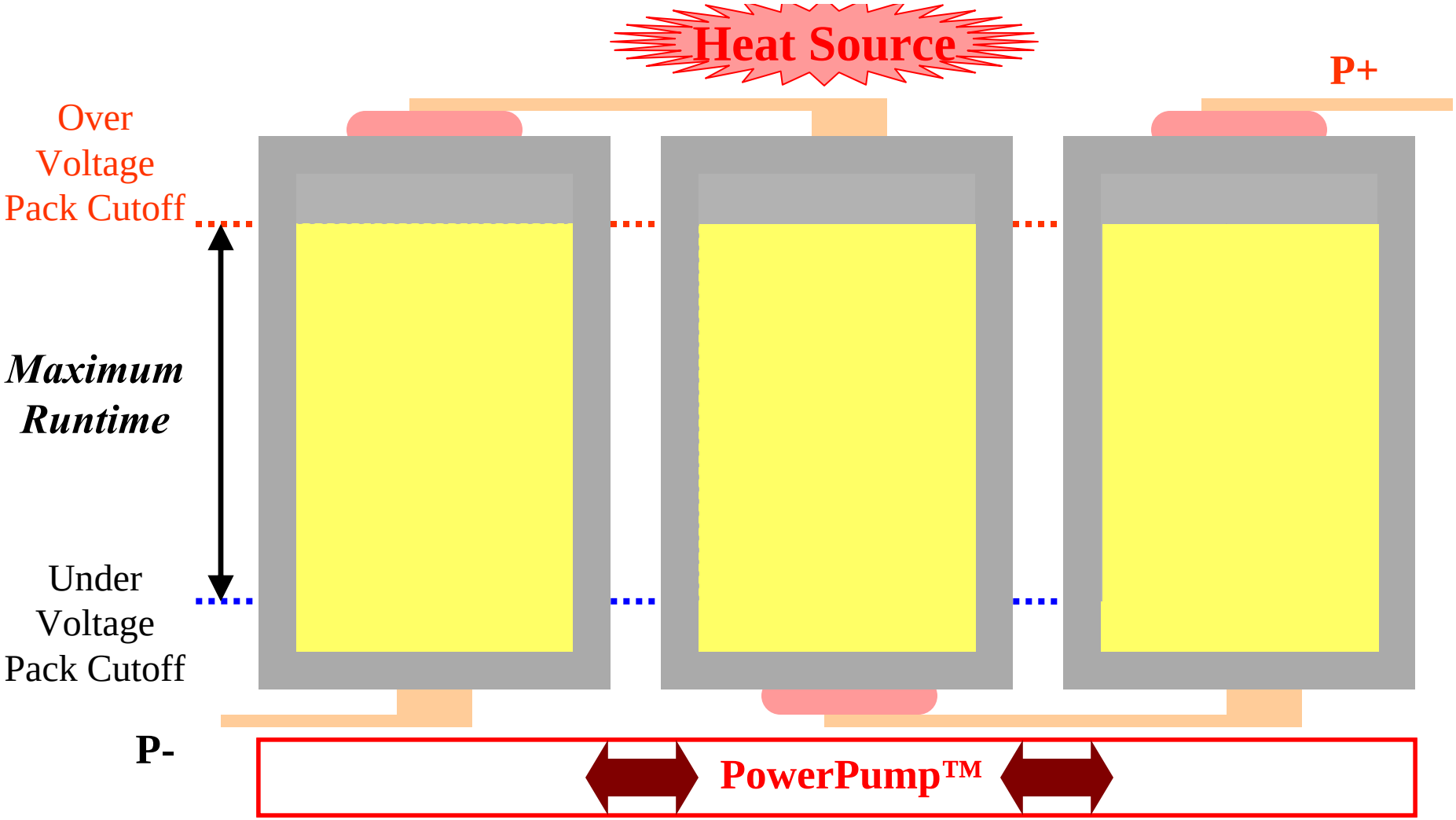

# Cell Balancing: Two Techniques

- Passiv (Bleed or Bypass) : providing alternative current path to a cell that is out of balance to other cells in series
- Active or Charge Redistribution : moving charge from higher charged cells to lower charged cells in series

# Bypass based balancing using bq77PL900

(5-10 Cell Protection IC)

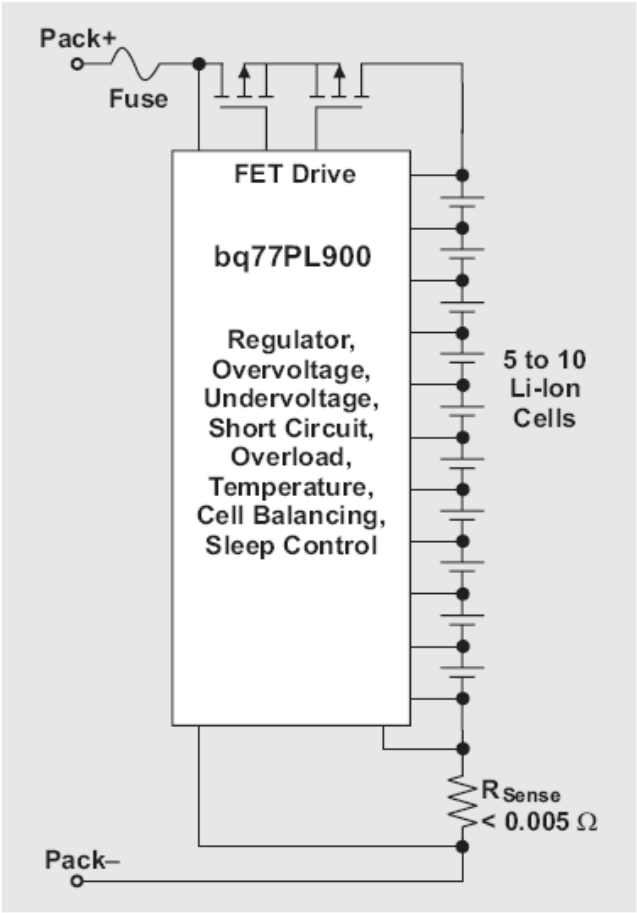


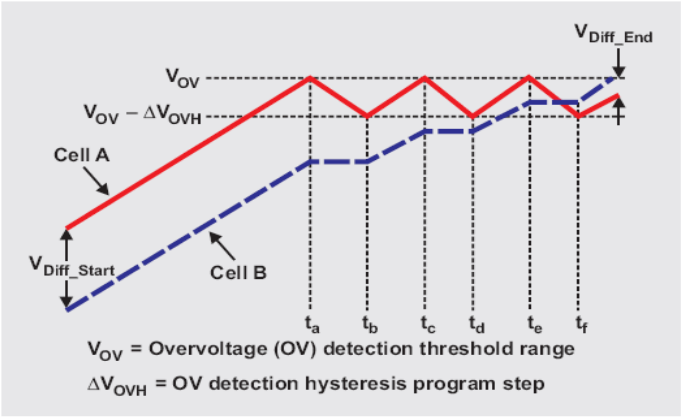


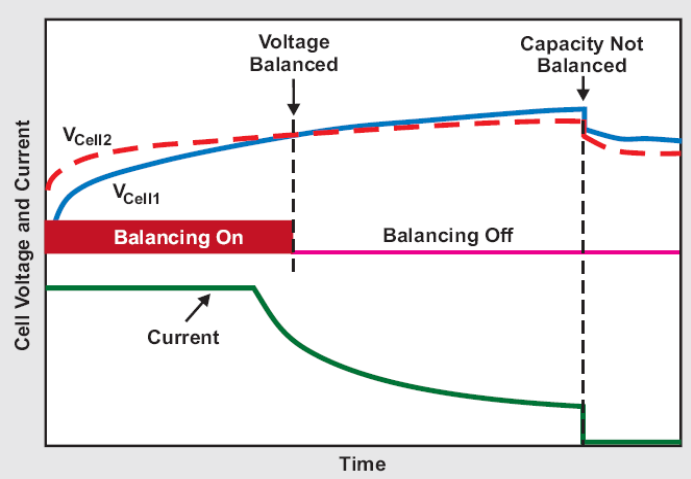


**Cell voltage based – turn ON balancing (halt charge) whenever a cell hits the overvoltage threshold**

# Bypass based balancing using bq20zxx

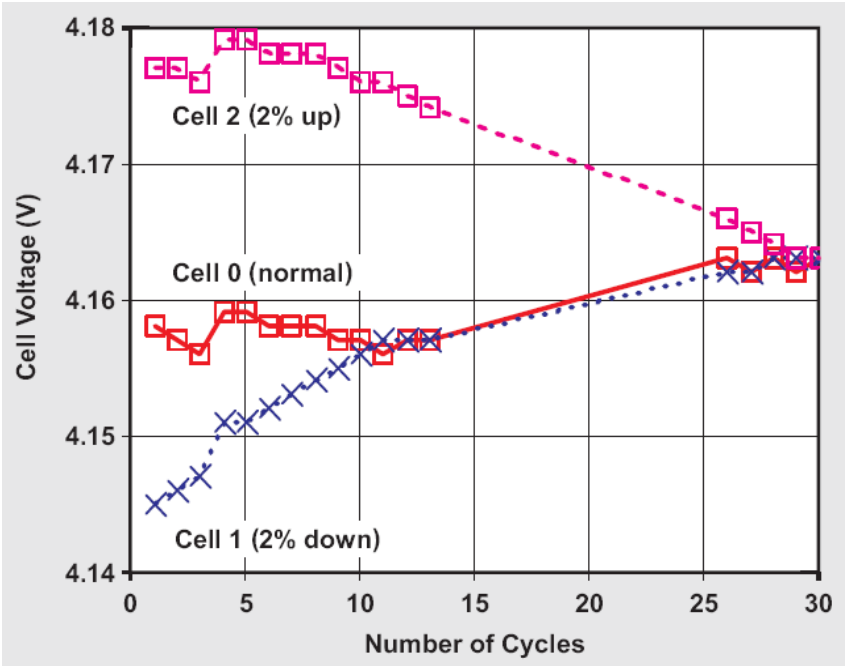


Cell 0: Normal
Cell 1: 2% down
Cell 3: 2% up

- Can take advantage of existing gas-gauging solution such as “impedance track” that already has this information
- Example: bq20z70/z80/z90
- Can balance continuously during charge, discharge or even during idle period, regardless of SOC effect on voltage
- Balancing not distorted by cell impedance differences

**SOC and Total Capacity Based – bq20zxx → achieves better accuracy**

# Active (inductive) based balancing using bq78PL114

(battery controller for 3-12s incl. gasgauging)

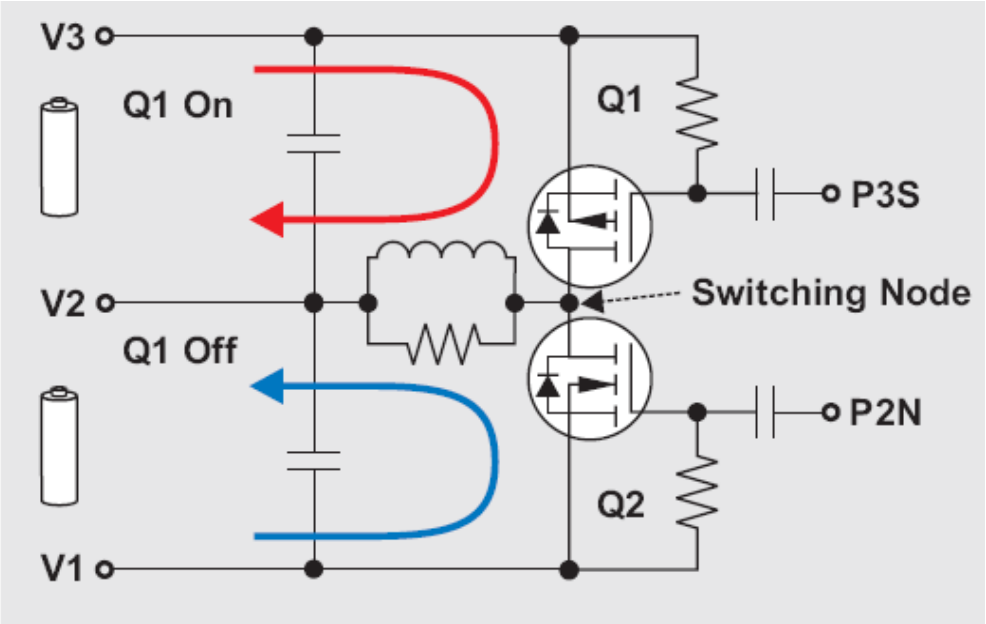


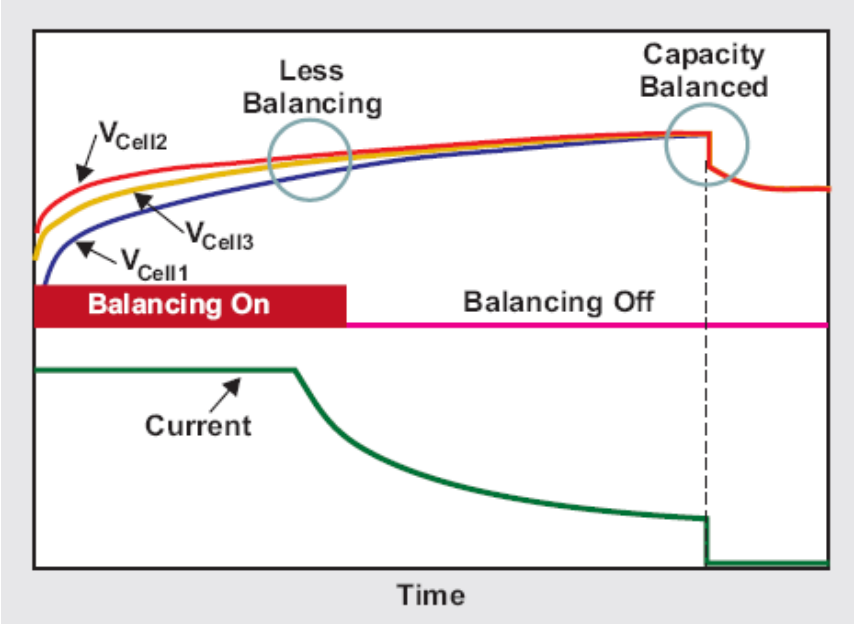


- Balancing can happen during any battery operation (charge, discharge, or rest)
- Due to higher balancing currents most typical capacity imbalances (of less than 5%) can be overcome in one or two cycles.

***SOC pumping* (predictive balancing)*** **determines the exact charge that needs to be transferred between cells so that cell capacities are balancedat the end of charge.**

**one of three modes*

# PowerPump™ Operation

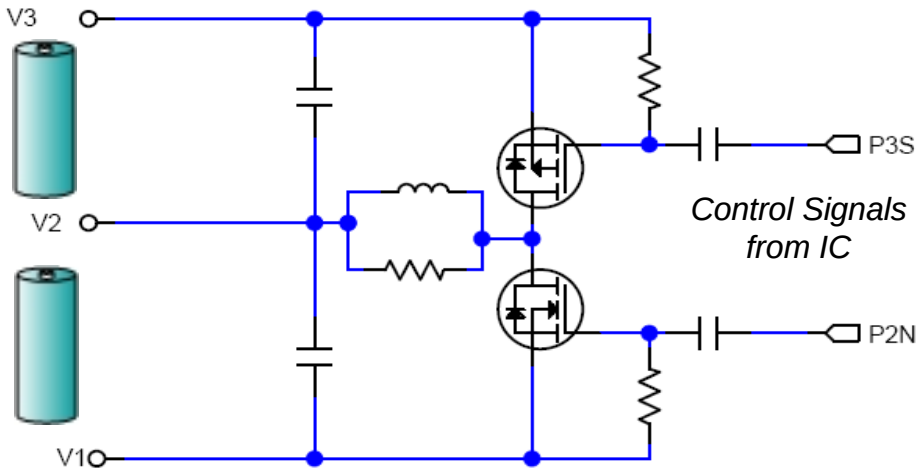


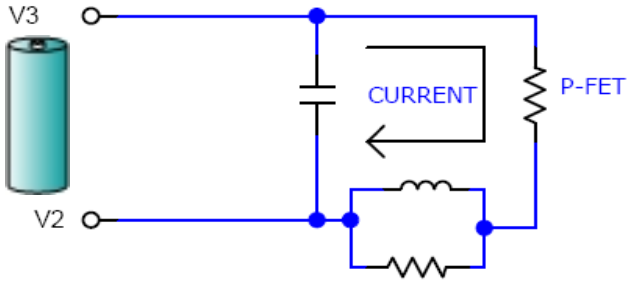


- Example: Pumping from Cell 3 →Cell 2
  - P3S frequency is 200 kHz, 33% positive Duty Cycle
  - P3S Turns PFET ON
  - $\Delta I/\Delta T = V/L$ : Energy in Inductor builds

# PowerPump™ Operation

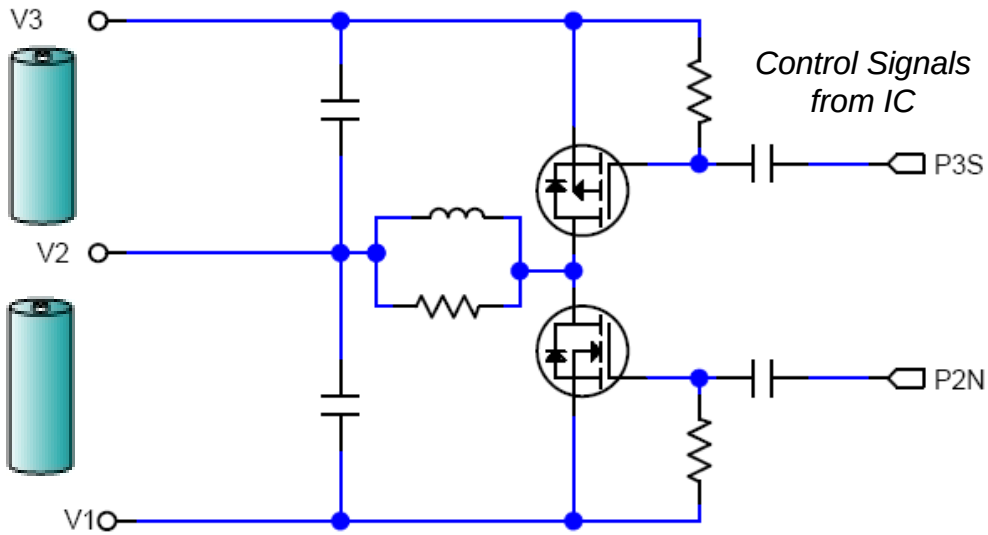

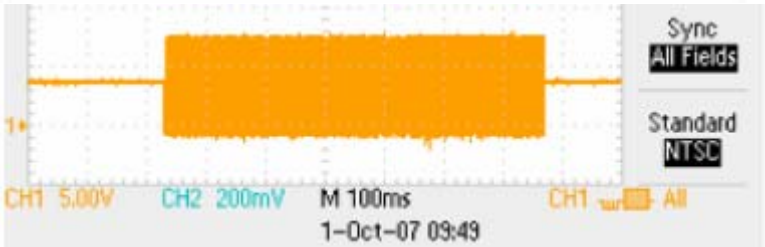


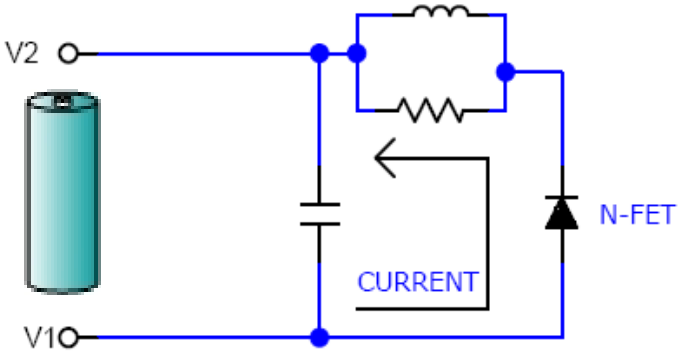


- Example: Pumping from Cell 3 →Cell 2
  - P3S Turns FET Off
  - Current continues through NFET (body diode)
  - Energy transfers to Cell 2
  - Time average Balancing current is 40 to 50 mA
  - HF AC Currents confined to PCB

# High Cell Count & Emerging Markets

| Application | ~ 4cell | 5,6cell | 7cell | 8cell | 9,10cell | 12cell | 14cell | >20cell |
|---|---|---|---|---|---|---|---|---|
| Power Tools | ← bq77PL900 → | | | | | | | |
| E-bike | ← bq77PL900 → | | | | | | ✓ | |
| UPS | ← bq78PL114 + bq76PL102 → ← bq77PL900 → | | | | | | ✓ 56V | |
| Medical/ Military | ← bq78PL114 + bq76PL102 → | | | | | | | |
| Others | ✓Toy | ✓Printer | | ✓Vacuum | ✓ Robot ✓Scooter | ✓ Robot | ✓ Robot | ✓ Robot |
| EV- HEV - PHEV | | ✓HEV | | | | ✓HEV | | ✓HEV |

# Thank you