Industrial Interfaces

- Features and Benefits of various Industrial Networks
  - Field Busses
  - Sensor/Actuator Interfaces
- Digital Isolation

Why not one universal solution?

- **Historical – networks grew out of discrete wiring in various ways**
- **Protective – each automation vendor is jealous of his solution**
- **Technical – each network has strengths and weaknesses depending on the application**

Standardization?

In 2000, a set of interested parties created the IEC fieldbus standard, IEC 61158 with eight (8) different protocol sets called "Types" as follows:

Type 1 — FOUNDATION Fieldbus H1
Type 2 — ControlNet
Type 3 — PROFIBUS
Type 4 — P-Net
Type 5 — FOUNDATION Fieldbus HSE (High Speed Ethernet)
Type 6 — Interbus
Type 7 — SwiftNet (a protocol developed for Boeing, since withdrawn)
Type 8 — WorldFIP

This form of "standard“ concentrates less on commonality, and achieves its primary purpose — elimination of restraint of trade between nations. Issues of commonality are left to the international consortiums that support each of the fieldbus types.

After this "8-headed monster" **was approved, the IEC standards work ceased and the committee was dissolved. New protocols, for safety fieldbusses or realtime ethernet based fieldbusses are being accepted into the definition of the international fieldbus standard only in form of a typical 5 year maintainance cycle.**

Recent additions or planned additions to IEC 61158 include but are not limited to:

Type 10 — PROFINET IO
Type 12 — EtherCAT

Automation Bus Choices

- 4-20 mA
  - Analog current loop
  - < 20 Hz bandwidth
- HART
  - Modulated 4-20 mA
  - 1200 bps
- Foundation H1
  - 31.25 kbps
- RS-232
- CompoNet
- CC-Link
- RS-485
- CAN
  - CAN-Open
  - DeviceNet
- Interbus
  - RS-485-based
- Modbus
  - RS-232-based
  - RS-485-based
- ProfiBus
  - RS-485-based
  - IEC 1158-2-based
  - Fiber-based
- ControlNet
- Ethernet
  - Ethernet/IP
  - ProfiNet
  - EtherCAT
  - Foundation HSE
  - Ethernet Powerlink
  - Modbus TCP
  - DriveCliq
  - Sercos III

Design Concerns

- **Interoperability**
  - Existing network installation
  - Available components
  - Future development
- **Speed**
  - Signaling rate
  - Data rate
- **Noise**
  - immunity
  - generation
- **Network length**
- **Number of nodes**
- **Power**
  - active dissipation
  - low-power modes
  - voltage supplies needed
- **Costs**
  - electronic components
  - processing burden
  - cable & connectors
- **Robustness**
  - Temperature
  - ESD protection
  - Isolation options
  - Fault detection

Measures of Bus Speed

Standard	Data Rate	Minimum message	Protocol latency
4-20 mA	**Limited by analog components, less than 30 Hz (typical)**	**none**	**None**
HART	**1.2 kbps**	**11 bits**	**> 9000 usec**
DeviceNet	**125 kbps, 250 kbps, 500 kbps**	**41 bits**	**> 81 usec**
ControlNet	**5 Mbps**	**56 bits**	**> 11 usec**
Profibus	**Up to 12 Mbps**	**140 bits**	**> 12 usec**
Ethernet 100BaseTX	**100 Mbps**	**300 bits**	**> 3 usec**
RS-485	**0 to 50 Mbps**	**1 bit**	**> .02 usec Depends on protocol**

Electrical Characteristics

Standard	Driver Output	Receiver Sensitivity	Signal Margin	Typical Cable Attenuation	Media-loss cable length limit (typical)	Protocol network length limit
RS-485	1.5 V	200 mV	17.5 dB	2.5 dB/100m @ 0.5 MHz	700 m@ < 0.5 Mbps	None
				10 dB/100m @ 10 MHz	175m @ 10 Mbps	
Interbus	Same as RS-485					200m per loop @ 0.5 Mbps
Profibus DP	2.1 V	200 mV	20.4 dB	6 dB/100m @ 12 MHz	340m @ 12 Mbps	100m @ 12 Mbps
						1200m @ <94 kbps
ControlNet (Coax)	8.2 Vpp	510 mVpp	24 dB	2 dB/100m @ 10 MHz	1200m @ 5 Mbps	< 1000m
DeviceNet	1.5 V	400 mV	11.5 dB	1.2 dB/100m @ 1 MHz	950m @ < 0.5 Mbps	500m @ 125 kbps
						250m @ 250 kbps
						100m @ 500 kbps
Ethernet 10Base-T	2.2 V	585 mV	11.5 dB	10 dB/100m @ 10 MHz	115m @ 10 Mbps	Typically 100m
Ethernet 100Base-TX	1.0 V	1 Vpp	6 dB	15 dB/100m @ 10 MHz	40m @ 100 Mbps	Typically 100m

Node Count for Standard Buses

Standard	Constraint mechanism on the number of nodes	Maximum allowable nodes
RS-485	**Total current loading on the active driver**	**32 Unit Loads[1] (up to 256 nodes)**
Profibus DP	**Total impedance per segment**	**32 devices per segment**
Interbus	**Point-to-point propagation delay**	**63 devices per loop**
ControlNet (Coax)	**Impedence and signal reflections**	**48 per segment**
DeviceNet	**Specified by the standard**	**64**
Ethernet	**Interconnection hierarchy**	**Star arrangement (typical) depends on protocol choice**

[1] The unit-load specified by the TIA/EIA-485-A standard (RS-485) specifies a hypothetical current-voltage loading unit as a basis of transceiver comparison. RS-485 transceivers are available with ratings of 1/8 unit load, allowing up to 8 x 32 or 256 transceivers on a single bus, without exceeding the standard.

- **Which industrial networks does Texas Instruments support today?**

DeviceNet

- DeviceNet is based on the Common Industrial Protocol (CIP) upper-layer protocol
- Installed base: approximately 3.5 million nodes (total for all CIP networks)
- Topology: linear (trunk with droplines)
- Physical media: twisted-pair for signal and twisted-pair for power (24V)
- Max. devices on a trunk: 64 nodes
- Data Rate: 500 kbps, 250 kbps or 125 kbps
- Max. distance: 500 meters at 125 kbps, depends on rate
- Communication method: peer-to-peer and master/slave option
- Data packet size: 0-8 bytes variable
- Supporting device: SN65HVD1050, ISO1050

Interbus

- Developer/support organization: Phoenix Contact and Interbus Club
- Installed base: 6.5 million nodes
- Topology: segmented with T-drops, active ring
- Physical media: twisted-pair, fiber
- Max devices: 512 with 254 on a remote bus line
- Max distance: 400 meters per segment; 12.8 km total via copper wire, 80 km via fiber-optic
- Communication method: master/slave with total frame transfer
- Transmission speed: 500 kbps at full duplex
- Data packet size: 1-64 bytes data, 246 bytes parameter, 512 bytes HS
- Cycle time: 1.8–7.4 msec
- Supporting devices:
  e.g. SN65LBC179, SN65HVD179 or SN65HVD379

Profibus

- www.profibus.com
- Versions: Profibus-PA, Profibus-DP, Profinet, ProfiSafe
- Developer/originator: Siemens AG
- Support organization: Profibus Nutzerorganisation e.V. (PNO) and the Profibus Trade Organization (PTO)
- Installed base: more than 10 million nodes (2004)
- Topology: line, star, ring, or bus
- Physical media: twisted-pair or fiber
- Max devices: 127 nodes in four segments
- Max distance: 100 meters between segments at 12 Mbps, or 12 km with fiber
- Communication method: master/slave, peer-to-peer
- Transmission properties: 500 kbps, 1.5 or 12 Mbps for Profibus DP; 31.25 kbps for Profibus PA
- Data packet size: 256 bytes
- Supporting device: SN65HVD1176 + ISO7xxx or ISO1176

Other networks we support:

- CAN bus networks
  - CANopen
  - CAN Kingdom
- RS-485 networks
  - EnDAT (encoders, Heidenhain)
  - BACnet (Building automation)
  - CC-link
- HVD SCSI
  - Parallel bus (Data storage)
- USB, RS-232, etc.
- ControlNet
- ModBus

Industrial Ethernet

What's different to TCP/IP-Ethernet?

- **Temperature range: -40..85 (125)^{O}C**
- **Low power-consumption/-dissipation**
- **Timing requirements:**
  - **Low Latency**
  - **Deterministic Latency**

Most common "flavors":

- **ProfiNet**
- **EtherCAT**
- **SercosIII**
- **EthernetPowerlink**
- **Ethernet/IP**

Supporting devices: TLK100

EtherNet/IP

- EtherNet/IP came about through the combined efforts of ODVA, ControlNet International, and Rockwell Automation.
- EtherNet/IP (Ethernet industrial protocol) implements data transfer using common industrial protocol (CIP)
- It operates on commercial Ethernet but uses alternative physical wiring and connectors more suitable to industrial automation.
- The objectives of EtherNet/IP are to provide a full industrial-grade data communications service, using as much commercial off-the-shelf Ethernet hardware and cabling as possible.
- The benefits are to obtain the speed of Ethernet at the lowest cost possible stemming from broad usage in the commercial market.

ProfiNet

- ProfiNet is the Ethernet extension to ProfiBus and Interbus
- Interoperability with Profibus is key

EtherCAT – another industrial Ethernet

- **Claims:**
  - **fastest cycle times**
  - **Flexibility**
  - **Lower cost**

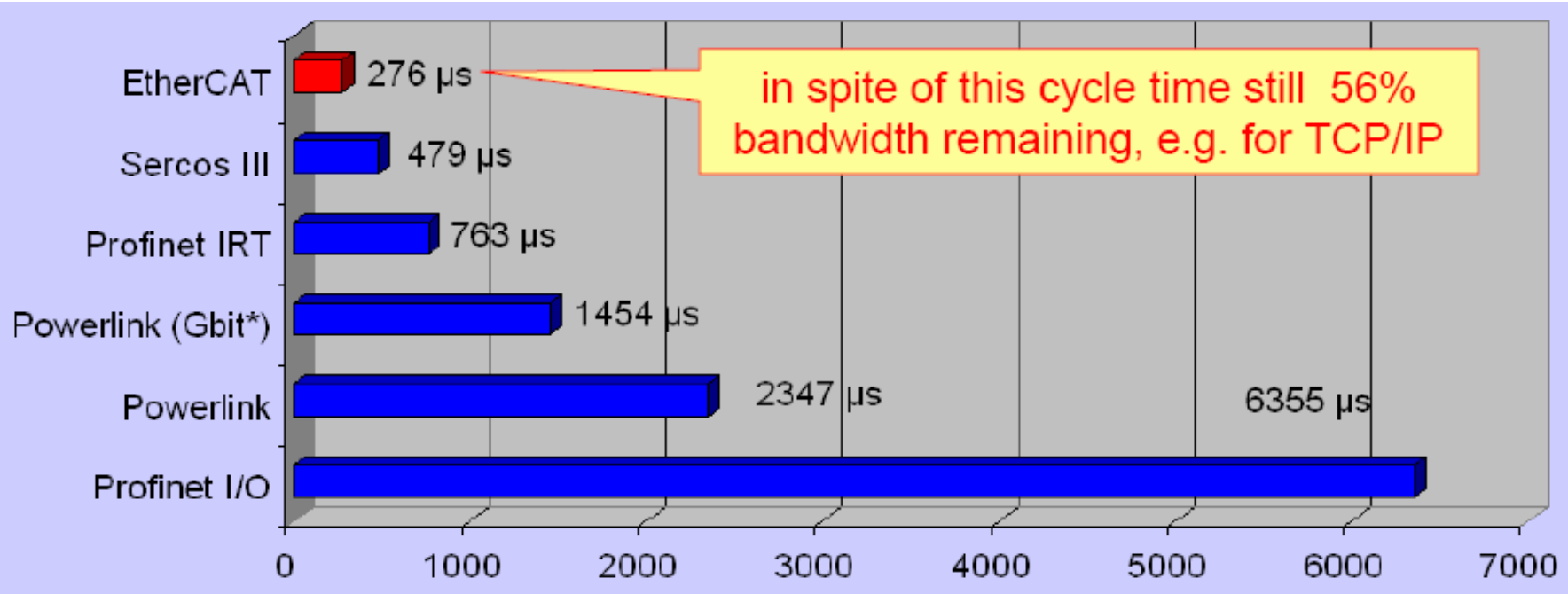

What is SERCOS?

- SERCOS is a digital motion control bus that interconnects motion controls, drives, I/Os, sensors and actuators for numerically controlled machines and systems.
- It is an open controller-to-intelligent digital device interface, designed for high-speed serial communication of standardized closed-loop real-time data over a noise-immune, fiber optic ring (SERCOS I & II) or Industrial Ethernet cable (SERCOS III).
- It can connect up to 254 drives to a control using one fiber optic cable ring or a single daisy-chained Industrial Ethernet cable.
- Sercos attempts a cost-optimized solution.
- The daisy-chained loop presents a challenge to the clocking architecture!

Industrial Ethernet Roadmap

TLK100
10/100 PHY
Single Port, 85C

10/100BaseT-Transceiver
Timing supporting
- ProfiNet
- EtherCat
- Powerlink (tbc)

MII Interface
Samples: now

Potential portfolio extensions

Multichannel-versions
FX (fiber optic) support
Gigabit-Ethernet
Cable diagnostics
ESD protection
Small package
Lower power
125oC operation
MII/RMII-Interface
IEEE 1588

MAC, MAC+PHY (see Luminary)

Sensor/Actuator Interfaces

- 4..20mA / 0..20mA
- 0..10V / -10..10V
- HART
- AS-i
- IO-link

TI solutions for 4-20mA

- **XTR1xx family of transmitters**
- **RCV420 precision receiver**
- **XTR300 universal 4..20mA/+/-10V IF**

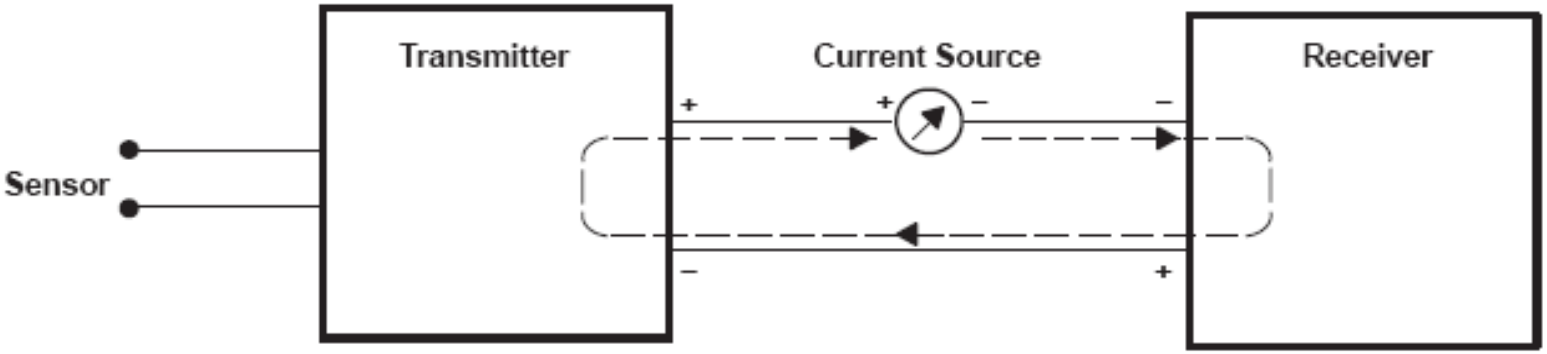

Figure 1. Example of a Current Loop

HART
(Highway-Addressable Remote Transducer)

- Developer/support organization: HART Communication Foundation (HCF)
- Installed base: more than 14 million HART-enabled devices
- Topology: variety of point-to-point and multi-drop network configurations
- Physical media: same as 4-20 mA wiring, no terminators needed
- Max devices: point-to-point recommended, but can multi-drop up to 15 devices for some applications
- Max distance: 3,000 meters, but can use repeaters
- Communication method: analog 4-20 mA, plus two-way digital master/slave
- Transmission speed: analog 4-20 mA, which is instantaneous, always present, with no transport lags or synchronization time
- Cycle time: 500 msec for digital

HART technology

- **Digital modulated onto analog (FM on 4-20mA)**

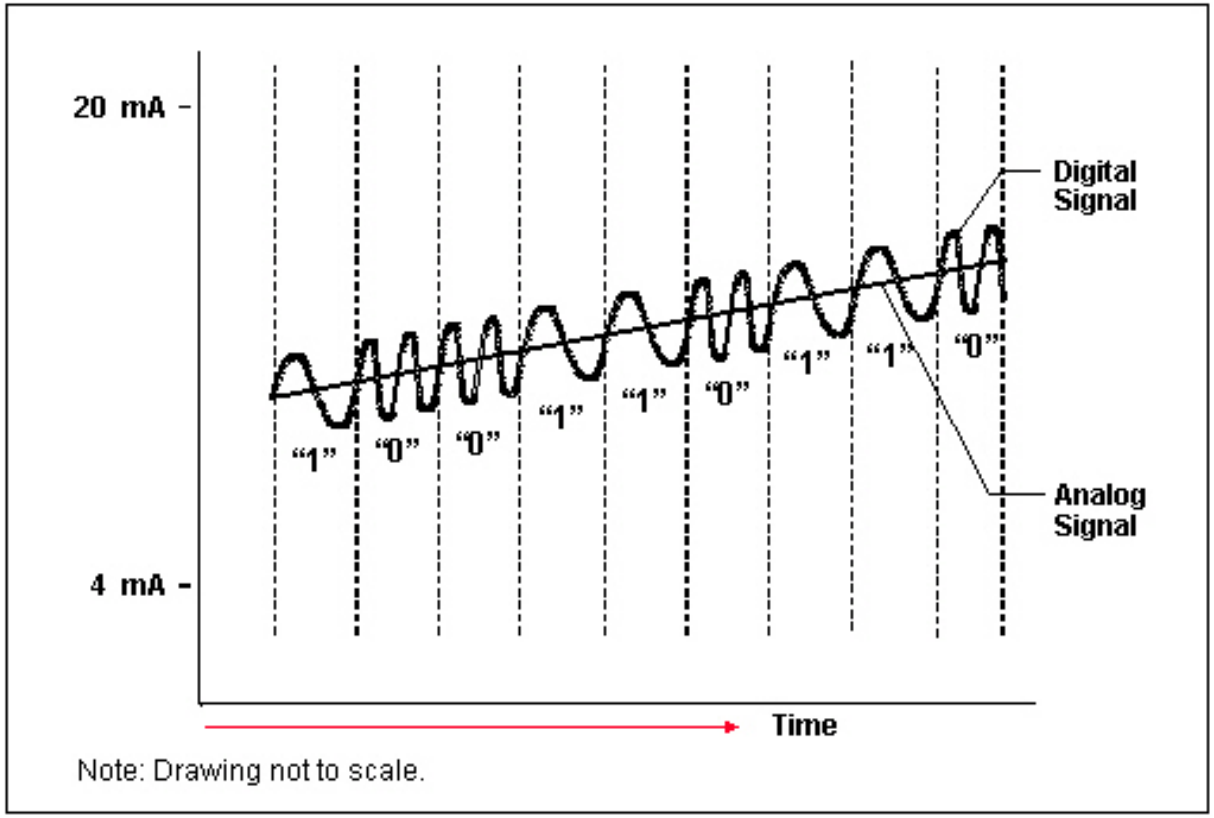

Actuator Sensor-Interface (AS-i)

- Developer/support organization: AS-i International
- Installed base: 5 million nodes
- Topology: Bus, ring, tree star
- Physical medium: Two-wire cable
- Max devices: 31 slaves
- Max distance: 100 meters, 300 m with repeaters
- Communication method: master/slave with cyclic polling
- Transmission speed: always on, same as analog 4-20 mA
- Data packet size: 4 bits
- Cycle time: 5 msec

IO-Link

- What is IO-Link?
  - Traditionally, Sensors and actuators have so far been connected to control devices via either digital (24 V) or analog (4…20 mA, +/-10 V) signals.
  - Programmability, Calibration, etc. in the field requires a bidirectional communication: IO-link

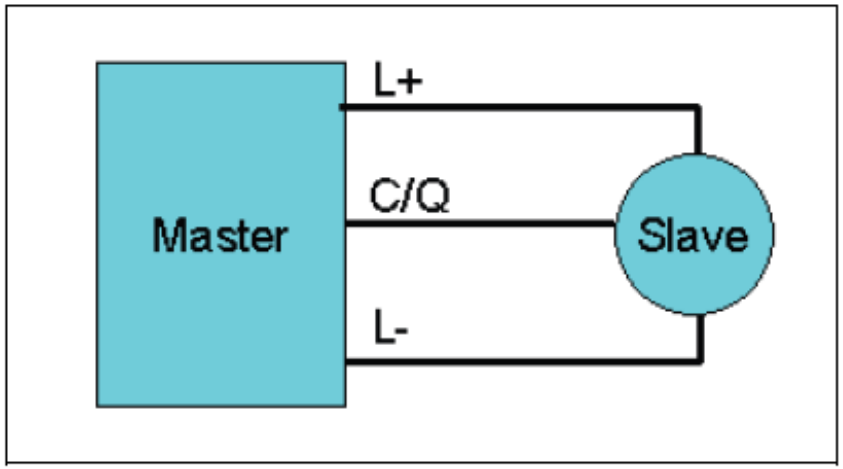

- Key advantages of IO-Link
  - All on one cable:
    process/parameter/diagnostic data on a single cable
  - Backwards compatible and flexible:
    Combine IO-Link and non IO-Link together
  - Low cost deployment: Low cost un-shielded cables
  - Easy fieldbus integration: Fieldbus neutral protocol

Technical Data

- Standard IO connection technology, point to point connection, unshielded, 20 m cable length
- Cyclic process data transmission in 2ms
- Simultaneous communication of process data and service data without influence on equidistance of process data
- Mixed operation with standard sensors / actuators possible
- 24 V pulse modulation, standard UART protocol

Digital PLC Input :SN65HVS88x

HVS88x Industry's most compact serializer solution

Higher integration, saves 60% more board space

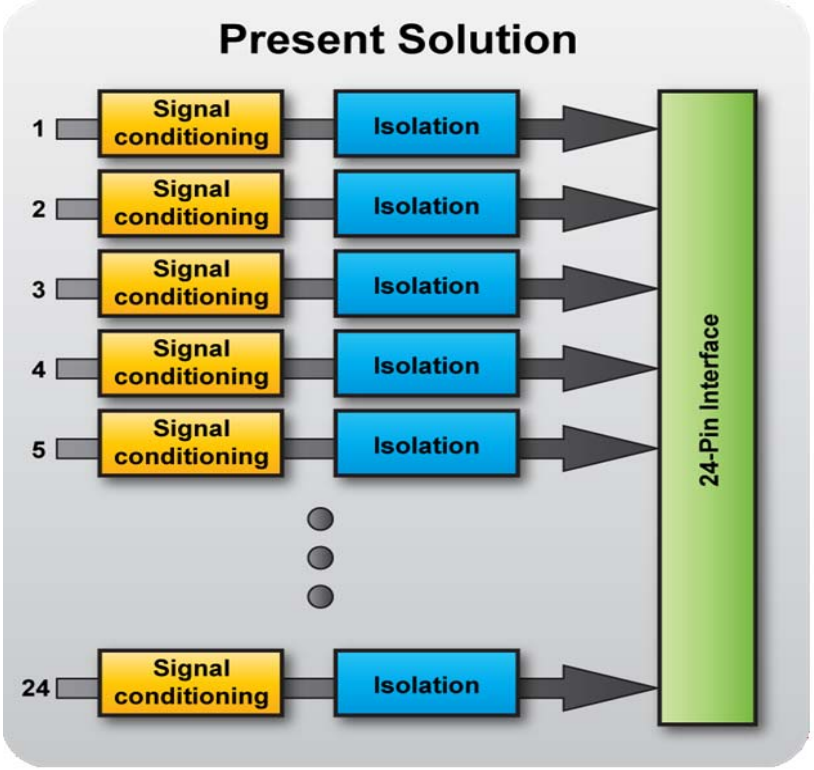

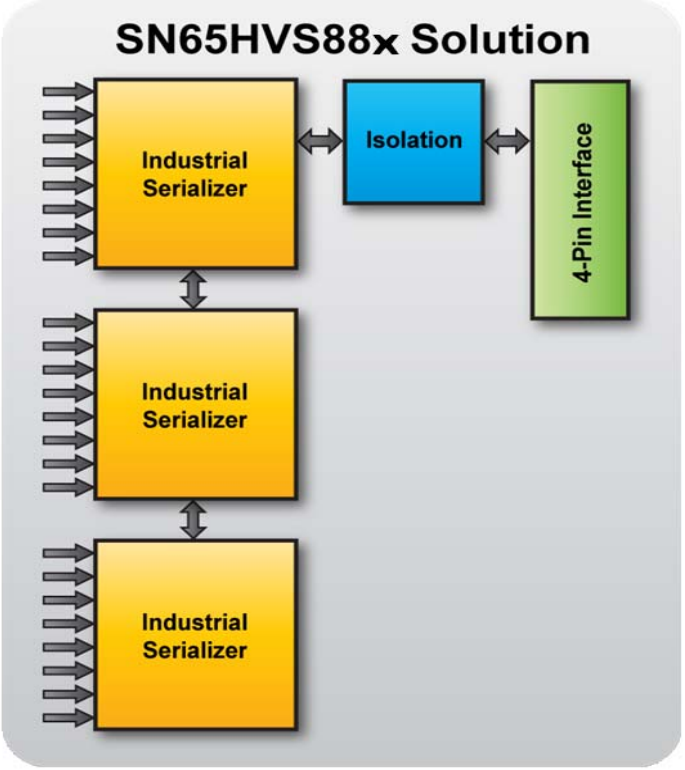

- The SN65HVS88x converts eight digital inputs, ranging from 0 V to 34 V, into a single data stream on SPI interface.
- Several serializers can be cascaded together on a single 4-wire SPI interface for over 160 inputs.

SN65HVS880

18V – 30V Industrial 8 channel Digital Input Serializer

Features

- Eight Digital 0-30V Inputs
- Operating Voltage from 18V to 30V
- -40 to 85ºC Operating Temperature
- Selectable Debounce glitch Filter 0 to 3ms
- Adjustable Current-Limited Inputs
- 15kV ESD protection
- Status LED outputs
- Cascade HVS880 for >160 inputs
- SPI Interface
- Regulated 5V @ 50mA Power Output
- Under Voltage Detect

Benefits

- Highest Input Density -
  - Lowest Board Space – 60% less typ
  - Fewer µController I/O
- Lowest System Power – 75% less typ
- Highest level of Integration

All this in
6.4mm x 9.7mm

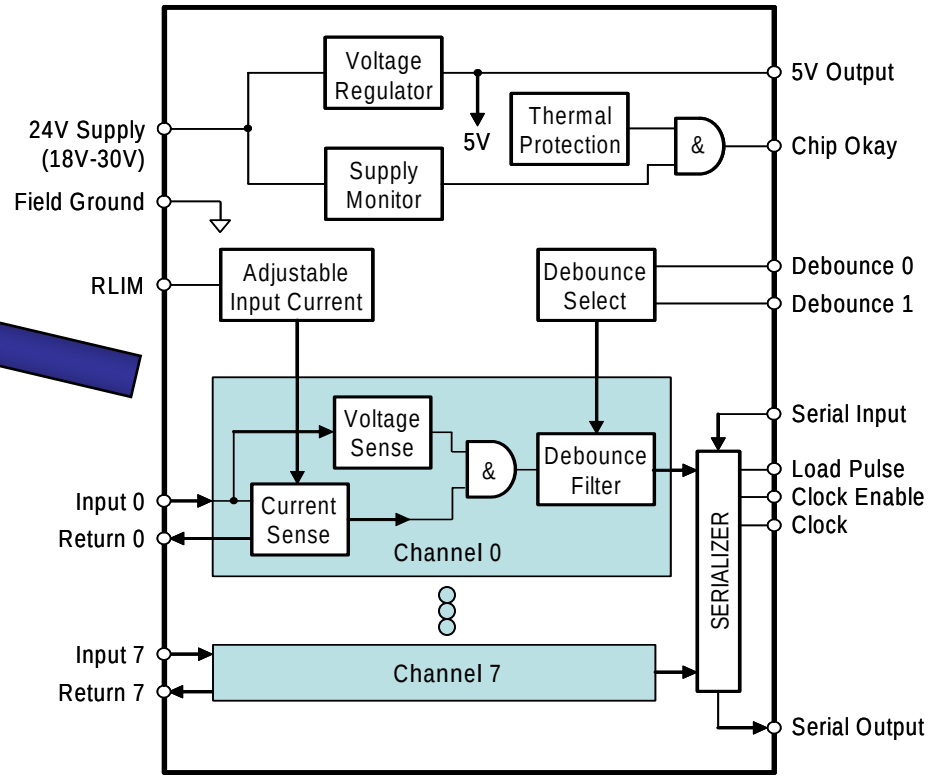

Applications

- PLC Digital Input Modules
- Sensor Inputs for Industrial Automation
- Motion Control Systems
- HVAC, Elevators
- Assembly and Test

EVM

ISO EVM – ISO880EVM

HVS88x Family

	SN65HVS880	SN65HVS881	SN65HVS882	SN65HVS885
Operating VCC Voltage(V)	18V - 30V	10V – 34V	10V – 34V	4.5V - 5.5V
I/O Vol	0-30	0-34		
Interface	SPI			
No. of Inputs	8			
I/O max rate(kbps)	1000			
Debounce times(MS)	0,1,3			
IO Current (mA)	0.2-5.2			
Low Voltage Monitor	Yes	No		
Parity	No	Yes	No	No
Over temperature	Yes			
Pin/Package	28HTSSOP			
Operating Temp Range(C)	-40 to 85	-40 to 125		
Price	$2.75	$3.10	$3.00	$2.70
	PLC Voltage range	Parity Bit - Error Check	General purpose	Applications with 5V VCC

Capacitive Isolation

Why Isolation?
Common Mode Noise

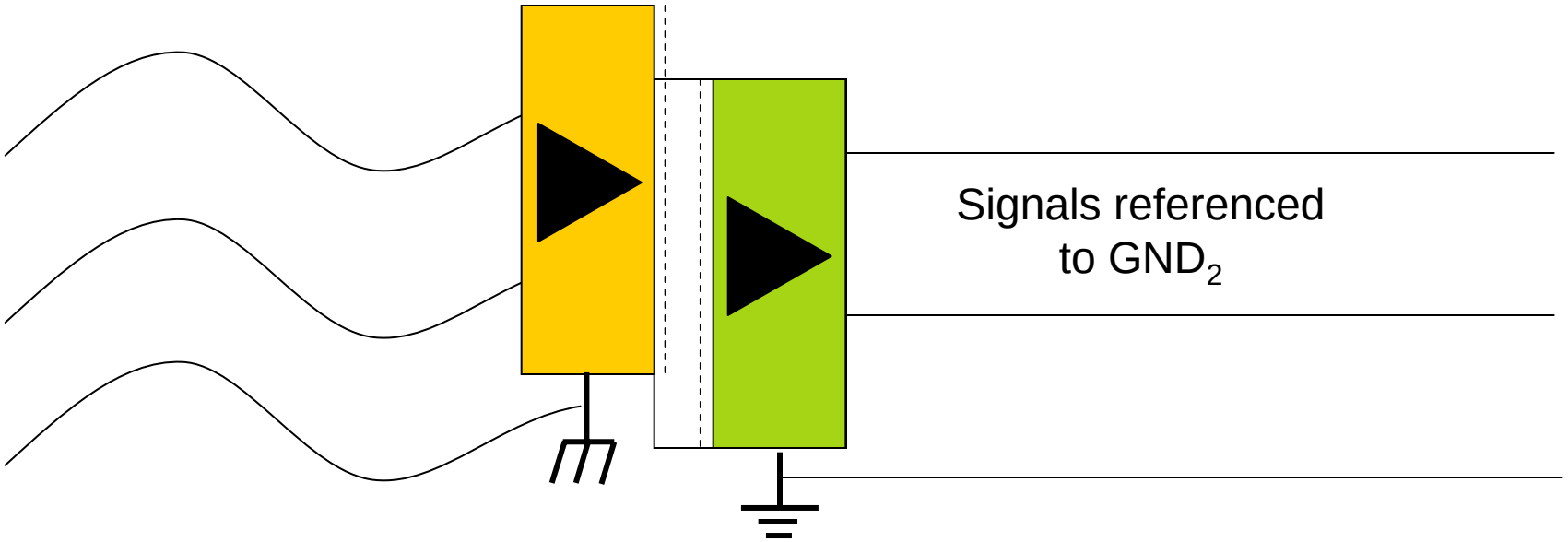

Signals referenced
to GND_1

Basic/Functional Isolation vs. Reinforced Isolation

"An improved basic insulation with such mechanical and electrical properties that, in itself, the insulation provides the same degree of protection against electrical shock as double insulation. It may consist of one or more layers of insulation material." [UL-60950-1]

Basic/Functional Isolation vs. Reinforced Isolation (cont'd)

When is Reinforced required:

- **6kVpp systems (e.g. 600V IGBTs/FETs)**
- **Today: all Medical applications (5kVrms!)**
- **Future: Medical applications for isolation from the patient**

Note: this is not complete and subject to change. Exceptions may apply!

Applications utilizing Isolation

Industrial:

- **Robotics**
- **PLC input/output isolation**
- **Industrial networks**
- **Motor control**
- **Power supplies**

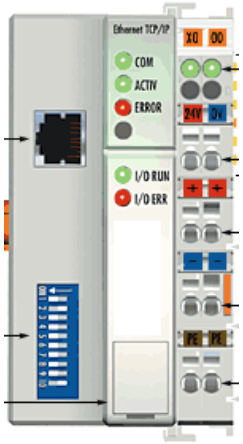

Primary Task:
Isolation between High-Power and Control Signals
Isolation of Bus-Nodes to prevent Corruption
of the complete Bus & Common Mode Rejection

Applications utilizing Isolation

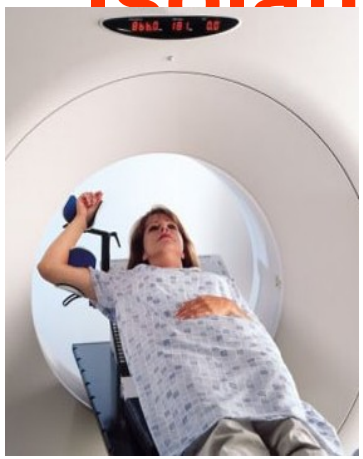

Medical:

- Microwave therapy
- Patient monitoring
- Electrocardiographs
- Defibrillators

Communications:

- PBX (Private Branch Exchange) and central office
- Telephone terminal equipment
- Telephone switching equipment
- Modems
- ISDN
- Ethernet / PoE

Primary Task:
Medical:
Isolation between Power and Patient
Communications:
Isolation between Power and Caller
Isolation of Bus-Nodes to prevent Corruption of the complete Bus

Applications utilizing Isolation

Consumer Electronics:

- Video (TV, VCR, etc.)
- Plasma displays
- Electronic gaming
- Home appliances

Primary Task:
Isolation between High-Power and User

Computers & Office Equipment

- Isolated I/O
- Printers and plotters
- Fax machines

Nomenclatures / Definitions (1/3)

- Operation Voltage:

  Voltage that may be applied continuously across the Isolation barrier, mostly 560Vpk or 890Vpk
- Transient Voltage:

  Voltage that may occur temporarily across the barrier (tested per VDE for 1 minute), mostly 4kVpk (relates to 3kVrms per UL, as tested for 10s only) or 6kVpk
- Surge Voltage

  Single event surge, with the assumption that all effects have been recovered from prior to another surge-event, mostly rated for a 10kV single peak.

Nomenclatures / Definitions (2/3)

- Basic / Functional Isolation:

  Assumes a single level of isolation with a certain strength. Applicable for most applications in industrial for fieldbusses and AC-equipment up to 400Vrms, and for consumer electronics. Mostly rated at 560Vpk continuous, 4kVpk transient voltage.

- Reinforced / Double Isolation:

  Double Isolation assumes a two-level isolation with a certain strength each. Reinforced addresses a single level of isolation that, however, provides the same reliability as the two-layer. Applicable for most medical applications and AC-equipment above 400Vrms. Mostly rated at 890Vpk continuous, 6kVpk transient , 10kV surge voltage. Medical needs 5kVrms transient.
  Intrinsically safe Applications demand double isolation.

Note: the End-equipment-standard (e.g. IEC-60950 for communications or IEC-60601-1 for medical) dictates what is needed on silicon level

Nomenclatures / Definitions (3/3)

- Common Mode Transient Suppression:

Discusses the quick change in Reference potential primary to secondary. It's given as the dU/dt at which no false toggeling of the output will occur (e.g. 35kV/us). Usually scales ~ linearly with Vcc.

- Creepage and Clearance

Discusses the surface-distance that may conduct if wet/polluted, respectively the air-distance. For 560V/4kV mostly 5mm is sufficient, for 890V/6kV mostly 8mm is needed. Depends on pollution degree

5 Questions…

… to allow educated solution-proposals

1. Isolation strength:
   basic/reinforced?
2. Isolation voltage:
   4kVpeak, 560Vpeak continuos /
   6kVpeak, 890V peak continous?
3. Stand-alone isolation or integration
   (Transceiver, Gate-Driver, Data-Converter)?
4. Supply Voltages?
5. Channel-count?

New Generation Capacitive Isolation

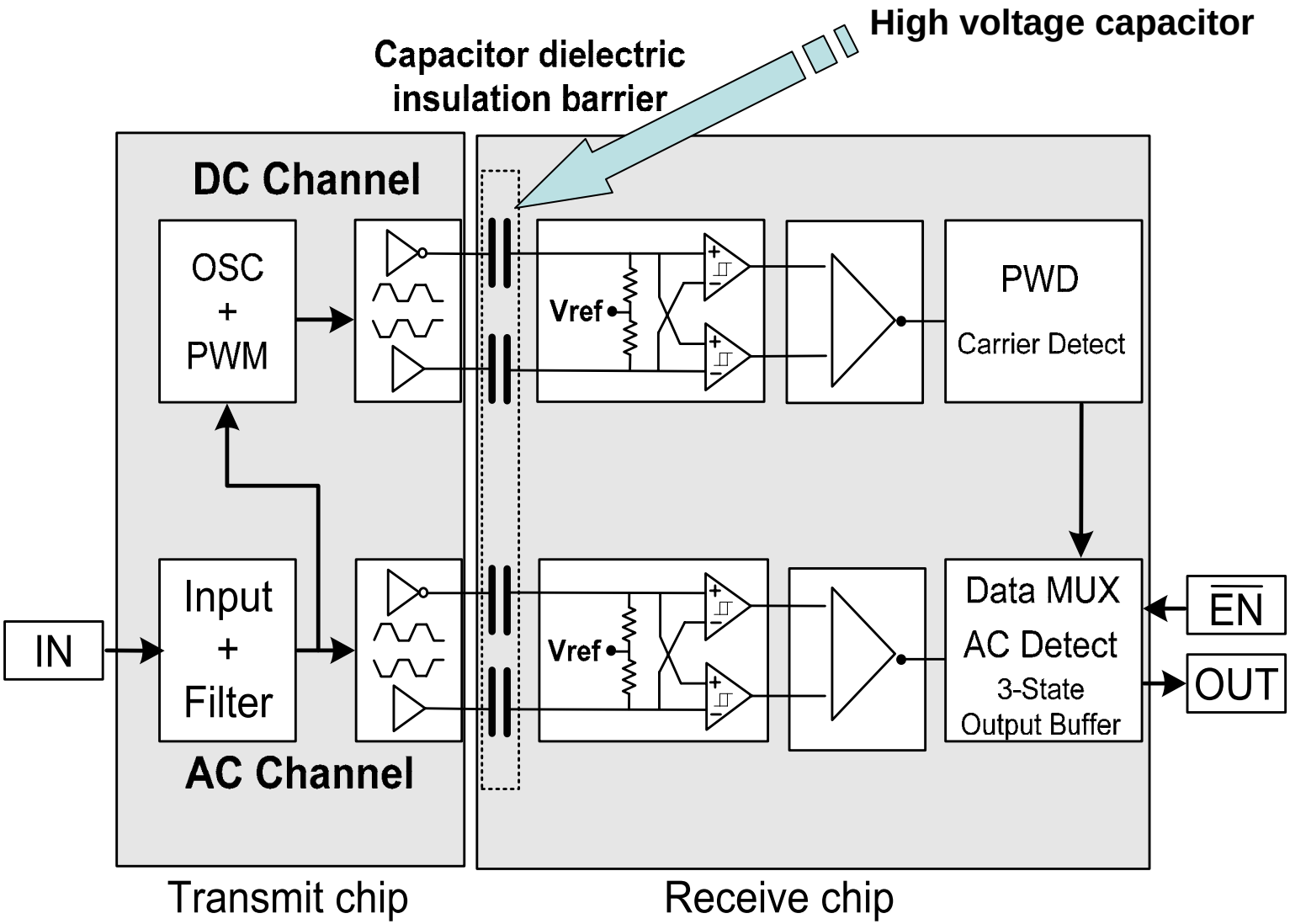

Isolator construction

Creepage distance: Shortest distance between two conductive input to output leads measured along surface of insu

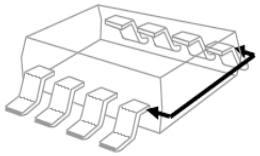

Clearance distance: Shortest distance between two conductive input to output leads measured through air (line of sight).

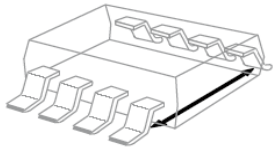

Package/ designation	Creepage mm	Clearance mm
Narrow body SOIC/ D	4.8	4.3
Gull wing / DUB	6.8	6.1
Wide body SOIC/ DW	8.1	8.3

Note: Package-changed and now allows 8.3mm min !

High Voltage Capacitor Construction

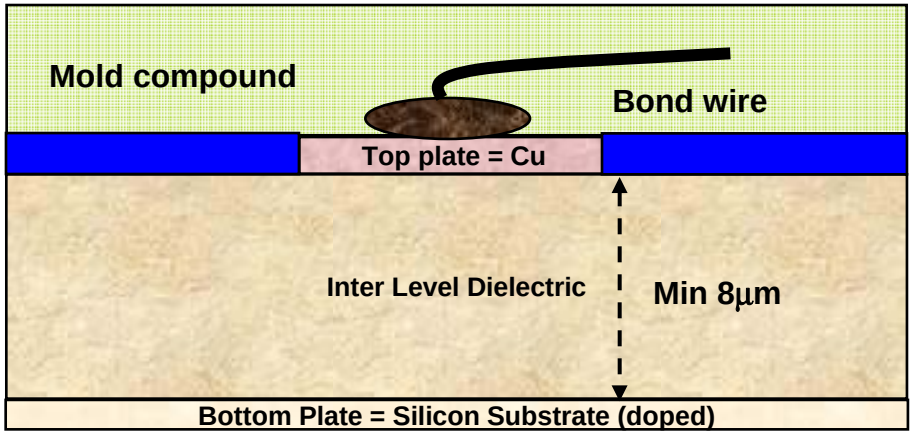

Cross Sectional View

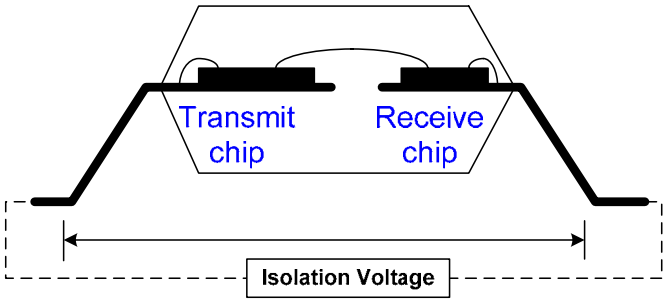

Actual Die-Picture

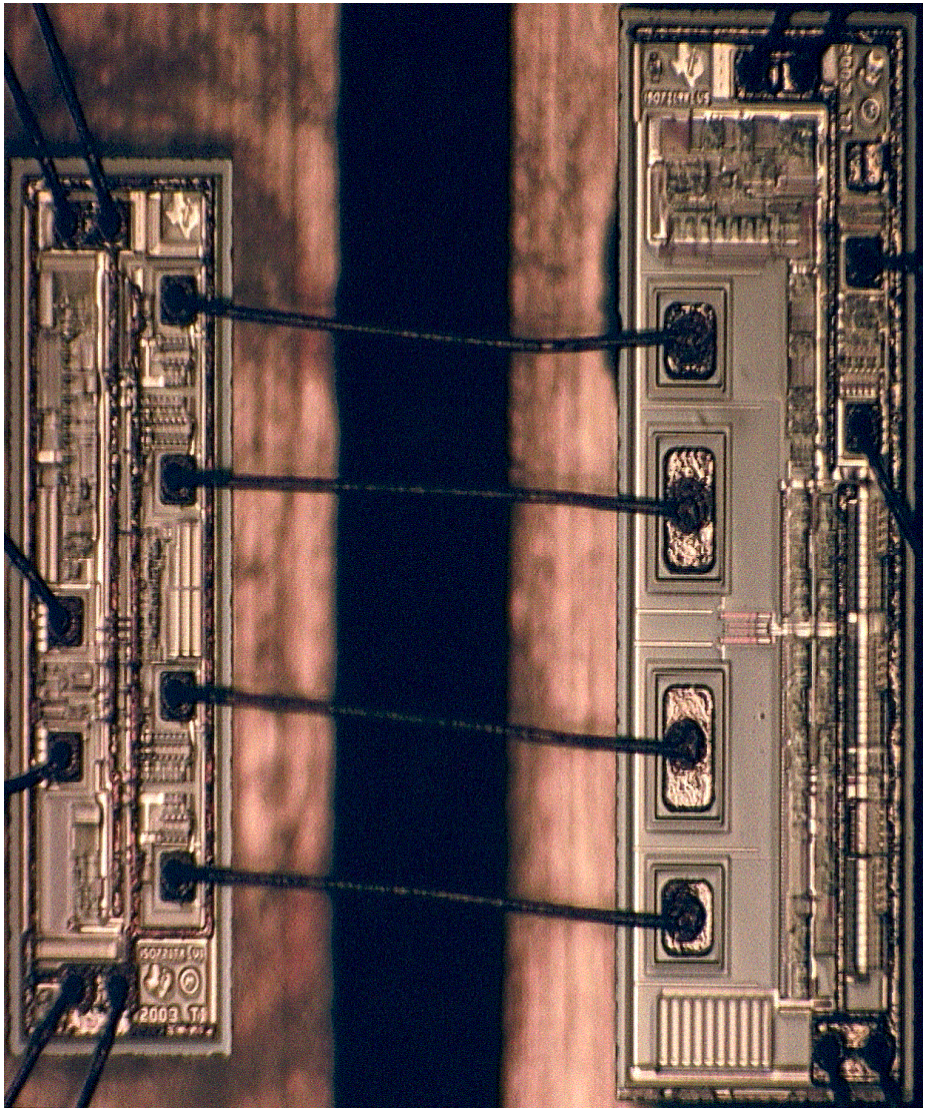

It’s all capacitive

Source: TI App note SLLA198 www.ti.com/iso721

Capacitive

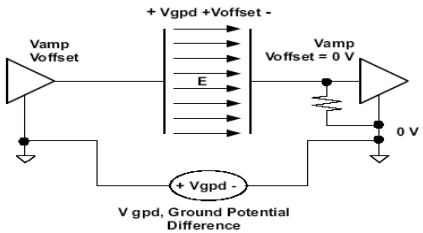

Inductive

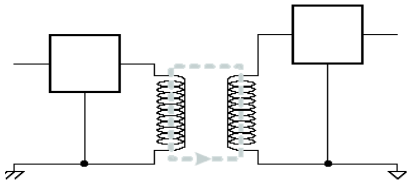

GMR

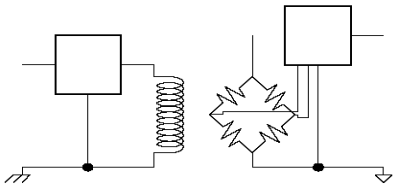

Optical

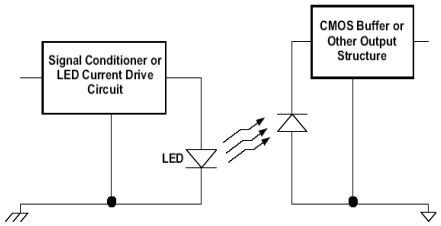

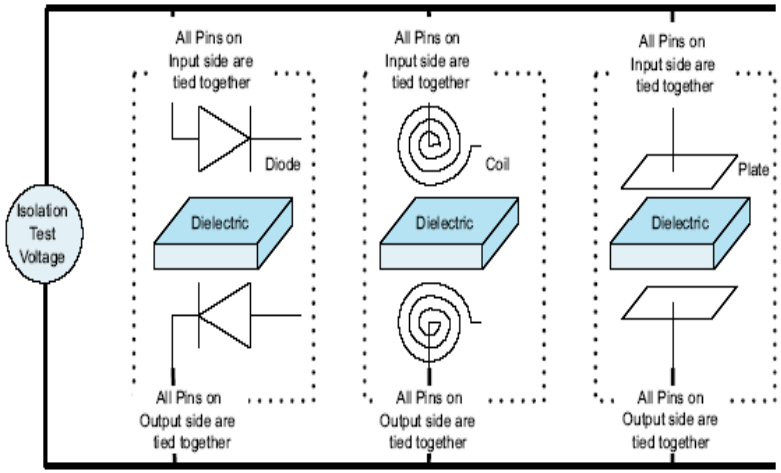

	Capa-citive ISO72xx	Inductive ADuM 1xxx	GMR IL7xx	Optical HCPL-07xx
C_{IO}	1 pF	1 pF	1.1 pF	0.6 pF
ε, material	SiO_2 =4.5	Poly-imide =2.8	Poly-imide =2.8	Mold comp. =3.6

All isolated couplers can be modeled as I/O and capacitive coupled (active or parasitic)

Competitive Comparison Reliability

Source: TI App note SLLA198 www.ti.com/iso721

			Typical, 60% Confidence		Typical, 90% Confidence	
Part	Coupling Technology	Ambient Temperature (°C)	MTTF (Hr/Fail.)	FITs (Fail./10^9 Hr)	MTTF (Hr/Fail.)	FITs (Fail./10^9 Hr)
ISO721	Capacitive	125	1,246,889	802	504,408	1983
HCPL-0900	Inductive	125	288,118	3471	114,654	8722
HCPL-0721	Optical	125	174,617	5727	69,487	14,391

Less than 10 years lifetime expected at 90% confidence

2x test time indicates much lower dppm (only raw data available for ADI)

Part	Coupling Technology	Junction Temperature (°C)	Duration (Hr)	Sample Size	Rejects
ISO721	Capacitive	$150<T_J<175$	1000	344 (3 lots:116,116,112)	0
ADuM1100	Inductive	$150<T_J<175$	500	231 (77 from 3 lots)	0

Competitive Comparison
High Voltage Lifetime

Source: TI App note SLLA197 www.ti.com/iso721

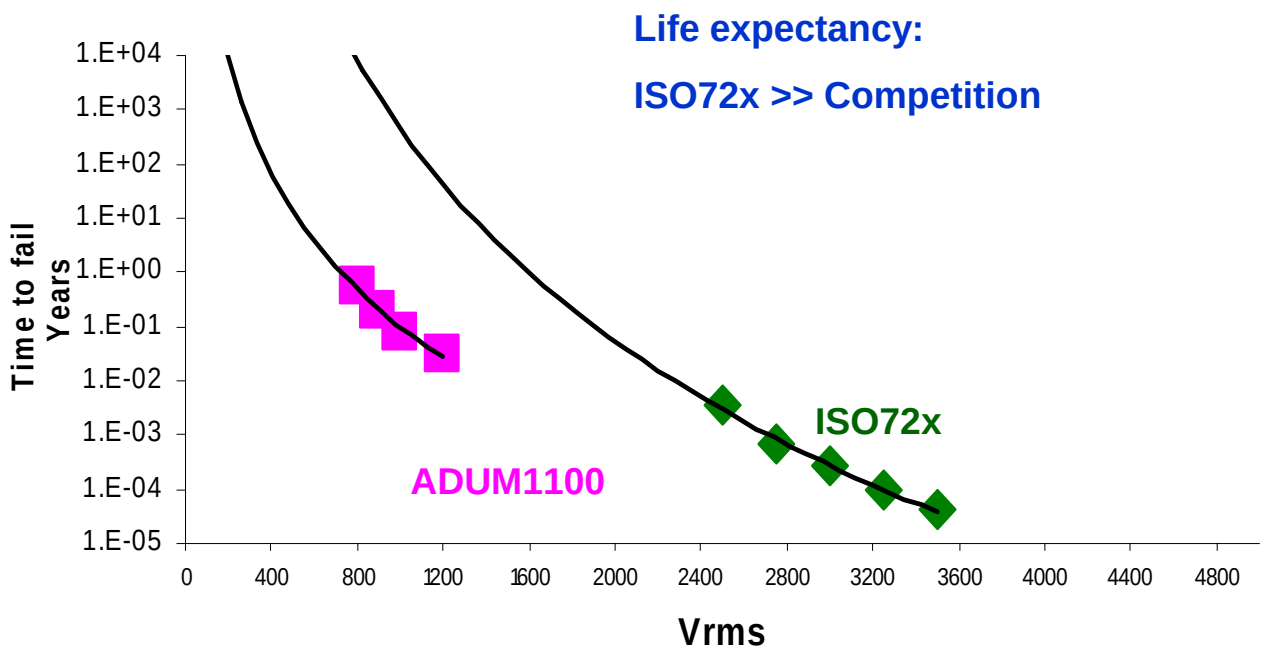

Competitive Comparison
High Voltage Lifetime

Using widely accepted E-Model methodology

Source: TI App note SLLA197 www.ti.com/iso721

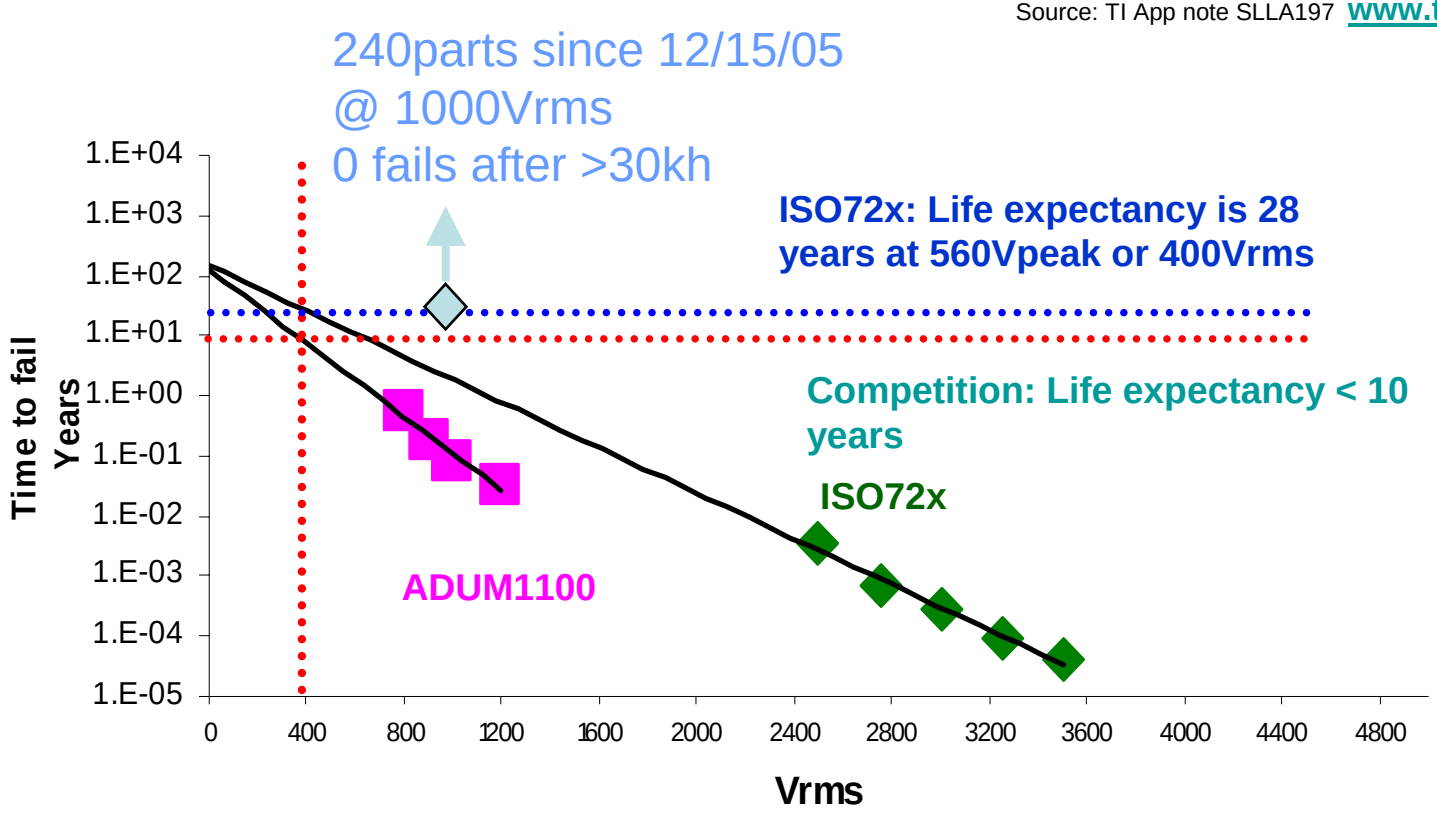

Competitive Comparison

Icc per Isolation Channel, 3.3V Vcc

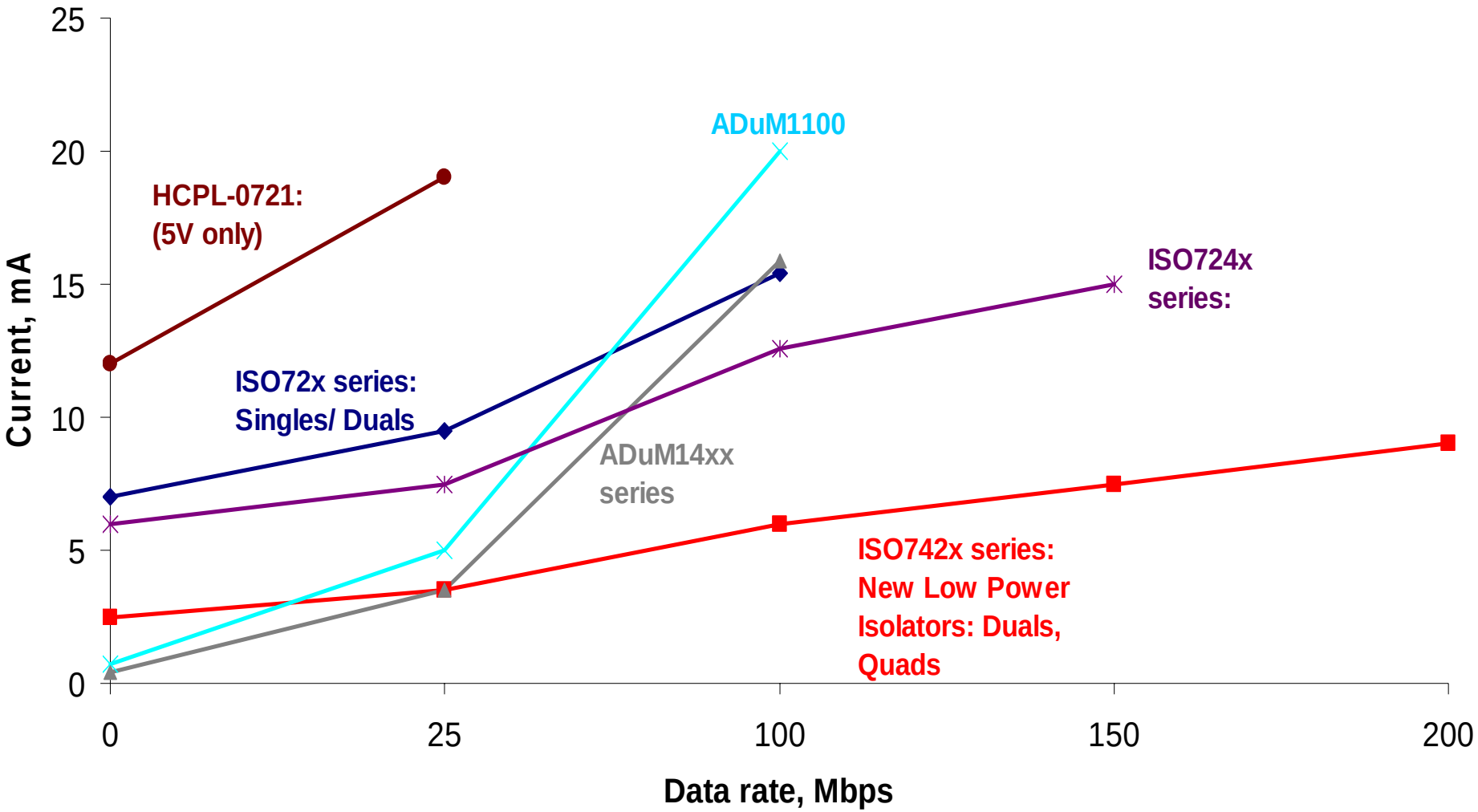

Isolated Products – Stand-Alone

Q1

Available today

Singles	Duals	Triples	Quads
ISO721/M ISO722/M	ISO7220A/B/C/M ISO7221A/B/C/M	ISO7230A/C/M ISO7231A/C/M	ISO7240A/C/M ISO7241A/C/M ISO7242A/C/M

560Vpk (cont'); 4kV pk (transient)

	Duals	Triples	Quads
560Vpk (cont') 4kV pk (transient)	ISO7420M ISO7421M	ISO7430M ISO7431M	ISO7440M ISO7441M
890Vpk+ (cont') 6kV pk (transient) 10kV (surge, tbc)	ISO7620M ISO7621M	ISO7630M ISO7631M	ISO7640M ISO7641M

ISO7421 only: RTM: 3Q09 Samples: NOW

RTM: 1Q10 (tbc) Samples: 4Q09

RTM: 1Q10 (tbc) Samples: 4Q09

Preview

Low-Power-versions, in development, pin-compatible with ISO72xx

Isolated Products – Integrated

2nd order Δ-Σ Modulator (4kV)

AMC1203
10MHz

Isolated Transceivers RS-485

ISO1176, ISO308x, ISO1x, ISO3x

Isolated CAN Transceiver

ISO1050

Isolated RS-485Transceiver with Integrated Transformer Driver

ISO1177

RTM: 4Q09
Samples: 3Q09

Isolated Gate Drivers

ISO55XX

Preview

2nd order Δ-Σ Modulator (6kV)

AMC1204
20MHz

Interfacing – what else?

Voltage Level Translation

TI's new auto-direction sensing translation devices are ideal for point-to-point topologies when interfacing devices that may or may not be operating at different interface voltage levels.
http://www.ti.com/lit/scyb018

ESD/EMI Protection

TI's stand-alone ESD Device Protection solutions provide a space-saving and cost-effective solution to protect the system interconnects from external ESD strikes.
http://www.ti.com/lit/sszb130

I²C - I/O expanders, multiplexers, buffers and repeaters

TI's new TCA family of low voltage I²C peripherals provide a single chip solution for I²C interface with next-generation low-voltage processors.
http://www.ti.com/lit/sszc003

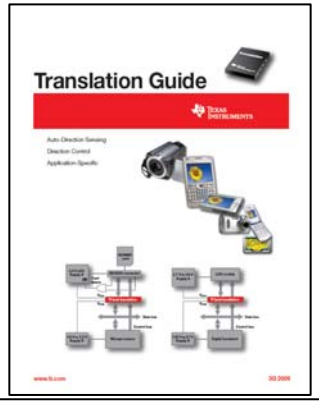

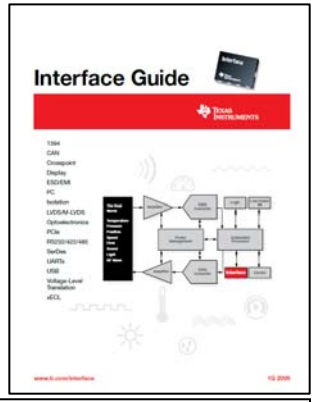

Interface Selection Guide 2009

http://www.ti.com/litv/pdf/sszt009d

Questions?

Thank you for your interest