Solutions Marketing – Renewable Energy

Drive for Renewable Energies

- Climate Change
- EU legislation
  - 2001/77/EC 20:20 goal
  - 2005/32/EC Standby and off mode directive
  - 2006/66/EC battery disposal directive
- Fossil fuel crisis

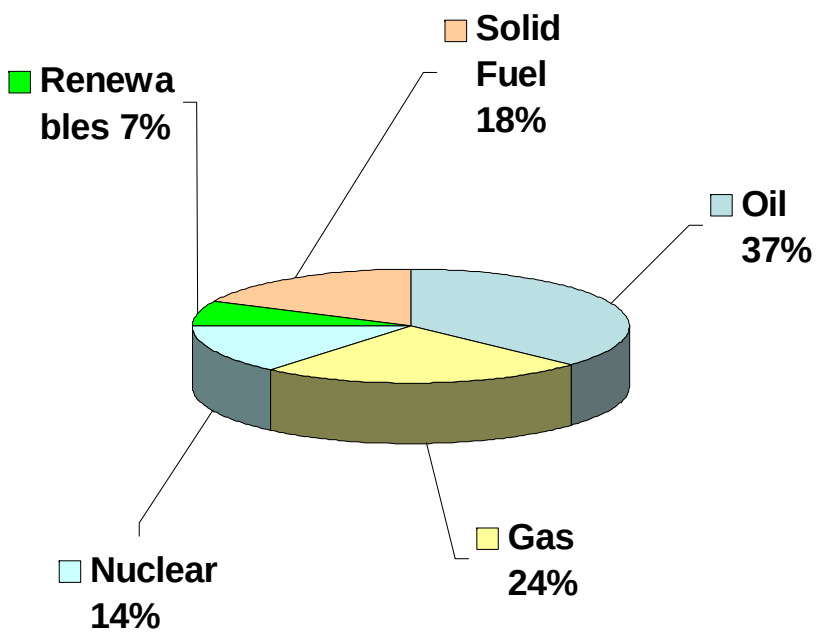

EU27, GROSS INLAND CONSUMPTION (ENERGY MIX in M to e, %) (2006)

Renewable Energies

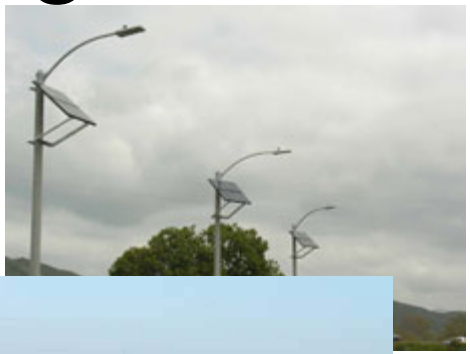

- Solar Energy Products
  - Photovoltaic systems
  - DC/AC Power inverters
  - CSP
  - DC/DC Systems
- Wind Energy Products
  - Wind Turbines
- Fuel Cells
- Hydro Energy Products
- Electric Vehicles
- Heating Systems
  - CHP
- Energy Harvesting

Agenda

- **SOLAR**
  - **Introduction**
  - **TI solutions Solar**
  - **TI MCU based Solar Development Tools**
- **WIND/FUEL CELL**
- **ENERGY HARVESTING**
  - **Introduction**
  - **TI solutions EH**
  - **TI MCU based EH Development Tools**
- **Summary**

Why Solar ?

- **Cost of electricity generated by PV systems becomes more and more competitive**
- **Technology evolution is there ! Module efficiency improves !**
- **Solar is widely supported**
  - **By industrials : it is a profitable business**
  - **By politicians : REN 2020 goal**
  - **By customers : Feed-in tariff !**
  - **By several associations :**

SEIA - The Solar Energy Industries Association

JPEA – The Japan Photovoltaic Energy Association

EPIA – European Photovoltaic Industry Association

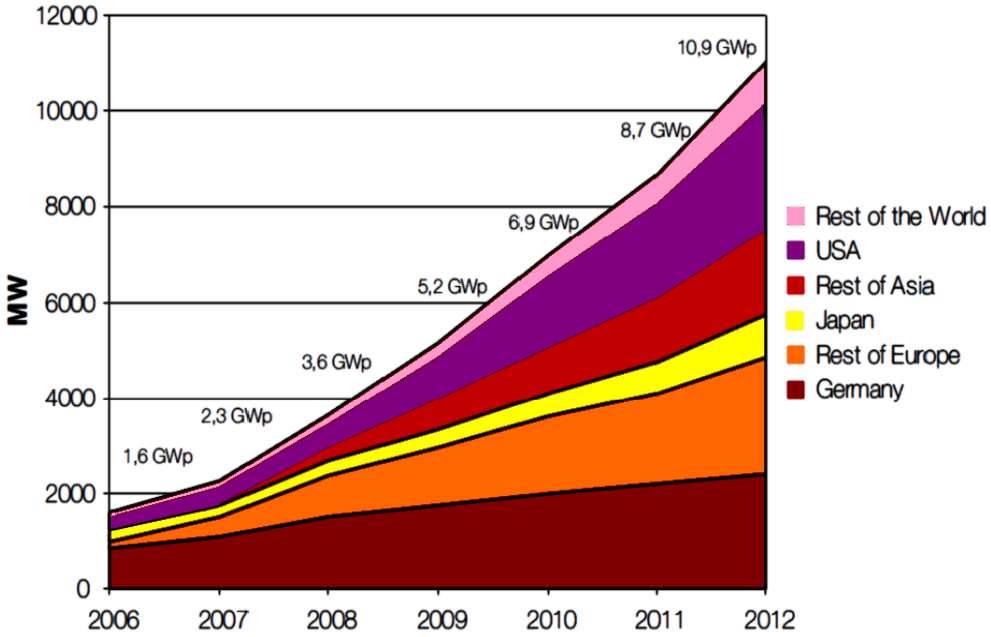

Source: EPIA 2008

Solar Topologies

Small ***Stand-Alone*** System

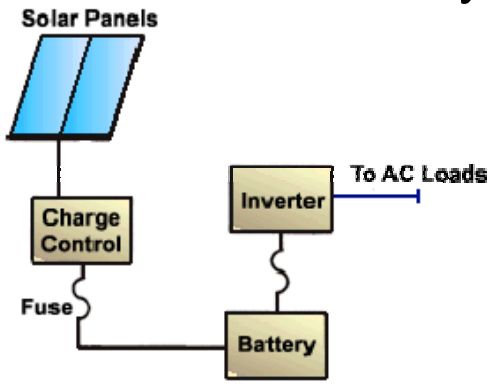

Grid-tie Photovoltaic System

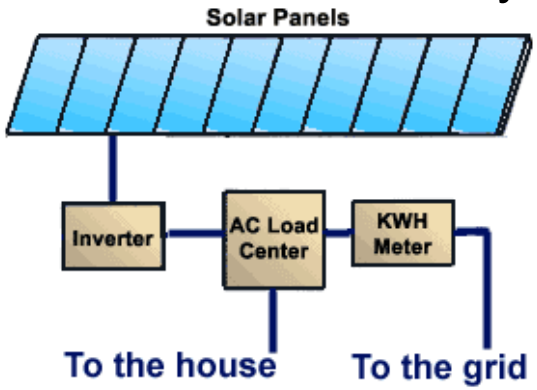

Complete ***Stand-Alone*** Photovoltaic System

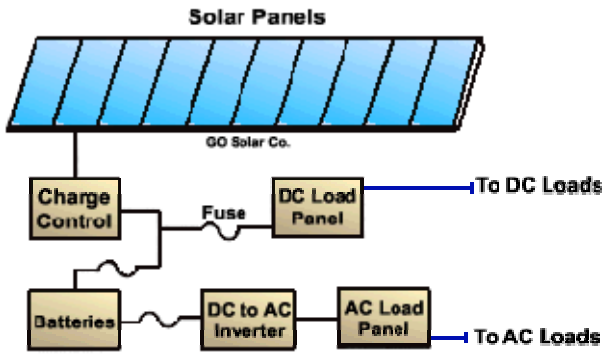

Hybrid - Photovoltaic and Generator Combination System

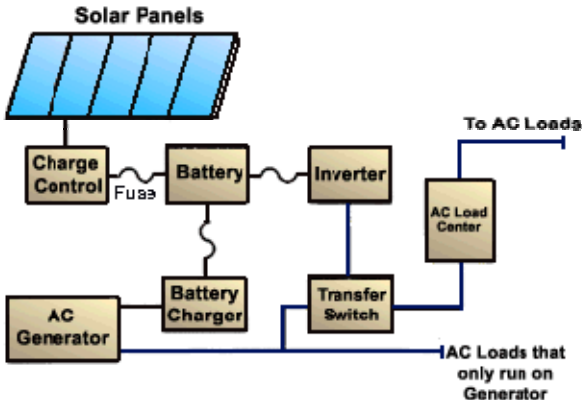

Introduction into Photovoltaic Systems – Solar Inverter Tasks and Functions

- Solar inverters generate a sinusoidal AC waveform at a fixed level from a DC source with varying voltages
- The output voltage needs to be at a certain level as well as the frequency (e.g. 230 V at 50 Hz for low range grid voltage systems in Europe). If the inverter is connected to the power grid, voltage and frequency need to be synchronized with the power-line!
- Operating the solar panels in their maximum power point to ensure optimal efficiency.
- Monitoring changes in power grid to prevent damages/ dangers by disconnection the inverter from the mains.
- Communication features:
  - Power-line communication (signals need to pass through 2 eMeters!)
  - Wired communication e.g. RS485, RS232, Ethernet and CAN
  - Wireless communication e.g. Bluetooth
- Data-logging, especially for large applications.
- Battery charging, conditioning.

DC/AC Stage

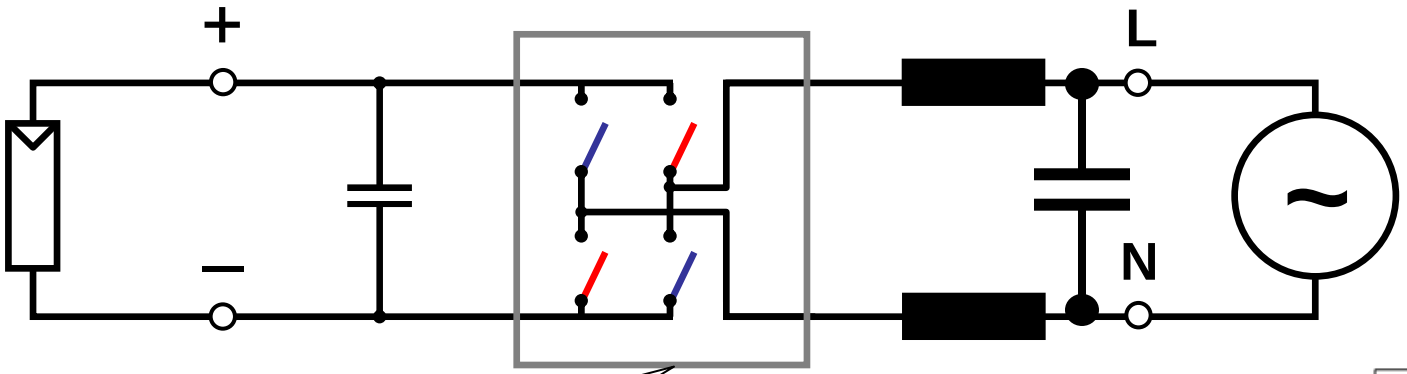

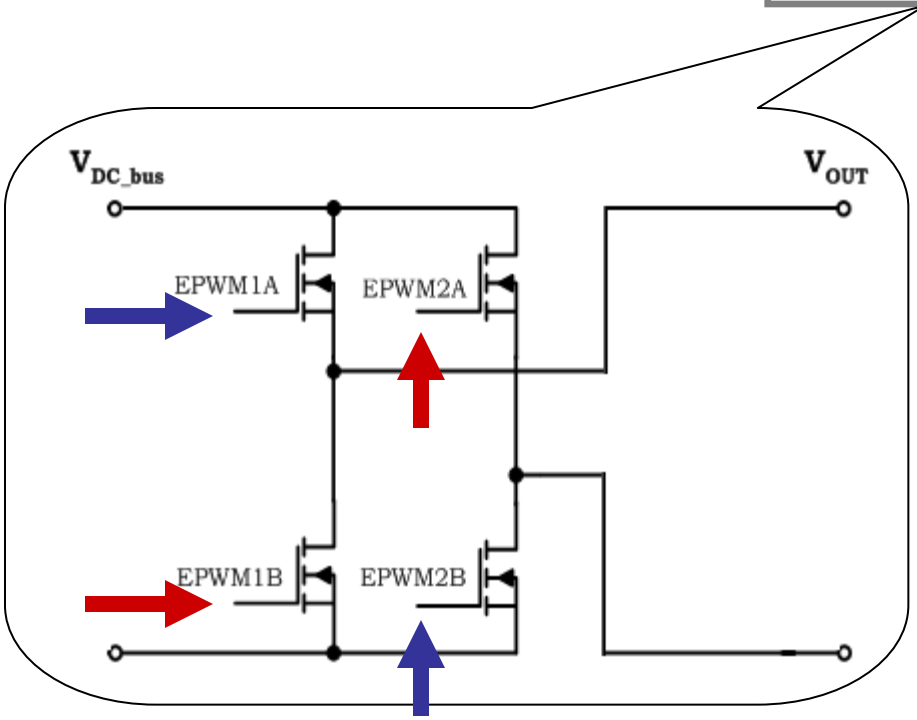

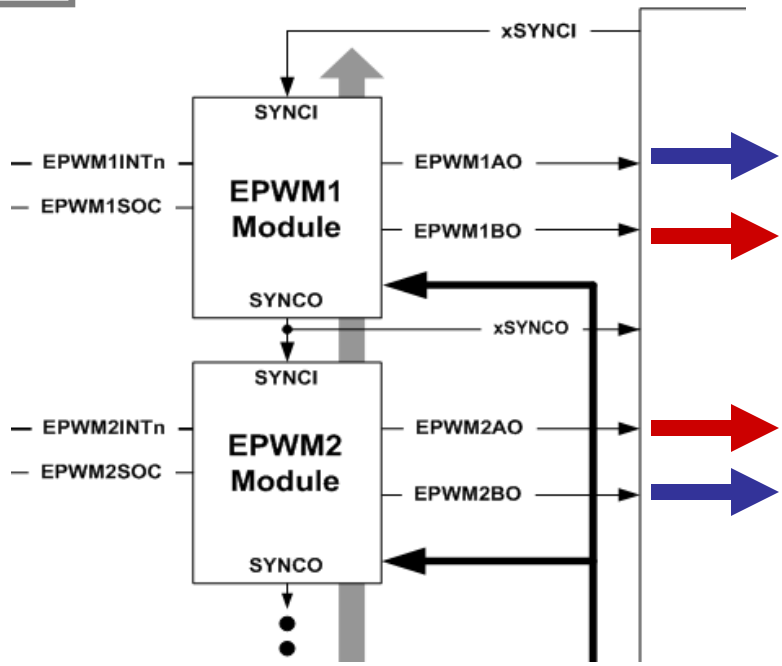

TMS320F280x(x) EPWM Modules

Introduction into Photovoltaic Systems – Solar Inverter: Without Transformer

Transformer-less Design: PFC Boost

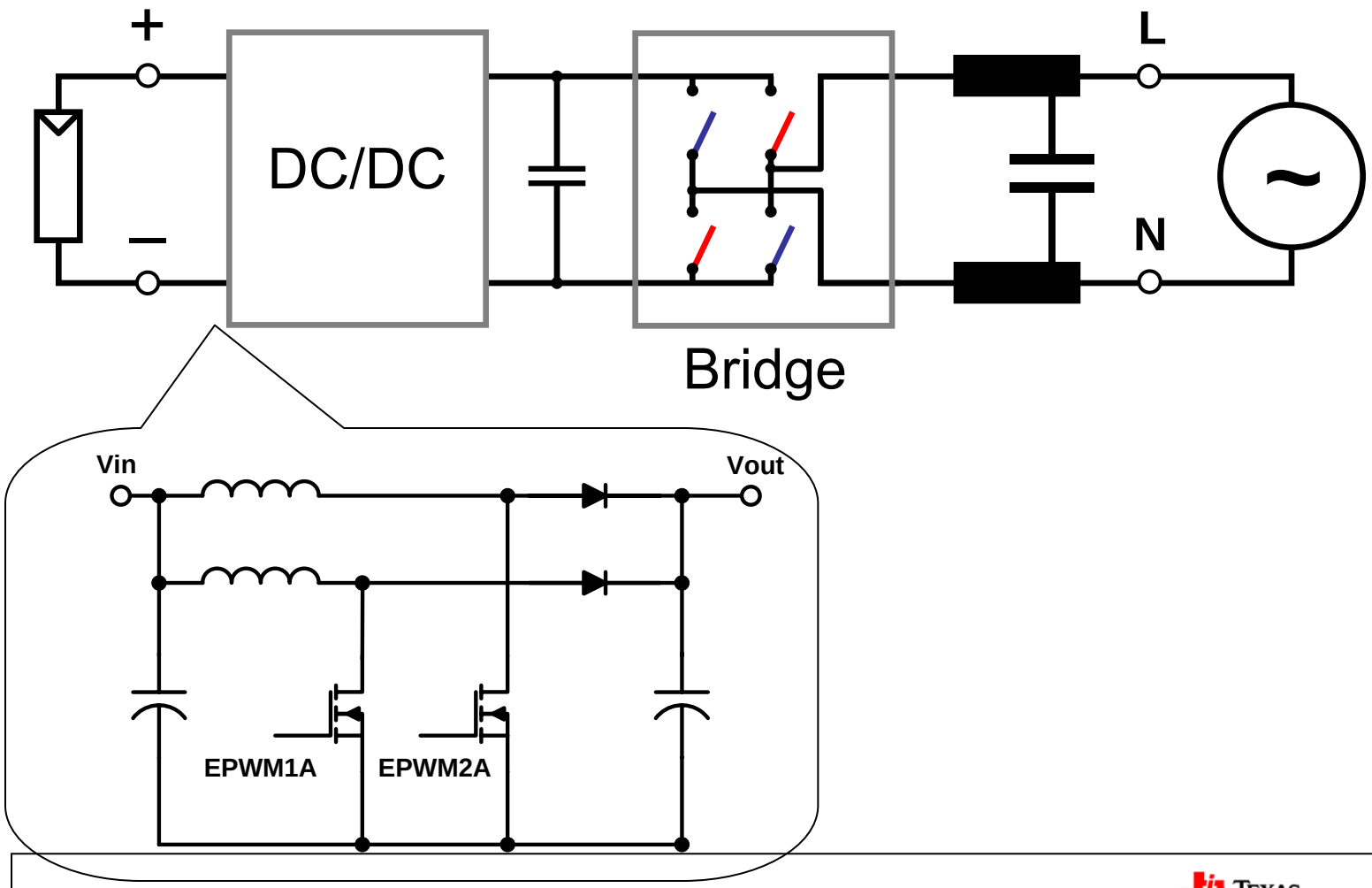

Solar Inverter: Transformer on AC side

Transformer Design: Transformer on AC side

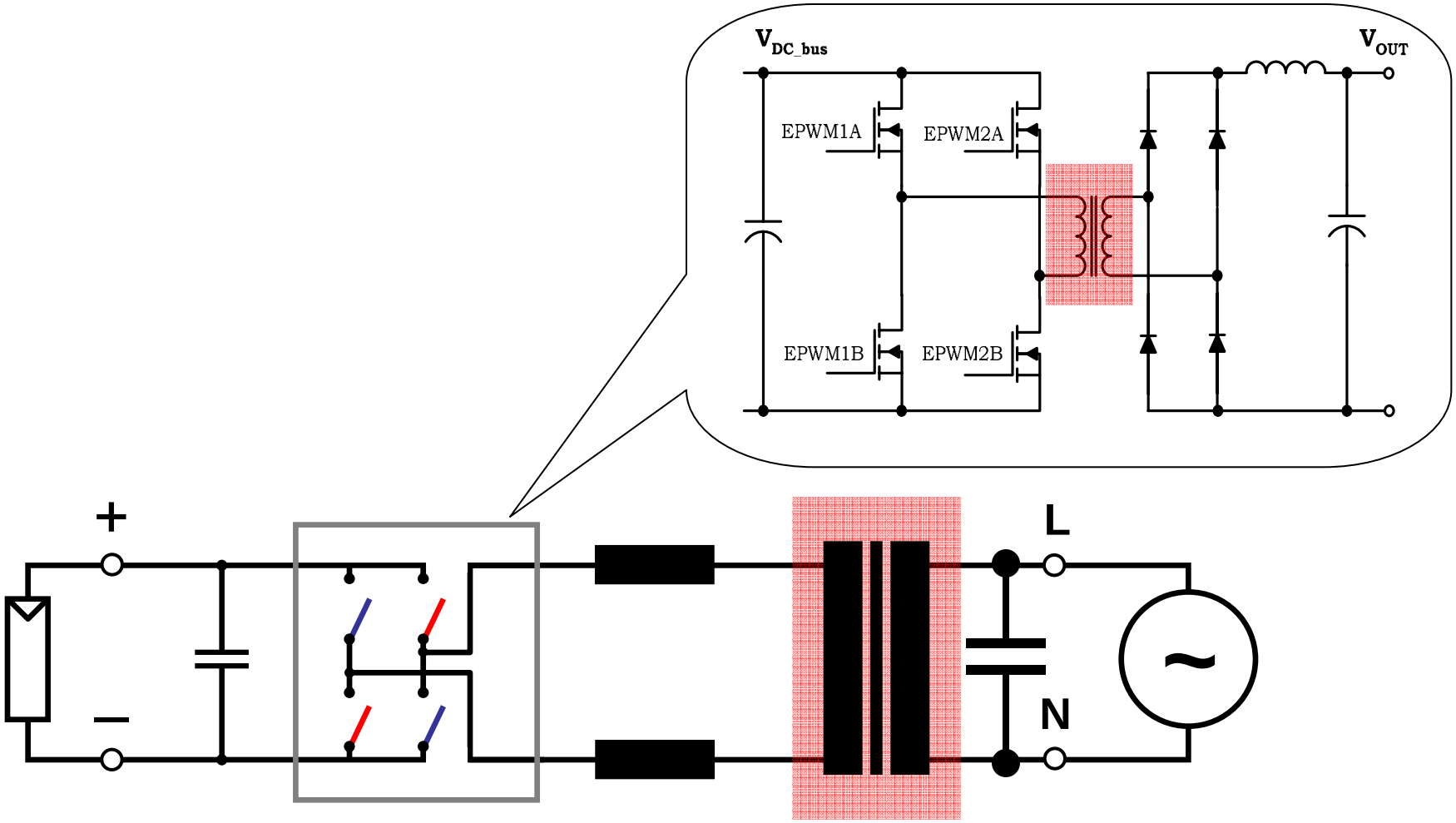

Transformer/less

Transformer Design: Transformer on DC side

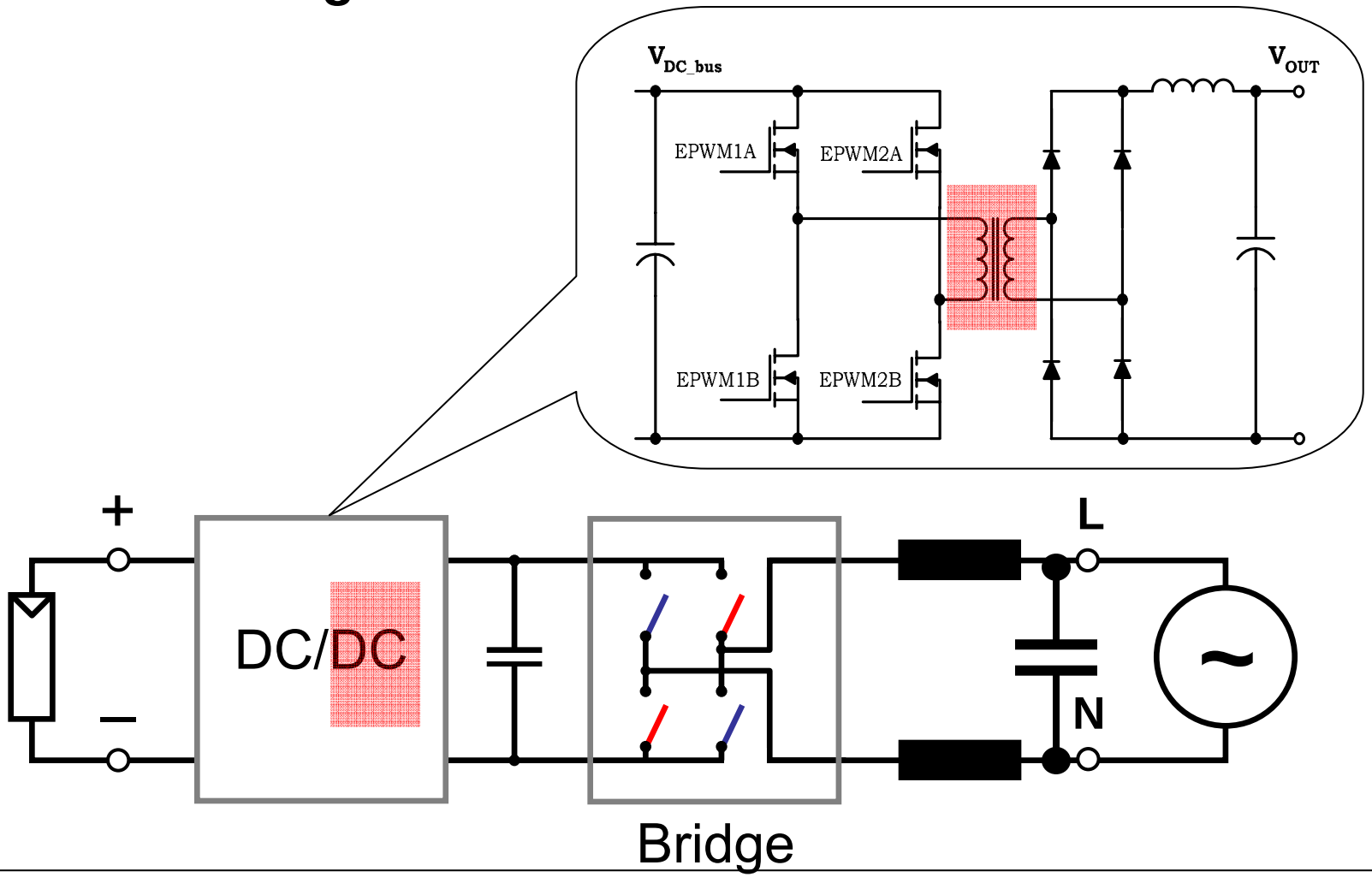

When to use which Topology?

- **Advantages of transformer-less inverters**
  - **Inverters which do not have galvanic isolation, i.e. no transformer, are generally *more efficient* since no losses are caused by a transformer (1 – 2%)**
  - **They are also *lighter*, *smaller* and *cheaper***

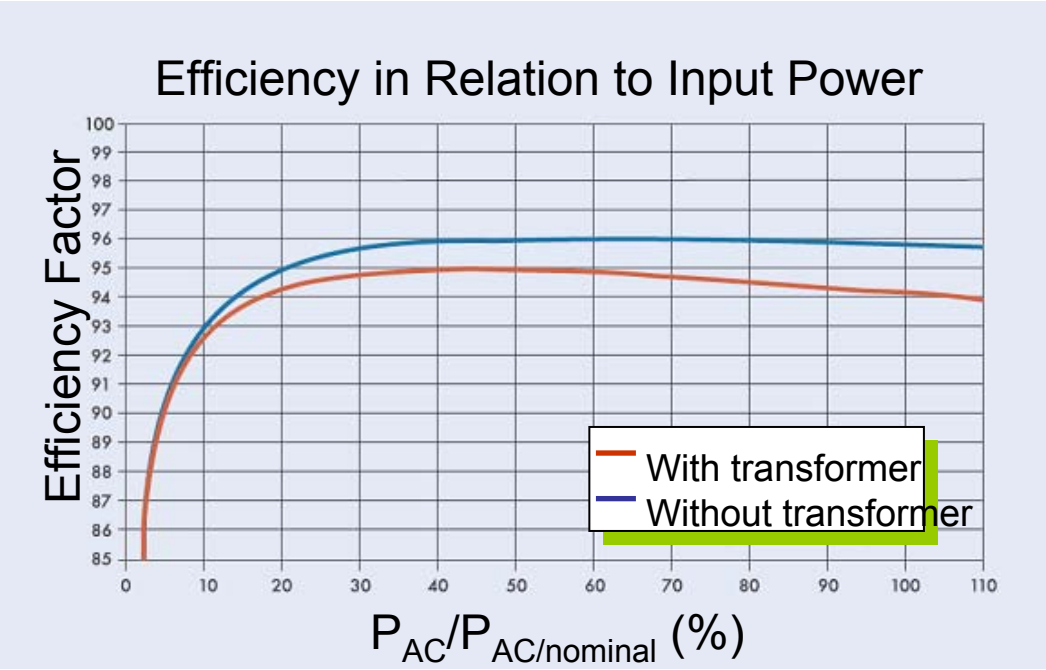

When to use which Topology?

- **Disadvantages of transformer-less inverters**
  - **Safety isolated solar panels need to be used, because no galvanic isolation between the power grid and the panels is given**

  Another problem is the capacitive leakage current:
    - **The common electrical potential of the power grid and the inverter as well as the high switching frequencies cause AC voltages on the panel side and therefore a capacitive current against ground**
    - **If the panels are touched, a residual current will flow. The amount of the current strongly depends on the type of inverter and solar panels used. Though it is not harmful in most cases, accidents can happen since people could be shocked when noticing the current/voltage (e.g. they could fall off the roof of their house while maintenance work)**
    - **An advanced residual current protective device (all-pole sensitive ground fault monitoring, according to VDE0126 in Germany) is required**

Maximum Power Point Tracking

- **The efficiency is optimized, when the panels are operating in the Maximum Power Point (MPP)**
- **The definition of the MPP is the point where the product of the panel current I_{Solar} and the panel voltage V_{Solar} (= the energy) is maximized**
- **Perturb & Observe & "Incremental Conductance"**

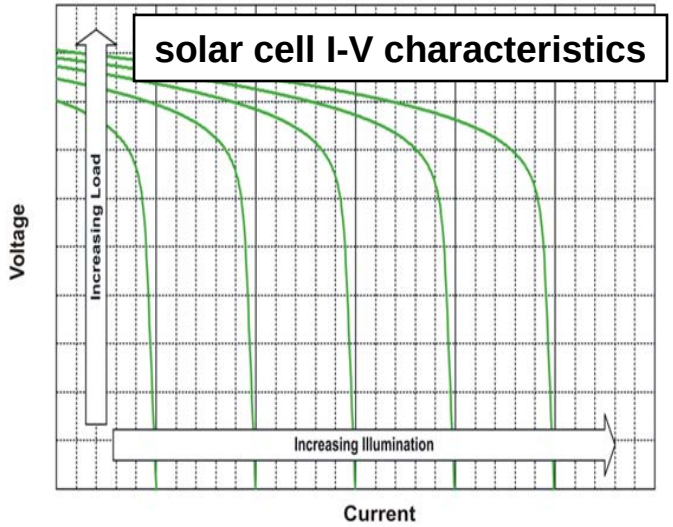

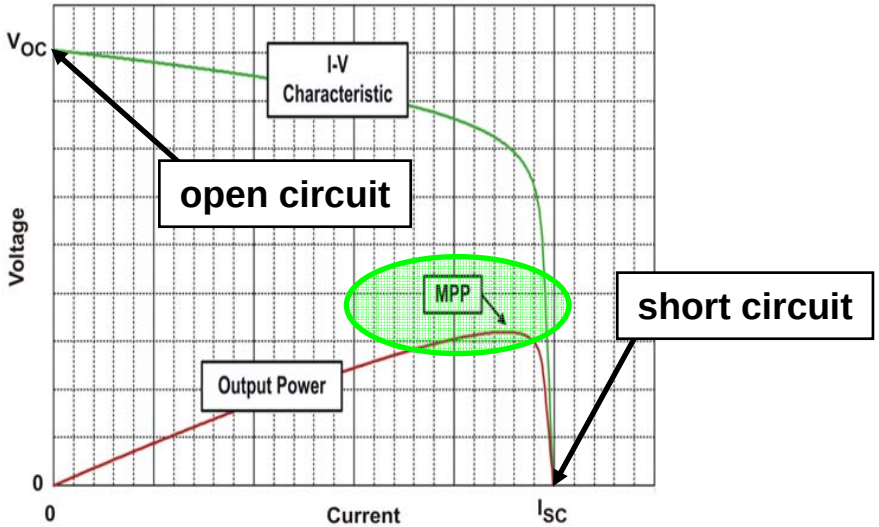

Automatic Power Grid Disconnection

In Germany and other EU countries an automated disconnection circuit is required to:

1. **Disconnect from the electricity network, if the impedance of the power grid changes more than 0.5 Ohm. This is the case during an outage.**
2. **Prevent DC voltage supply into power grid (I_{DC}<1A), else disconnection.**
   - **Mandatory for designs which do not use 50 Hz/60 Hz transformers.**
3. **Disconnection of the system is required in case the residual current excesses a certain value (for transformer-less designs).**
4. **Specification on the configuration of disconnection circuitry**

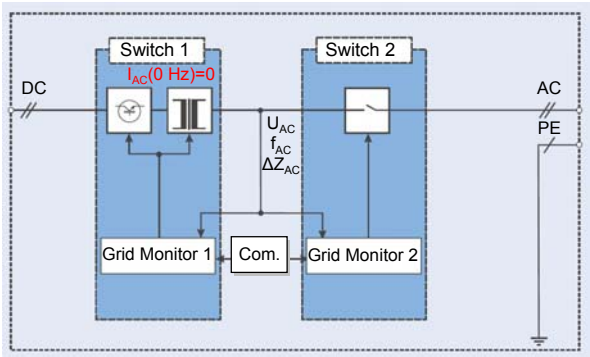

Inv. + Transformer

Transformer-less

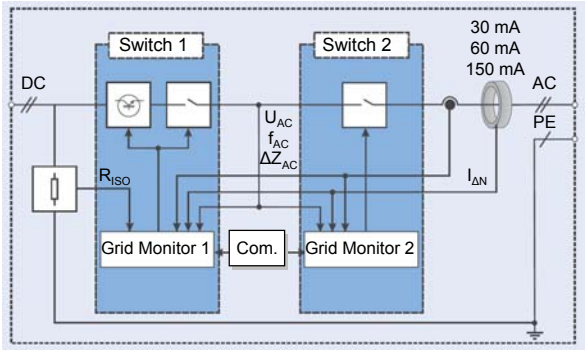

Solar Inverters – Main Function

- Solar inverters generate a sinusoidal AC waveform at a fixed level from a DC source with varying voltages.
- The output voltage needs to be at a certain level as well as the frequency (e.g. 230 V at 50 Hz for LV systems in Europe). If the inverter is connected to the power grid, voltage and frequency need to be synchronized with the power-line!
- Single, 2- and 3-phase types are available for different applications.
- Inverters for LV and MV supply exist.

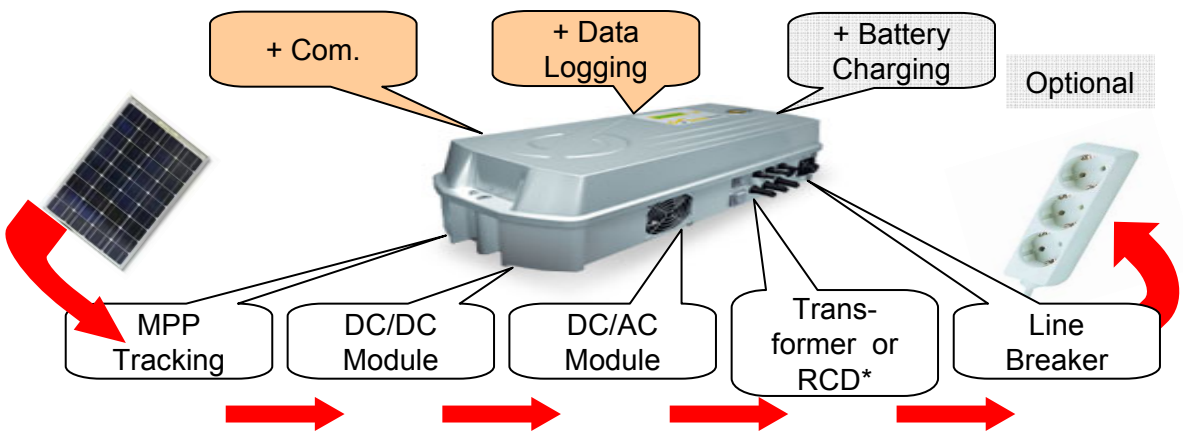

Segments of Solar Inverter

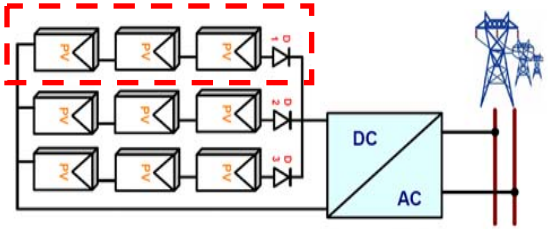

“Traditional” Central & String Inverters

- Only a single inverter is used for the solar plant.
  - Nominal power in the range of several MWp.
  - Special diodes are required to allow different string voltages. Diodes cause losses.
  - Not all solar panels can be driven in their MPP.

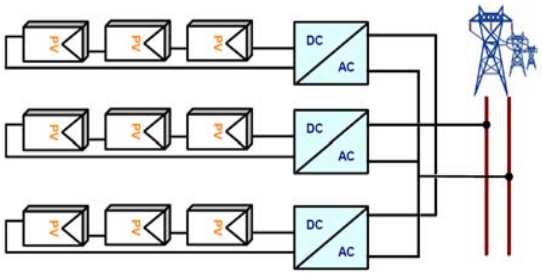

- **“Enhanced Comm” String Inverters**
- Multiple inverters are used in the plant, e.g. one per string.
  - Good efficiency because every string can be operated in its maximum power point and no string diodes are used.
  - Nominal power in the range of 1 – 10 kWp.

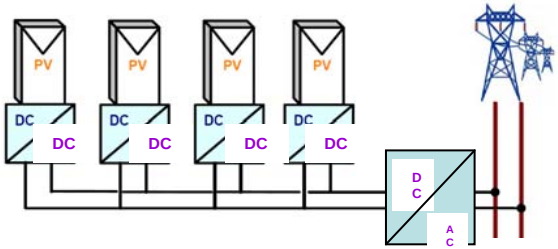

- **“Hybrid” Central/Micro Inverters**
- In each solar panel a separate DCDC boost and MPP tracker is integrated.
  - DC cabling to a central Inverter.
  - Central Inverter performs DC/AC and grid integrity/safety.
  - Nominal power of the inverters: 50 – 400 Wp.

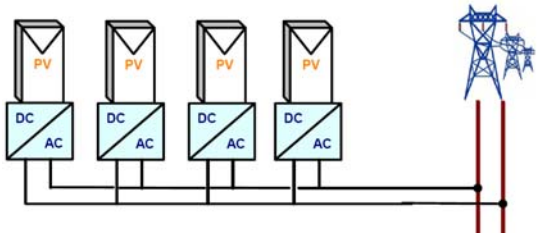

- **Micro Inverters**
- In each solar panel a separate inverter and MPP tracker is integrated.
  - No DC cabling, but extensive AC cabling necessary.
  - Traditionally considered only economical for small systems.
  - Nominal power of the inverters: 50 – 400 Wp.

Agenda

- **Introduction**
- **TI solutions in Solar**
- **TI MCU based EH Development Tools**
- **Existing Third Party Solutions**

Introduction into Photovoltaic Systems – Solar Inverter Application Block Diagram

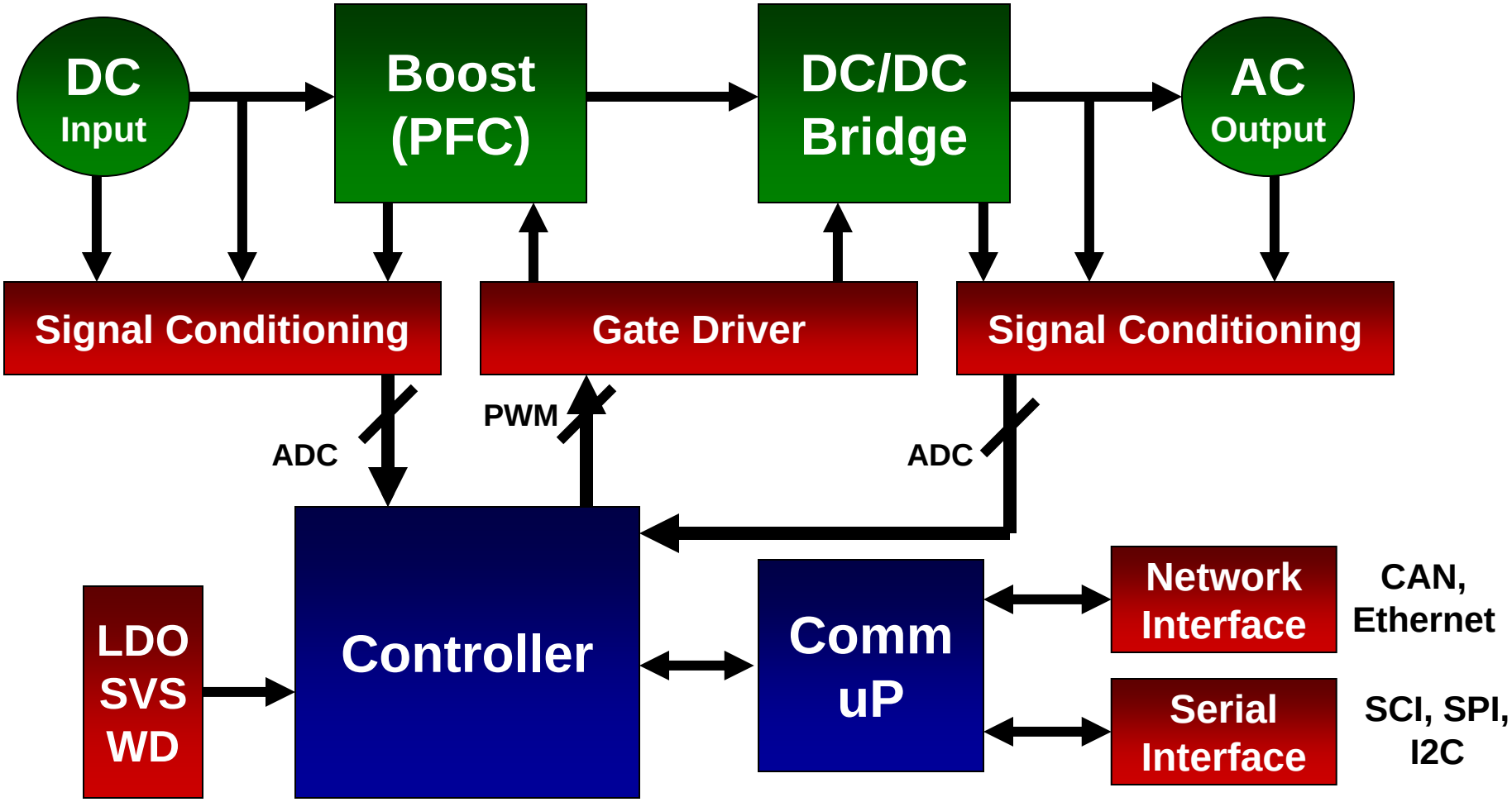

TI solution available

Texas Instruments

Introduction into Photovoltaic Systems – Solar Inverter Application Block Diagram

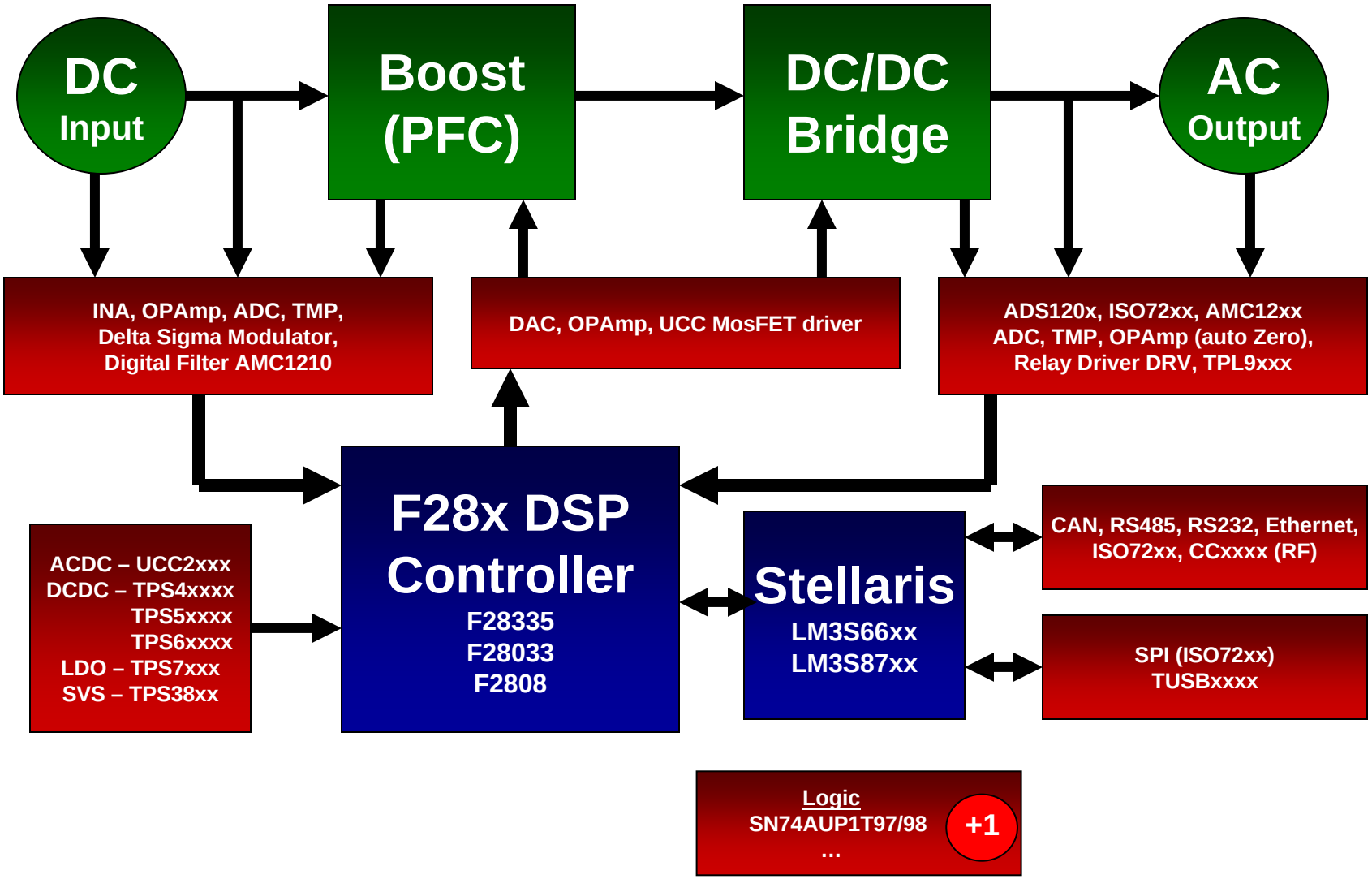

Watch out for Analog

Texas Instruments

Agenda

- **Introduction**
- **TI solutions in Solar**
- **TI MCU based Solar Development Tools**
- **Existing Third Party Solutions**

Renewable Energy Developer's Kit

TMDSENRGYKIT for $349

- **Renewable Energy Kit includes**
  - **F2808 controlCARD**
  - **~45 Watts DC/AC Inverter**
    - **15-20V DC input, 30V AC output, ~45 Watts**
    - **Front end single phase boost**
    - **Single phase inverter output implemented; board designed for single or three phase**
    - **Battery charging and management**
    - **Relay to switch between battery & solar panel.**
    - **AC line sensing and synchronization**
    - **All necessary voltage and current measurements for advanced development**
  - **Code Composer Studio v3.3 with code size limit of 32KB**
  - **C2000 Applications software with example code**
- **Complete Hardware Designer Package available – schematics, BOM, Gerbers**
- **Available through TI distributors and the TI eStore**
- **Standalone JTAG emulator required.**

Demo Platform

Control Card Based System

Relay

JTAG

Various Inputs

Inverter & Buck Load

SCI/GUI Interface

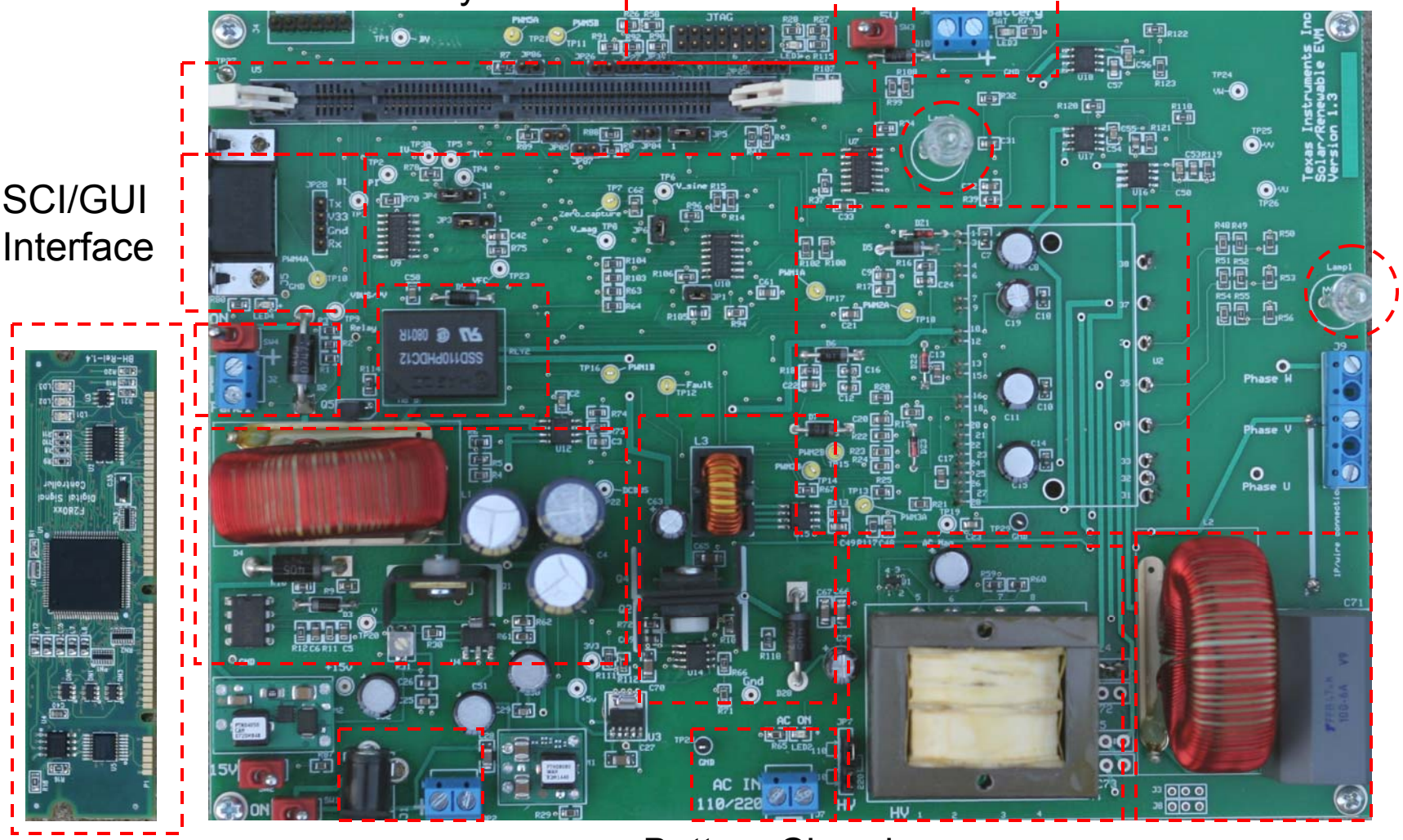

Front-end Boost

Battery Charging

Single/Three Phase Inverter

AC Line Sensing

Output Filter

Agenda

- **Introduction**
- **TI solutions in Solar**
- **TI MCU based Solar Development Tools**
- **Existing Third Party Solutions**

Solar/Inverter Third Parties

Enerconv

Fraunhofer Institut Solare Energiesysteme

mle Creative Electronics

drivetek ag development powerhouse

Why Wind?

- Utilities
- 20-20-20 goal
- Large scale wind (>0.5GW)
  - Complex electronics
  - Multiple PLC controllers
- Small scale wind (<0.5GW)
  - Analog pwr
  - Inverter

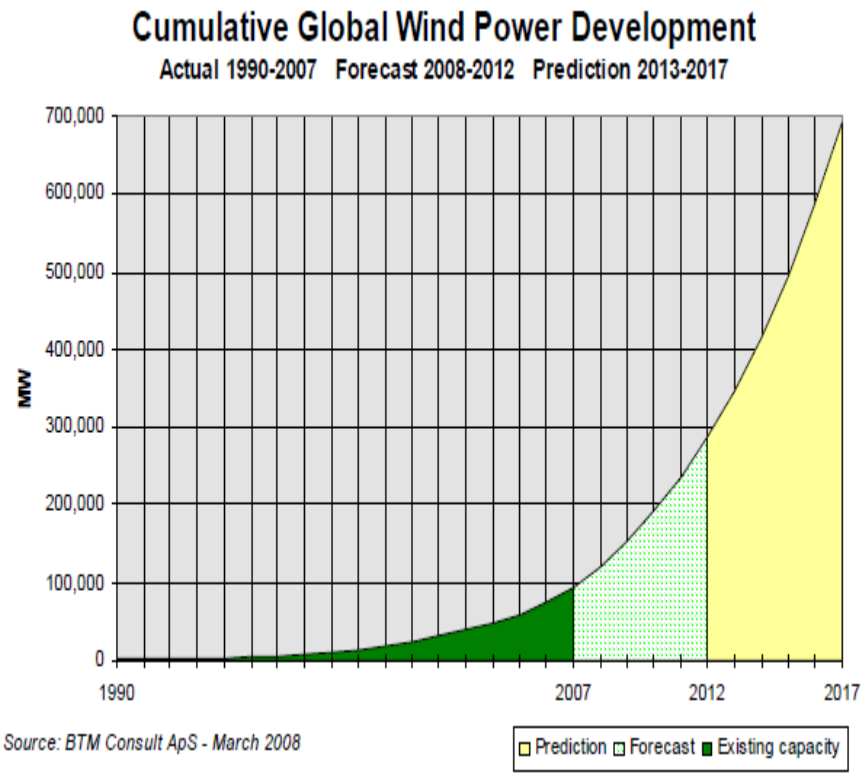

Introduction into Wind Energy – Wind Energy Topology

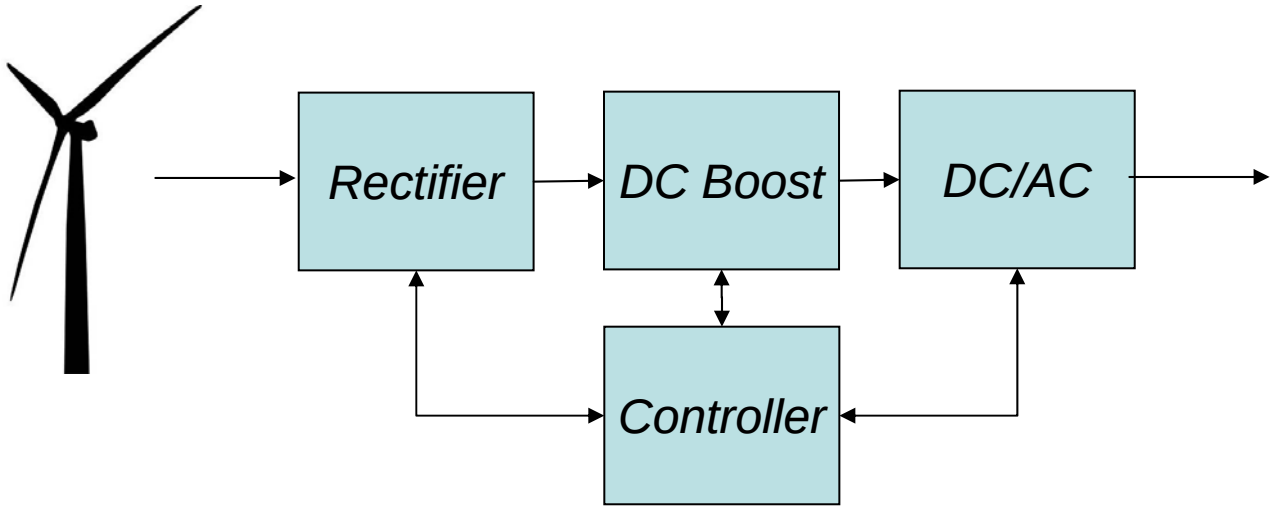

- **Energy is generated as AC but rectified immediately and send as DC to converter electronics**
- **Similar control electronics as the solar inverter for the rest of the system**

Large Scale Wind Turbines

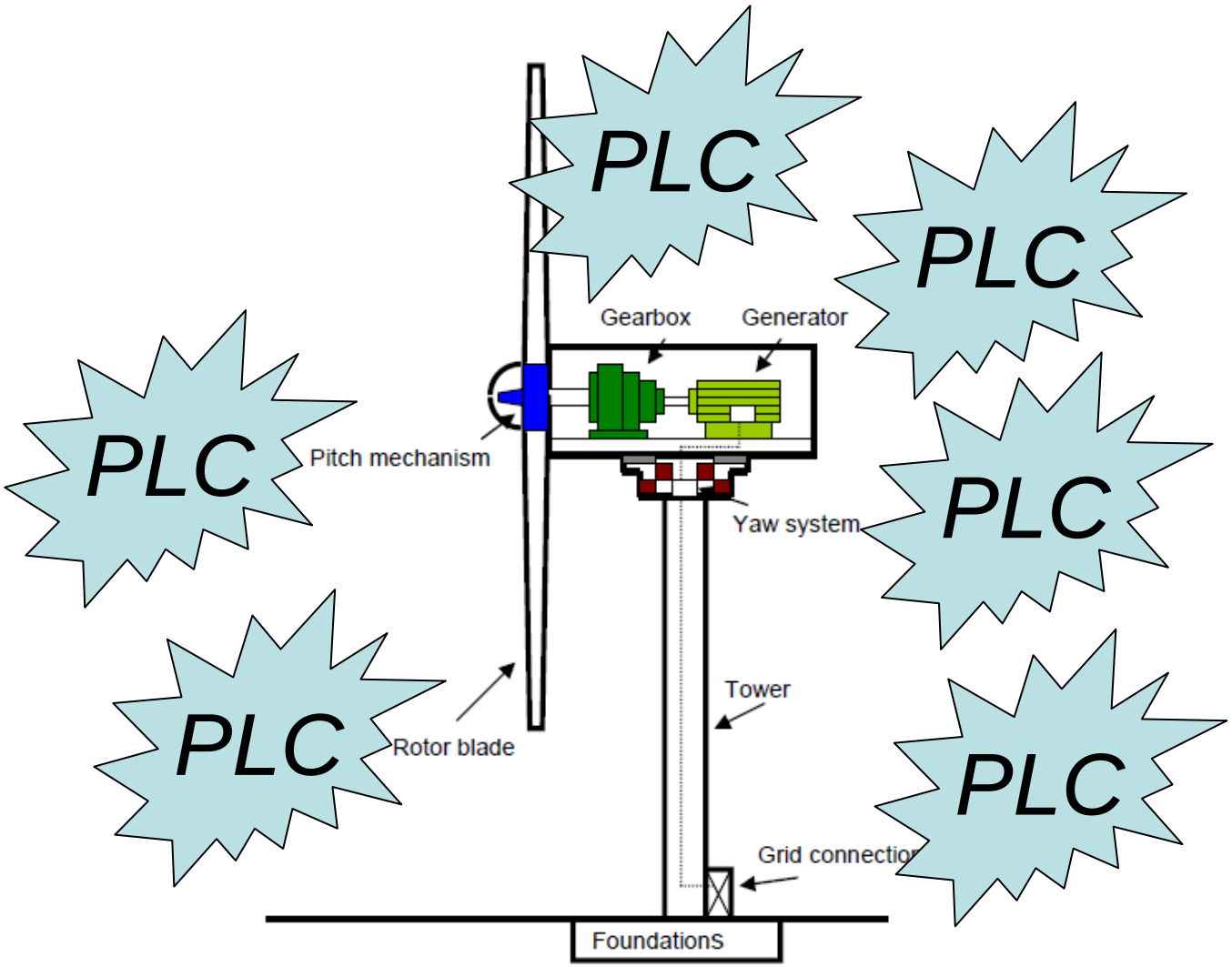

Renewable energy power system
TI example Parts

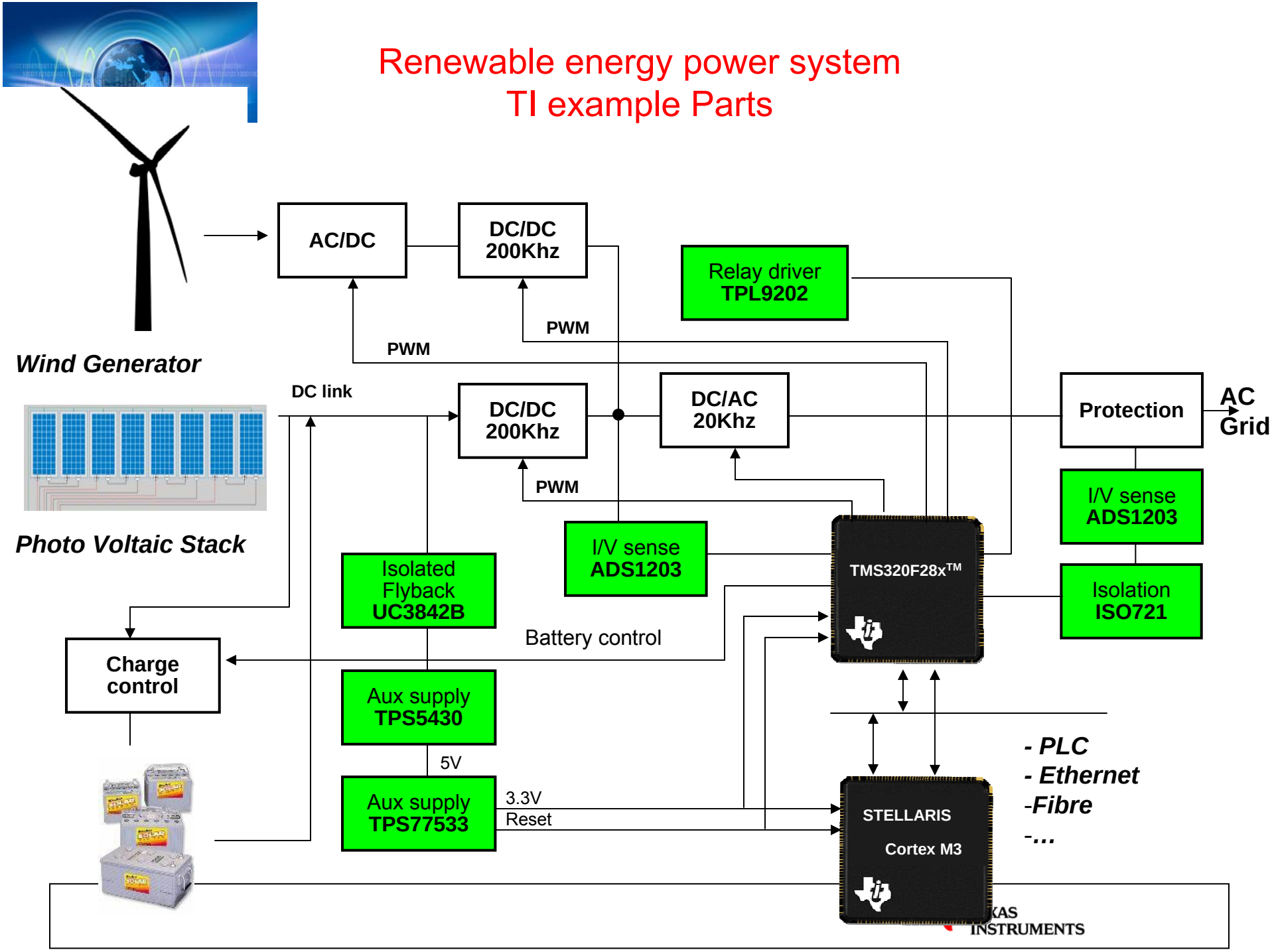

TI Solutions for Energy Harvesting

www.ti.com/energyharvesting

Why EH ?

- **Energy consumption reduction**
- **Battery life extension**
- **Maintainance free**
- **EH is increasingly being looked at:**
  - **Industrial**
  - **Building Automation**

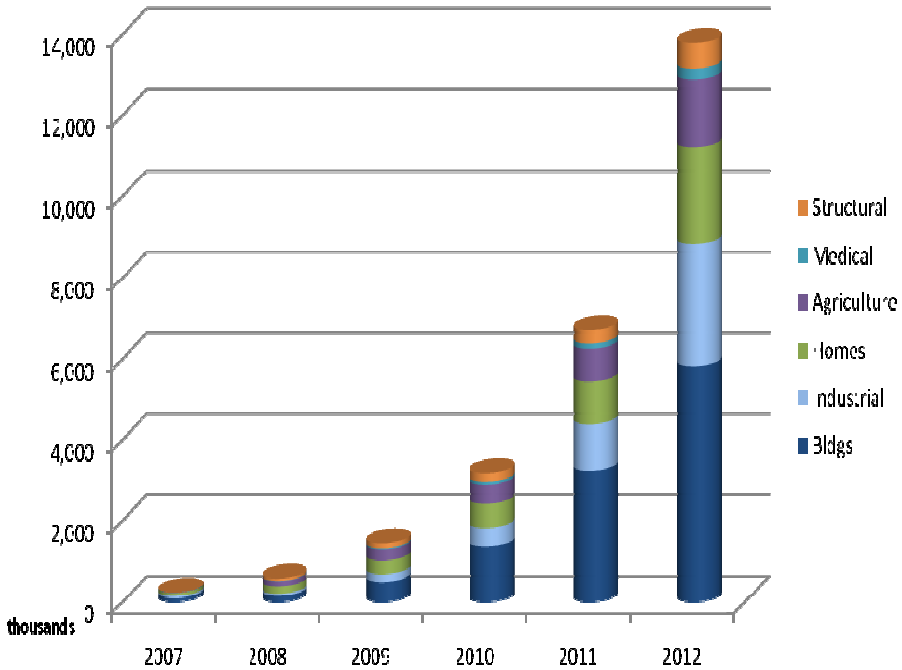

Source: ON World 2008

enocean® alliance
No Wires. No Batteries. No Limits.

ZigBee® Alliance

Agenda

- **Energy Harvesting**
  - **Introduction to EH**
  - **TI solutions in EH**
  - **EH Development Tools**
  - **Existing EH Third Party Solutions**

Introduction

- *Energy harvesting* **is the process by which energy is** *captured* **and** *stored*
- **"conversion of** *ambient energy* **into usable electrical energy", also known as energy scavenging and power harvesting**
- **Battery replacement is** *impractical, costly*, **or** *dangerous* **such as implants, remote locations, etc.**

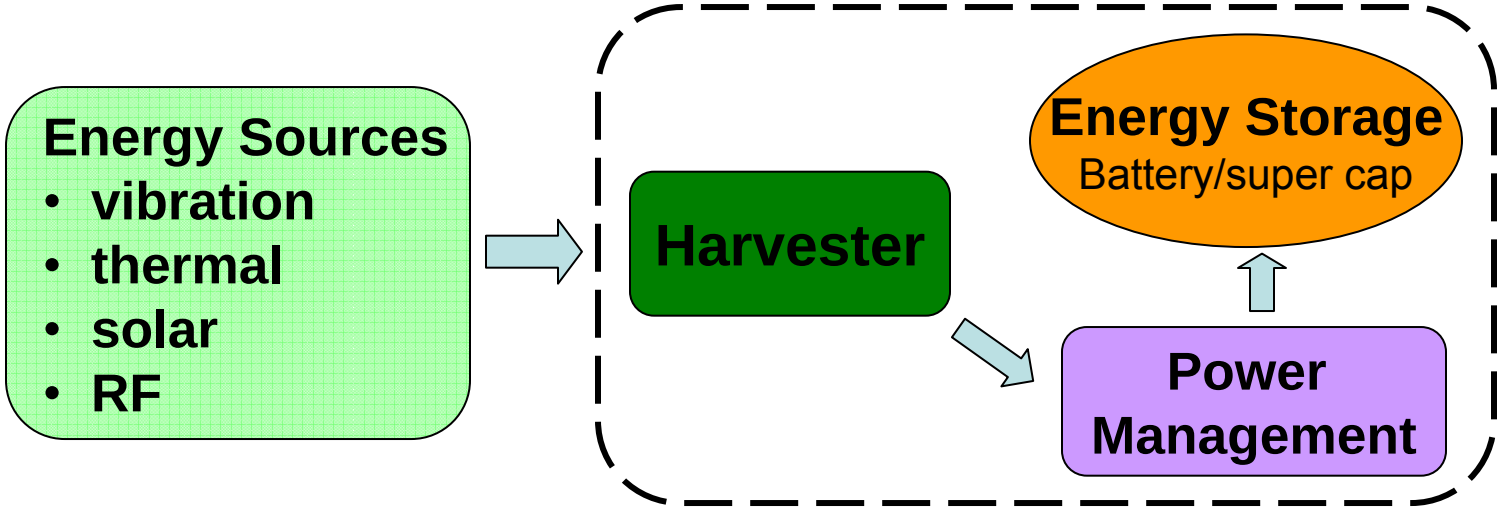

Energy Harvest Module

When Does Harvesting Make Sense?

- **Harvestable energy available**
- **Difficult to install or power devices**
- **Difficult to reach devices for maintenance**
- **Cords/wiring too costly**
- **Numerous devices – high maintenance in the case of battery driven**
- **Environmentally friendliness required**
- **High uptime demanded – battery failure problematic or expensive**

One or more of these characteristics are required for energy harvesting to make sense compared to batteries

Applications Examples

- Consumer
  - Several
- Industrial
  - Machinery Health Monitoring
  - Structural Health Monitoring
  - Wireless sensing
- Building automation
  - Lighting Controls
  - HVAC Controls and Monitoring
  - Security

- Automotive
  - Asset tracking
  - Wireless sensing
  - Wireless switching
  - TPMS

- Medical
  - Patient monitoring
  - Patient Id and tracking
  - Smart patches

- Agriculture
  - Soil conditions, Plant pH, Wind

Low data rate, low duty cycle, low power

Characteristics of EH applications

- Ability to operate with lowest standby current to maximize storage of energy.
- Consume lowest possible power when active.
- Ability to turn on and turn off instantaneously.
- Efficient operation with lowest duty cycle of active vs. standby modes.
- Analog capability for sensor interfacing and measurements.
- Ability to operate with a low voltage range.
- Lowest leakage currents to maximize harvested energy

Energy Harvest Power Sources

Vibration energy

Piezoelectric

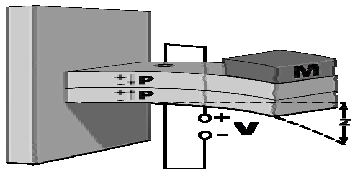

- Piezoelectric material (AlN,or PZT) converts mechanical strain into electrical energy.

Electrostatic

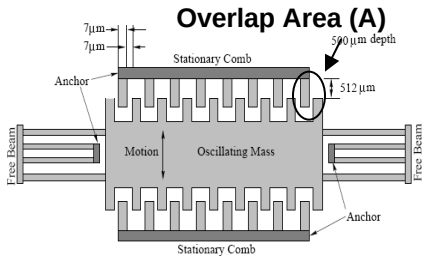

- Vibration -> motion of oscillating mass
- Vary A, d or ε_0

$$C = \frac{\varepsilon_0 A}{d} \qquad Q = CV$$

Electromagnetic

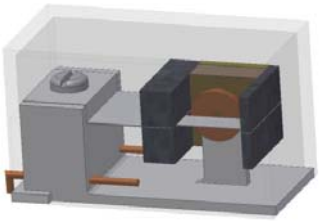

- Vibration -> motion of magnetic field;
- Current flows in the static copper coil;

Thermal energy

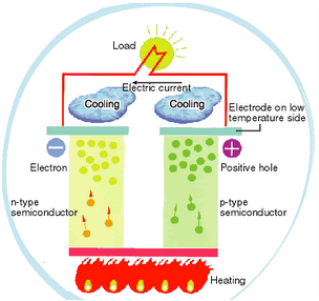

Thermocouple

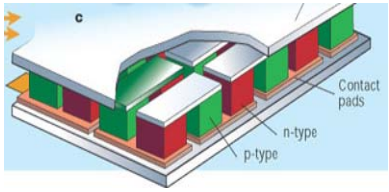

Nature 413, Oct. 2001

Thermopiles

- thermally in parallel
- electrically in serial

Seebeck Effect

ΔT drives heat flow

⇩

Electrons and holes flow in N-type and P-type semiconductor materials

⇩

Electrical energy

$V = \alpha(-\Delta T)$

Energy Harvest Power Sources

Solar energy

Photovoltaic cells

~ 100mW/cm^2 in bright sun
~ <u>100 uW/cm^2</u> in illuminated office
Energy conversion efficiency 10% ~20%
Active developing area to improve efficiency

Energy Source	Characteristics	Efficiency	Harvested Power
Light	Outdoor Indoor	10~24%	100 mW/cm^2 100 μW/cm^2
Thermal	Human Industrial	~0.1% ~3%	60 μW/cm^2 ~1-10 mW/cm^2
Vibration	~Hz–human ~kHz–machines	25~50%	~4 μW/cm^3 ~800 μW/cm^3
RF	GSM 900 MHz WiFi	~50%	0.1 μW/cm^2 0.001 μW/cm^2

Agenda

- **Energy Harvesting**
  - **Introduction to EH**
  - **TI solutions in EH**
  - **EH Development Tools**
  - **Existing EH Third Party Solutions**

Energy Harvesting Block Diagram

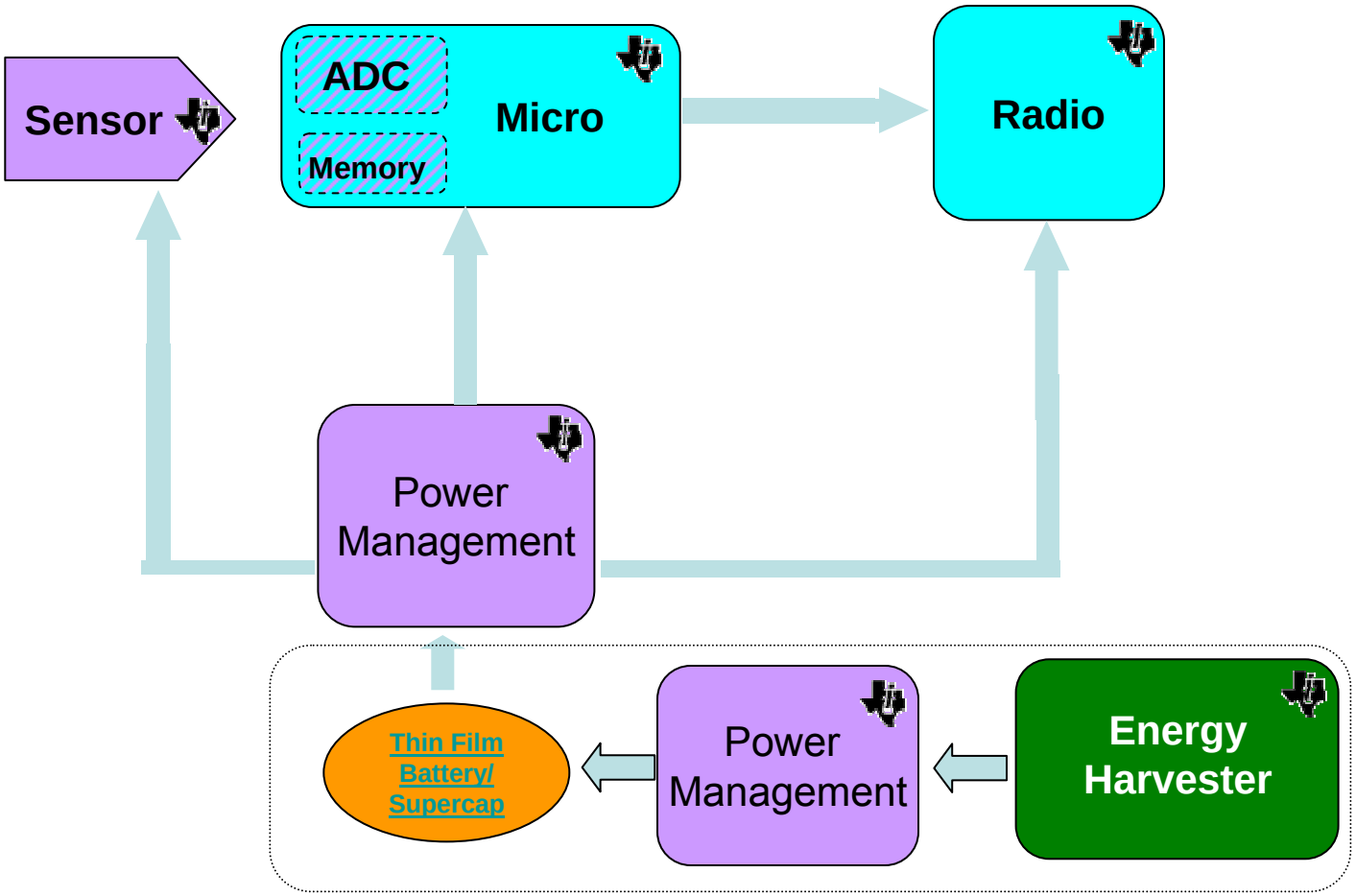

Energy Harvesting Block Diagram

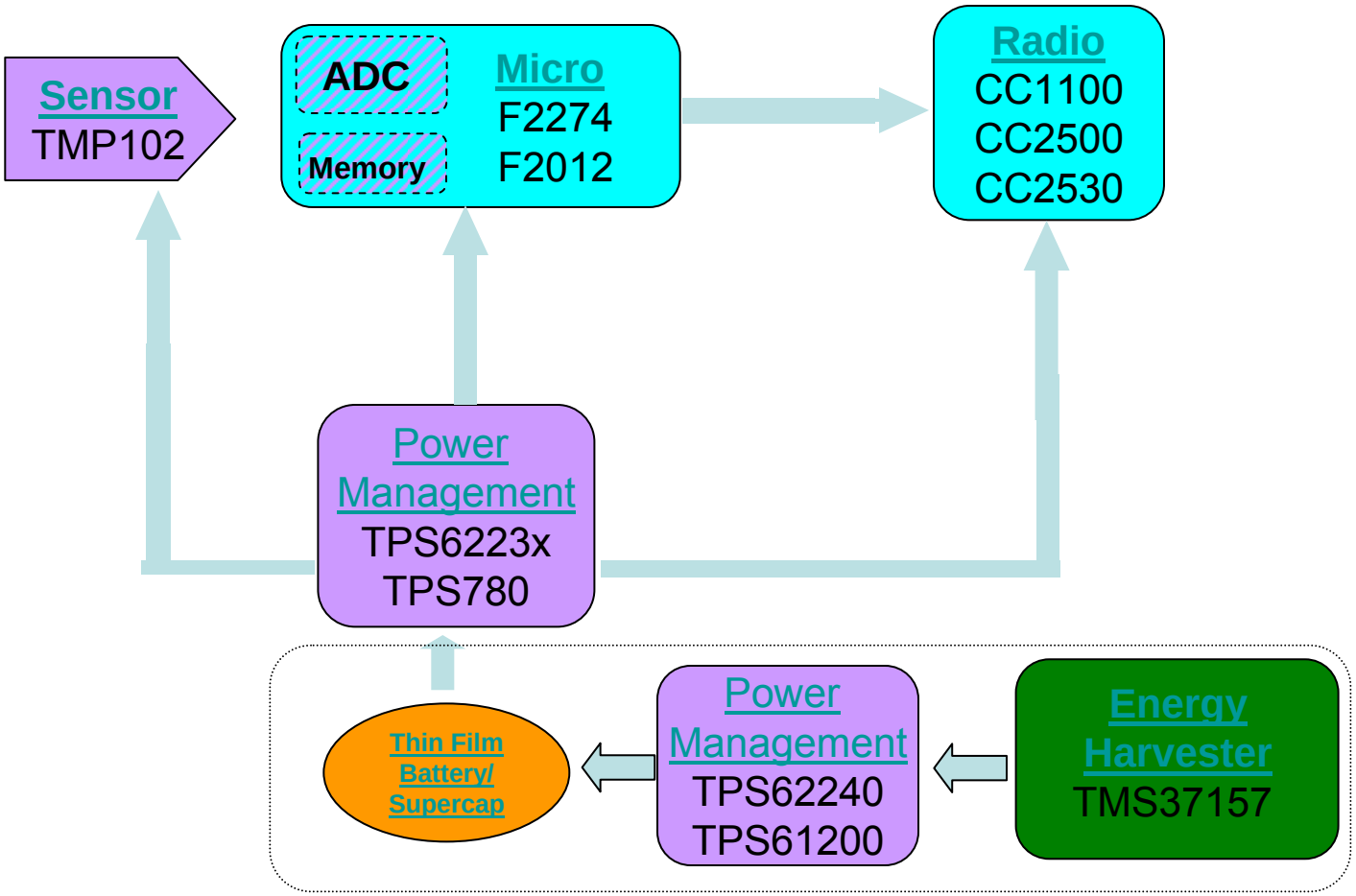

Power concept proposal (Li-thin film battery)

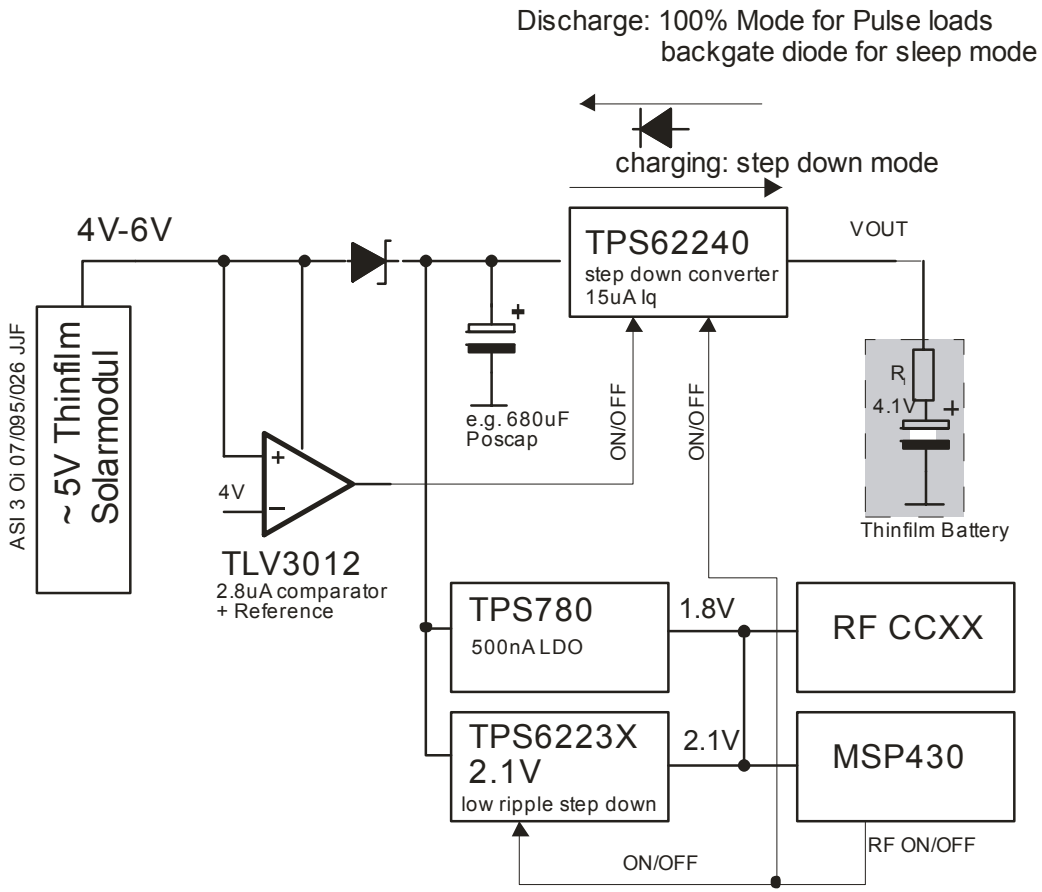

Agenda

- **Energy Harvesting**
  - **Introduction to EH**
  - **TI solutions in EH**
  - **EH Development Tools**
  - **Existing EH Third Party Solutions**

ez430-RF2500-SEH EVK

- **Solar Energy Harvesting module for eZ430-RF2500**
  - **Ultra Low Power: MSP430F2274 + CC2500**
  - **2.4 GHz ISM wireless**
  - **Includes SimpliciTI Network Stack**
- **Works in low ambient light**
- **Negligible self-discharge**
- **400+ transmission with no light**
- **Adaptable to any sensor and RF network**

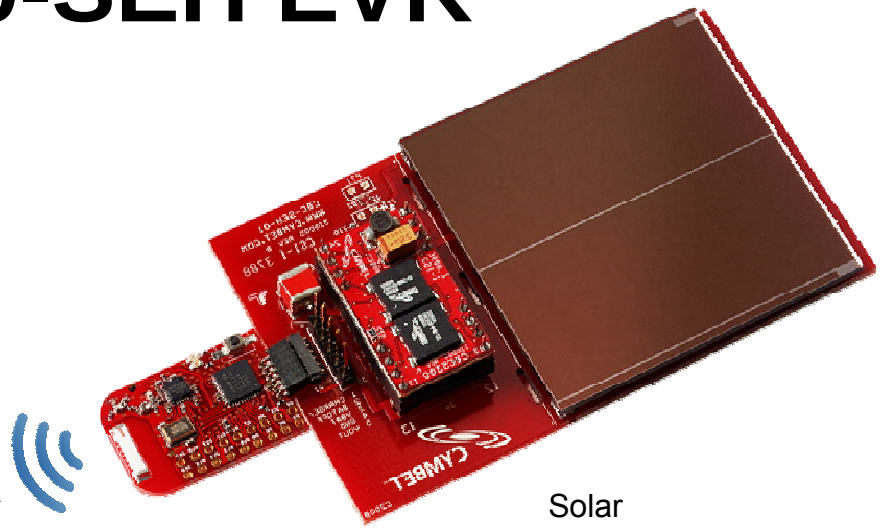

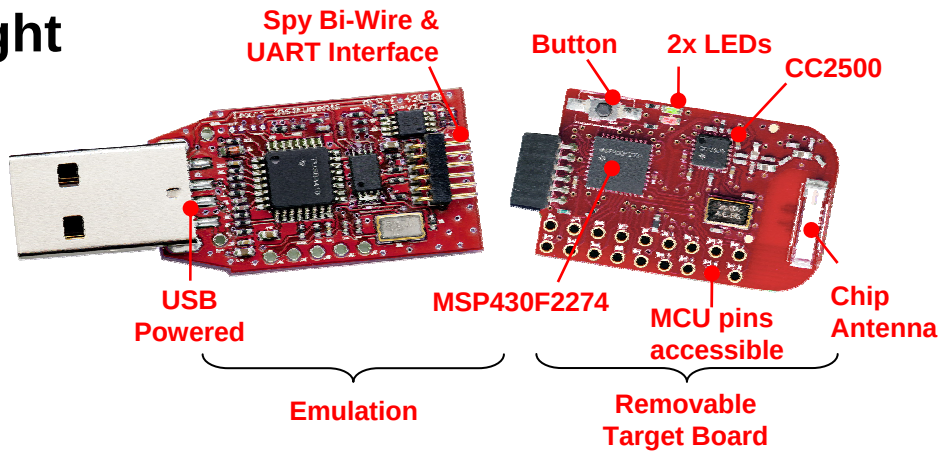

TMS37157

PaLFI – Passive Low Frequency Interface Device

eZ430 - PaLFI

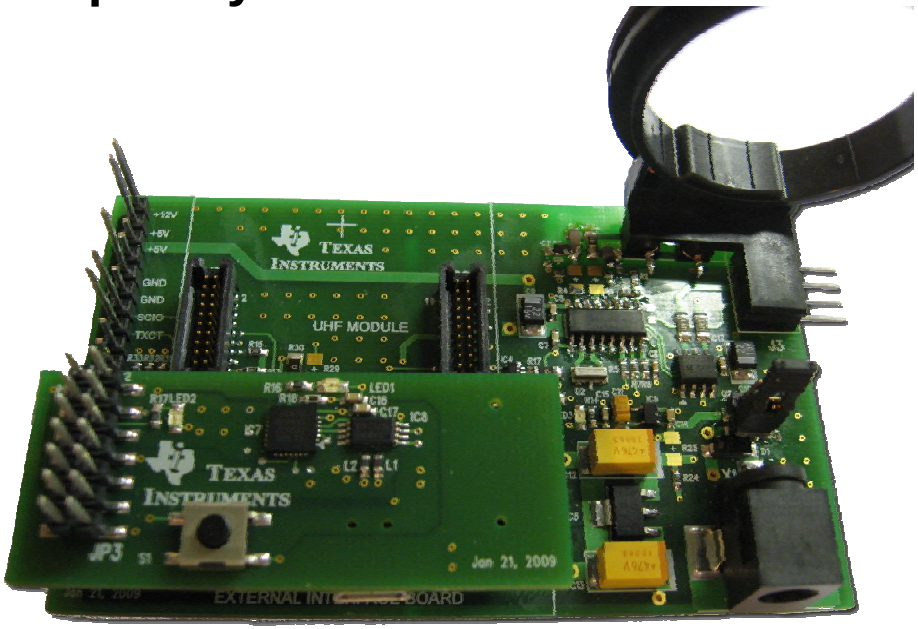

Development Kit:

- **Compatible to the eZ430-RF2500**
- **Includes:**
- **eZ430 Emulator Stick**
- **eZ430 Battery Board**
- **eZ430-PaLFI Target Board**
- **USB RFID Reader with Antenna**
- **USB cable**

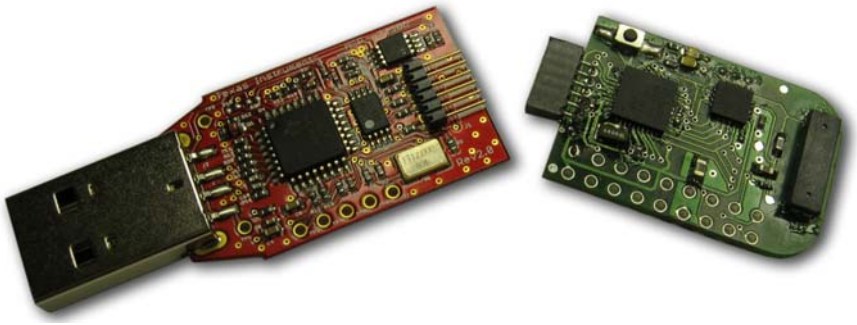

Texas Instruments

RF Protocol Software

- Z-Stack - ZigBee Protocol Stack from TI
  - One of the first ZigBee stacks with the ZigBee 2006 certification
  - Supports multiple platforms such as CC2480, CC2431 and CC2520+MSP430 platform
  - ZigBee 2007/PRO available on MSP430+CC2520 (Golden Unit 2007) and CC2530 platforms
- TIMAC
  - A standardized wireless protocol for battery-powered and/or mains powered nodes
  - Suitable for applications with low data-rate requirements
  - Support for IEEE 802.15.4-2003/2006
- SimpliciTI Network Protocol – RF Made Easy
  - A simple low-power RF network protocol aimed at small RF networks
  - Typical for networks with battery operated devices that require long battery life, low data rate and low duty cycle

All software solutions can be downloaded free from TI web

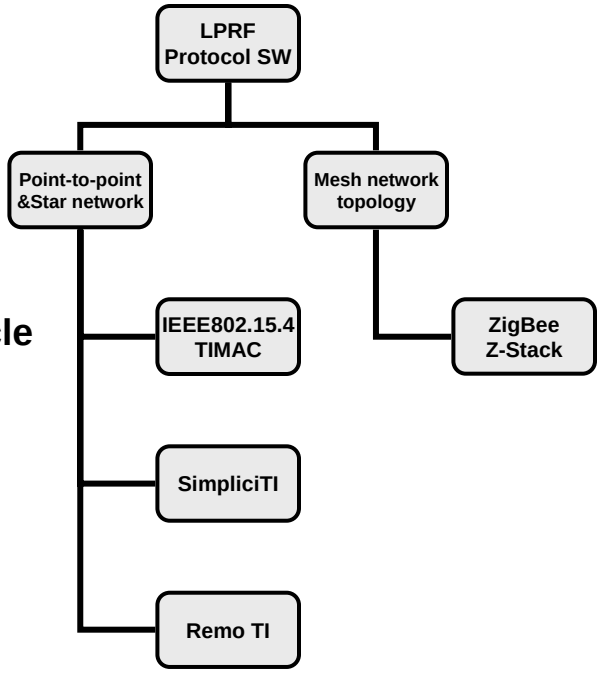

Agenda

- **Energy Harvesting**
  - **Introduction to EH**
  - **TI solutions in EH**
  - **EH Development Tools**
  - **Existing EH Third Party Solutions**

Harvester 3rd party solutions

AdaptivEnergy

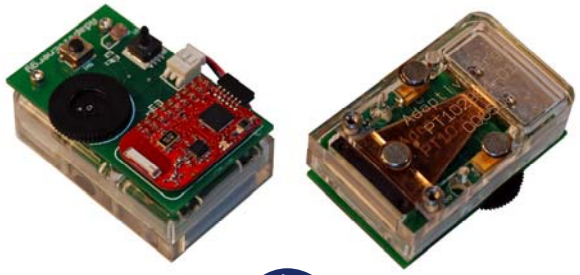

micropelt

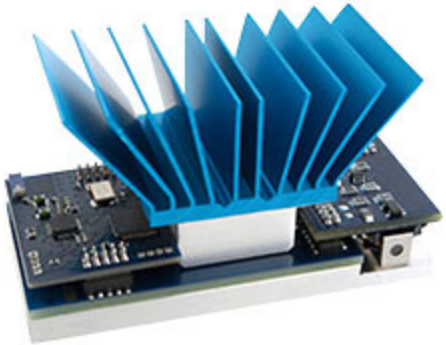

enocean® alliance
No Wires. No Batteries. No Limits.

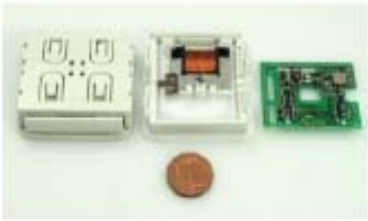

Light switch transmitter

perpetuum

Energy Storage Options

	Li-Ion	Thin Film Rechargeable	Super Cap
Recharge Cycles	**100s**	**5k-10k**	**Millions**
Self Discharge	**Moderate**	**Negligible**	**High**
Charge Time	**Hours**	**Minutes**	**Sec-Minutes**
SMT & Reflow	**Poor-None**	**Good**	**Poor**
Physical Size	**Large**	**Small**	**Medium**
Capacity	**0.3-2500mAHr**	**12-700uAHr**	**10-100uAHr**
Environmental Impact	**High**	**Minimal**	**Minimal**

Summary

- **TI has development tools for Renewable Energy and Energy Harvesting development**
- **Broad Analog and Digital portfolio to support systems development**
- **Experienced 3rd party network**

- **Call to Action – look for Renewable Energy customers in your region (Solar, Wind, Fuel cell, Wave, Tidal, Energy Harvesting)**

THANK YOU !

www.ti.com/energyharvesting