New MSP430 – Next Generation of the low power µC-Families

2010 TI Tech Day

Texas Instruments

Agenda

- Overview of TI‘s µC portfolio
- MSP430 Roadmap & Generations
- Main features of the MSP430
- MSP430 in Industrial Applications
- MSP430 with USB on Chip
- MSP430 & E-Meter Applications
- 1st MSP430 with integrated SRD RF-Transceiver
- MSP430 Tools / Update
- MSP430 and FRAM

Agenda

- Overview of TI‘s µC portfolio
- MSP430 Roadmap & Generations
- Main features of the MSP430
- MSP430 in Industrial Applications
- MSP430 with USB on Chip
- MSP430 & E-Meter Applications
- 1st MSP430 with integrated SRD RF-Transceiver
- MSP430 Tools / Update
- MSP430 and FRAM

How TI MCUs fit into the “big picture” at TI

Microcontrollers			ARM-Based		DSP
16-bit MCU	**32-bit Real-time MCU**	**32-bit ARM MCU**	**ARM+**	**ARM + DSP**	**DSP**
MSP430	**C2000™**	**Stellaris Cortex M3**	**ARM9 Cortex A-8**	**C64x+ plus ARM9/Cortex A-8**	**C647x, C64x+, C55x**
Ultra-Low Power	Fixed & Floating Point	Industry Std Low Power	Industry-Std Core, High-Perf GPP	Industry-Std Core + DSP for Signal Proc.	Leadership DSP Performance
Up to 25 MHz	Up to 300 MHz	Up to 100 MHz	Accelerators	4800 MMACs/ 1.07 DMIPS/MHz	24,000 MMACS
Flash 1 KB to 256 KB	Flash 32 KB to 512 KB	Flash 8 KB to 256KB	MMU	MMU, Cache	Up to 3 MB L2 Cache
Analog I/O, ADC LCD, USB, RF	PWM, ADC, CAN, SPI, I^2C	USB, ENET, ADC, PWM, CAN	USB, LCD, MMC, EMAC	VPSS, USB, EMAC, MMC	1G EMAC, SRIO, DDR2, PCI-66
Measurement, Sensing, General Purpose	Motor Control, Digital Power, Lighting, Sensing	Host Control, communications, motor control	Linux/WinCE User Apps	Linux/Win + Video, Imaging, Multimedia	Comm, WiMAX, Industrial/ Medical Imaging
$0.49 to $9.00	$1.50 to $20.00	$1.00 to $7.00	$8.00 to $35.00	$12.00 to $65.00	$4.00 to $99.00+

TI MCUs in Industrial Automation

HMI

PLC

OMAP™ OMAP353x — Texas Instruments

OMAP™ OMAP L1 — Texas Instruments

- Scalable ARM performance up to 600 MHz Cortex A8
- Scalable Display Resolution: VGA, SVGA, XGA, 720p
- Industrial Interfaces RS485, CAN, ETH
- High Level Operating Systems: Linux, WinCE, QNX, VxWorks, etc.
- Low Power Consumption < 500mW (active)

Motor Control/ Drives

Stellaris — Texas Instruments

C2000 — Texas Instruments

- Enhanced Portfolio with Piccolo™ and Delfino™
- Highest performance with Floating-point and CLA
- Complete motor control library

Actuator/ Sensor

Stellaris — Texas Instruments

MSP430 — Texas Instruments

- Ultra-Low-Power with 165µA/MIPS, 2.5 µA stand-by
- Strong peripheral set: USB, LCD, 16-bit timers
- Analog Integration (ADC, DAC, Opamp)
- Integrated and discrete LPRF portfolio

Interfacing/ Connectivity

C2000 — Texas Instruments

MSP430 — Texas Instruments

Stellaris — Texas Instruments

- Vast Connectivity Offering
- Ethernet, CAN, USB and combinations
- Ethernet MAC + PHY
- USB Host and Device, including APIs

Agenda

- Overview of TI‘s µC portfolio
- MSP430 Roadmap & Generations
- Main features of the MSP430
- MSP430 in Industrial Applications
- MSP430 with USB on Chip
- MSP430 & E-Meter Applications
- 1st MSP430 with integrated SRD RF-Transceiver
- MSP430 Tools / Update
- MSP430 and FRAM

MSP430 Roadmap

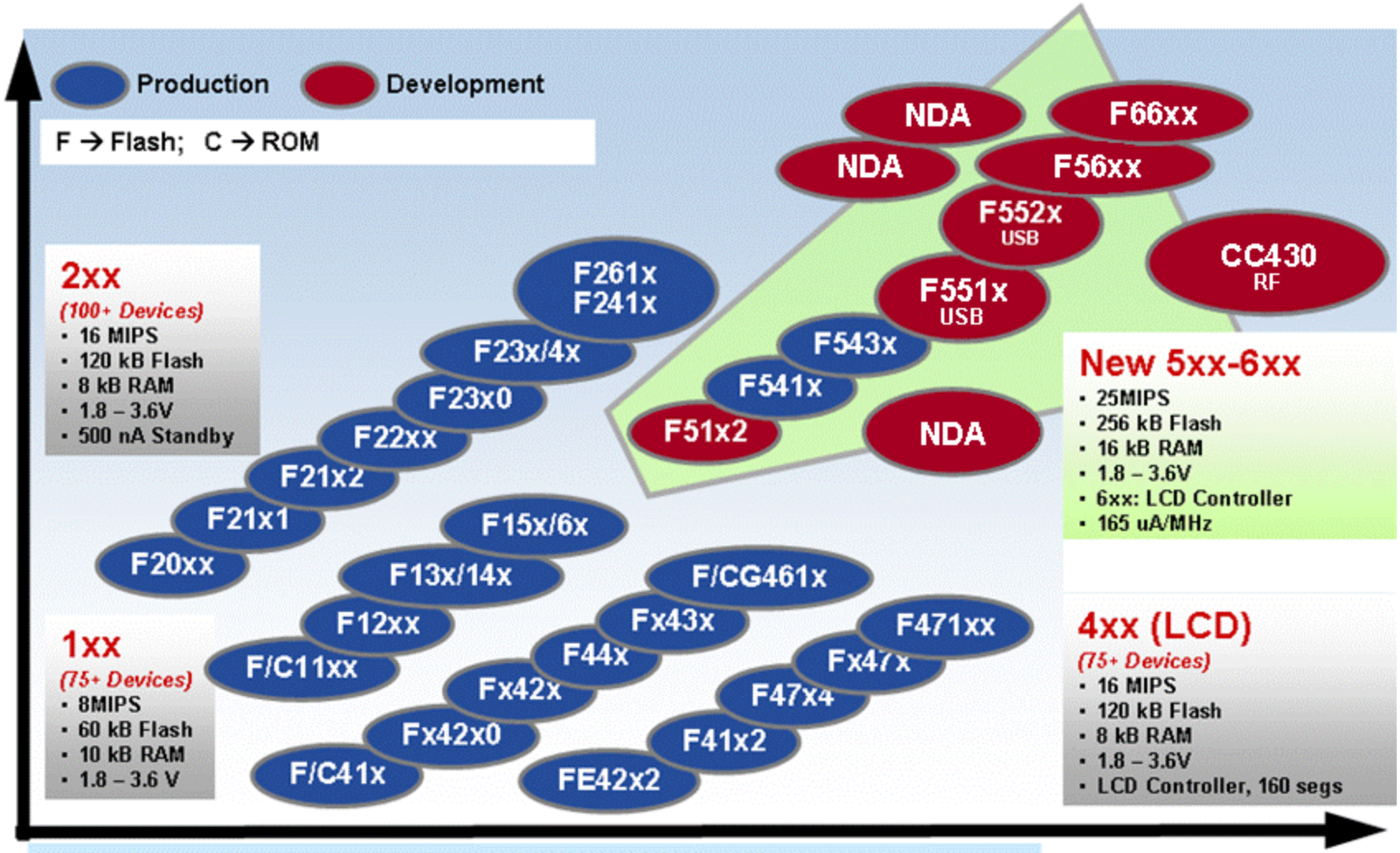

Analog integration:	ADC10/12, 16-bit sigma delta, 12-bit DAC, OpAmps
Digital peripherals:	16×16/32×32 multiplier, DMA, HW RTX, AES encryption
Communications:	USB, RF, UART, I2C, SPI, LIN, IrDA

MSP430 Generations

		2xx	4xx	5xx/6xx
CPU Clock (Max)		16MHz	8MHz	25MHz
Flash/RAM (Largest comparable device)		120KB / 4KB (F24xx)	120KB / 4KB (FG46xx)	256KB / 16KB (F54xx)
Active Current (3.0V) uA/MIPS	1MHz	515 µA	600 µA	220µA
	8MHz	525 µA/MIPS	600 µA/MIPS	165 µA/MIPS
	16MHz	569 µA/MIPS	N/A	188 µA/MIPS
	25MHz	N/A	N/A	224 µA/MIPS
Standby Current (LPM3)		0.9 – 1.1µA	1.1 – 2.5µA	2.6µA (w/ active true RTC)
Power Down Current (LPM4/5)		0.1µA	0.1µA	1.6µA (LPM4) / 0.1µA (LPM5)
Wake-up Time From LPM3		1µs	6µs	5µs
Flash ISP Minimum DV_{CC}		2.2V	2.7V	1.8V
Port I/O Interrupt Capability		P1/P2	P1/P2	P1/P2 (F5438) Add'l pins in future devices
Prog. Port Pin Drive Strength		N/A	N/A	All port pins
Prog. Pull-ups/-downs		All port pins	N/A	All port pins
Available MCLK Sources		DCO, VLO, LFXT1, XT2	FLL, LFXT1, XT2	FLL, VLO, REFO, XT1, XT2
FLL Reference Clocks		N/A	LFXT1	REFO, XT1, XT2

MSP430 Peripheral Overview

1xx	2xx	4xx	5xx/6xx
Basic Clock System	Basic Clock System +	FLL, FLL+	Unified Clock System
Core voltage same as supply voltage (1.8-3.6V)	Core voltage same as supply voltage (1.8-3.6V)	Core voltage same as supply voltage (1.8-3.6V)	Programmable core voltage with integrated PMM (1.8-3.6V)
16-bit CPU	16-bit CPU, CPUX	16-bit CPU, CPUX	16-bit CPUXv2
GPIO	GPIO w/ pull-up and pull-down	GPIO, LCD Controller	GPIO w/pull-up and pull-down, drive strength
N/A	N/A	N/A	CRC16
Software RTC	Software RTC	Software RTC with Basic Timer, Basic Timer + RTC	True 32-bit RTC w/Alarms
USART	USCI, USI	USART, USCI	USCI, USB, RF
DMA up to 3-ch	DMA up to 3-ch	DMA up to 3-ch	DMA up to 8-ch
MPY16	MPY16	MPY16, MPY32	MPY32
ADC10,12	ADC10,12, SD16	ADC12, SD16, OPA	ADC12_A
4-wire JTAG	4-wire JTAG, 2-wire Spy Bi-Wire (Some devices)	4-wire JTAG	4-wire JTAG, 2-wire Spy Bi-Wire

5xx Architectural Advances

- **Ultra-Low Power**
  - 165 µA/MIPS
  - 2.5 µA standby mode
  - Integrated LDO, BOR, WDT+, RTC
  - 12 MHz @ 1.8V
  - Wake up from standby in <5 µs
- **Increased Performance**
  - Up to 25 MHz
  - 1.8V ISP Flash erase and write
  - Fail-safe, flexible clocking system
  - User-defined Bootstrap Loader
  - Up to 1MB linear memory addressing
- **Innovative Features**
  - Multi-channel DMA supports data movement in standby mode
  - Industry leading code density
  - More design options including USB, RF, encryption, LCD interface

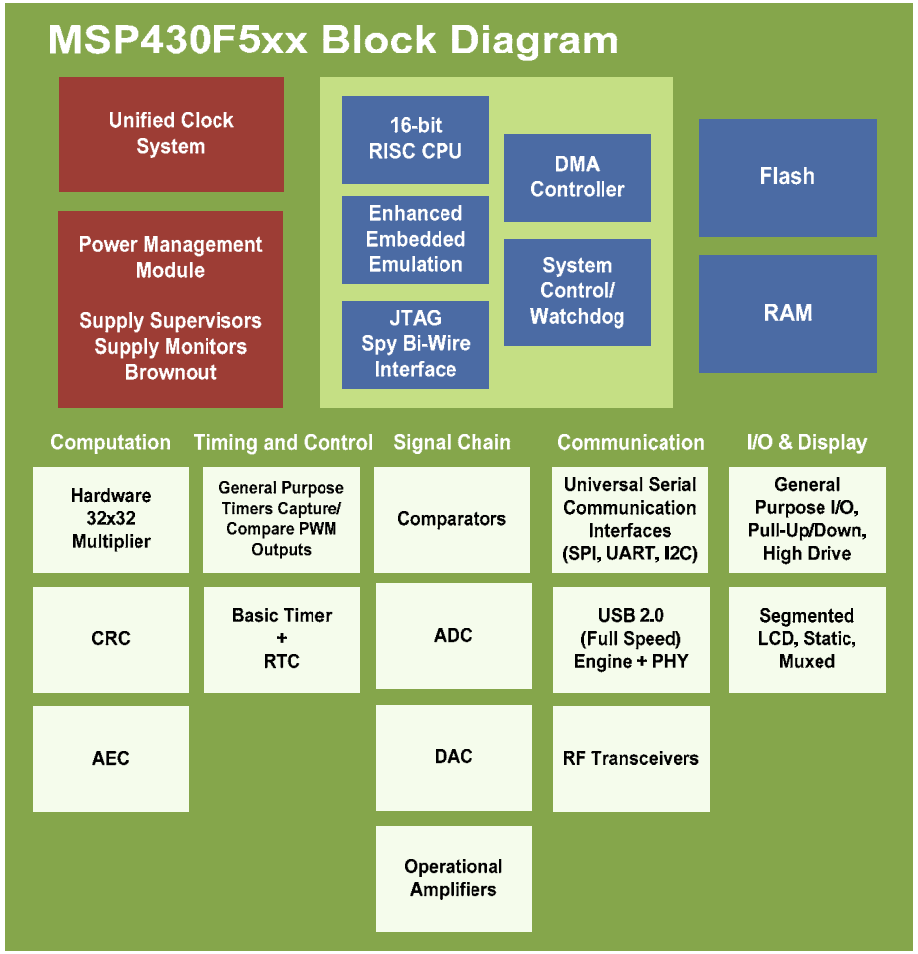

MSP430 F5xx Operating Range

- 25MHz peak performance
- More performance across V_{CC} range
  - Flash ISP @ min. V_{CC}
  - 12MHz @ min. V_{CC}
  - 25MHz @ 2.4V-3.6V
- Programmable V_{CORE} maximizes power efficiency
- Lowering V_{CC} or V_{CORE} reduces system current

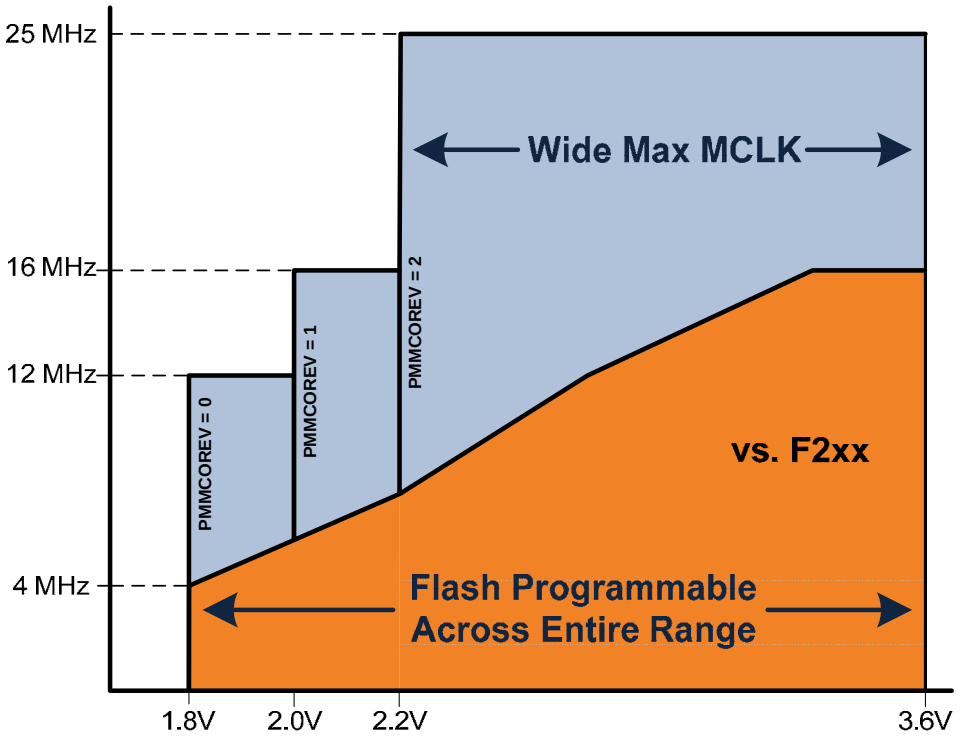

F5xx: Power Management Module

- Integrated LDO
- V_{CORE} level programmable
- Flexibility in processing performance vs. power
- Integrated *supervision & monitoring*
- *Zero-power* BOR
- Five integrated mechanisms
  - SVSH, SVSL, SVMH, SVML & BOR

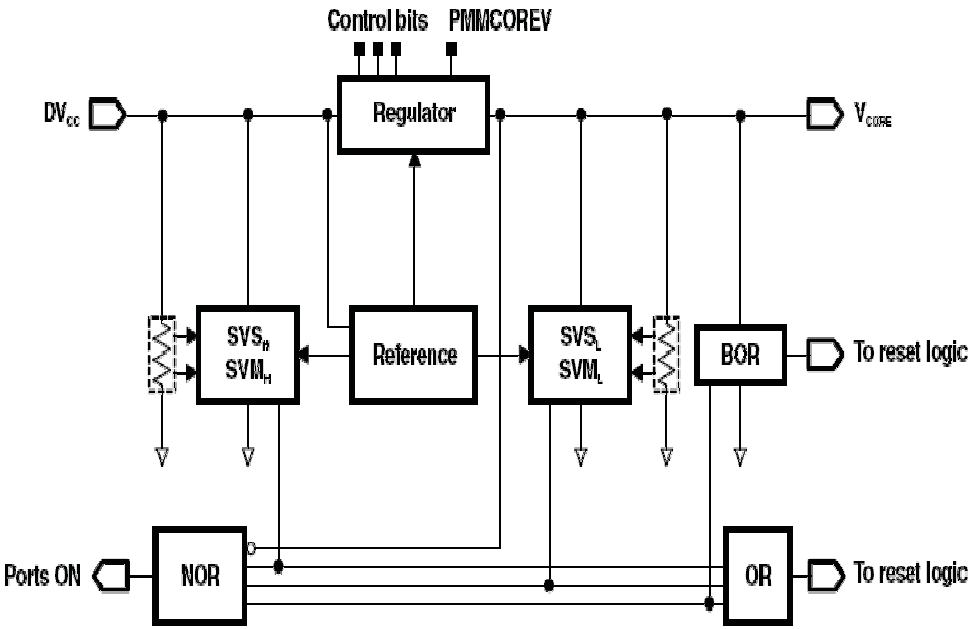

F5xx: Unified Clock System

- Orthogonal clock system
  - Any source can drive any clock signal
- 2 Integrated clock sources:
  - REFO: 32kHz, trimmed osc.
  - VLO: 12kHz, ultra-low power
- DCO & FLL provide high frequency accurate timing
- MODOSC provides bullet proof timing for Flash
- Crystal pins muxed with I/O function

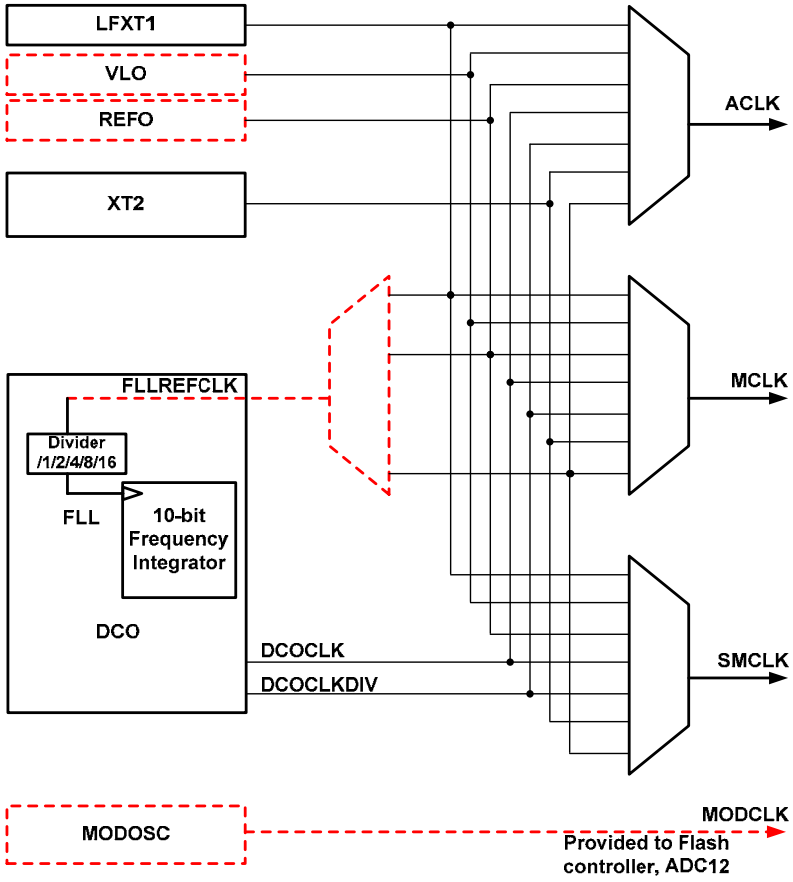

Review of Available Clocks

Clock	Frequency	Precision	Current Draw	Crystal Required
High-Frequency				
DCO	**100kHz – 60MHz**	**Low**	**60uA**	
HFXT1/ XT2	**4 - 32MHz**	**High**	**60uA @ 12MHz**	**X**
MODOSC	**5MHz**	**n/a**	**n/a**	
Low-Frequency				
LFXT1	**32kHz**	**High**	**300nA**	**X**
VLO	**12kHz**	**Low**	**~60nA**	
REFO	**32kHz**	**Medium/High**	**3uA**	

Migration: 2xx/4xx → 5xx

- UCS & PMM setup required
- USCI requires additional changes to interrupt handling
- Other considerations:
  - Change port register specifics
  - Change any fixed address locations
  - Re-write clocking / NMI code
  - Adjust interrupt handling in various modules to use IV registers
  - Minor register/field name tweaks
    (SHT bits in ADC12 now ADC12SHT)

➢ F5xx Quick Start Guide (SLAA395) documents changes

Agenda

- Overview of TI‘s µC portfolio
- MSP430 Roadmap & Generations
- Main features of the MSP430
- MSP430 in Industrial Applications
- MSP430 with USB on Chip
- MSP430 & E-Meter Applications
- 1st MSP430 with integrated SRD RF-Transceiver
- MSP430 Tools / Update
- MSP430 and FRAM

What is an MSP430?

Performance
- 8-25 MHz RISC CPU
- Industry leading code density
- Flexible clock system
- Single-cycle register operations
- 16 GP 16-bit Registers
- No accumulator bottleneck

Integration
- 14 to 113 pin devices
- 1-256kB Flash/ROM
- 10-/12-/16-bit ADC
- 12-bit D/A, LCD Drivers, RTC, DMA
- Comparators and Op Amps
- Supply Voltage Supervisor & BOR
- 16-bit and 8-bit timers; WDT
- I2C, SPI, UART/LIN, IrDA
- >20 New devices in 2009

Low Power
- ***Industry's Lowest Power***
- Standby <1uA
- Includes RTC and BOR
- Active 160 µA/MIPS
- Fast wake-up <1 µs
- Internal voltage regulator
- 4 Programmable voltage levels
- <50 nA pin leakage

Ease of Use
- C friendly IDE and compiler
- Embedded emulation
- Trace, single-stepping, in-system debug
- Intelligent peripherals reduce overhead
- DTC, DMA, Autoscanning A/D
- Free/Low cost dev tools

16-bit Orthogonal RISC CPU

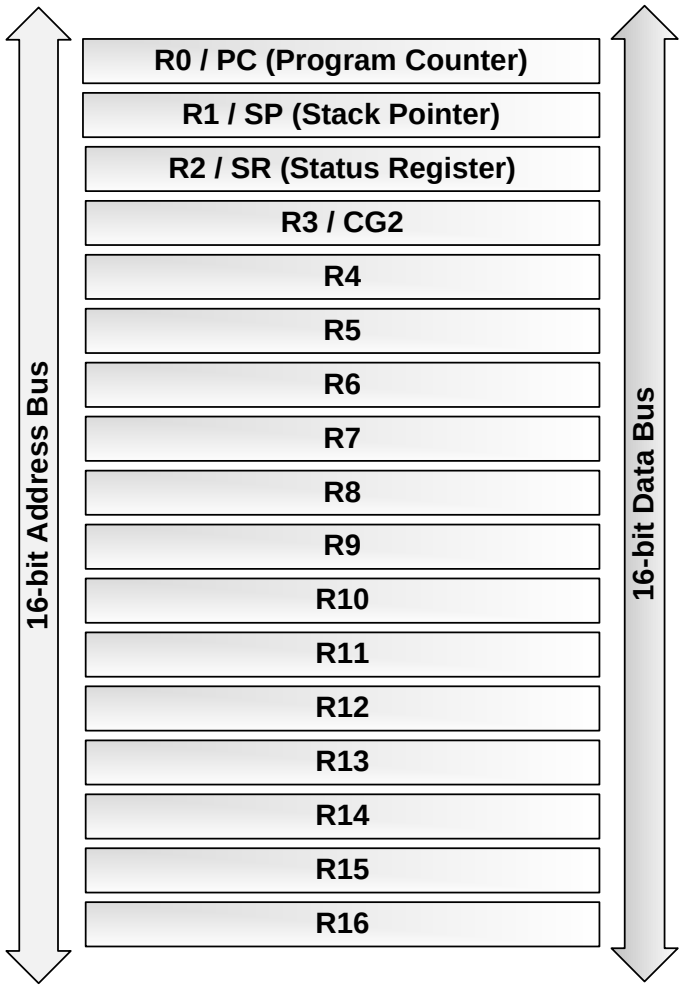

- C-compiler friendly
- No accumulator bottleneck
- RISC architecture
  - 27 core instructions
  - 24 emulated instructions
  - 7 addressing modes
  - Constant generator
- Single-cycle register operations
- Memory-to-memory atomic addressing
- Bit, byte and word processing

Ultra-Low Power Activity Profile

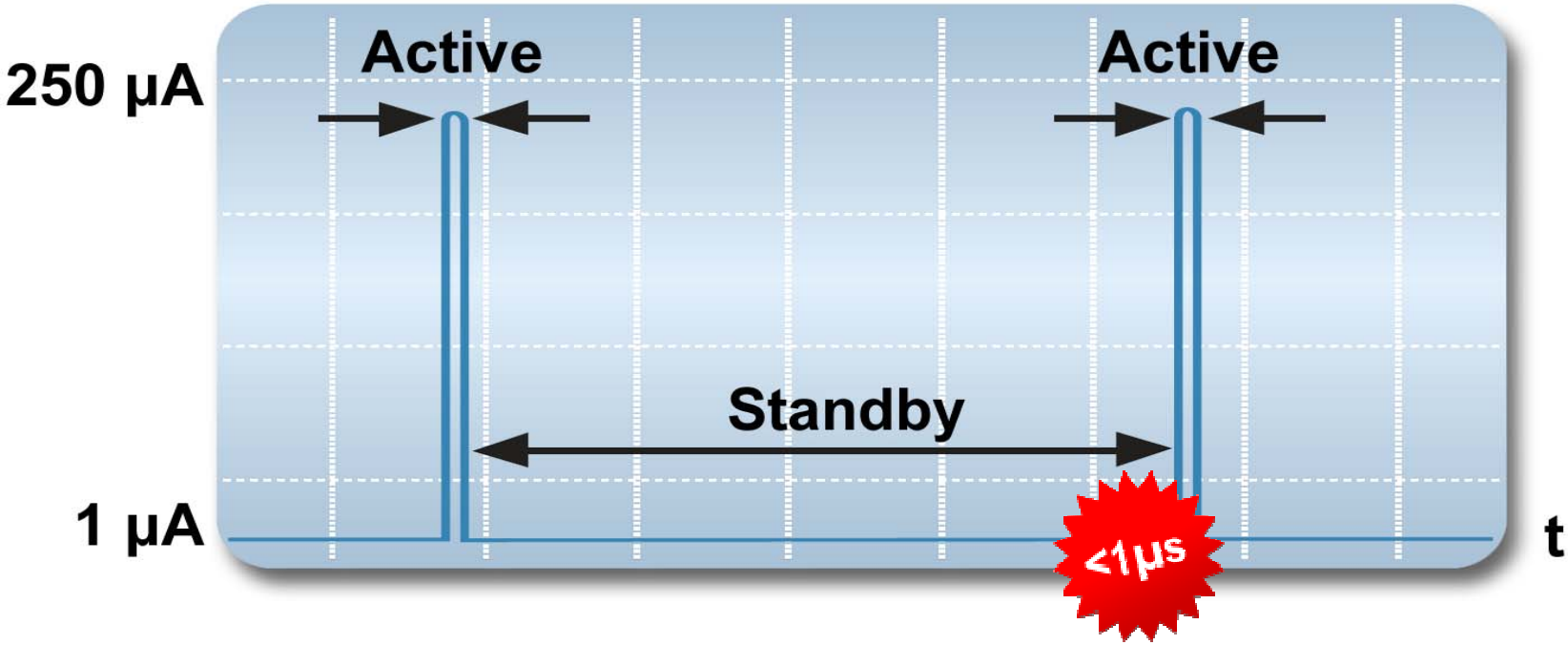

- Extended *Ultra-Low Power* standby mode
- Minimum active duty cycle
- Interrupt driven performance on-demand

Ultra-Low-Power High Performance

Device Configurations

- 16-bit RISC CPU up to 25MHz
- 1-KB to 256-KB ISP Flash
- RAM up to 16 KB
- 0.1uA power down, 0.8uA standby
- 160uA/Mhz
- 1us clock startup
- 14- to 100-pin options

Integrated Peripherals

- 10-/12-bit SAR ADC
- 16-bit Sigma Delta ADC
- 12-bit DAC
- Comparators and Op Amps
- LCD driver
- Supply Voltage Supervisor (SVS) & BOR
- 16-bit and 8-bit timers; WDT
- I2C, SPI, UART/LIN, IrDA
- 16 & 32-bit Hardware multipliers
- RTC
- DMA controller
- Temperature sensors
- RF
- USB

Application Areas

Metering
- Electricity meter (1 to 3 phase)
- Water meter
- Gas meter
- Heat Cost Allocation
- Heat Volume Counter
- Auto Meter Reading (AMR) with low-end PLC
- Adv Metering Infrastructure with RF (sub 1GHz to ZigBee)
- Energy Monitor

Portable Measurement
- Multimeters (voltage, current)
- Temperature measurement
- Pressure meters
- pH meters
- Data logger
- Power meters

Consumer
- Cell phone, Digital camera, MP3
- Sport watch and sensors
- Toothbrush, Shaver
- Remote control
- Self-learning universal remotes
- Wireless keyboard/mouse
- Feature/Option-rich appliances
- Power saving Appliances
- Power tools
- Basic smart card readers

Building Automation / HVACs
- Gas boiler control; Air flow control
- Thermostats (wired and RF)
- Window control/ Blinds control
- Smart sensors (temperature, humidity, rain, light)
- Basic Programmable Logic Controller (PLC)
- Sanitary control
- EIB controllers; I/O modules
- Circuit breakers
- Lighting control
- Basic motor control

Industrial Automation & Control
- Flow metering
- Level measurement
- Pressure sensors
- Telemetry
- Machine supervision
- Simple pumps
- Fuel dispensers
- Renewable energy (Hydro/Solar/Wind)
- Energy harvesting

RF networks
- Sensor networks

Medical
- Medical
- Glucose meters
- Cholesterol meters
- Thermometer
- EKG (wireless / wired)
- Heart rate monitor
- Pulse oximeter
- Personal medical devices
- Electronic stethoscope
- Biometric measurement
- Implantable
- Defibrillators
- Fitness machines
- Pregnancy testers
- Fertility monitors
- E-pills
- Drug delivery systems

Security
- Security / Alarm system
- Intrusion detection & control
- Movement detection
- Access control system
- Smoke & fire detector
- Wireless sensors
- Voice-prompt systems
- Voice activation
- Wireless asset tracking

Agenda

- Overview of TI‘s µC portfolio
- MSP430 Roadmap & Generations
- Main features of the MSP430
- MSP430 in Industrial Applications
- MSP430 with USB on Chip
- MSP430 & E-Meter Applications
- 1st MSP430 with integrated SRD RF-Transceiver
- MSP430 Tools / Update
- MSP430 and FRAM

MSP430 for industrial sensors

- Level
  - Electromechanical, Ultrasonic, Capacitance,
  - Hydrostatic/Differential pressure, etc.
- Pressure
  - Differential, Hydrostatic, etc.
- Flow
  - Electromagnetic, Vortex, Coriolis, Ultrasonic, etc.
- Liquids Analysis
  - pH, oxygen, etc.

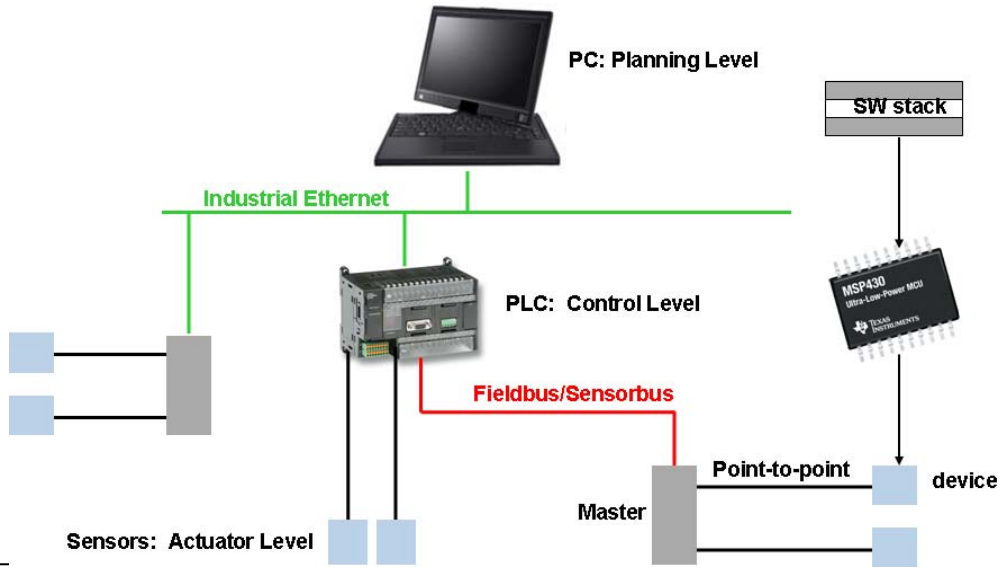

MSP430F2274 for industrial sensors

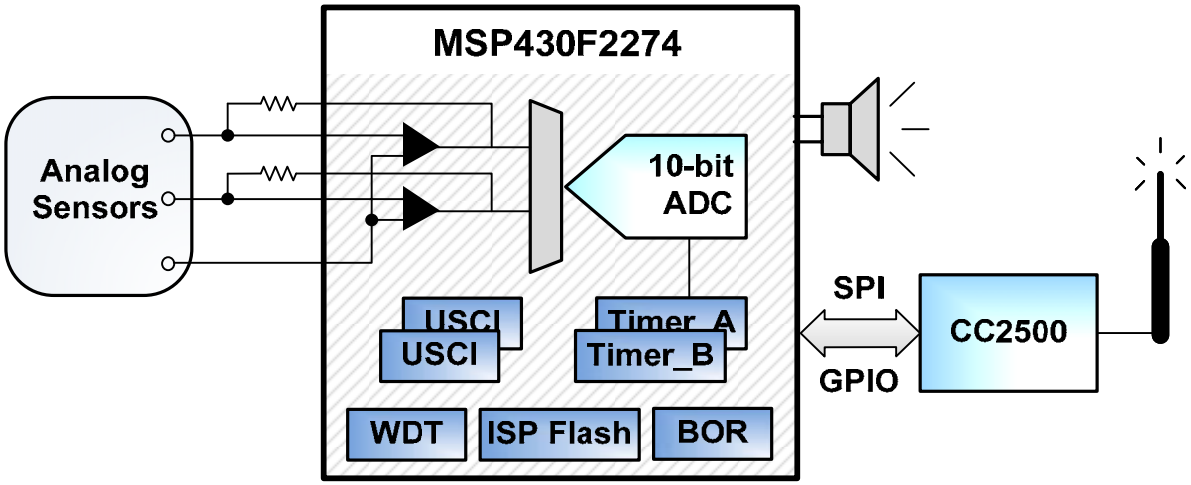

- 32KB Flash / 1KB RAM
- 16 MIPS, <1µA LPM3
- USCI (UART, SPI, I2C, IrDA)
- 10-bit 200ksps ADC
- 2 Op Amps
- 32 GPIO

MSP430 and IO-Link

- IO-Link Architecture

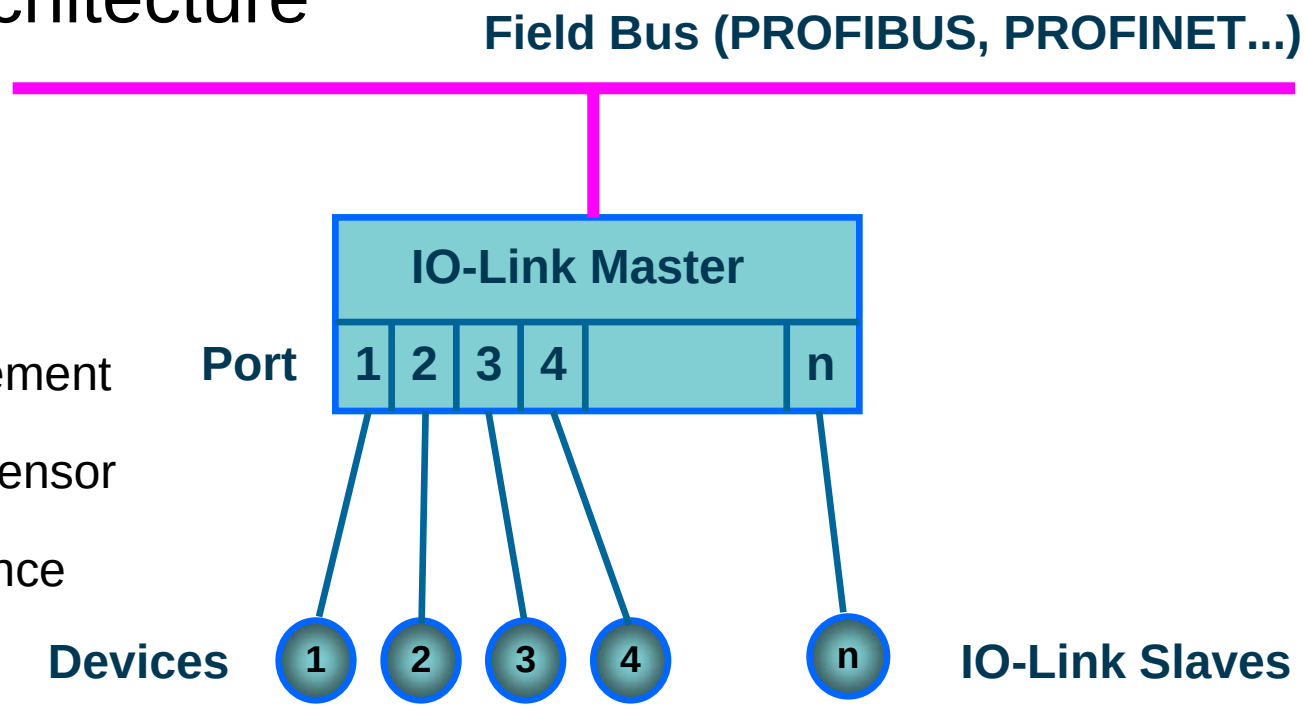

Advantages

- Reduced wiring
- Plug & Play replacement of sensors
- Flexible setting of sensor parameters
- Reduced maintenance times
- Simpler handling of failures in running production

MSP430 and IO-Link

- IO-Link EVK

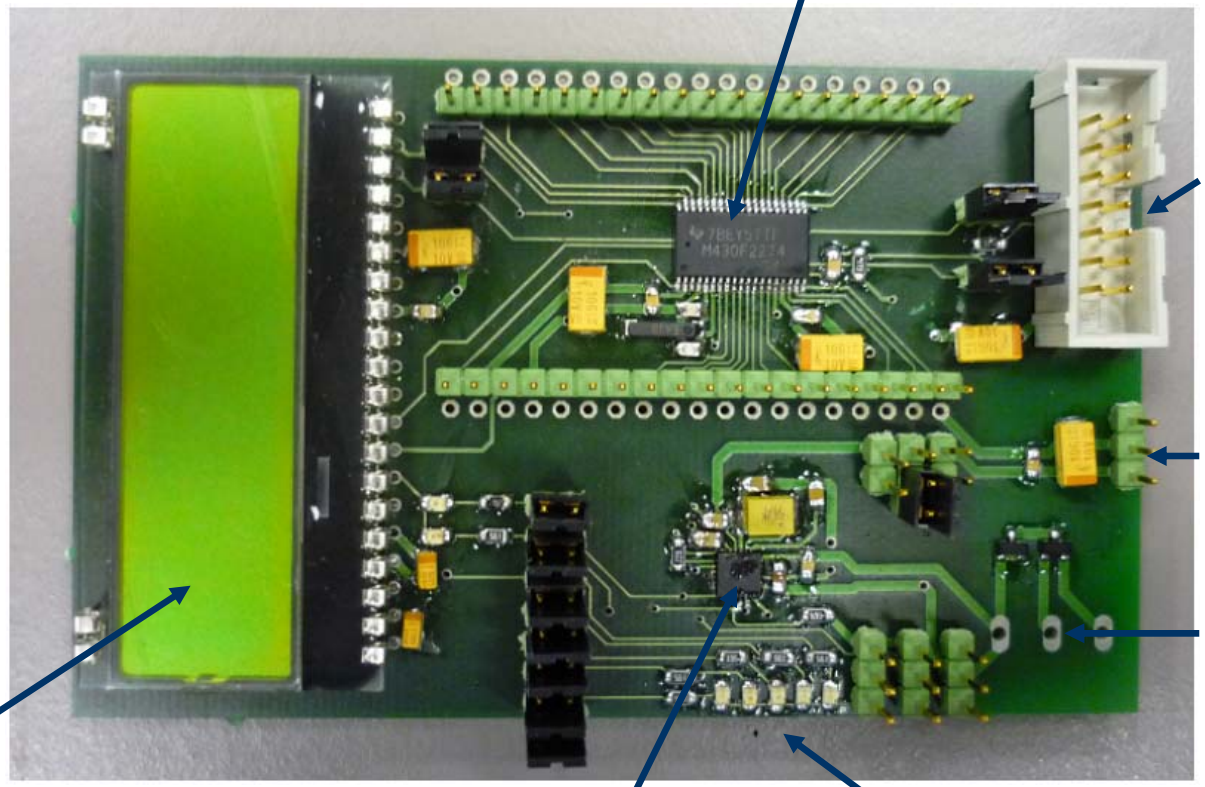

Agenda

- Overview of TI‘s µC portfolio
- MSP430 Roadmap & Generations
- Main features of the MSP430
- MSP430 in Industrial Applications
- MSP430 with USB on Chip
- MSP430 & E-Meter Applications
- 1st MSP430 with integrated SRD RF-Transceiver
- MSP430 Tools / Update
- MSP430 and FRAM

MSP430F54xx(A)
1st MSP430F5xx Device

Performance
- 16-bit Orthogonal RISC Microcontroller
- Ultra-Low-Power; Integrated Intelligent Peripherals; Easy-to-Use

Power
- Low Supply Voltage Range 1.8 to 3.6 V
- Ultra-low Power Consumption
  - Active Mode: 165 µA / MHz
  - Standby Mode (LPM3 RTC Mode): 2.6 µA
  - Off Mode (LPM4 RAM Retention) : 1.6 µA
  - Off Mode (RAM Retention): 0.1 µA
- Ultrafast Wake-Up from Standby Mode in < 5 µs

Package
- 100-Pin PZ (LQFP): 16.20×16.20mm (F5418/35/37)
- 80-Pin PN (LQFP): 14.20×14.20mm (F5419/36/38)
- 113-Pin ZQW (BGA): 7.1×7.10mm (F5418/35/37)

Benefits
- Real-Time Clock module with alarm capabilities
- A 12-bit A/DC with temperature sensing
- A Single-cycle hardware multiplier
- CRC16 data checker, and up to 83 I/O pins

Applications include:
- Analog and digital sensor systems
- Digital motor control
- Remote controls
- Thermostats and digital timers
- Hand-held meters

Development Board and Programmer
- MSP-FETS430U5x100: 100-Pin PZ (TQFP), $149
- MSP-TS430PZ5x100: Board only, 100-Pin PS (TQFP), $49
- MSP-FET430UIF: USB Prog Interface only, $99

MSP430F54xx(A) Microcontroller

16-bit RISC Orthogonal MCU
25 MHz

Memory
- 128 / 192 / 256kB Flash
- 16KB RAM

Debug
- JTAG w/ 8 Breakpoints
- Embedded Emulation
- Boot Strap Loader

Power & Clocking

Unified Clock System:
FLL VLO
REFO DCO
LFXT1 XT2

PMM:
POR BOR
SVS SVM
LDR

Peripherals
- 32 x 32 Hardware Multiplier
- 3-ch Internal DMA
- CRC16 Data Checking Module

Serial Interface
- 2-4 × USCI A (UART/I2C/SPI)
- 2-4 × USCI B (I2C/SPI)

Converters
- 16-ch, 12-bit A/D Converter

Connectivity
- 64 I/Os (83 I/Os => F5438/36/19)

Timers
- 32-bit Watch Dog
- 16-bit Basic
- 16-bit A5, with 5 CC Registers
- 16-bit A3, with 3 CC Registers
- 16-bit B7, with 7 CC w/ Shadow Registers
- Real-Time Counter A

MSP430F552x 1st MSP430 with USB

Performance
- 16-bit RISC Microcontroller
- Ultra-Low-Power, Integrated Intelligent Peripherals and Easy-to-Use

POWER
- Wide Supply Voltage Range 1.8 V to 3.6 V
- Ultra-low Power Consumption
  - Active Mode: 160 µA / MHz
  - Standby Mode (LPM3 RTC Mode): 1.5 µA
  - Off Mode (LPM4 RAM Retention) 1.0 µA
  - Shutdowm Mode (LPM5): 0.1 µA
- Ultrafast Wake-Up from Standby Mode in < 5 µs

Package
- 64-Pin RGC (QFN): 9.1mm x 9.1mm
- 80-Pin PN (QFP): 14.2mm x 14.2mm
- 80-Ball ZQE (BGA) 5.1mm x 5.1mm

Benefits
- Integrated LDO enables full system power off 5V USB line
- USB PLL can adapt to wide range of crystal frequency starting at 1.5MHz
- Timestamp generator with 62.5 ns resolution
- 2K USB RAM can also be used as system RAM if USB is disabled

Applications
- Portable business tools
- Computer peripherals and accessories
- Gaming and toys
- RF-ID readers
- Digital cameras
- Hand-held instrumentation

Development Board
- TS430PN80USB (Target board) $75

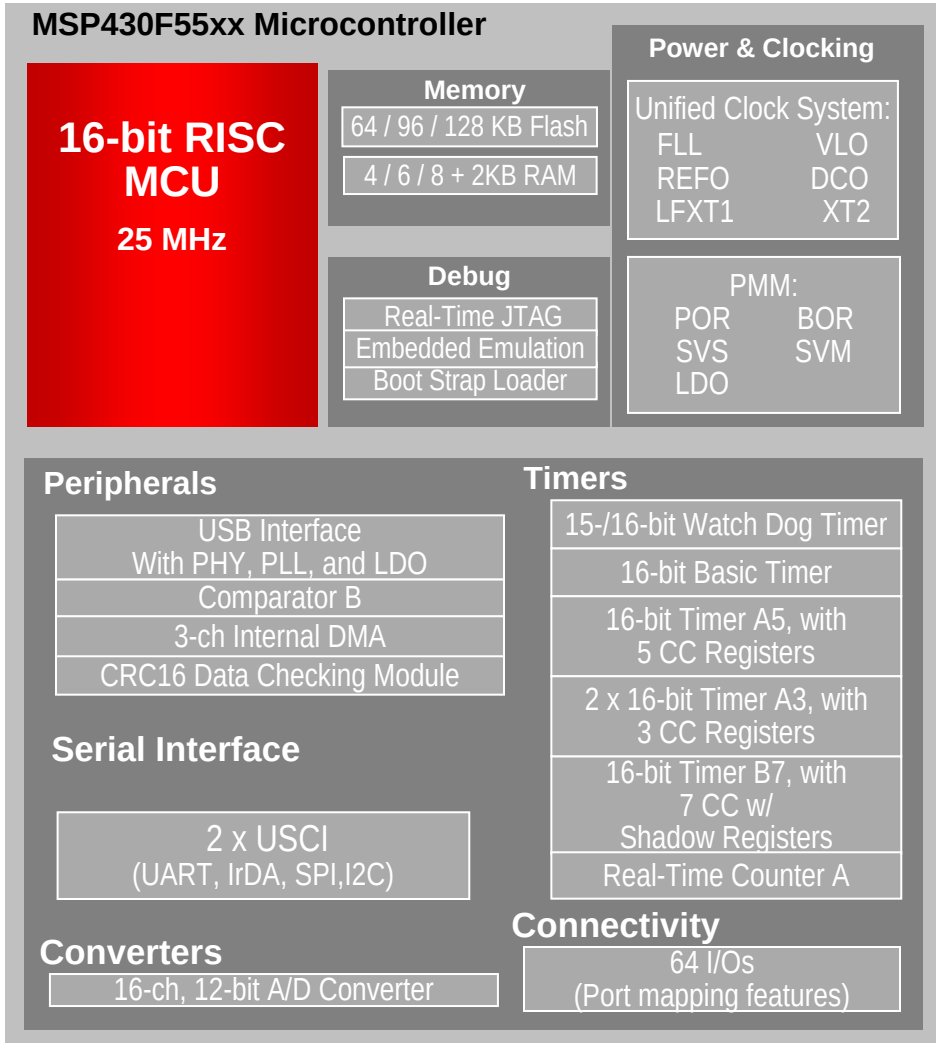

Speeds

- USB has three speeds:
- Low-speed (1.5Mbps)
  - Full-speed (12Mbps)
  - High-speed (480Mbps)
- MSP430's USB is full-speed, for applications such as:
  - Uploading data from a mobile device
  - Downloading a firmware update
  - Controlling/configuring a device

Role in the Bus

- A component on the bus is either a…
  - *Host* (the master). Exactly one in any given bus tree.
  - *Device* (aka *peripheral* or *function*). May be many in any given bus tree.
  - *Hub* (neither master nor slave; allows for expansion)
- MSP430's USB acts as a *device*
  - Designed to talk to a host (PC, cell phone, PDA, etc.)

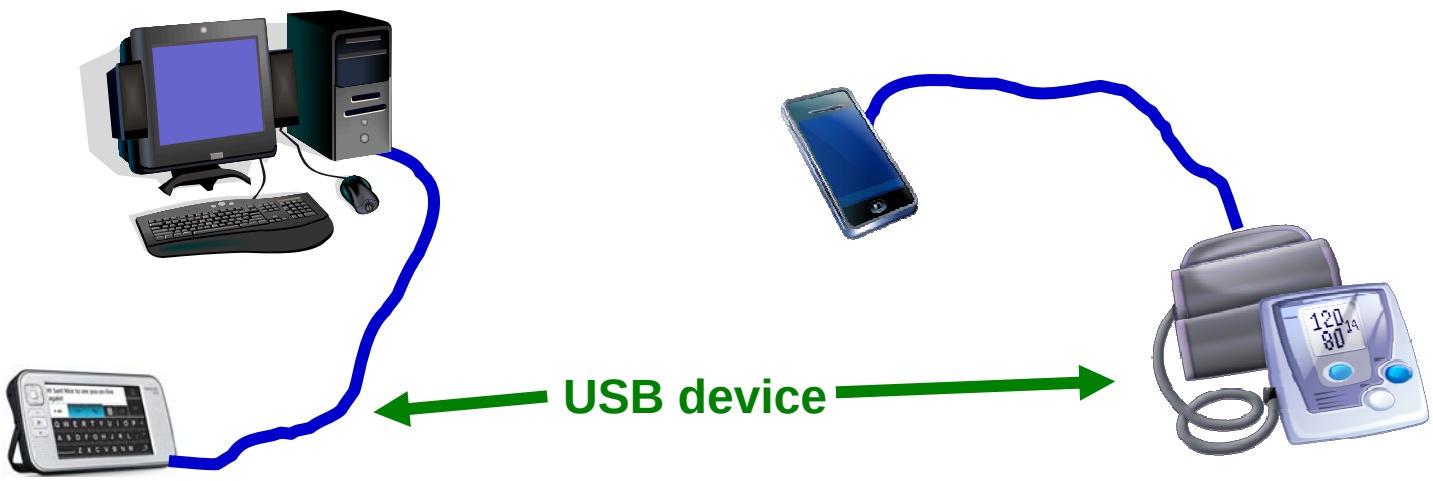

Data Transfer

- Four data transfer types
  - Control
  - Interrupt
  - Bulk
  - Isochronous
- Usage determined by your choice of *device class*
  - So mostly, you don't have to think about these
- MSP430 supports control/interrupt/bulk transfers:
  - Any application transferring bulk data (rather than streaming)
  - Any control/configuration application
  - Any firmware update application

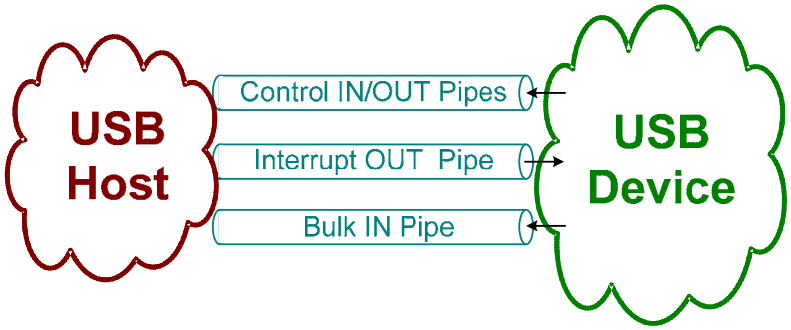

Power Handling

- Host must be able to source 5V power to the device
- Most IC's operate at 3.3V
  - So they require an LDO in order to draw power from VBUS
- MSP430 integrates the LDO
  - Operate directly from 5V VBUS; no need to buy an LDO
  - Can even source power off-chip to your system!

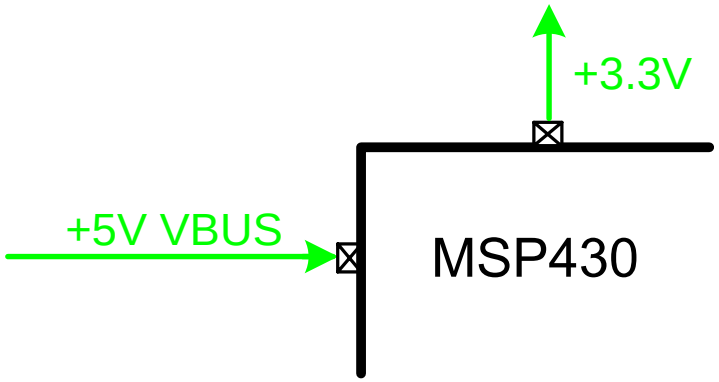

USB Power System (UPS)

- Independent of the MSP430 Power Management Module
- There are actually two LDOs
  - 5V→3.3V
  - 3.3V→1.8V
- 3.3V output provided externally
  - DVCC can be powered from 3.3V VUSB
  - Can even drive the system, up to 12-20mA
  - Or, drive DVCC from external supply

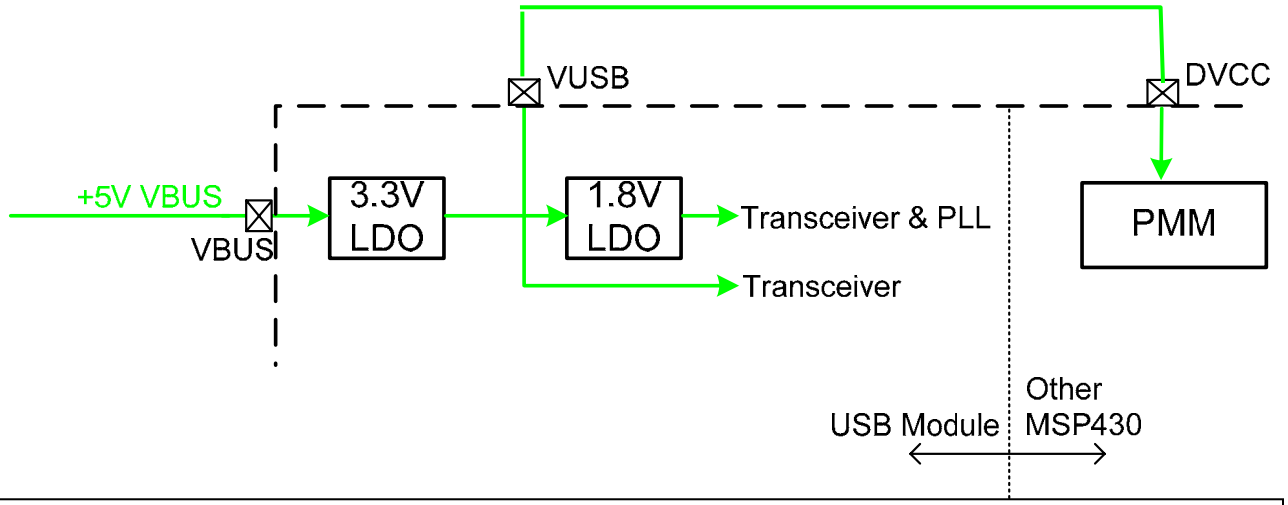

Power Scenarios

- Devices can be:
  - Bus-powered
  - Self-powered
  - Mixed-powered
  - Switched-off between

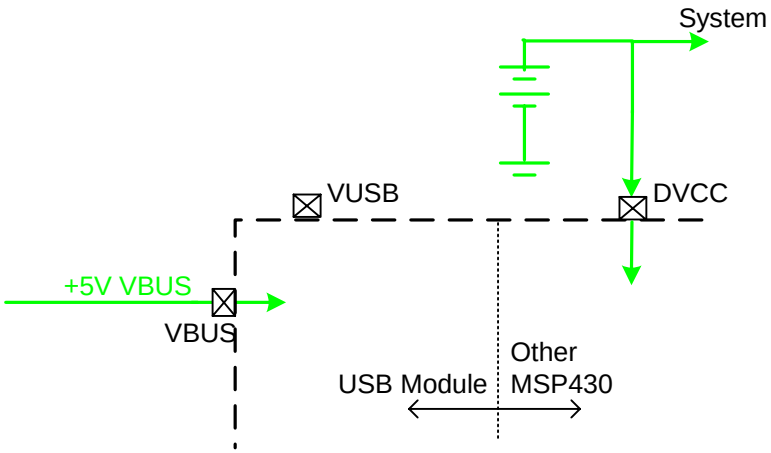

Mixed

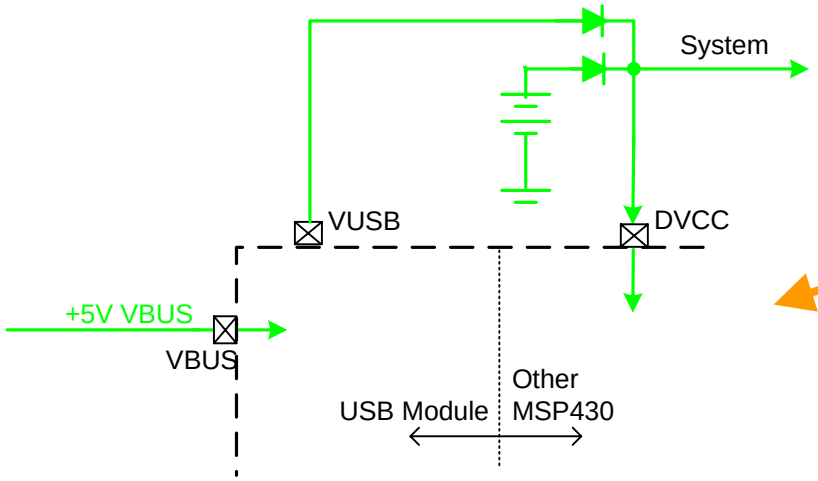

Switch off between

Lowest-power scenario for most battery-powered devices

Complete flexibility; design the RIGHT power system for your application

Higher-Current Systems

- If your system draws more current, use an external LDO

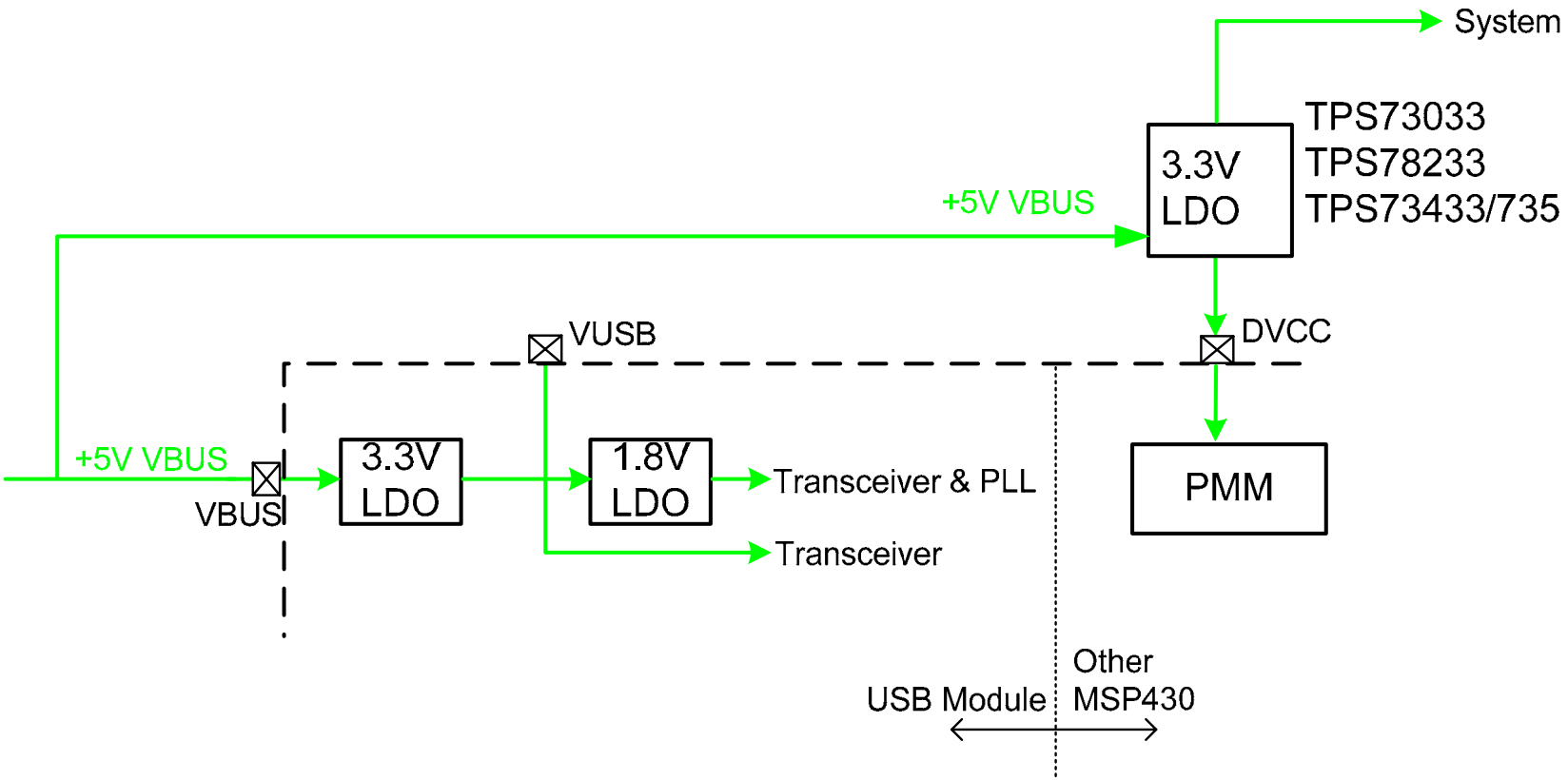

Rechargeable Batteries

- Can also use USB to recharge the battery

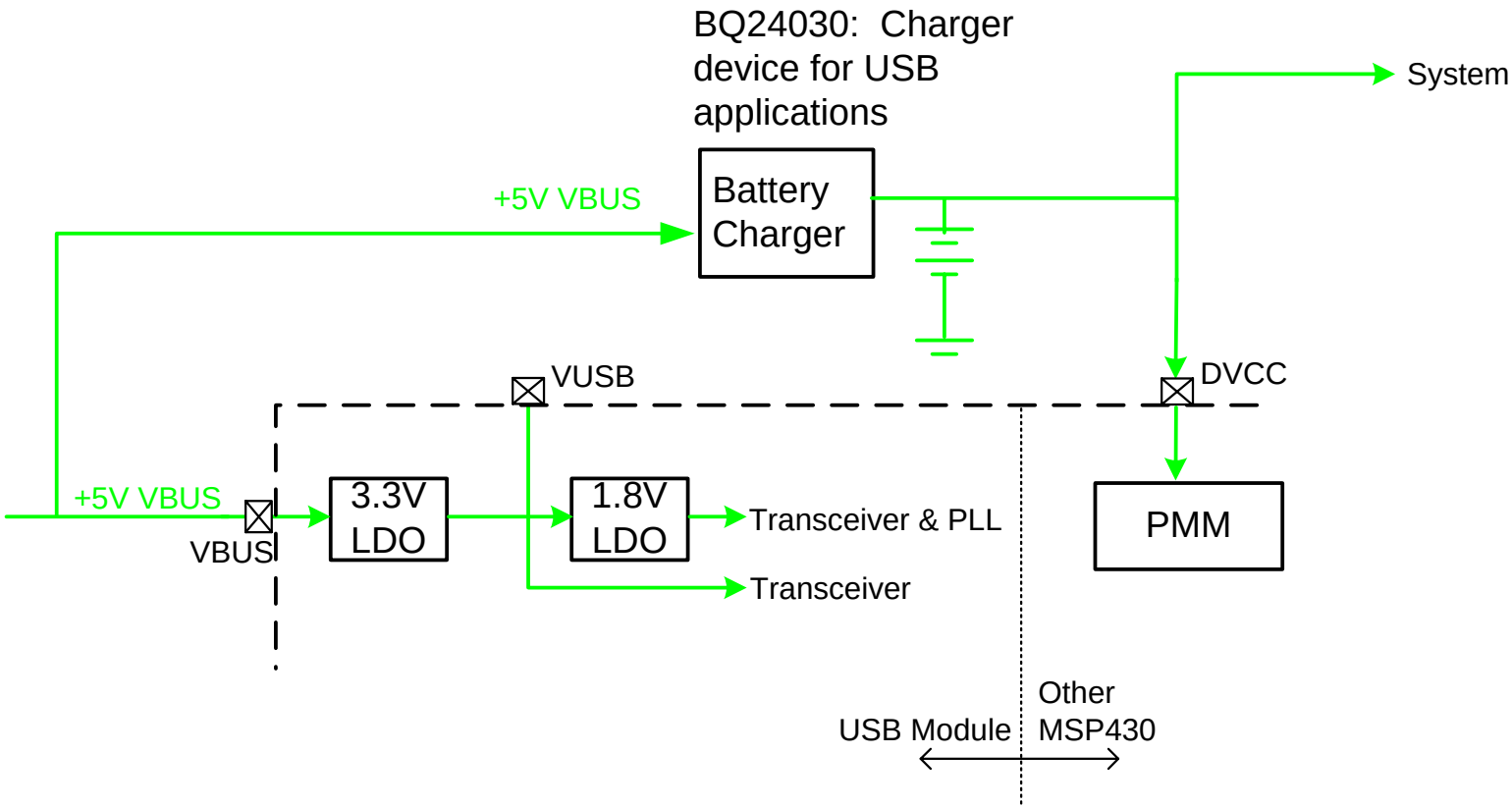

MSP430 USB System

- Single-chip USB solution
- Just add USB connector & TI-supplied USB API software
- USB+analog and ultra-low-power!

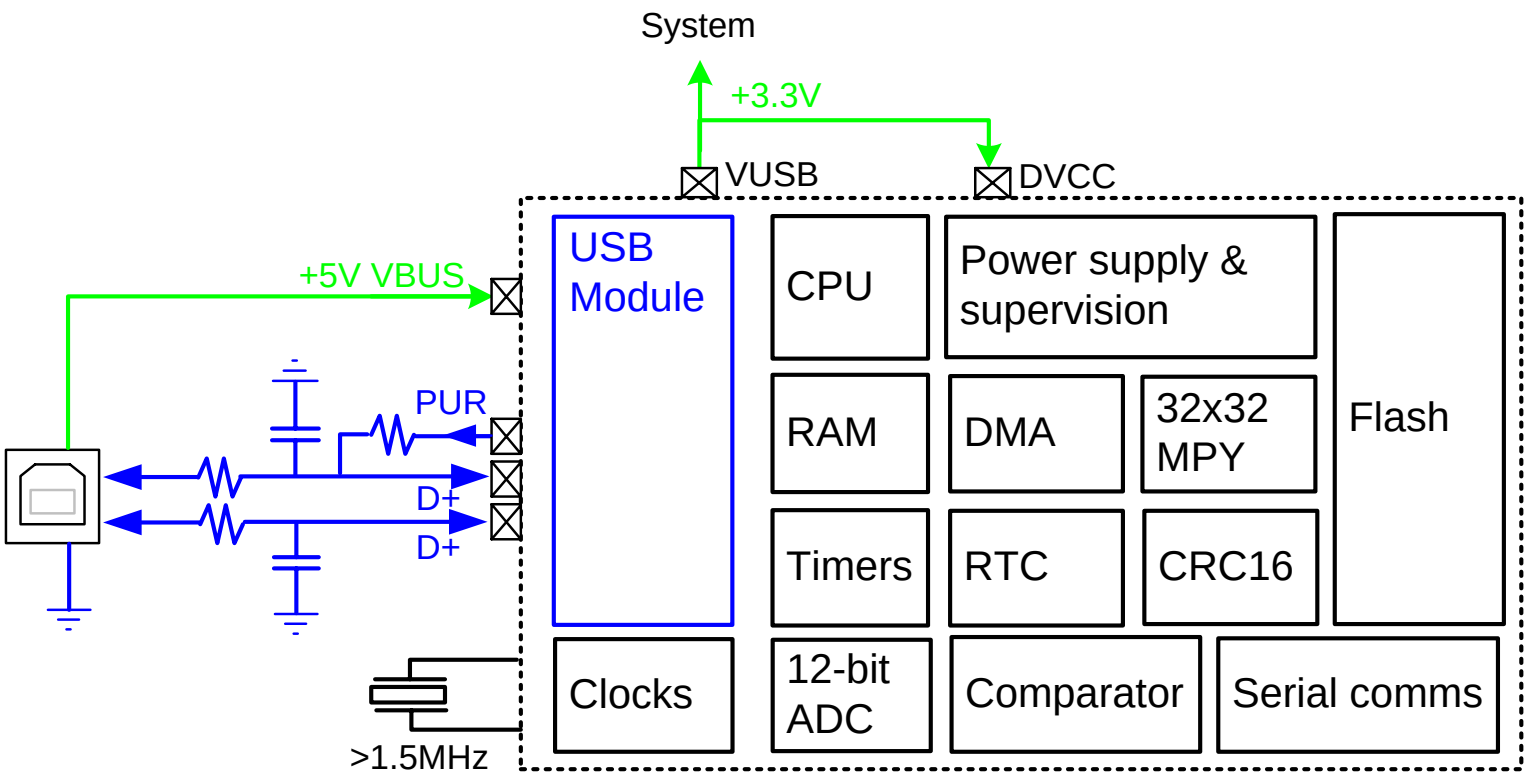

Support Philosophy / API Stacks

- USB looks simpler than it is
  - Expected to “just work”
  - A lot of protocol is involved; not like a UART or SPI port
  - But, the right support from the silicon vendor CAN make it easy
- MSP430’s USB support is designed for ease-of-use
  - Let’s you focus on *using* USB in your app, rather than *learning* USB as a technology
  - Our goal has been: to make using USB similar to using a UART
- Our primary support tool: API stacks
  - Essentially libraries, based on standard USB device classes
  - Can be edited (but shouldn’t be necessary for most apps)
  - Each stack supported by a complete Programmer’s Guide
  - Stacks will exist for the most common device classes (CDC/HID/MSC)

Device Class Tradeoffs

	CDC	HID	MSC
Simplicity on host	**Yes**	**Yes**	**Yes**
Simplicity on MSP430	**Yes**	**Yes**	**No**
Avoids user install process	**No**	**Yes**	**Yes**
High bandwidth	**Yes**	**No**	**Yes**
Code size	**4K**	**4K**	**10-20K**

Each class provides a unique value proposition

Agenda

- Overview of TI‘s µC portfolio
- MSP430 Roadmap & Generations
- Main features of the MSP430
- MSP430 in Industrial Applications
- MSP430 with USB on Chip
- MSP430 & E-Meter Applications
- 1st MSP430 with integrated SRD RF-Transceiver
- MSP430 Tools / Update
- MSP430 and FRAM

1-Phase Low Cost / MSP430FE42x2

Performance

- 16-bit Orthogonal RISC Microcontroller, 125ns Instruction Cycle Time
- Ultra-Low-Power, Integrated Intelligent Peripherals and Easy-to-Use

Power

- Low Supply Voltage Range 1.8 V to 3.6 V
- Ultra-low Power Consumption
  - Active Mode: 400µA / MHz, 3.0V
  - Standby Mode: 1.6µA
  - Off Mode (RAM Retention): 0.1 µA
  - Ultra-fast Wake-Up from Standby Mode in Less Than 6 µs

Package

- 64-Pin (QFP): 12.2mm x 12.2mm
- 48-Pin RGZ (QFN): 7.15mm x 7.15 mm

Benefits

- Embedded Signal Processing for Single-Phase Energy Metering With Integrated Analog Front-End and Temperature Sensor (ESP430CE1B)

Development Board and Programmer

- MSP-FET430U64 (target board and USB Prog I'face) $149
- Silicon Samples Available

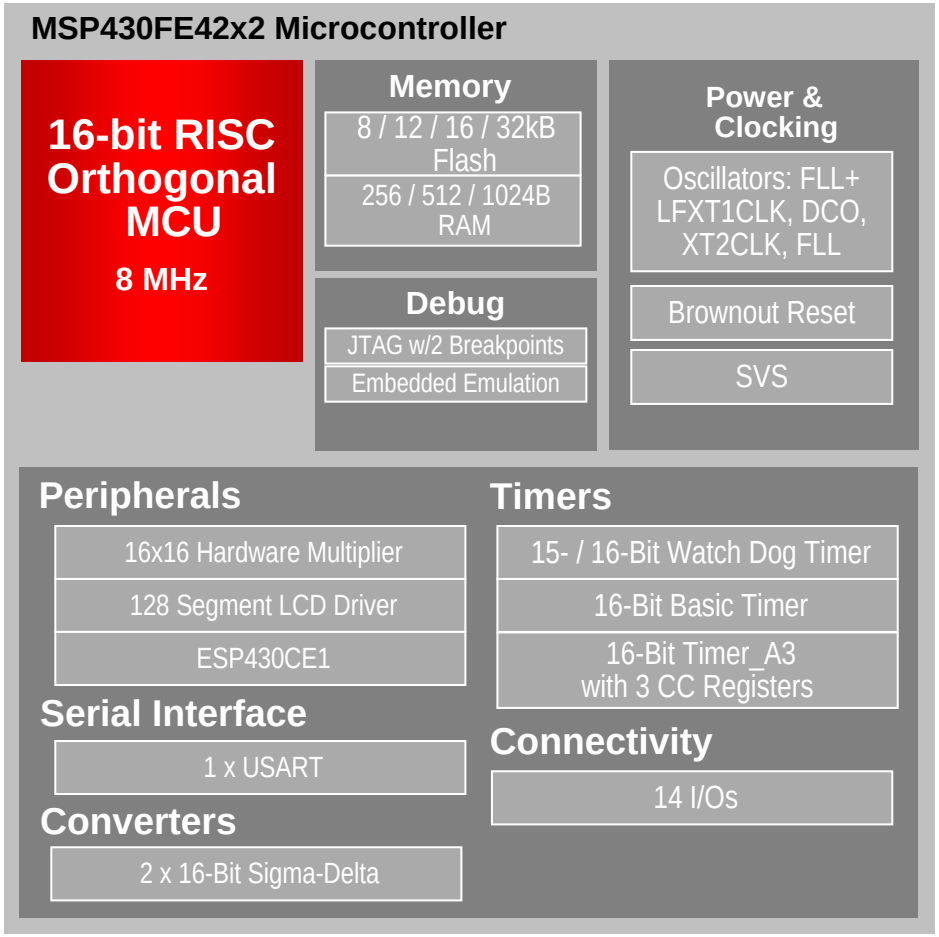

3-Phase / MSP430F471xx

Performance

- 16-bit RISC architecture, 62.5ns instruction cycle time
- Ultra-Low-Power, Integrated Intelligent Peripherals and Easy-to-Use

Features

- Power
  - Low Supply Voltage Range 1.8 V to 3.6 V
  - Ultra-low Power Consumption
    - Active Mode: 350 µA @ 1MHz (2.2V)
    - Standby Mode: 1.1 µA
    - Off Mode (RAM Retention): 0.2 µA
  - Ultrafast Wake-Up from Standby Mode in < 6 µs
- Package
  - 100-pin QFP (PZ) 16.20mm x 16.20mm

Benefits

- F471xx is the only integrated AFE solution with dedicated SD16's for 3-phase E-meter needs
- F471x7 supports tamper detection via a 7th SD16
- The 7th SD16 can also be used for high-precision measurements like temperature, voltage and humidity

Applications:

- Poly phase E-Metering
- High-precision measurements
- Anti-tampering

Development Board and Programmer

- MSP-TS430PZ471xx target board
- E-meter EVM

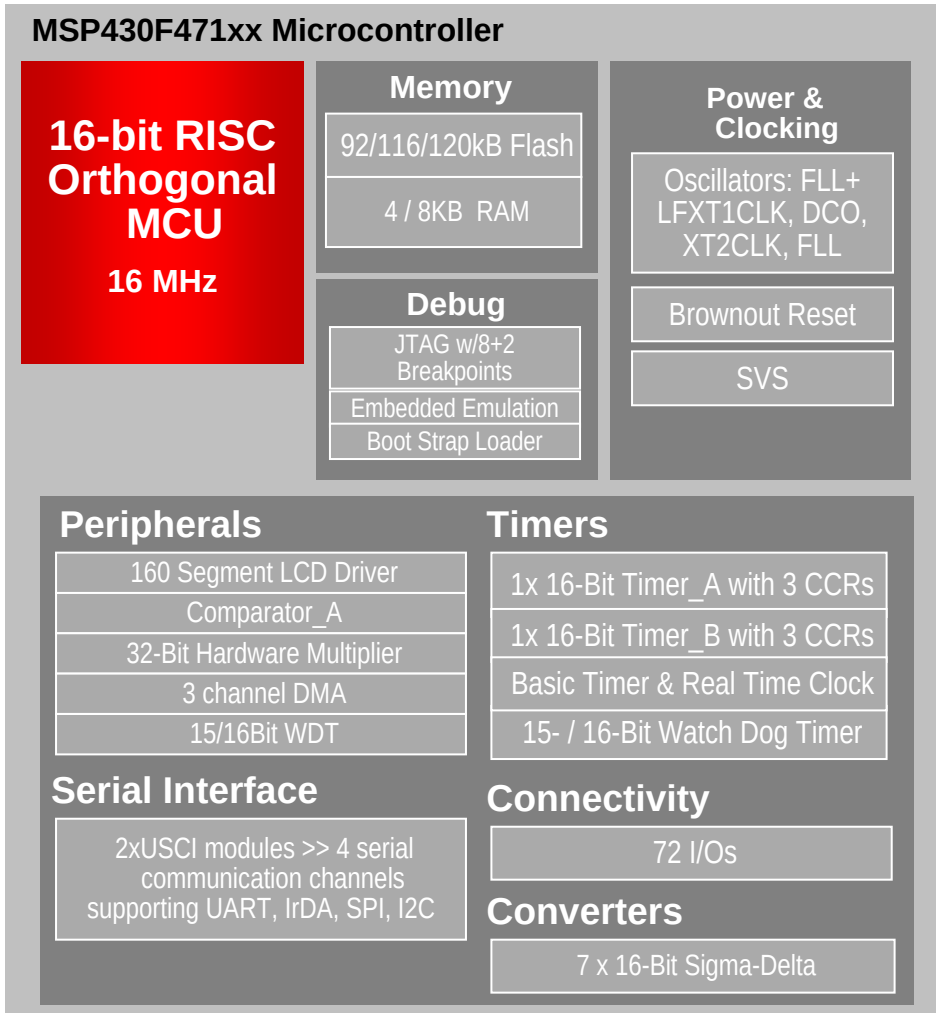

MSP430F41x2

8-MHz MCU w/ Integrated LCD Driver

Applications
- Portable battery-powered devices
- Counter applications, Weight scales
- Industrial/ Hand-held meters
- Intelligent sensor systems
- Stand-alone RF sensor front end

Performance
- 16-bit Orthogonal RISC Microcontroller with Integrated LCD Driver
- Ultra-Low-Power, Integrated Intelligent Peripherals and Easy-to-Use

Features
- **Power**
  - Low Supply Voltage Range 1.8 V to 3.6 V
  - Ultra-low Power Consumption
    - Active Mode: TBD µA / MHz, 2.2V
    - Standby Mode: TBD µA
    - Off Mode (RAM Retention): 0.1 µA
  - Ultra-fast Wake-Up from Standby Mode in Less Than 6 µs
- **Package**
  - 64-Pin (QFP): 12.2mm x 12.2mm
  - 48-Pin RGZ (QFN): 7.15mm x 7.15 mm

Benefits
- Five low power modes
- 8-ch ADC 10-bit with temperature sensing
- 144 LCD segment drive capability
- Backwards compatibility

Development Board and Programmer
- MSP-FET430U64A (target board and USB Prog I'face) $149
- Silicon Samples Available

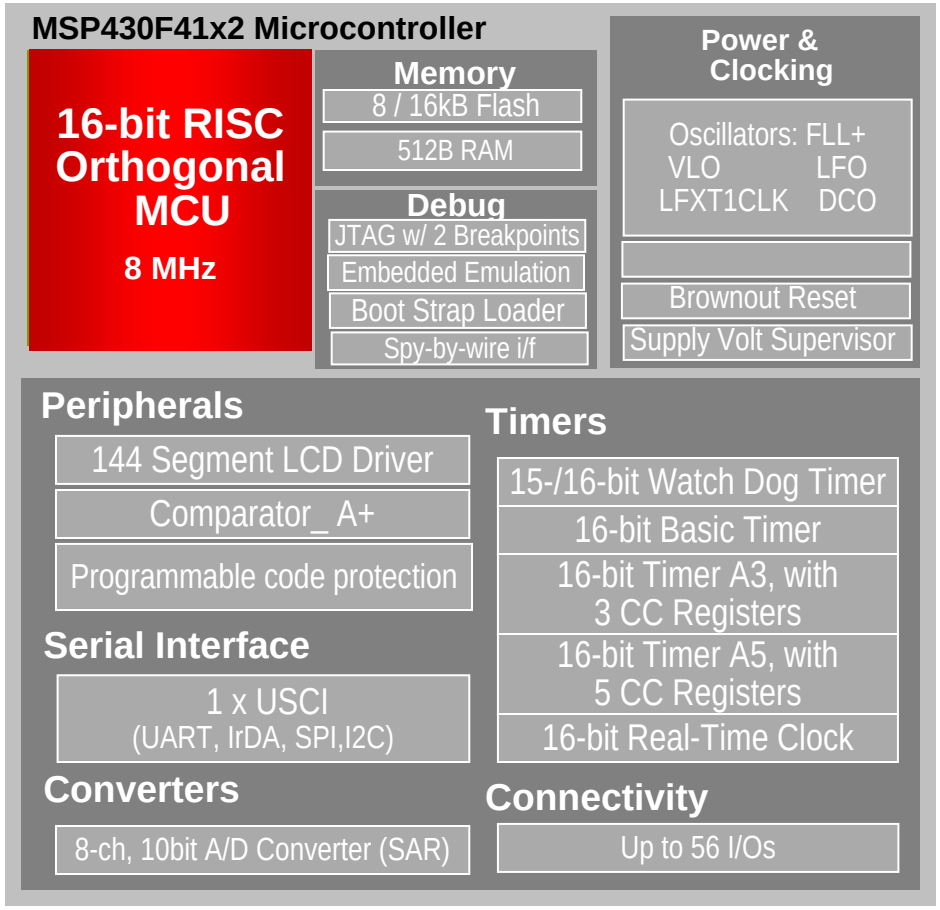

Product Folder
(Internet Required)

Texas Instruments

Agenda

- Overview of TI‘s µC portfolio
- MSP430 Roadmap & Generations
- Main features of the MSP430
- MSP430 in Industrial Applications
- MSP430 with USB on Chip
- MSP430 & E-Meter Applications
- 1st MSP430 with integrated SRD RF-Transceiver
- MSP430 Tools / Update
- MSP430 and FRAM

Product Portfolio

	Sub 1 GHz		2.4 GHz	
	Narrowband	Proprietary	ZigBee / IEEE802.15.4	Proprietary
Software		SimpliciTI	Z-Stack, TIMAC, SimpliciTI	SimpliciTI
Protocol Processor			CC2480	
System on Chip		CC430, CC1111, CC1110	CC2530, CC2431, CC2430	CC2511, CC2510
Transceiver	CC1020	CC1101, CC1100E	CC2520	CC2500
Transmitter	CC1070	CC1150		CC2550
RF Front End	CC1190		CC2591, CC2590	

LPRF Design

Block diagram of LPRF application example

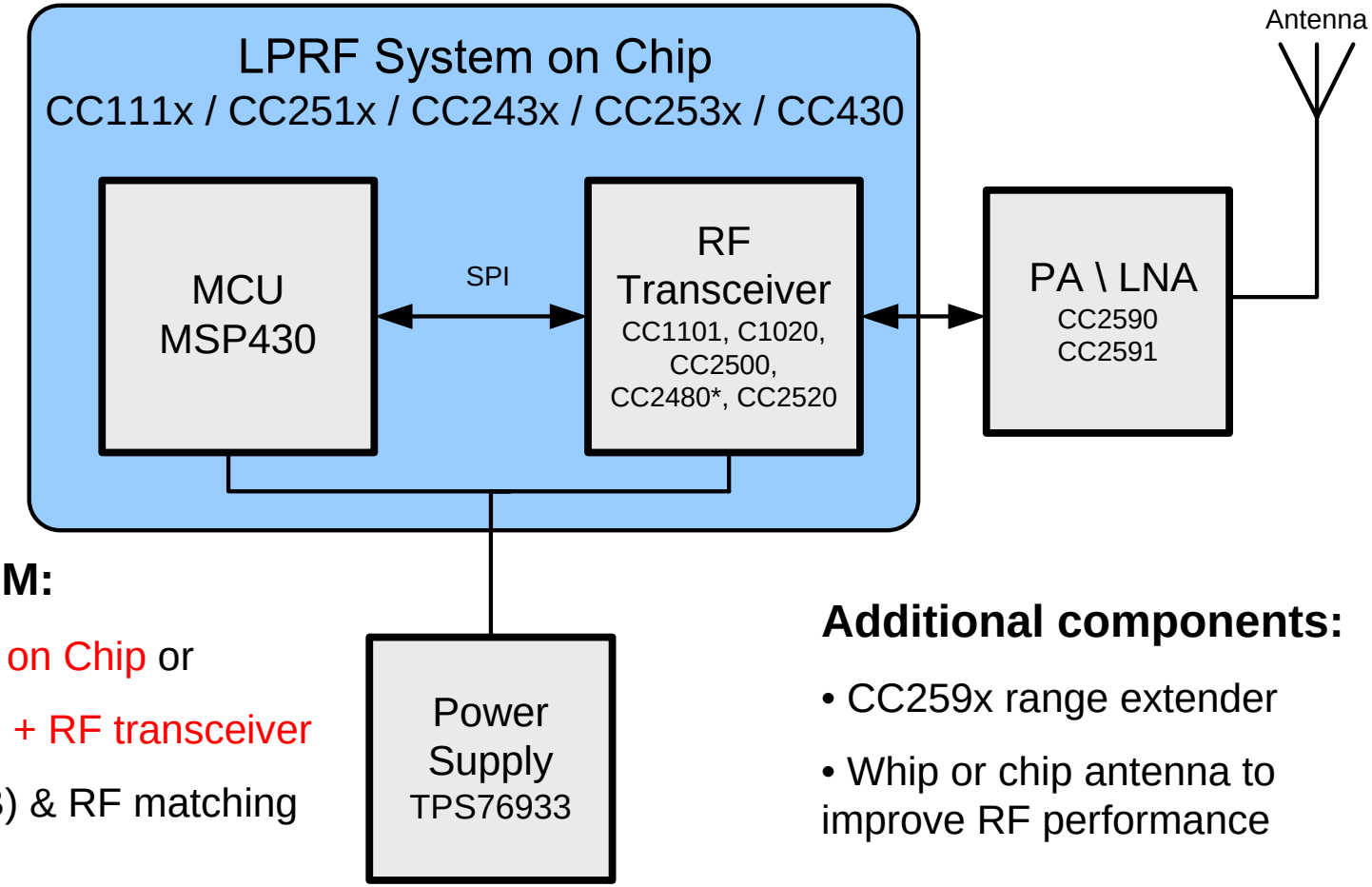

Minimum BOM:

- LPRF System on Chip or MSP430 MCU + RF transceiver
- Antenna (PCB) & RF matching components
- Battery or power supply

Additional components:

- CC259x range extender
- Whip or chip antenna to improve RF performance

*ZigBee network processor

Best of both worlds

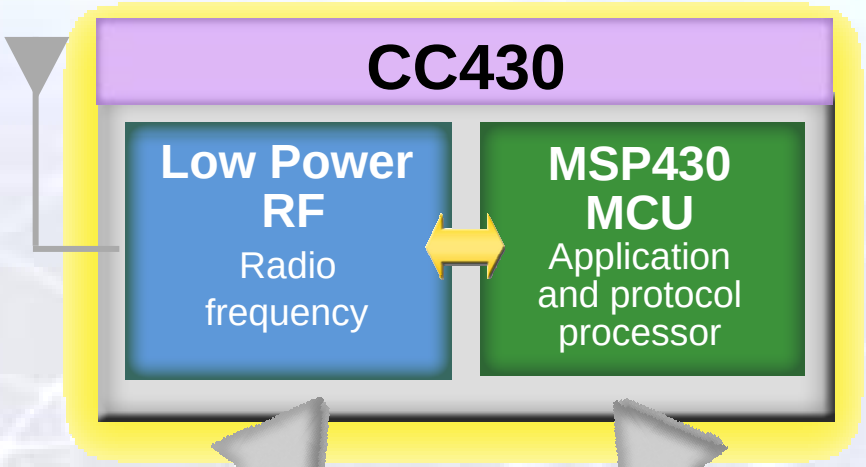

Lowest power RF SoC

Low Power RF Transceiver

- High sensitivity
- Low current consumption
- Excellent blocking performance
- Flexible data rate & modulation format
- Backwards compatible

MSP430 MCU

- Market's lowest power MCU
- High analog performance
- High level of integration
- Ease of development
- Sensor interface

TI Low-Power RF – EU Sub 1GHz

Alarm and Security

CC1110

Sub 1 GHz SoC
32KB Flash
0.3 uA sleep current

CC1101 / CC430

Sub 1 GHz Transceiver
+ MSP430 MCU,
500 Kbps
-112dBm sensitivity

Sub Metering - AMR

Low-Power RF

Smart Metering

CC1020

Narrowband
12.5 KHz channel spacing
-118dBm sensitivity

CC1101 / CC430

Sub 1 GHz Transceiver
+ MSP430 MCU,
500 Kbps
-112dBm sensitivity

CC1110

Sub 1 GHz SoC
32KB Flash
0.3 uA sleep current

Home Automation & Lighting

Sub 1 GHz

CC430F613x block diagram

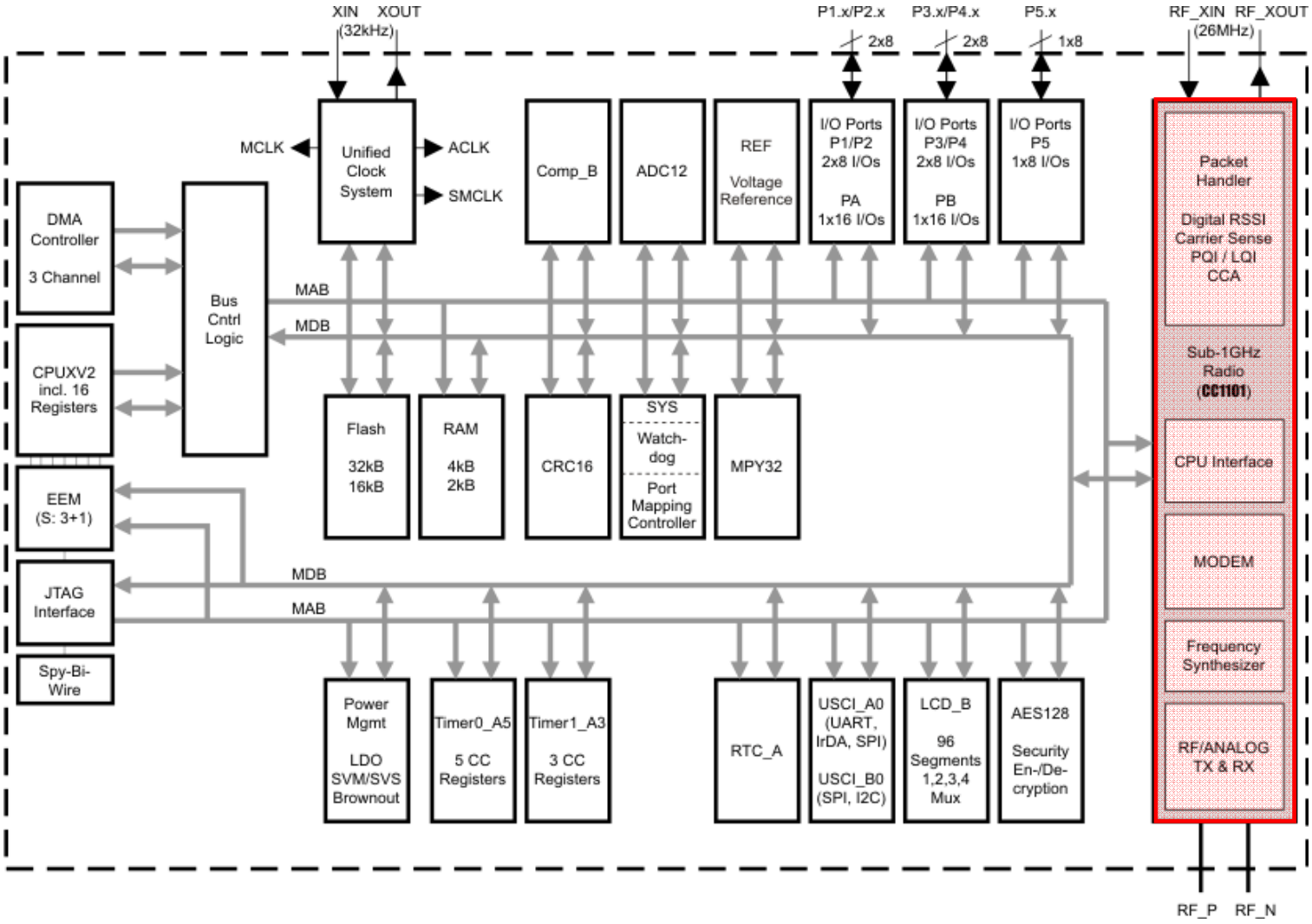

CC430 derivatives

With LCD module

- **CC430F6137**
  (LCD, ADC, Comparator B, 64-Pin)
  - 32KB+512B FLASH
  - 4KB RAM
- **CC430F6135**
  (LCD, ADC, Comparator B, 64-Pin)
  - 16KB+512B FLASH
  - 2KB RAM
- **CC430F6127**
  (LCD, Comparator B, 64-Pin)
  - 32KB+512B FLASH
  - 4KB RAM
- **CC430F6125**
  (LCD, Comparator B, 64-Pin)
  - 16KB+512B FLASH
  - 2KB RAM

Without LCD module

- **CC430F5137**
  (ADC, Comparator B, 48-Pin)
  - 32KB+512B FLASH
  - 4KB RAM
- **CC430F5135**
  (ADC, Comparator B, 48-Pin)
  - 16KB+512B FLASH
  - 2KB RAM
- **CC430F5133**
  (ADC, Comparator B, 48-Pin)
  - 8KB+512B FLASH
  - 2KB RAM

High Reliability Products

- **Dedicated High Reliability Team**

- **Custom Qualification**
  - Extended Temperature
  - Customer specified screening
  - One Lot Date Code
  - Burn In, ext HAST
  - Radiation
  - Custom Packaging
  - Industrial Environments

- **Parts Available (-55ºC to 125ºC)**
  - MSP430F2274-EP
  - MSP430F249-EP
  - MSP430F2618-EP
  - MSP430F5xx (Under Evaluation)

Selected Applications

- **Military**
- **Industrial**
- **Automotive**

Agenda

- Overview of TI‘s µC portfolio
- MSP430 Roadmap & Generations
- Main features of the MSP430
- MSP430 in Industrial Applications
- MSP430 with USB on Chip
- MSP430 & E-Meter Applications
- 1st MSP430 with integrated SRD RF-Transceiver
- MSP430 Tools / Update
- MSP430 and FRAM

Embedded Emulation

- Real-time, in-system debug
  - No application resources used
  - Full speed execution
  - H/W breakpoints
  - Single stepping
  - Complex triggering
  - Trace capability
- Powerful, easy to use tools
- Spy Bi-Wire
  - 2-wire debug interface
  - No pin function impact

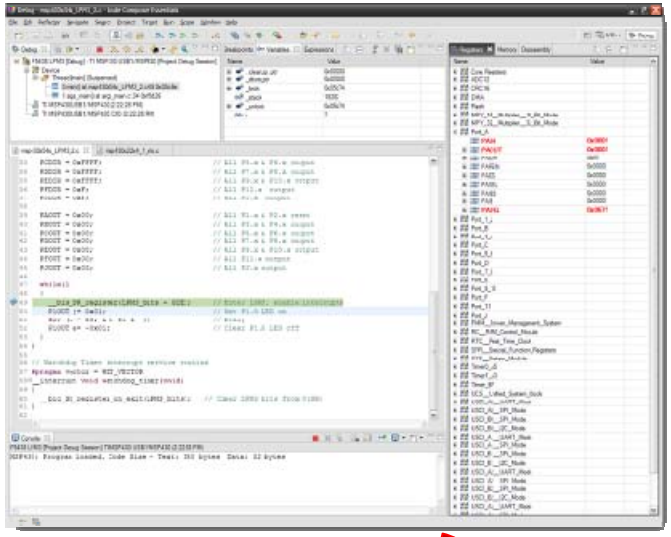

JTAG

Flash Emulation Tools

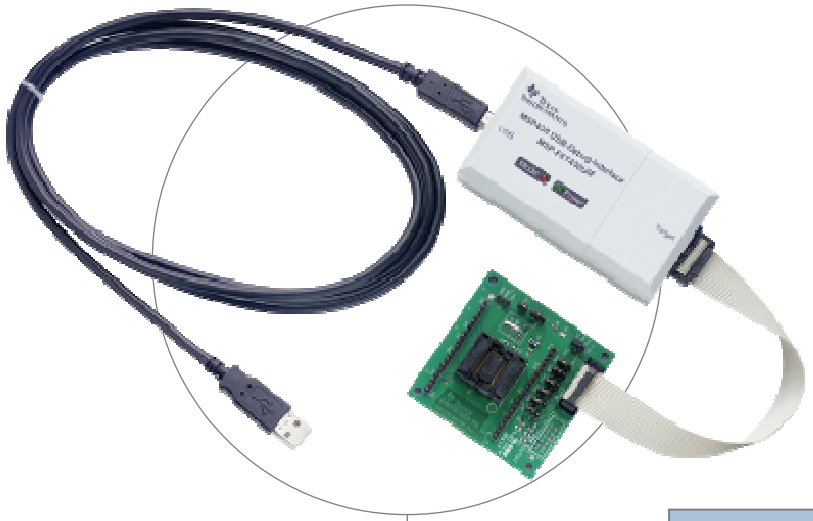

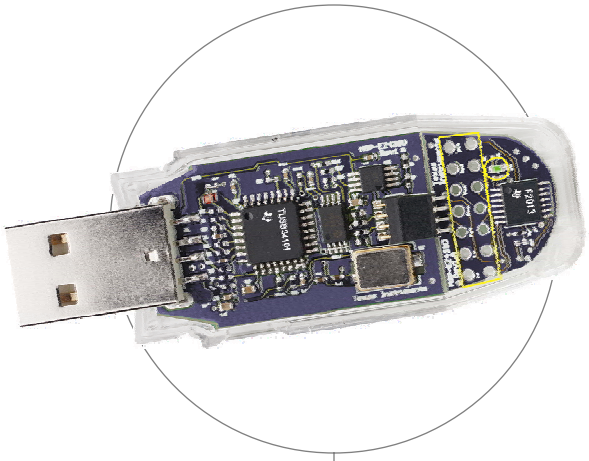

- Compatible with *all* devices
- Universal USB JTAG interface
- Package specific target boards
- Starting at $99 USD
- Free IDEs included

Chronos Development Platform

- Based on CC430F6137
- Available in 868MHz & 915MHz version
- Includes 3-axis accelerometer
- Includes PC-GUI for Demos
- Temperature and Battery voltage measurement on chip / board
- PC-USB dongle for RF communication included
- USB debug interface included
- Estimated availability End of November 2009 (49$)

Agenda

- Overview of TI‘s µC portfolio
- MSP430 Roadmap & Generations
- Main features of the MSP430
- MSP430 in Industrial Applications
- MSP430 with USB on Chip
- MSP430 & E-Meter Applications
- 1st MSP430 with integrated SRD RF-Transceiver
- MSP430 Tools / Update
- MSP430 and FRAM

The Search for a next generation Non-Volatile memory

- Why? Open the doors to…
  - Pushing technology forward; technological advancement
  - New applications, possibilities & efficiencies in our highly networked world

- What? Meet Emerging and Existing needs in embedded memory applications…
  - Universal memory – the ‘Nirvana’
  - Higher write endurance
  - Higher inherent security
  - Lower power
  - Faster access speeds
  - Increased scalability

FRAM (Ferroelectric Random Access Memory)

Non-Volatile Memory – the search is over!

- Fast Write / Update
  - ~ 50ns/byte or word – which is ~1000x faster than Flash/EEPROM
- Low Power
  - Needs 1.5V to write/erase compared to > 10-14V for Flash/EEPROM
- Data Reliability
  - No data-tearing and 100 Trillion write/read cycles

Ferroelectric Crystal

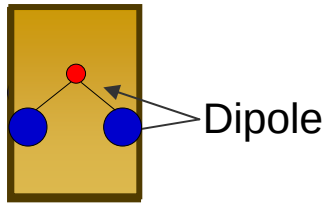

Positive Polarization

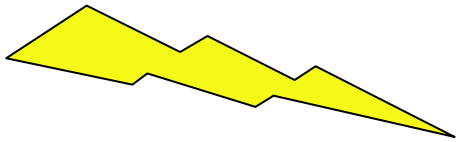

FRAM realizes the Universal Memory concept!

FRAM : Memory Access

Floating Gate

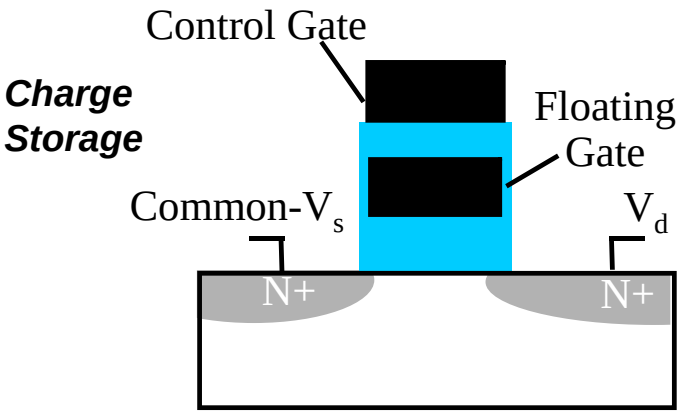

- Floating gate memories operate at high voltage (>10 V)
- Slow writes/erases, adds cost, consumes power
- MRAM and Phase Change Memory (not shown) have high-write currents

Ferroelectric RAM

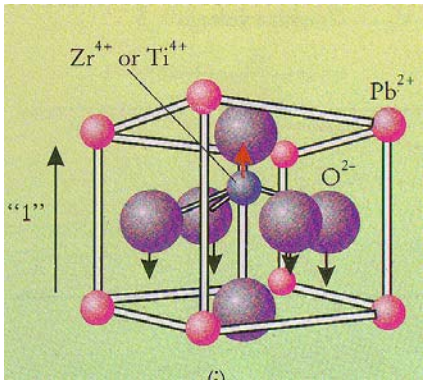

Crystal Polarization Change

- Low Power (1.5V operation)
- RAM operation (50ns w/r access) supported

FRAM Performance Comparison

	FRAM	EEPROM	Flash
Time to write 64 bytes to memory	1.6 µs	2,200 µs	6,400 µs
Time to read 64 bytes from memory	1.6 µs	4.5 µs	4.5 µs
Number of write cycles	100 trillion	500,000	100,000
Voltage needed to write	1.5 V	10 to 14 V	10 to 14 V
Manufacturing cycle time	–	>3×	3×
Resistance to gamma radiation	Yes	No	No

Products Enabled by Embedded FRAM

- **High Write Endurance (SRAM Replacement)**
  - Digital rights management (>10M write cycles)
  - Data logging, sensor applications
- **Low Power Electronics**
  - FRAM instead of SRAM to eliminate quiescent current
  - Increases battery life
  - Enables “energy harvesting” (i.e. with Low Power Wireless, RFID technologies)
- **Cost efficient Microcontroller SOCs**
  - Reduced masks / No charge pumps
  - Small die size (portable equipment control/security)
  - High volume potential

Thank You

Feedback?