TI Technology Days 2010

Industrial Interfaces

Joe Celania

WW Interface and Clocks Marketing Manger

Texas Instruments - Dallas, Texas

Industrial Interfaces

- Features and Benefits of various Industrial Networks
  - Field Busses
  - Sensor/Actuator Interfaces
- Digital Isolation

Why not one universal solution?

- **<u>Historical</u> – networks grew out of discrete wiring in various ways**
- **<u>Protective</u> – each automation vendor is Proud of his solution**
- **<u>Technical</u> – each network has strengths and weaknesses depending on the application**

Standardization?

In 2000, a set of interested parties created the IEC fieldbus standard, IEC 61158 with eight (8) different protocol sets called "Types" as follows:

Type 1 — FOUNDATION Fieldbus H1
Type 2 — ControlNet
Type 3 — PROFIBUS
Type 4 — P-Net
Type 5 — FOUNDATION Fieldbus HSE (High Speed Ethernet)
Type 6 — Interbus
Type 7 — SwiftNet (a protocol developed for Boeing, since withdrawn)
Type 8 — WorldFIP

This form of "standard“ concentrates less on commonality
Its primary purpose — elimination of restraint of trade between nations

After this *"8-headed monster"* was approved, the IEC standards work ceased and the committee was dissolved.

A new IEC committee SC65C/MT-9 was formed to resolve the conflicts

Recent additions or planned additions to IEC 61158 include but are not limited to:
Type 10 — PROFINET IO
Type 12 — EtherCAT

Automation Bus Choices

- 4-20 mA
  - Analog current loop
  - < 20 Hz bandwidth
- HART
  - Modulated 4-20 mA
  - 1200 bps
- Foundation H1
  - 31.25 kbps
- RS-232
- CompoNet
- CC-Link
- RS-485
- CAN
  - CAN-Open
  - DeviceNet
- Interbus
  - RS-485-based
- Modbus
  - RS-232-based
  - RS-485-based
- ProfiBus
  - RS-485-based
  - IEC 1158-2-based
  - Fiber-based
- ControlNet
- Ethernet
  - Ethernet/IP
  - ProfiNet
  - EtherCAT
  - Foundation HSE
  - Ethernet Powerlink
  - Modbus TCP
  - DriveCliq
  - Sercos III

Design Concerns

- **Interoperability**
  - Existing network installation
  - Available components
  - Future development
- **Speed**
  - Signaling rate
  - Data rate
- **Noise**
  - immunity
  - generation
- **Network length**
- **Number of nodes**
- **Power**
  - active dissipation
  - low-power modes
  - voltage supplies needed
- **Costs**
  - electronic components
  - processing burden
  - cable & connectors
- **Robustness**
  - Temperature
  - ESD protection
  - Isolation options
  - Fault detection

Measures of Bus Speed

Standard	Data Rate	Minimum message	Protocol latency
4-20 mA	**Limited by analog components, less than 30 Hz (typical)**	**none**	**None**
HART	**1.2 kbps**	**11 bits**	**> 9000 usec**
DeviceNet	**125 kbps, 250 kbps, 500 kbps**	**41 bits**	**> 81 usec**
ControlNet	**5 Mbps**	**56 bits**	**> 11 usec**
Profibus	**Up to 12 Mbps**	**140 bits**	**> 12 usec**
Ethernet 100BaseTX	**100 Mbps**	**300 bits**	**> 3 usec**
RS-485	**0 to 50 Mbps**	**1 bit**	**> .02 usec Depends on protocol**

Electrical Characteristics

Standard	Driver Output	Receiver Sensitivity	Signal Margin	Typical Cable Attenuation	Media-loss cable length limit (typical)	Protocol network length limit
RS-485	1.5 V	200 mV	17.5 dB	2.5 dB/100m @ 0.5 MHz	700 m@ < 0.5 Mbps	None
				10 dB/100m @ 10 MHz	175m @ 10 Mbps	
Interbus	Same as RS-485					200m per loop @ 0.5 Mbps
Profibus DP	2.1 V	200 mV	20.4 dB	6 dB/100m @ 12 MHz	340m @ 12 Mbps	100m @ 12 Mbps
						1200m @ <94 kbps
ControlNet (Coax)	8.2 Vpp	510 mVpp	24 dB	2 dB/100m @ 10 MHz	1200m @ 5 Mbps	< 1000m
DeviceNet	1.5 V	400 mV	11.5 dB	1.2 dB/100m @ 1 MHz	950m @ < 0.5 Mbps	500m @ 125 kbps
						250m @ 250 kbps
						100m @ 500 kbps
Ethernet 10Base-T	2.2 V	585 mV	11.5 dB	10 dB/100m @ 10 MHz	115m @ 10 Mbps	Typically 100m
Ethernet 100Base-TX	1.0 V	1 Vpp	6 dB	15 dB/100m @ 10 MHz	40m @ 100 Mbps	Typically 100m

Node Count for Standard Buses

Standard	Constraint mechanism on the number of nodes	Maximum allowable nodes
RS-485	**Total current loading on the active driver**	**32 Unit Loads[1] (up to 256 nodes)**
Profibus DP	**Total impedance per segment**	**32 devices per segment**
Interbus	**Point-to-point propagation delay**	**63 devices per loop**
ControlNet (Coax)	**Impedence and signal reflections**	**48 per segment**
DeviceNet	**Specified by the standard**	**64**
Ethernet	**Interconnection hierarchy**	**Star arrangement (typical) depends on protocol choice**

[1] The unit-load specified by the TIA/EIA-485-A standard (RS-485) specifies a hypothetical current-voltage loading unit as a basis of transceiver comparison. RS-485 transceivers are available with ratings of 1/8 unit load, allowing up to 8 x 32 or 256 transceivers on a single bus, without exceeding the standard.

Field Bus Summary

- **Different field busses offer different sets of features and performance**
- **It is difficult to make a general comparison for your needs**

Field bus	Bus power	Cabling redundancy	Max devices	Synchronisation	Sub millisecond cycle
AS-Interface	Yes	No	62	No	No
CANOpen	No	No	127	Yes	No
Control Net	No	Yes	99	No	No
CC-link	No	No	64	No	No
DeviceNet	Yes	No	64	No	No
EtherCAT	No	Yes	65536	Yes	Yes
Ethernet Powerlink	No	Optional	240	Yes	Yes
EtherNet/IP	No	Optional	Almost unlimited	Under development	No
Interbus	No	No	511	No	No
LonWorks	No	No	32000	No	No
Modbus	No	No	246	No	No
PROFIBUS DP	No	Yes	126	Yes	Yes
PROFIBUS PA	Yes	No	126	No	No
PROFINET IO	No	Optional	Almost unlimited	No	No
PROFINET IRT	No	Optional	Almost unlimited	Yes	Yes
SERCOS III	No	Yes	511	Yes	Yes
SERCOS interface	No	No	254	Yes	Yes
Field bus	Bus power	Cabling redundancy	Max devices	Synchronisation	Sub millisecond cycle

- **Which industrial networks does Texas Instruments support today?**

DeviceNet

- DeviceNet is based on the Common Industrial Protocol (CIP) upper-layer protocol
- Installed base: approximately 3.5 million nodes
- Physical media: twisted-pair for signal
  and twisted-pair for power (24V)
- Max. devices on a trunk: 64 nodes
- Data Rate: 500 kbps, 250 kbps or 125 kbps
- Max. distance: 500 meters at 125 kbps, depends on rate
- Communication method: peer-to-peer and master/slave option
- Data packet size: 0-8 bytes variable
- Supporting device: SN65HVD1050, ISO1050

Interbus

- Developer/support organization: Phoenix Contact and Interbus Club
- Installed base: 6.5 million nodes
- Physical media: twisted-pair, fiber
- Max devices: 512 with 254 on a remote bus line
- Max distance: 400 meters per segment; 12.8 km total via copper wire, 80 km via fiber-optic
- Communication method: master/slave with total frame transfer
- Transmission speed: 500 kbps at full duplex
- Data packet size: 1-64 bytes data, 246 bytes parameter, 512 bytes HS
- Cycle time: 1.8–7.4 msec
- Supporting devices:
  e.g. SN65LBC179, SN65HVD179 or SN65HVD379

Profibus

- Versions: Profibus-PA, Profibus-DP, Profinet, ProfiSafe
- Developer/originator: Siemens AG
- Installed base: more than 30 million nodes
- Physical media: twisted-pair or fiber
- Max devices: 127 nodes in four segments
- Max distance: 100 meters between segments at 12 Mbps, or 12 km with fiber
- Communication method: master/slave, peer-to-peer
- Transmission properties: 500 kbps, 1.5 or 12 Mbps for Profibus DP; 31.25 kbps for Profibus PA
- Data packet size: 256 bytes
- Supporting device: SN65HVD1176 + ISO7xxx or ISO1176

Other networks we support:

- **RS-485 networks**
  - **EnDAT (Encoders)**
  - **BACnet (Building automation)**
  - **CC-link**
- **CAN bus networks**
  - **CANopen**
  - **CAN Kingdom**
- **USB, RS-232, etc.**
- **ControlNet**
- **ModBus**

RS-485 (EIA-485 or TIA/EIA-485)

Most versatile communication standard

1) Connects data terminal equipment (DTE) directly without the need of modems
2) Can connect several DTE's in a network structure
3) Ability to communicate over longer distances (up to 1200m)
4) Ability to communicate at faster communication rates (up to 50Mbps)

Multipoint communication

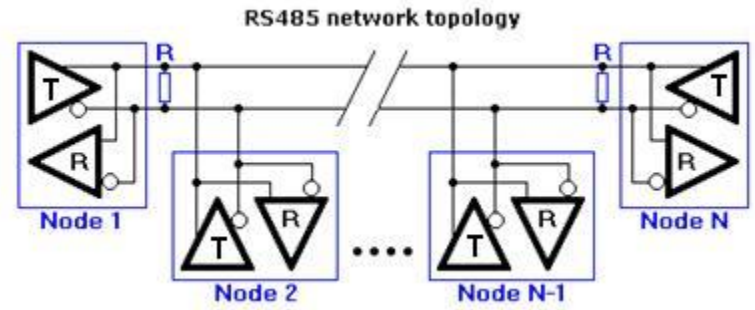

RS-485 Features

Parameter	RS-485
Maximum common-mode voltage	-7V to 12V
Receiver input resistance	12kΩ min
Receiver sensitivity	±200mV
Driver load	60Ω
Driver output short-circuit limit	250mA

Differential signaling and Twisted pair allow better noise immunity

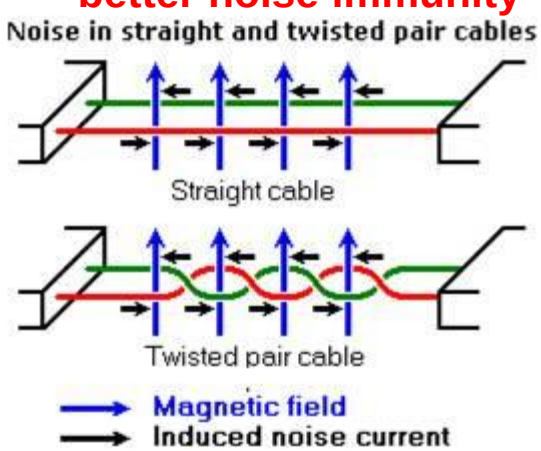

Why TI RS-485?

Wide selection of offerings
Fault protection features
Industry expertise in RS-422/RS-485
Combination with isolation
Complete board solution

Controller Area Network (CAN)

Highly robust serial communication standard

- Allows microcontrollers and devices to communicate with each other within a vehicle without a host computer.
- Excellent prioritization and arbitration capabilities
- Used in automotive, industrial, medical applications

CAN bus logic state voltage definitions

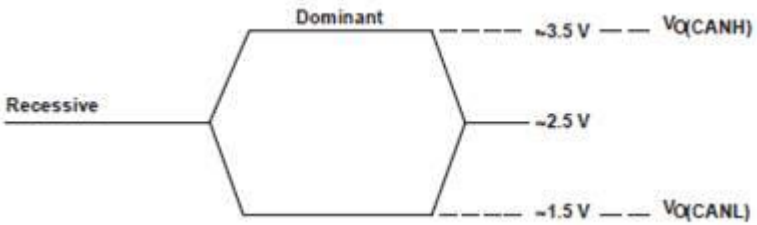

CAN Features

Parameter	CAN
Signaling	<1Mbps
Distance	<400m
Nodes	30
Maximum common-mode voltage	-2V to 7V
Cable Characteristic impedance	120Ω

CAN in automotive application

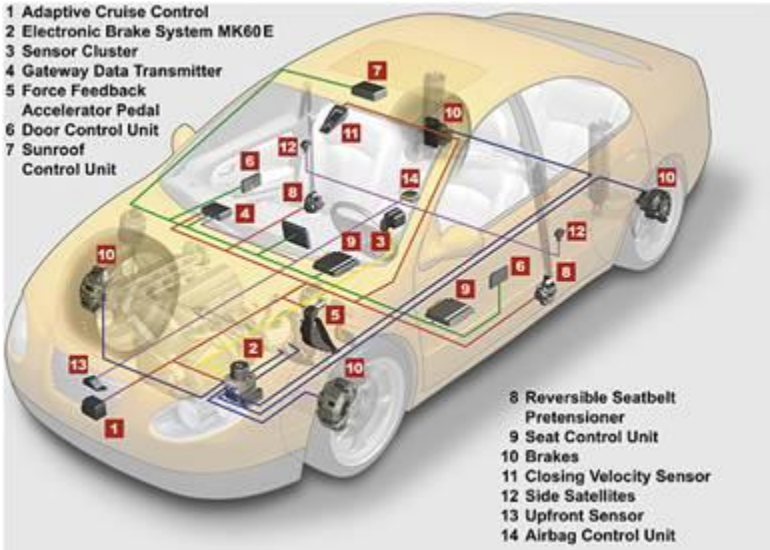

Why TI CAN?

Wide selection of offerings
Synergy with automotive developments
Synergy with Luminary CAN controllers
Combination with isolation
Complete board solution

SN65HVD96

SymPol Transceiver with Cross-wire Immunity

Features

- Immune to crossed bus wires
- Same pin-out as RS-485
- Up to 5 Mbps signaling
- High input impedance for up 32 nodes
- Receiver hysteresis, 150 mV typical
- High ESD protection level
- Driver output current limiting
- Receiver output is 3.3V uC friendly

Benefits

- Eliminate debug and re-wiring due to installation
- No board redesign
- Covers many application needs
- Allows many nodes on a single network
- Best noise immunity
- Survives ESD transients on bus pins
- Survives faults and ground offsets
- No level-translator or overdrive worries

Applications

Wherever third-party installers make connections

- HVAC equipment
- Building automation
- Security electronics

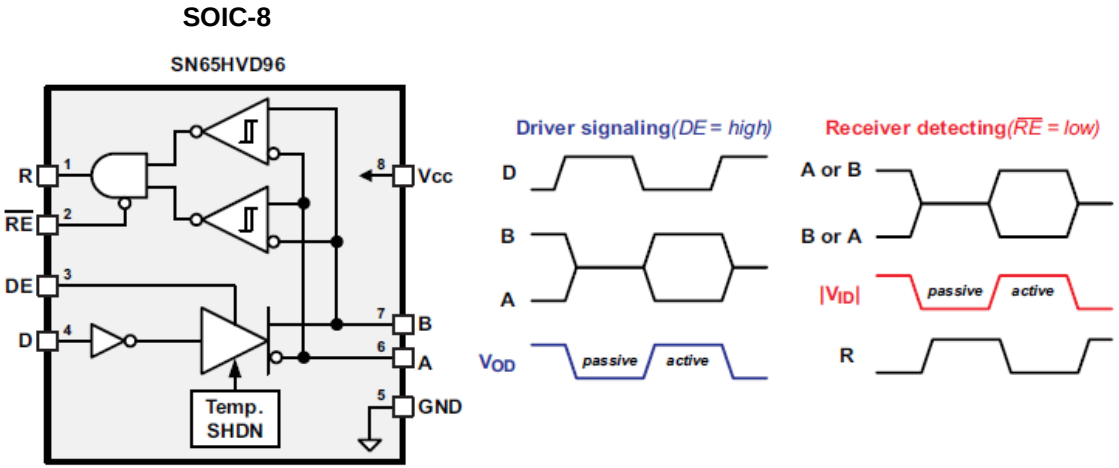

Industrial Ethernet

What's different to TCP/IP-Ethernet?

- **Temperature range: -40..85 (125)^{O}C**
- **Low power-consumption/-dissipation**
- **Timing requirements:**
  - **Low Latency**
  - **Deterministic Latency**

Most common "flavors":

- **ProfiNet**
- **EtherCAT**
- **SercosIII**
- **EthernetPowerlink**
- **Ethernet/IP**

Supporting devices: TLK100

ProfiNet

- **ProfiNet is the Ethernet extension to ProfiBus and Interbus**
- **Interoperability with Profibus is key**

EtherCAT – another industrial Ethernet

- **Claims:**
  - **fastest cycle times (data update times)**
  - **Flexibility**
  - **Lower cost**

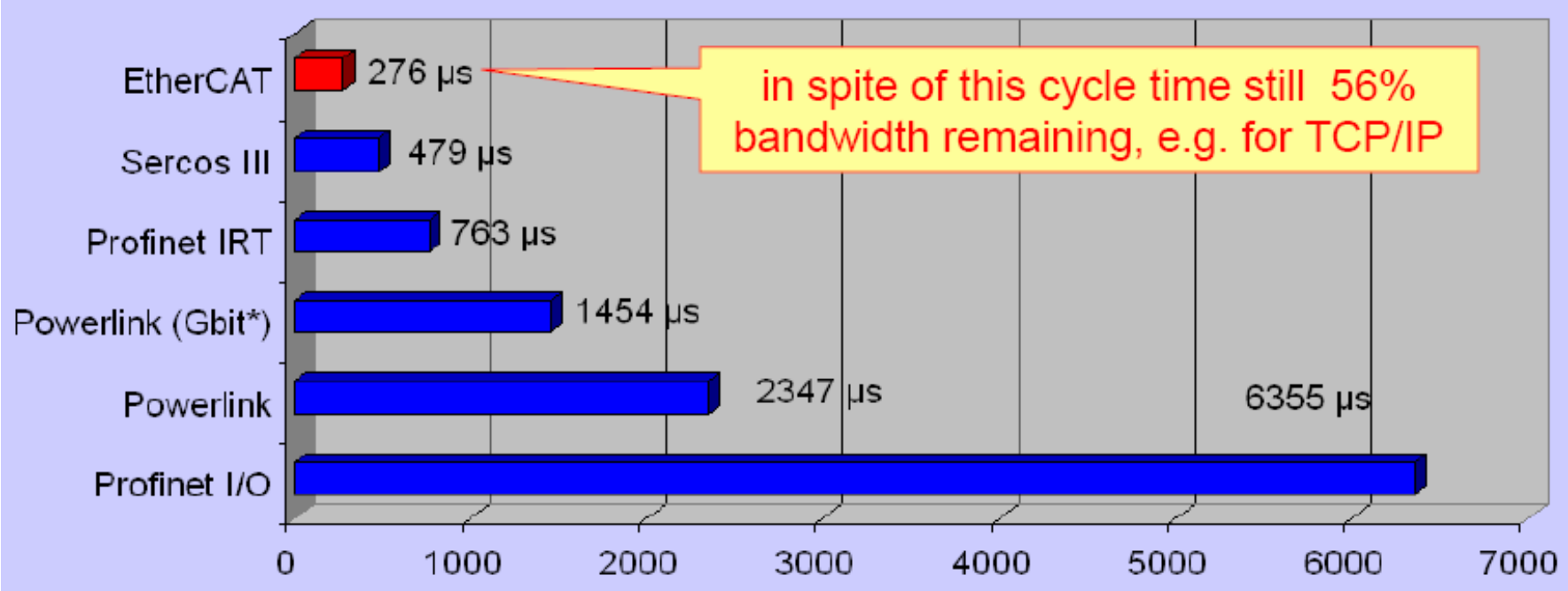

SERCOS

- SERCOS is a digital motion control bus that interconnects motion controls, drives, I/Os, sensors and actuators
- Designed for high-speed serial communication of data over a noise-immune, fiber optic ring (SERCOS I & II) or Industrial Ethernet cable (SERCOS III).
- It can connect up to 254 drives to a control using one fiber optic cable ring or a single daisy-chained Industrial Ethernet cable.

TLK110 Industrial Ethernet 10/100 PHY

Samples 1Q11

Features

- Best-in-class Deterministic Channel Latency
- Extended cable reach to 137 m
- IEEE802.3 Compliance
- Drop-in upgrade to National DP83848
- Industry-standard MII or RMII to MAC
- Cable Diagnostics
- IEEE 1149.1 JTAG
- -40 to 125C Ambient temperature range
- Link loss detection time < 15us
- 48-pin TQFP Package

Benefits

- Predictable and precise for time-critical apps
- Reliable operation over long cables
- Communicate with all 10/100 TX Ethernet
- Easy design-in to available MACs
- Robust and reliable
- Enhances user-experience
- Ease debug at Production
- Robust for all Industrial Applications
- EtherCAT and SERCOSIII friendly

-40 to 125C

- Compatible with 50+ TI Processers with 10/100 MAC
  - OMAP-L137 / 138
  - OMAP-L118 / 108
  - TMS370C64xx / C67xx
  - TMS320C5XX

Applications

- Factory automation
- Motion Control
- Industrial Networks
- Power electronics

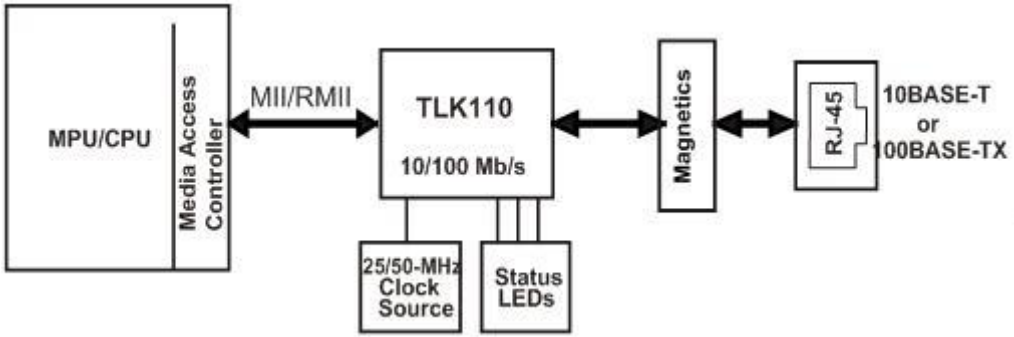

EVM

TLK110EVM

Sensor/Actuator Interfaces

- **4..20mA / 0..20mA**
- **0..10V / -10..10V**
- **HART**
- **AS-i**
- **IO-link**

TI solutions for 4-20mA

- XTR1xx family of transmitters
- RCV420 precision receiver
- XTR300 universal 4..20mA/+/-10V IF

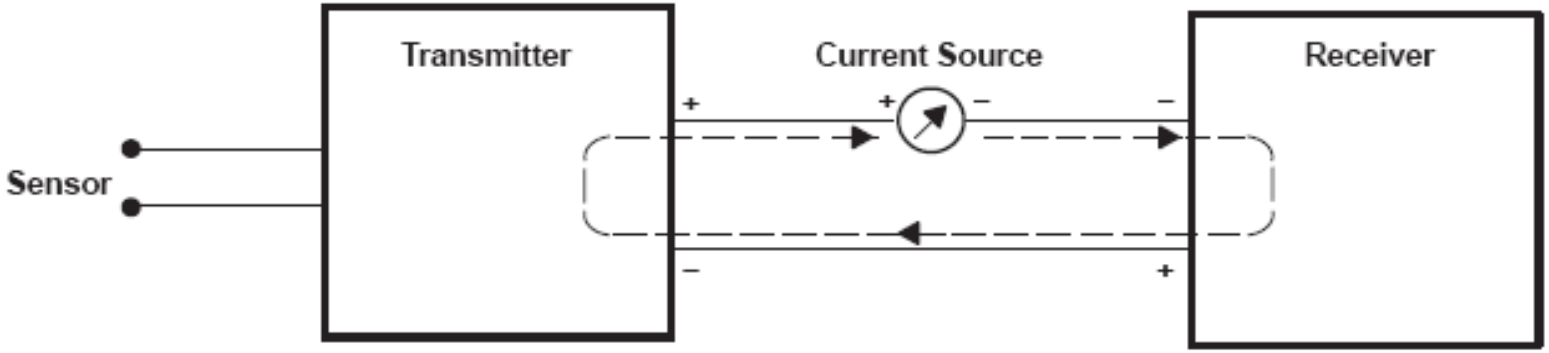

Figure 1. Example of a Current Loop

HART
(Highway-Addressable Remote Transducer)

- **Developer/support organization: HART Communication Foundation (HCF)**
- **Installed base: more than 14 million HART-enabled devices**
- **Physical media: same as 4-20 mA wiring, no terminators needed**
- **Max devices: point-to-point recommended, but can multi-drop up to 15 devices for some applications**
- **Max distance: 3,000 meters, but can use repeaters**
- **Communication method: analog 4-20 mA, plus two-way digital master/slave**
- **Transmission speed: analog 4-20 mA, which is instantaneous, always present, with no transport lags or synchronization time**
- **Cycle time: 500 msec for digital**

HART technology

- **Digital modulated onto analog (FM on 4-20mA)**

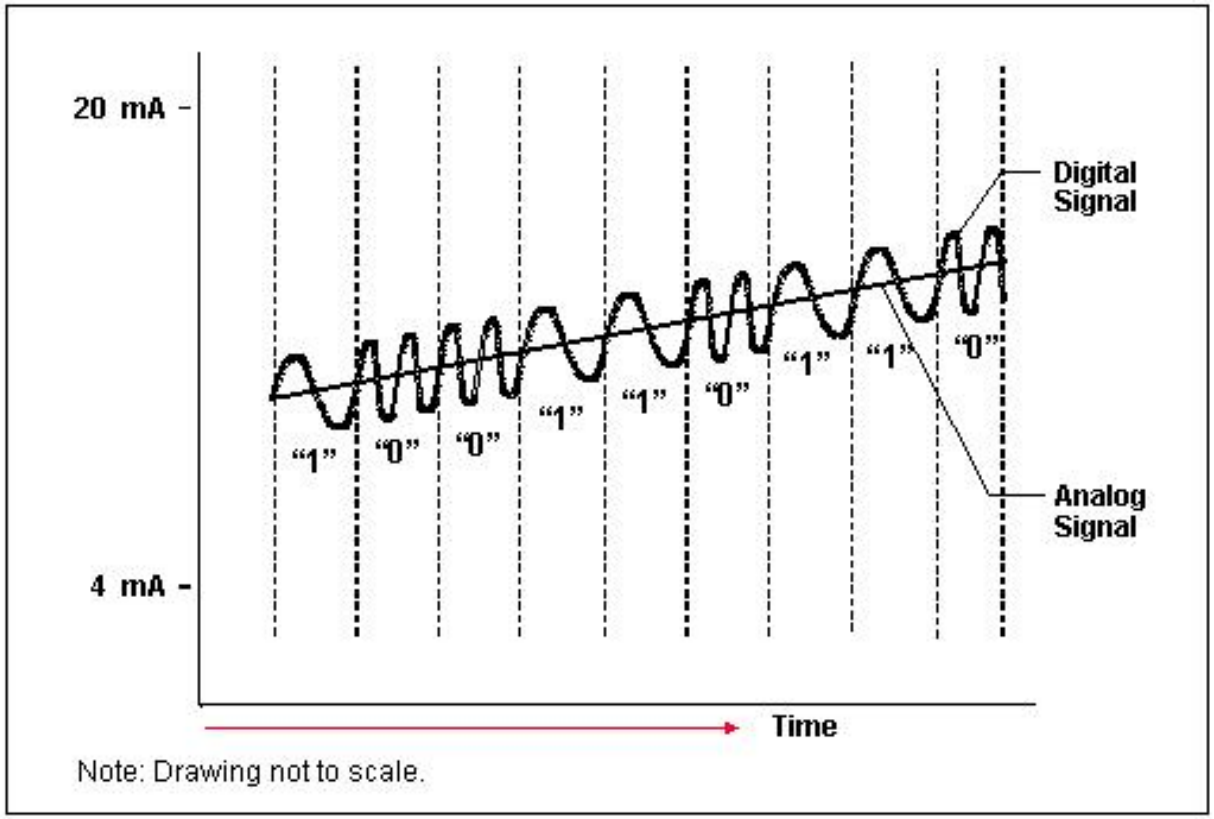

Actuator Sensor-Interface (AS-i)

- **Developer/support organization: AS-i International**
- **Installed base: 5 million nodes**
- **Physical medium: Two-wire cable**
- **Max devices: 31 slaves**
- **Max distance: 100 meters, 300 m with repeaters**
- **Communication method: master/slave with cyclic polling**
- **Transmission speed: always on, same as analog 4-20 mA**
- **Data packet size: 4 bits**
- **Cycle time: 5 msec**

IO-Link

integrated diagnostics / automated parameter setting / simplified installation

Machine tool – Costs reduced, operating convenience increased

Assembly line – Installation drastically simplified

Intralogistics – Greatest flexibility for overhead conveyors

Pharmaceutical packaging – Process validation down to the lowest automation level

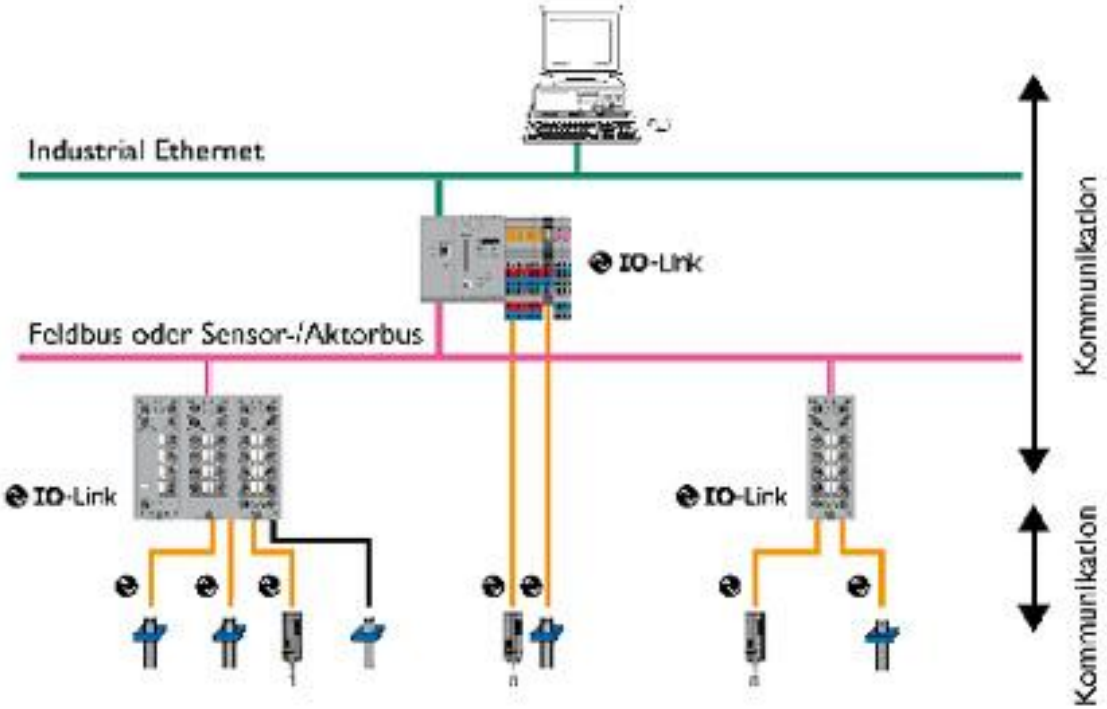

IO-Link

- What is IO-Link?
  - Traditionally, Sensors and actuators have so far been connected to control devices via either digital (24 V) or analog (4…20 mA, +/-10 V) signals.
  - Programmability, Calibration, etc. in the field requires a bidirectional communication: IO-link

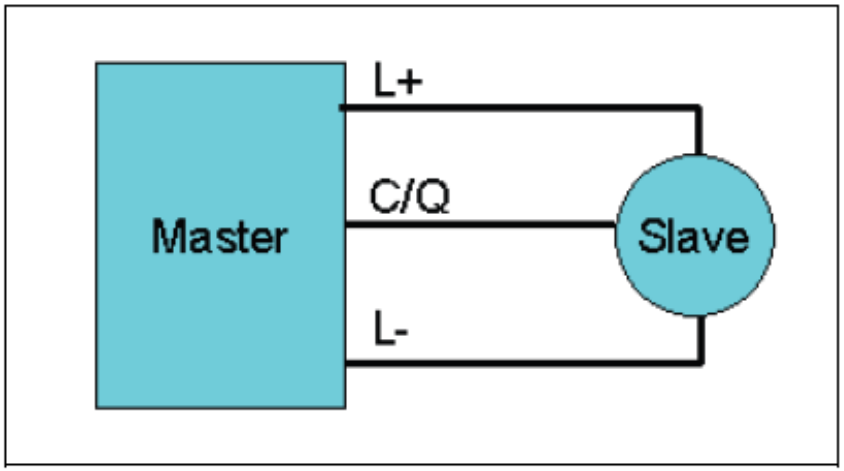

- Key advantages of IO-Link
  - All on one cable:
    process/parameter/diagnostic data on a single cable
  - Backwards compatible and flexible:
    Combine IO-Link and non IO-Link together
  - Low cost deployment: Low cost un-shielded cables
  - Easy fieldbus integration: Fieldbus neutral protocol

INDUSTRIAL I/O

An important function in industrial applications is the detection of high voltage using low-voltage controllers.

High Voltage DC switches such as:

- **DC Proximity switches *(Inductive, capacitive, ultrasonic, photoelectric)***
- **Reed-relay switches**
- **Limit switches**
- **Push button switches**
- **Float switches**
- **Selector switches**
- **Mercury switches**
- **Hall effect switches**

Why Digital Input Serializers?

The SN65HVS88x family of digital input serializers from Texas Instruments accomplishes this by providing application specific features:

• 8 digital, 34 Vdc inputs……	*for sensing high voltages*
• Input configurable via series resistor……..	*for shifting On-thresholds and sensing voltages up to 340 Vdc*
• Adjustable current limits: 0.2 mA - 5 mA……	*for drastic power reduction*
• Programmable debounce times: 0,1,3 ms…..	*for high noise-immunity*
• 8 LED outputs……	*to indicate input status*
• Simple Serial Interface……	*for simple data read-out and daisy-chaining multiple devices*
• Temperature sensor……..	*for Temperature protection*
• Supply voltage monitor……	*for low-supply warning*
• 5V linear regulated output ……..	*for supplying µCs and isolators*

SN65HVS88x - Main Advantage

Multi-channel signal conditioning

1) System specific diagnostics
2) Highly-efficient power reduction
3) Low heat dissipation
4) Drastic reduction in board space 60%
5) Shortening time-to-market

Why TI Industrial I/O?

Highly-integrated
Application specific features
Robust wrt EMC standards
Complete board solution

8-Channel Module

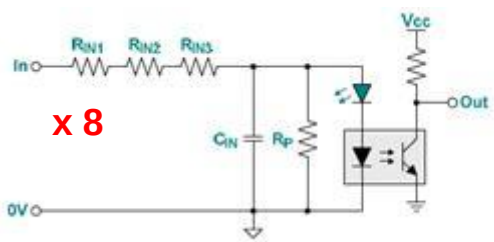

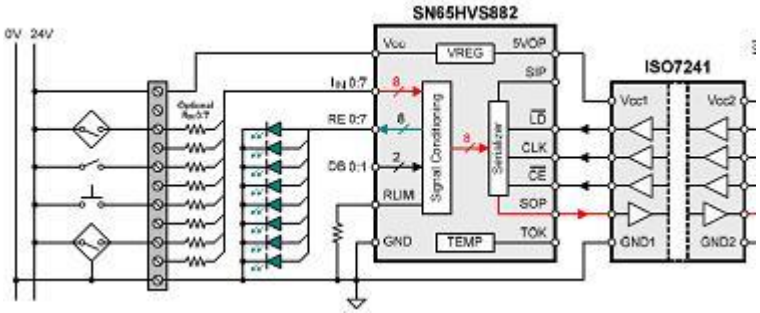

32-Channel Module

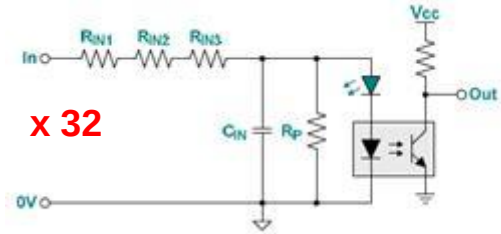

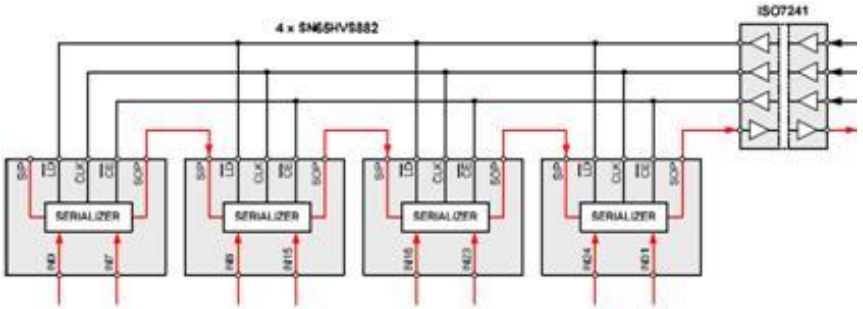

Traditional approach

Industrial I/O approach

HVS88x Family

	SN65HVS880	SN65HVS881	SN65HVS882	SN65HVS885
Operating VCC Voltage(V)	18V - 30V	10V – 34V	10V – 34V	4.5V - 5.5V
I/O Vol	0-30	0-34		
Interface	SPI			
No. of Inputs	8			
I/O max rate(kbps)	1000			
Debounce times(MS)	0,1,3			
IO Current (mA)	0.2-5.2			
Low Voltage Monitor	Yes	No		
Parity	No	Yes	No	No
Over temperature	Yes			
Pin/Package	28HTSSOP			
Operating Temp Range(C)	-40 to 85	-40 to 125		
Price	$2.75	$3.10	$3.00	$2.70
	PLC Voltage range	Parity Bit - Error Check	General purpose	Applications with 5V VCC

Capacitive Isolation

Applications utilizing Isolation

Industrial:

- **Robotics**
- **PLC input/output isolation**
- **Industrial networks**
- **Motor control**
- **Power supplies**

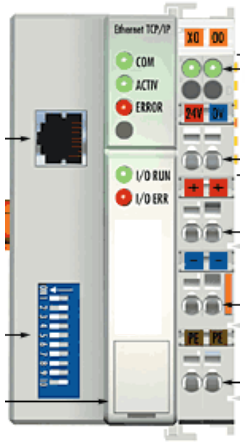

Primary Task:
Isolation between High-Power and Control Signals
Isolation of Bus-Nodes to prevent Corruption
of the complete Bus & Common Mode Rejection

Applications utilizing Isolation

Medical:

- Microwave therapy
- Patient monitoring
- Electrocardiographs
- Defibrillators

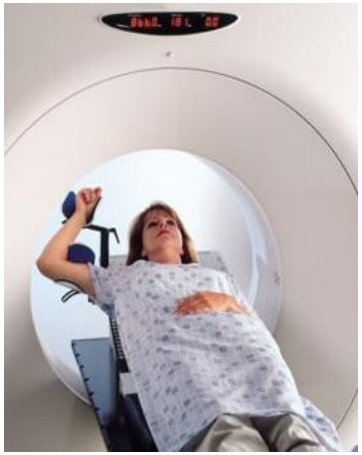

Communications:

- PBX (Private Branch Exchange) and central office
- Telephone terminal equipment
- Telephone switching equipment
- Modems
- ISDN
- Ethernet / PoE

Primary Task:
Medical:
Isolation between Power and Patient
Communications:
Isolation between Power and Caller
Isolation of Bus-Nodes to prevent Corruption of the complete Bus

ISOLATION

Galvanic isolation

The ability to exchange signals between two circuits without allowing the flow of current

Benefits of isolation in electrical systems

Break ground loops
Reduce common mode noise
Safety from high voltages

w/o isolation

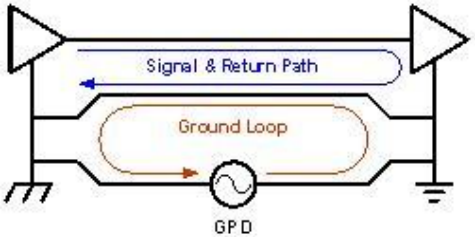

with isolation

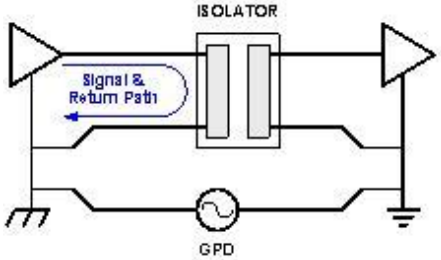

GPD: Ground potential difference

Why TI Isolation?

Most stable dielectric over temp, moisture
Highest lifetime in the industry
Highest magnetic immunity
Breadth of stand-alone and integrated ISO
Complete board solution

TI SiO_2 capacitive isolation

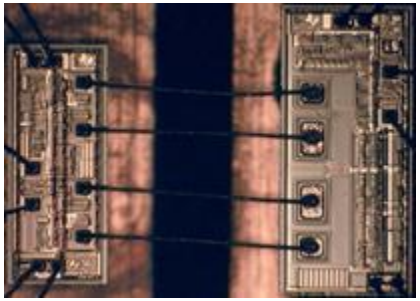

Isolation terminology

1. Working or Operating Voltage: Continuous voltage across isolation (560Vpk or 890Vpk)
2. Isolation or Transient Voltage (Vrms): Transient voltage across isolation (4kVpk or 6kVpk)
3. Basic Isolation: 560Vpk continuous, 4kVpk transient voltage
4. Reinforced Isolation: 890Vpk continuous, 6kVpk transient,10kV surge voltage
Medical needs 5kVrms transient
5. Common Mode Transient Immunity (CMTI): $d(V_1-V_2)/dt$ without false toggling of the o/p
6. Creepage and Clearance: surface-distance across isolation that may conduct if wet or polluted

How do they work?

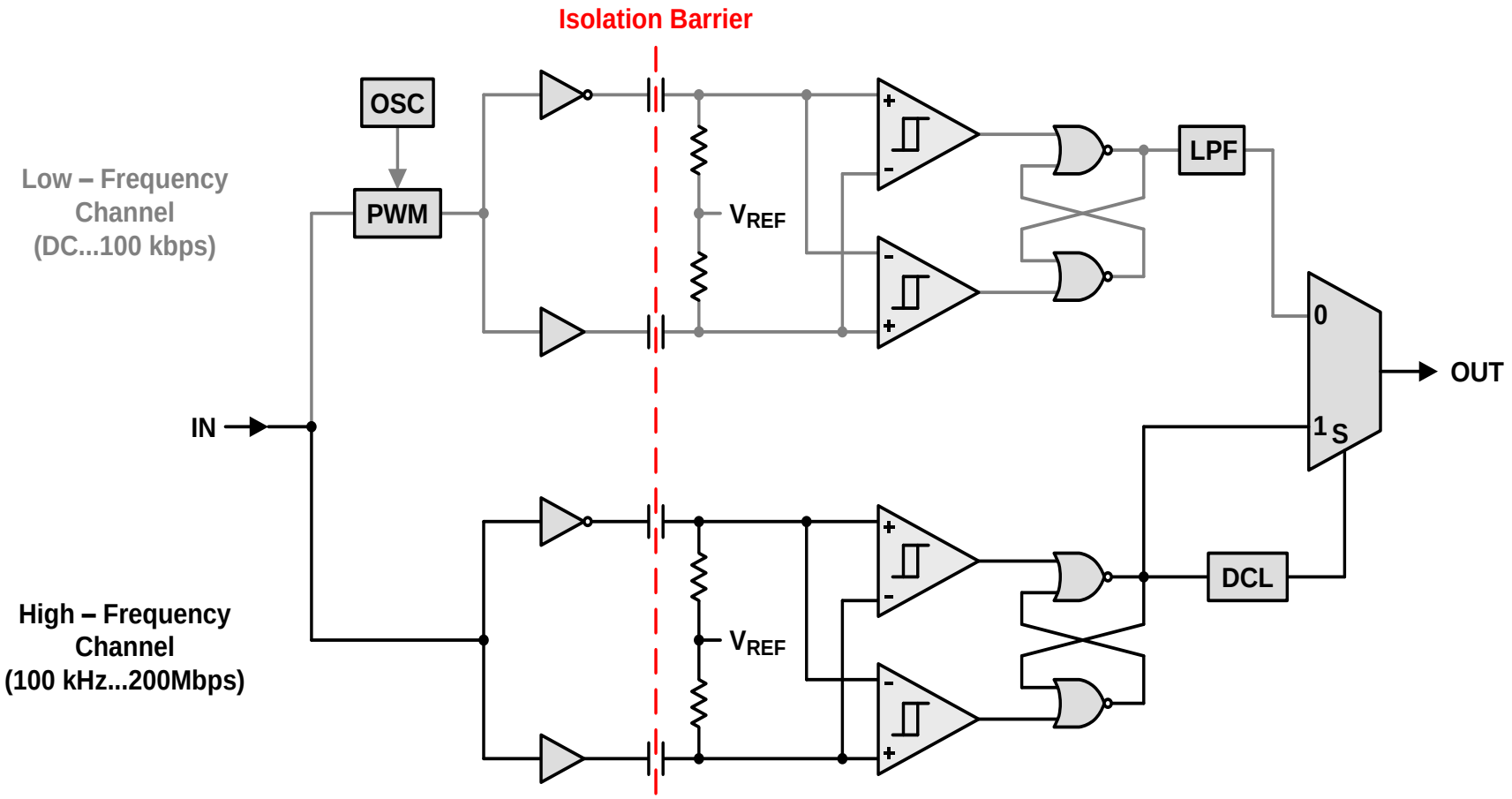

- The LF channel assures correct output signal polarity during loss of input signal (i.e. wire-break)
- HF and LF channels use differential signaling for high noise immunity

Other isolation technologies lack these features

High-Frequency Channel

for a 50:50 duty cycle

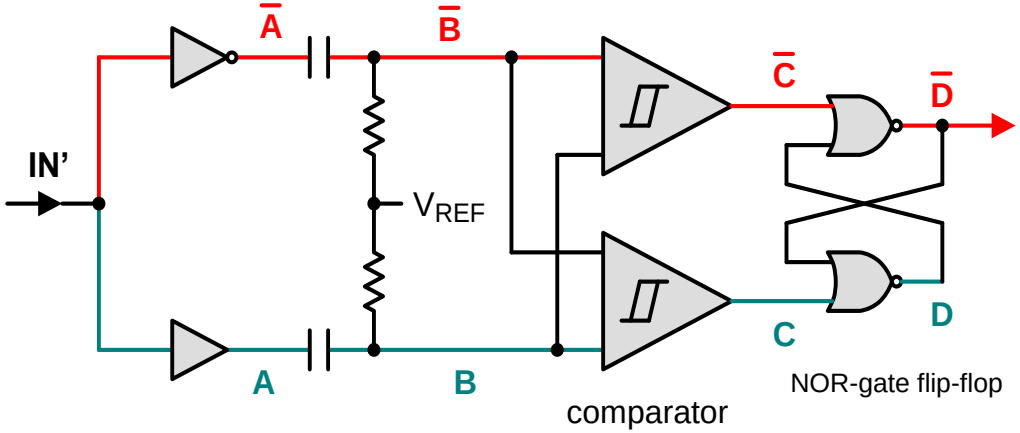

C	$\overline{C}$	D	$\overline{D}$
L	L	S	S
L	H	H	L
H	L	L	H
H	H	L	L

S = store previous condition

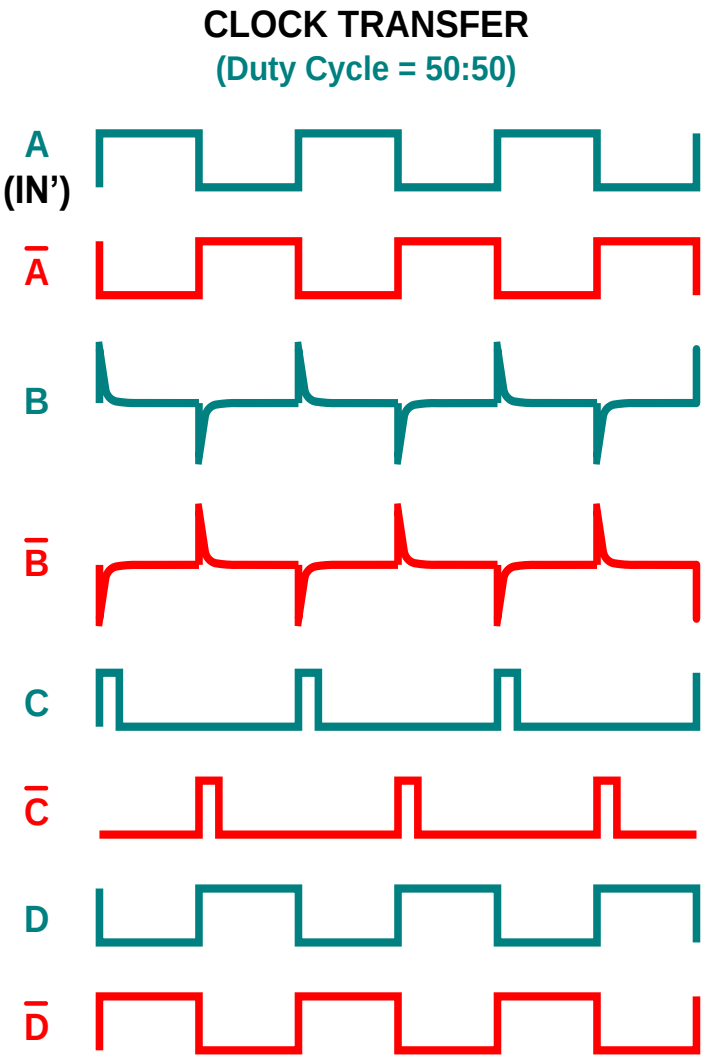

Low-Frequency Channel

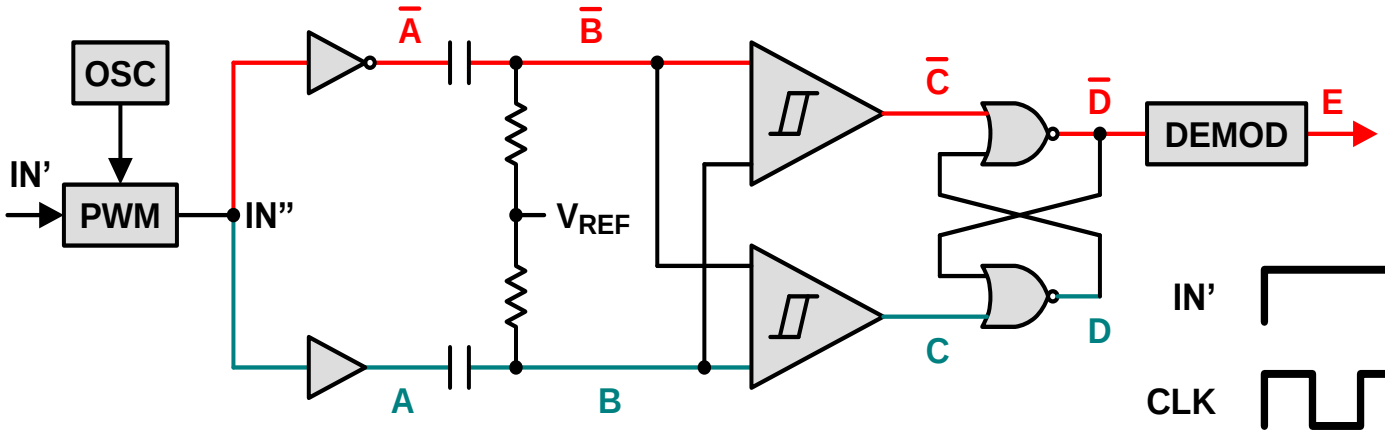

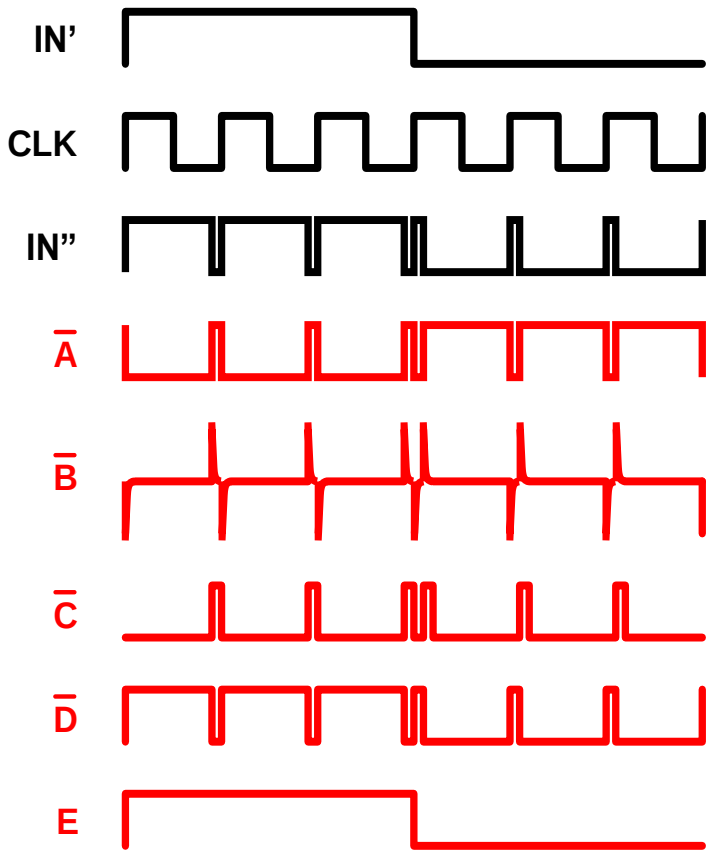

Between A and D, the LF-channel works in the same way the HF channel does.

The only differences are the pulse-width modulation at the beginning and the demodulation at the end.

How are they constructed?

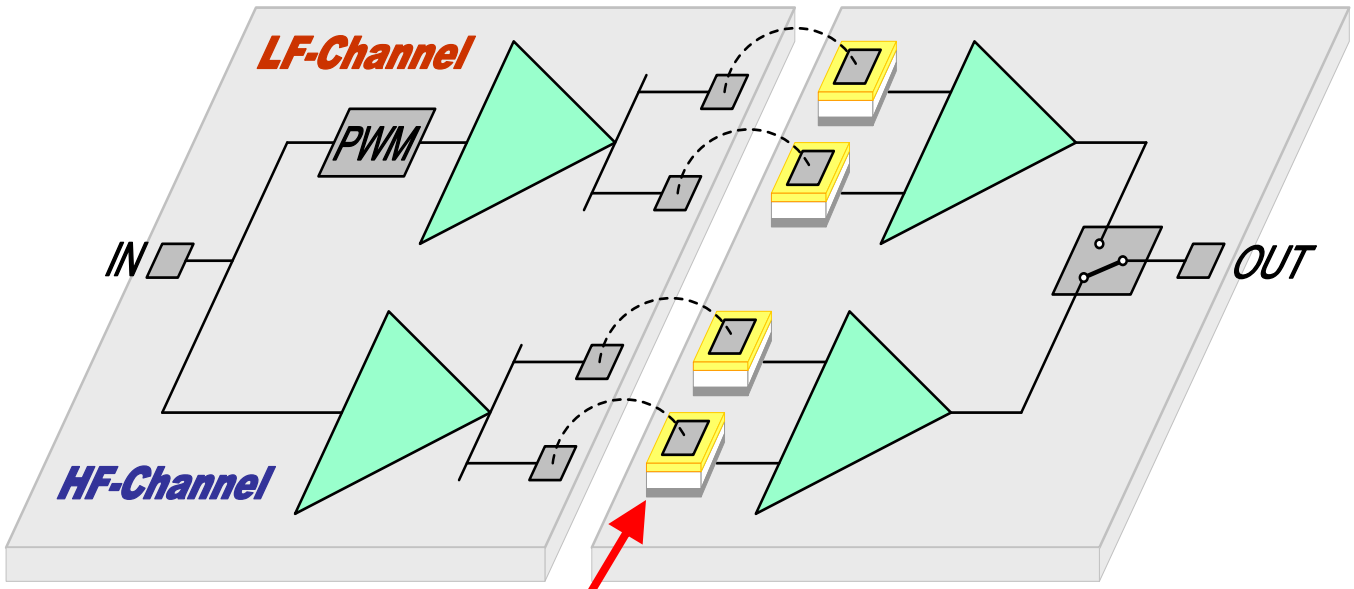

Transmit - Chip

Receiver - Chip

HV-Cap

High Voltage Capacitor Detail

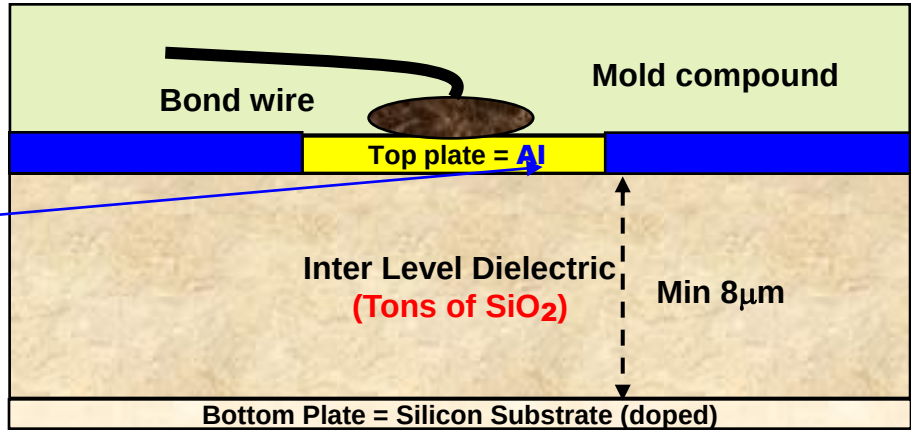

The change from copper to aluminum as new top plate material simplifies production and assures stable product delivery.

Creepage and Clearance

Creepage distance: Shortest distance between two conductive input to output leads measured along surface of insulation.

Clearance distance: Shortest distance between two conductive input to output leads measured through air (line of sight).

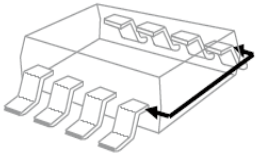

Package/ designation	Creepage mm	Clearance mm
Narrow body SOIC/ D	4.8	4.3
Gull wing / DUB	6.8	6.1
Wide body SOIC/ DW	8.1	8.3

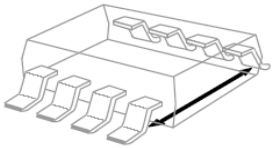

Note: Package-changed and now allows 8.3mm min !

Cross Sectional View

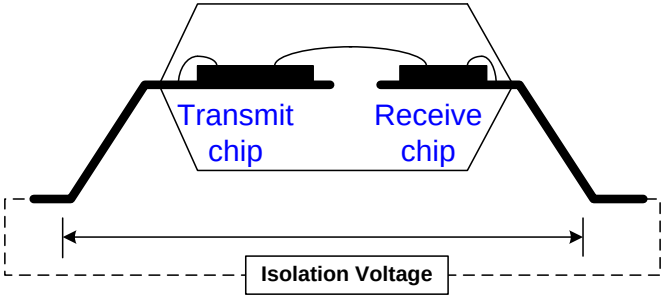

How reliable are they?

	Opto	Magnetic	Capacitive
Signaling Rate (Mbps)	50	150	200
Propagation Delay Time (ns)	20	32	12
Pulse Width Distortion (ns)	2	2	1.5
Channel-to-Channel skew (ns)	16	2.0	1.6
Part-to-Part Skew (ns)	20	10	2
ESD on all Pins (kV)	2	2	4
CM Transient Immunity (kV/us)	20	25	25
Temperature (^oC)	-45..125	-40..125	-55..125
MTTF @ 125^oC, 90% Confidence (yrs)	8	1746	2255
FIT@ 125^oC, 90% Confidence	14391	65	50
Magnetic Immunity @ 1 kHz (Wb/m^2)	-	100	100,000,000
Radiated Electromagnetic-Field Immunity *IEC61000-4-3 (80MHz-1000MHz)* *MIL-STD 461E RS103 (30MHz-1000MHz)*	 - -	 Fails Fails	 Complies Complies
High-Voltage Lifetime Expectancy (yrs)	-	< 10	> 28

Isolator Life Comparison

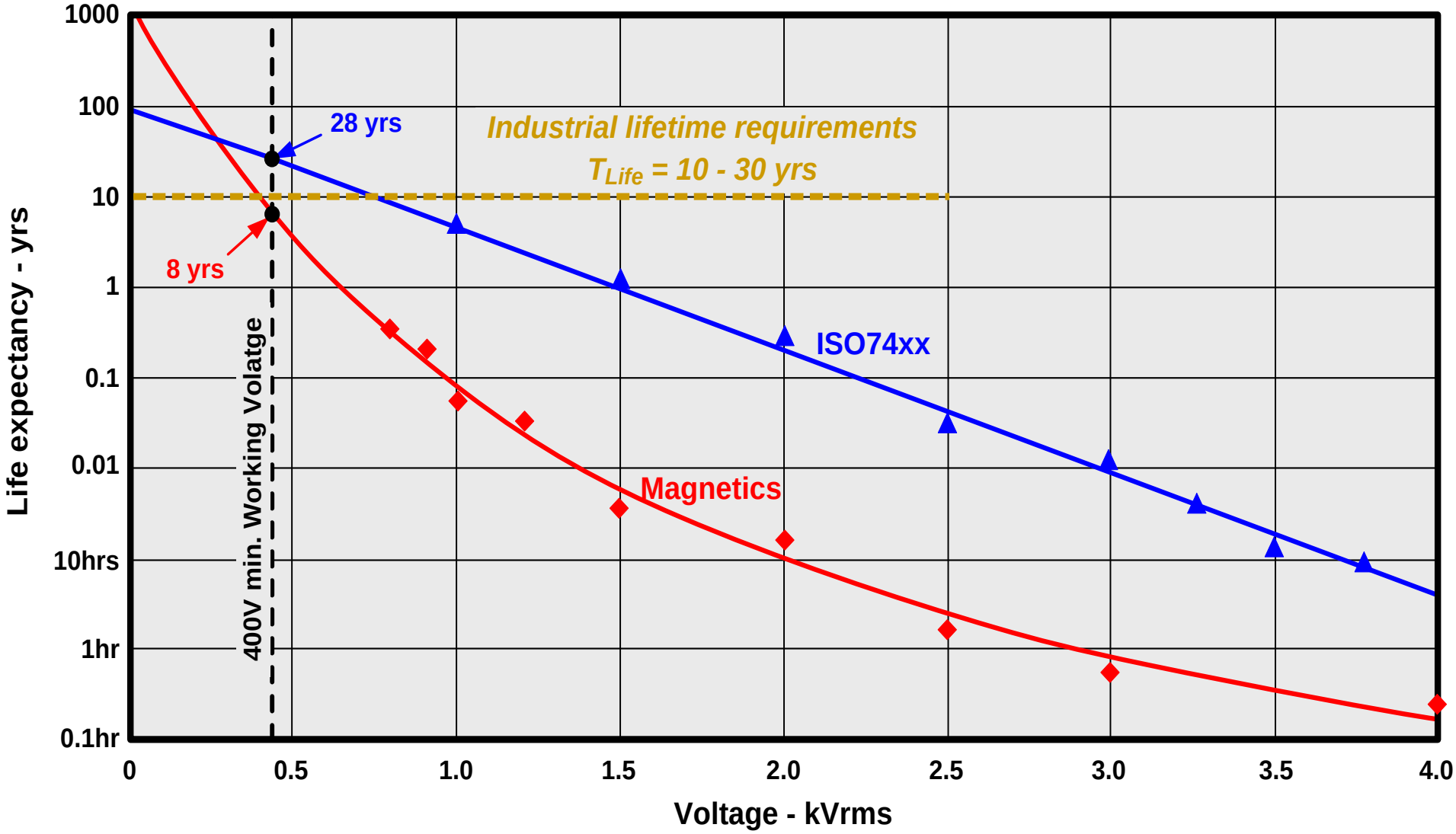

Icc Comparison

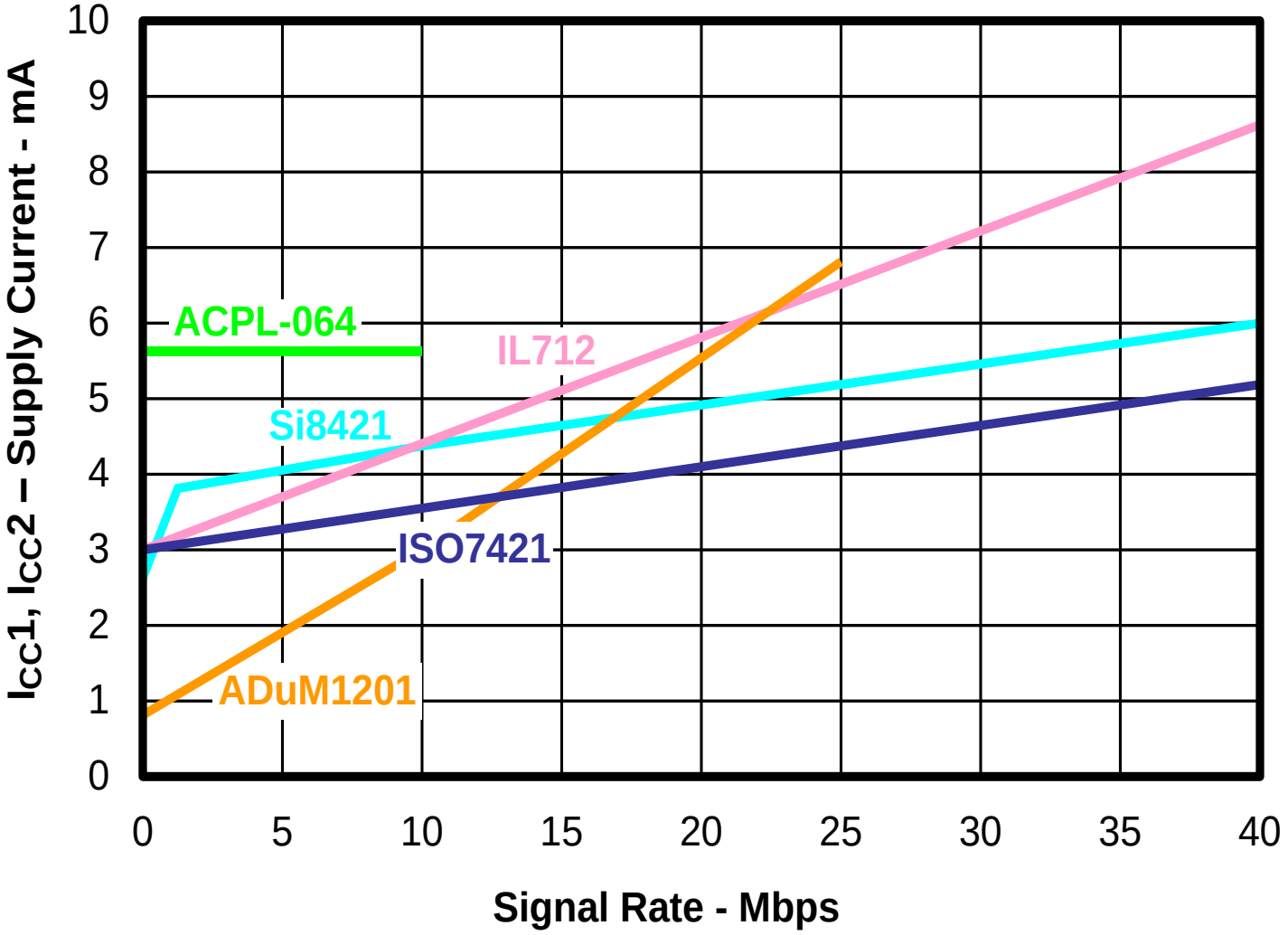

Digital Interface Isolation Portfolio

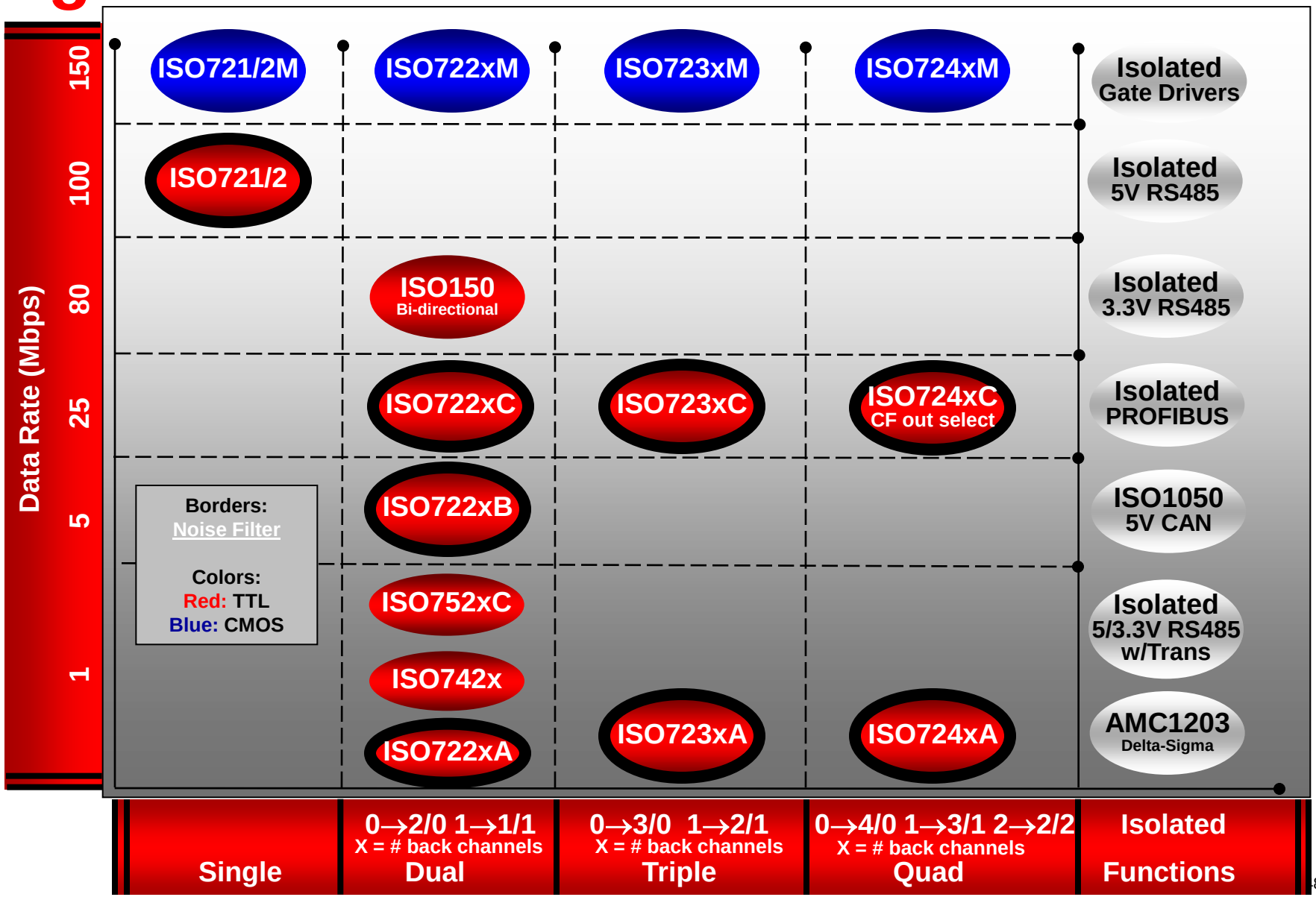

Texas Instruments

ISO1050 DUB / DW

4kV / 7kV Isolated - 5V CAN

7kV RTM
4Q10

Features

- Industry's first Isolated CAN transceiver
- Meets or Exceeds ISO 11898
- Isolated CAN with Ultra low loop time
- Very Low EME (Electro-Magnetic Emissions)
- Silicon Integrated SiO_2 Insulation
  - 4kVpk / 2.5kVrms - DUB
  - 7kVpk / 5kVrms - DW
  - 6.1mm and 8.3mm Clearance packages
  - UL1577 ; IEC ; CSA Approval Pending

Benefits

- Reduce Components and Board Space - 30%
- Meets DeviceNet and CAN timing requirements
- High Speed Isolation allows longer buses – 34%
- Reduces interference with other devices
- Proven Reliability of SiO_2 Insulation, Stable over Time, Temperature & Moisture
  - Life Span > 25 years @ 105°C

Applications

- Medical – ISO1050DW
- Motor Control
- Industrial Automation
- DeviceNet™ Data Buses
- SAE J1939 Standard Data Bus Interface
- ISO 11783 Standard Data Bus Interface
- NMEA 2000 Standard Data Bus Interface

Part #	Isolation	Temp (C)	Package
ISO1050DUB	4kVpk/2.5kVrms	-55 to 105	SOP-8
ISO1050DW	7kVpk/5kVrms	-55 to 105	SOIC-16

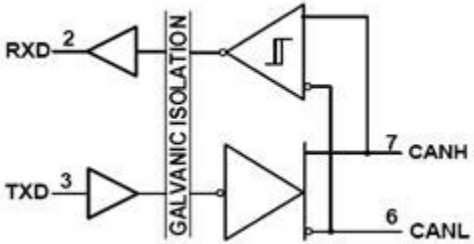

- Compatible with 75+ TI Processers with CAN controllers
  - C2000
  - TMS470 ARM
  - LM3Sxxxx ARM3 Cortex - M3
  - OMAP3505/3517

EVM

ISO1050EVM

ISO RS-485 with Transformer Driver

Features

- Integrated transformer driver
- Meets or Exceeds TIA/EIA RS-485
- Bus-Pin ESD Protection 16kV GND2 & 6kV GND1
- 1Mbps / 20Mbps / 40Mbps
- 1/8 Unit load – 256 nodes on a bus
- Glitch-Free & Failsafe (Open, Shorted, Idle)
- Silicon Integrated SiO_2 Insulator
- 4kVpk / 2500Vrms Isolation, 560V Working
  - UL1577, IEC 60747-5-2 (VDE 0884, rev. 2) , IEC 61010-1 & CSA pending

Benefits

- Ease of isolated power design
- Fully compliant to RS-485 Standard
- High Reliability in Harsh Environments
- Optimized for Long Cables Or High Speed
- Large buses
- Hot pluggable & Protected in all situations
- Proven Reliability of SiO_2 Insulation, Stable over Time, Temperature & Moisture
  - Life Span > 25 years @ 125°C

Samples now

RTM 4Q10

Part #	Duplex	Function	Speed	Package
ISO1176T	Half	Profibus	40Mbps	SOIC-16 (DW)
ISO35T	Full	3.3V RS485	1Mbps	SOIC-16 (DW)
ISO3086T	Full	5V RS485	20Mbps	SOIC-16 (DW)

Applications

- Energy Meter Networks
- Power Inverters
- Industrial Automation
- Building Automation Networks
- Motor Control
- HVAC

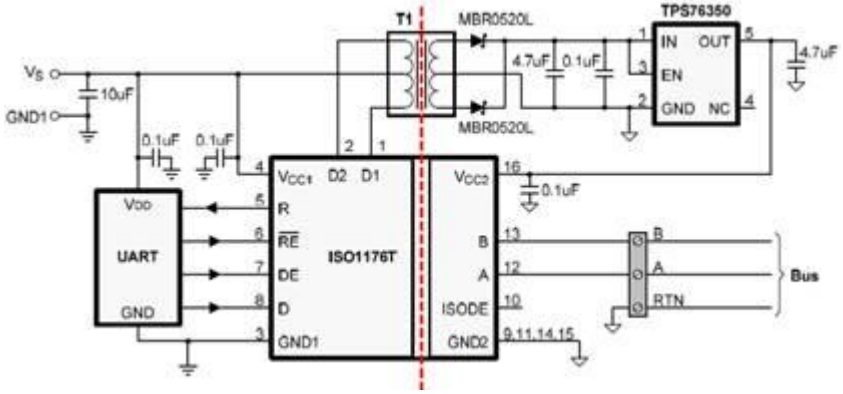

EVM – ISO1176TEVM / ISO35TEVM / ISO3086TEVM

ISO55xx Family

IGBT Drivers with integrated safety features and adjustability

Samples now

RTM 4Q10

Features

- Silicon Integrated SiO_2 Dielectric Capacitor
- DESAT protection - fault feedback, soft turn off, UVLO
- Adjustable DESAT level & blanking time, soft turn off option, UVLO options
- 200ns typ prop delay, 20ns typ pulse skew
- 4KV ESD on All Pins
- 3.3V and 5V Vcc1 Supported
- 5000Vrms Max/ 1200V working voltage
  - Wide SOIC Packages
  - UL1577, IEC 60747-5-2
  IEC 61010-1 & CSA pending

Benefits

- Proven Reliability of SiO_2 Dielectric,
  - Life Span > 25 years
- Improved safety & system performance
- Unique fine tuning ability without discretes
- Enabling low power application
- High Immunity for Noisy Environments
- High Reliability in Harsh Environments
- Flexibility with Power Supplies
- Certified by all 3 World Wide agencies

Part #	Voltage Range	Features	Package
ISO5500	15V to 30V	P2P compatible with HCPL316J	Wide SOIC-16
ISO5501	15V to 30V	Separate P and N channel outputs for slope control	Wide SOIC-16
ISO5510	15V to 30V	DESAT adjust, Soft turn off option, UVLO = 14V	Wide SOIC-16
ISO5511	10V to 30V	DESAT adjust, Soft turn off option, UVLO = 9V	Wide SOIC-16
ISO5512	15V to 30V	DESAT adjust, Blanking time adjust, UVLO = 14V	Wide SOIC-16
ISO5513	10V to 30V	DESAT adjust, Blanking time adjust, UVLO = 9V	Wide SOIC-16

Applications

- Industrial Motor Control
- Industrial Power Supplies/ Inverters
- HEV & EV power modules

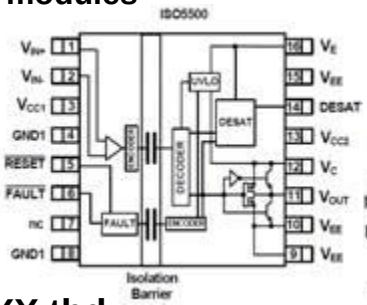

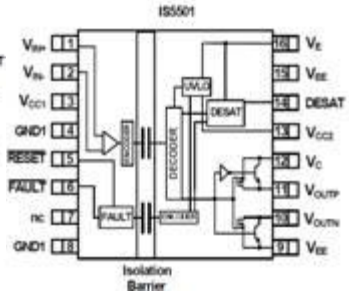

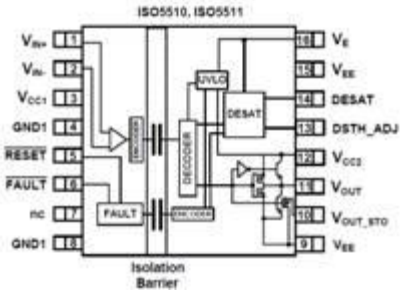

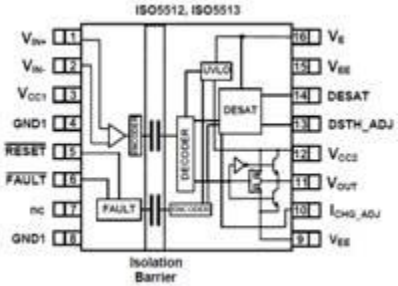

EVM

ISO EVM - ISO55XX tbd

Interfacing – what else?

Voltage Level Translation

TI's new auto-direction sensing translation devices are ideal for point-to-point topologies when interfacing devices that may or may not be operating at different interface voltage levels.
http://www.ti.com/lit/scyb018

ESD/EMI Protection

TI's stand-alone ESD Device Protection solutions provide a space-saving and cost-effective solution to protect the system interconnects from external ESD strikes.
http://www.ti.com/lit/sszb130

I²C - I/O expanders, multiplexers, buffers and repeaters

TI's new TCA family of low voltage I²C peripherals provide a single chip solution for I²C interface with next-generation low-voltage processors.
http://www.ti.com/lit/sszc003

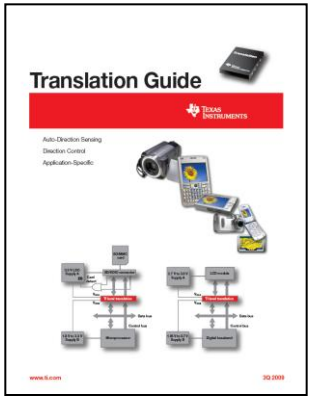

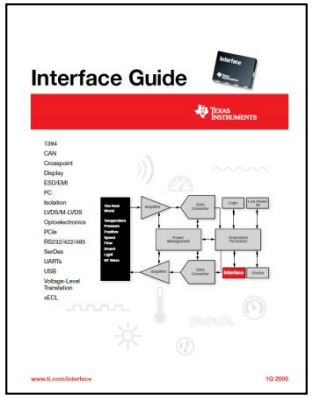

Interface Selection Guide 2009

http://www.ti.com/litv/pdf/sszt009d

Thank you for your interest