TI Technology Days 2010

TI Metering Solutions for Smart Grid

Yunus Karaborek

Agenda

- Introduction
- Stellaris Cortex M3
- Metrology
- Low-Power RF
- Power Line Communication
- Tools
- Support Collaterals

What is Smart Metering or "Smart Grid"?

Outside the home
(Wide Area Network)

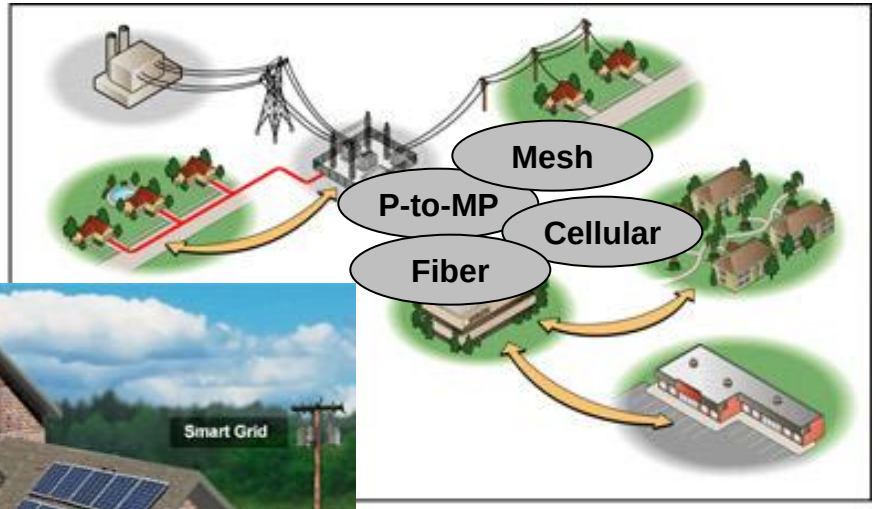

Inside the home
(Home Area Network)

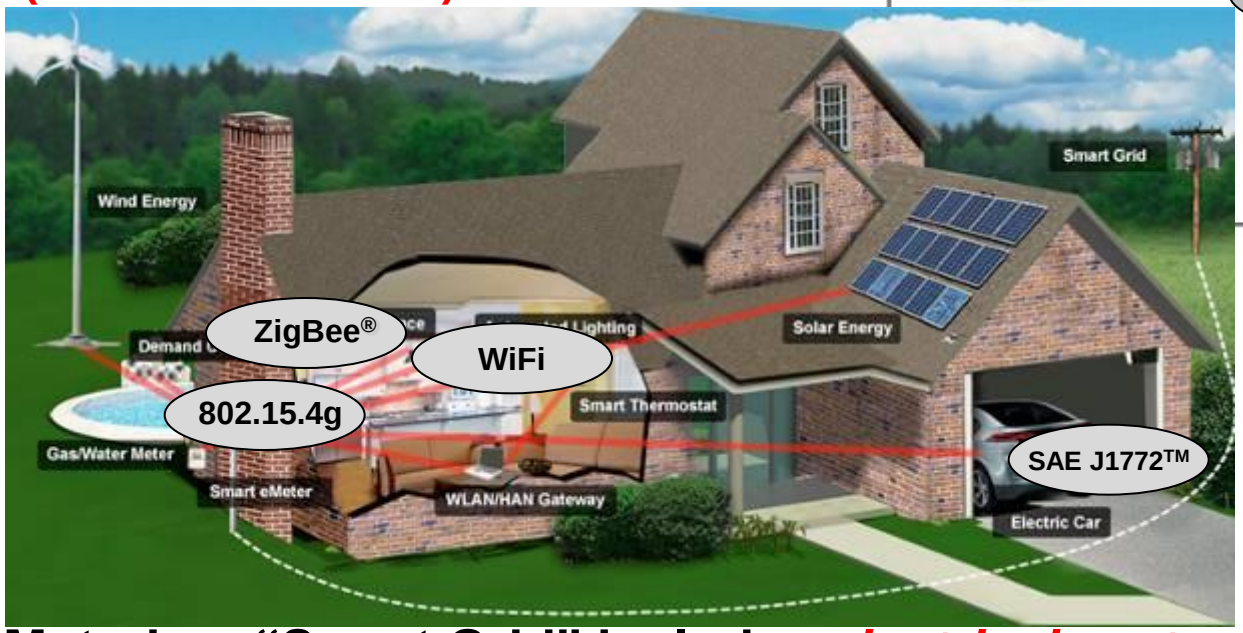

Smart Grid:

- Consumer participation
- Distributed generation
- Resilient, self-healing
- Future proof PHEV, broadband …

Metering, "Smart Grid" includes *electrical*, *water*, *gas* meters and adjacent segments in the home – *thermostats*, *smart appliances*, *in-home display*, *demand response unit, charging electrical vehicles (EVSE)*

The TI Proposal

Hardware:

Dedicated silicon

- **Metrology: MSP430™**
  Ultra-low power consumption, high-performance analog front end (delta-sigmas, comparators, ADC), RTC
  1-phase: FE42xx,F47xx, F471x3, F67xx
  3-phase: F471x6,7
- **Apps. processor: Stellaris®**
  Memory integration, peripheral set (UARTs, SPIs, GPIOs, I^2C etc.)
  Tempest class: LM3S1R21
- **Power-line coms.: C2000™**
  CPU performance (MHz), high-resolution PWMs, fast ADC
  Piccolo™, Delfino™ and Concerto™ class
- **Power-line AFE: PA**
  Current drive, integration, zero-crossing detection, RX-TX filtering
  PGA112, OPA564, AFE 03x
- **RF coms.: LPRF**
  Link budget, selectivity, low-power consumption
  CC1101, CC1120, CC2530, CC2520

Software:

Optimized offer

- **Metrology: MSP430**
  Reference designs provide SW building blocks for a quick start
  1-phase : FE42xx,F47xx, F471x3, F67xx
  3-phase : F471x6,7
- **Apps. processor: Stellaris**
  Significant base of code examples available. High quality dev. SW
  Stellaris Peripheral Driver Library
  IEC 60730 support
- **Power-line coms.: C2000**
  3rd party offer for SFSK, OFDM PRIME
  PRIME solutions ready, S-FSK via TI channels with ADDG
- **Power-line AFE: PA**
  Integration with the C2000 PLC solutions
  Test benches available from TI-Dallas
- **RF coms.: LPRF**
  Metering protocol stacks and dedicated profiles: ZigBee®-SE, WMBUS, ZigBee-IP from 2010
  Royalty free, fully certified with other suppliers at interop. events

Support:

The power of TI

- **People**
  Dedicated application support team for metering customers
  HW and SW, analog and digital
  Complete coverage: metrology, PLC, RF
- **External representation**
  TI presence at the regulatory bodies (governmental and private)
  PRIME (PLC-EMEA), Euridis, ETSI, IEEE802.15.4G, ZigBee Alliance
- **Development tools**
  Deliver robust and fully tested solutions. One to many approach
  Smart Meter board development, ZigBee large node network test
- **Logistic**
  Expertise with big production ramps
  TI production, assembly and test sites can be audited
- **Quality**
  Metering is as demanding as automotive
  Expertise in manufacturing (dies, packaging), CQA process

TI active participation in the Smart Grid Initiatives

ESMA EUROPEAN SMART METERING ALLIANCE

IPSO Alliance – promoting the use of IP for Smart Objects

Euridis.org

NIST National Institute of Standards and Technology

PRIME ALLIANCE

IEEE

dlms device language message specification

M-Bus

IEEE 802.15 15.4G

SGiP

SAE

ZigBee Alliance

TI Offer Contains All Ingredients for Optimized Smart Grid Solutions

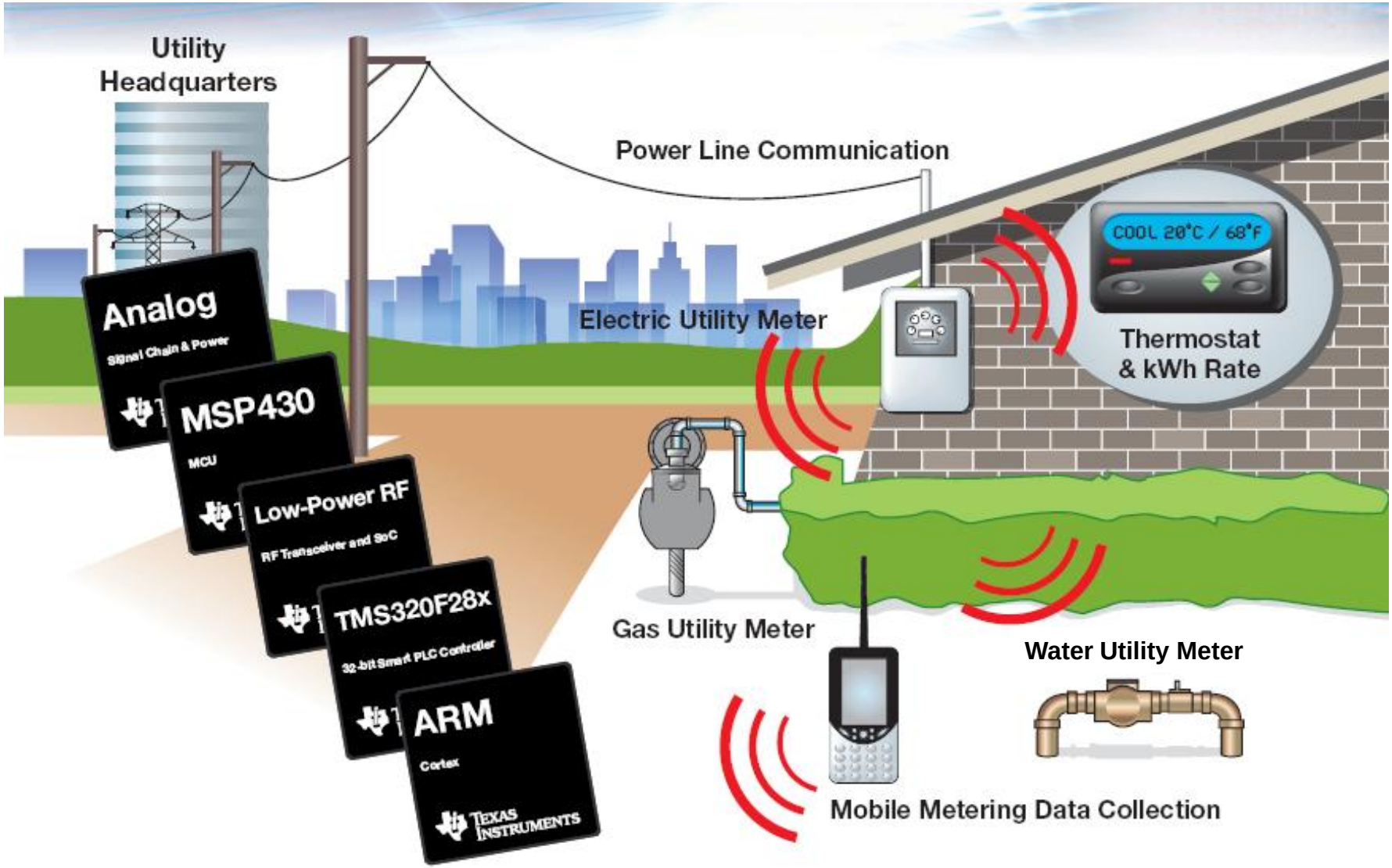

TI Technologies for Metering Solutions

Microcontrollers ARM-Based

16-bit

MSP430™

Ultra-low power

Up to 25 MHz

Flash 1KB to 256KB

RTC, ADC, MPY, USART

Measurement metrology MCU

32-bit real-time

C2000™

Real-time MCU ADC, Flash

Protocol stack & modem

Embedded Flash f. upgrade

Appropriate peripherals

PLC Modem Multi- modulation S-FSK/OFDM PRIME/G3

ARM 32-bit

Stellaris® M3

Industry std. low power

< 100 MHz

Flash 256kB with path to 1MB

Multi-serial port encryption Analog integration

Smart Grid application processor

ARM +

ARM 9, OMAPL1x

Industry std. High Perf GPP

Accelerator

MMU

USB, LCD MMC, EMAC, LINUX/WinCE

Data Concentrators/ Power Analytics

Complementary Analog

Low-power RF

CC

RF SoC transceiver

433 to 2500 MHz

Flash for SoC

Appropriate peripherals

Mesh-RF ZigBee®, WM-Bus

Analog

OPA, THS, ADC

Amp, LD, PGA ADC, DAC

Full range

Various technologies

Measurement PLC

Saving power

TPS, UCC

AC/DC, DC/DC, LDO

Full range

Ultra low-power high efficiency

Metering saving power

Smart Grid Electrical Meter System Partitioning

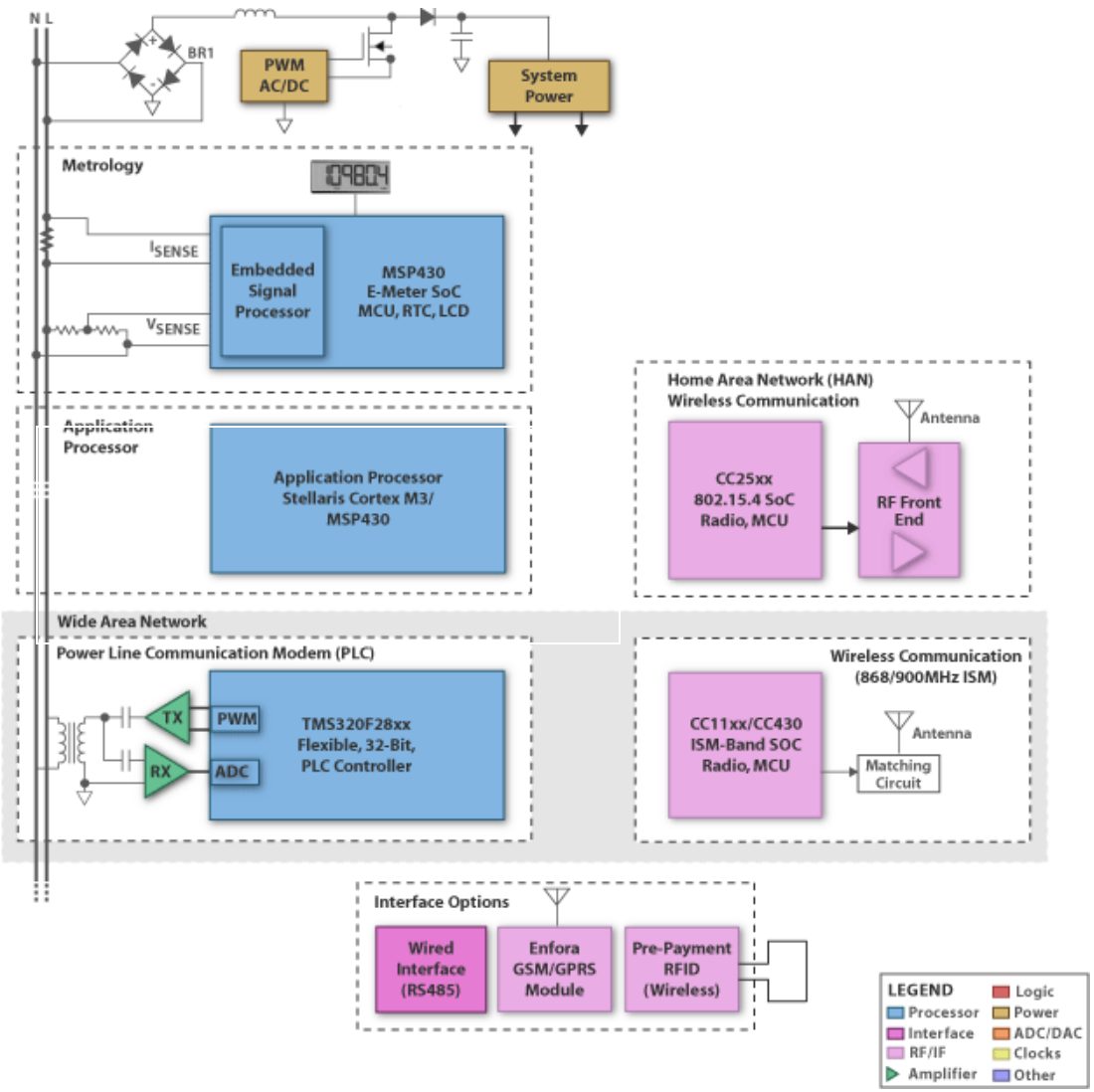

Hero products

Tools

Software

Developer network

Texas Instruments

TI Smart Metering Hero Products Summary

TI Hero Products for Smart Metering Available Today

Functions	Key TI products available today
Application processor	Stellaris® Cortex™-M3 LM3S1R21
Metrology SoC 1-phase	MSP430FE427A, MSP430FE4232 (64kB Flash), MSP430F4794, MSP430F47193 (128kB Flash)
Metrology SoC 3-phase	MSP430F47197
Water meter product	MSP430FW427
Gas meter product	MSP43046191 (120kB Flash)
ZigBee®	MCU + CC2520 + CC2591 CC2530 SoC, CC2530 ZNP SoC
Sub 1-GHz 802.15.4/proprietary Wireless MBUS	CC1101 CC430
Power-line communication	TMS320F2802x/3x Piccolo™ + PLC AFE TMS320F28xPRIME + PLC AFE OPA564 and PGA112 PLC line driver
RFID pre-payment RFID batterless interrogation back-uo	TRF7960 TMS37157
Wired M-Bus transceiver master-slave	TSS721A
Ethernet	LM3S2B90
WiFi	LM3S68xx
Real-time clock	BQ32000
DC/DC boost converter	TPS61220
Step-down converter	TPS62270
LDO	TPS780/81/82, TPS714
Green mode controller AC/DC & DC/DC	UCC28600

Application Processor for Smart Grid Stellaris® ARM ® Cortex™-M3

Simplicity	… in adoption and implementation
Robustness	… in design
Efficiency	… in system architecture
Determinism	… in control and connectivity
Flexibility	… in production

www.ti.com/stellaris

Stellaris® Cortex™-M3 Benefits for Smart Electrical Meters

AMR design

- One way communication
- Main processor is metrology engine

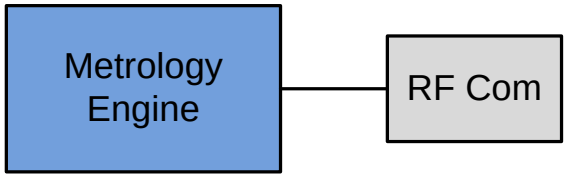

AMI/Smart Grid design

- Multi-way communication
- Main processor it the application/communication processor
- New Customer care-abouts

Security, Connectivity, Memory

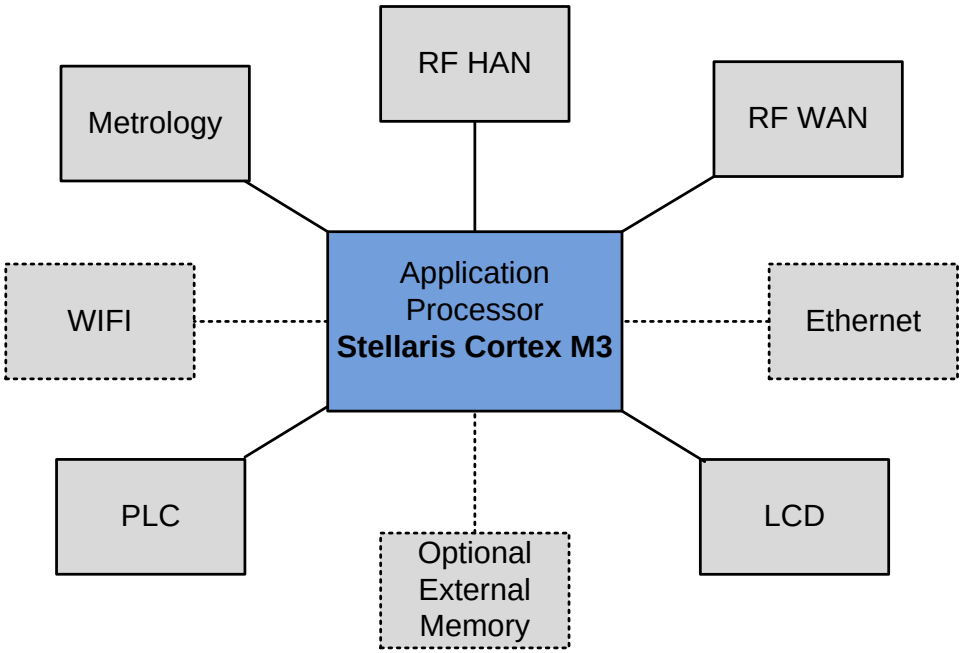

TI Stellaris® Cortex™-M3 = Reliable SW and IP Protection

- AES128 and AES256 encryption
  - AEC tables loaded in ROM
  - Software implementation gives more flexibility on the export control
  - AN01251: *Using AES Encryption and Decryption with Stellaris Microcontrollers*
  - Plan for hardware encryption as well when overall CPU cycles optimization is key

- Code security

- ROM implementation of IEC 60730 safety
  - System integrity self-test (CPU, ADC, Flash, CRC…)
  - Ensures reliable operations

- High-integrity RTOS implemented in ROM

Stellaris® Cortex™-M3 Silicon Roadmap for Smart Grid

*Start today with a **pin-to-pin compatible roadmap** till 2MB Flash*

LM3S***9B90*** Ethernet Options
LM3S***5B91*** USB Options

LM3S***1R21*** 256kB flash
LM3S***2793*** 128kB flash

Tempest Class

- **256K Flash & 48 K SRAM**
- 7 Serial Connections
- AES Encryption & CRC-16

Samples Now
TMS by 3Q10

LM3S***9D90*** Ethernet Options
LM3S***5D91*** USB Options

LM3S***1D21*** 512kB flash
LM3S***1G21*** 384kB flash

Firestorm V1

- **Up to 512kB & 96kB RAM**
- Advanced 12-bit ADC

Samples April 10
TMS in 3Q10
Version 1
Same power numbers as Tempest

Firestorm B

- **Up to 512kB & 96kB RAM**
- Additional Com Support
- Reduced Power Consumption

Samples 3Q10
Power Optimization Focus

Brainstorm Class

- **Up to 2MB Flash**
- New RTC (1uA target)

Samples end 2010

2009 2010

Development path with TI Stellaris Cortex M3

- **NOW**
  - Start code development with Tempest LM3S1R21
    - Tools are available on 256kB version
    - Develop majority of application today
    - Data sheet available (http://focus.ti.com/docs/prod/folders/print/lm3s1r21.html)

- **2Q10**
  - Move to 512kB Firestorm V1
  - Pin to Pin and code compatible
  - Same peripherals + new ADC 12-bit
  - Same power number as Tempest

- **3Q10**
  - Migrate to pin to pin compatible Firestorm B
    - New power consumption figures thanks to optimization work: 500uA/MHz target in certain cases
    - More Serial connections : up to 6 UART, 4SCI, 2I2C.
    - Pin to pin compatibility to 1MB+ roadmap

- **4Q10**
  - 1MB Flash available
  - New RTC (1uA target)

Stellaris® ARM® Cortex™-M3 Smart E-Meter Design Example (EMEA Type)

Metrology + HAN WMBUS + WAN + M-Bus + PLC

System available today

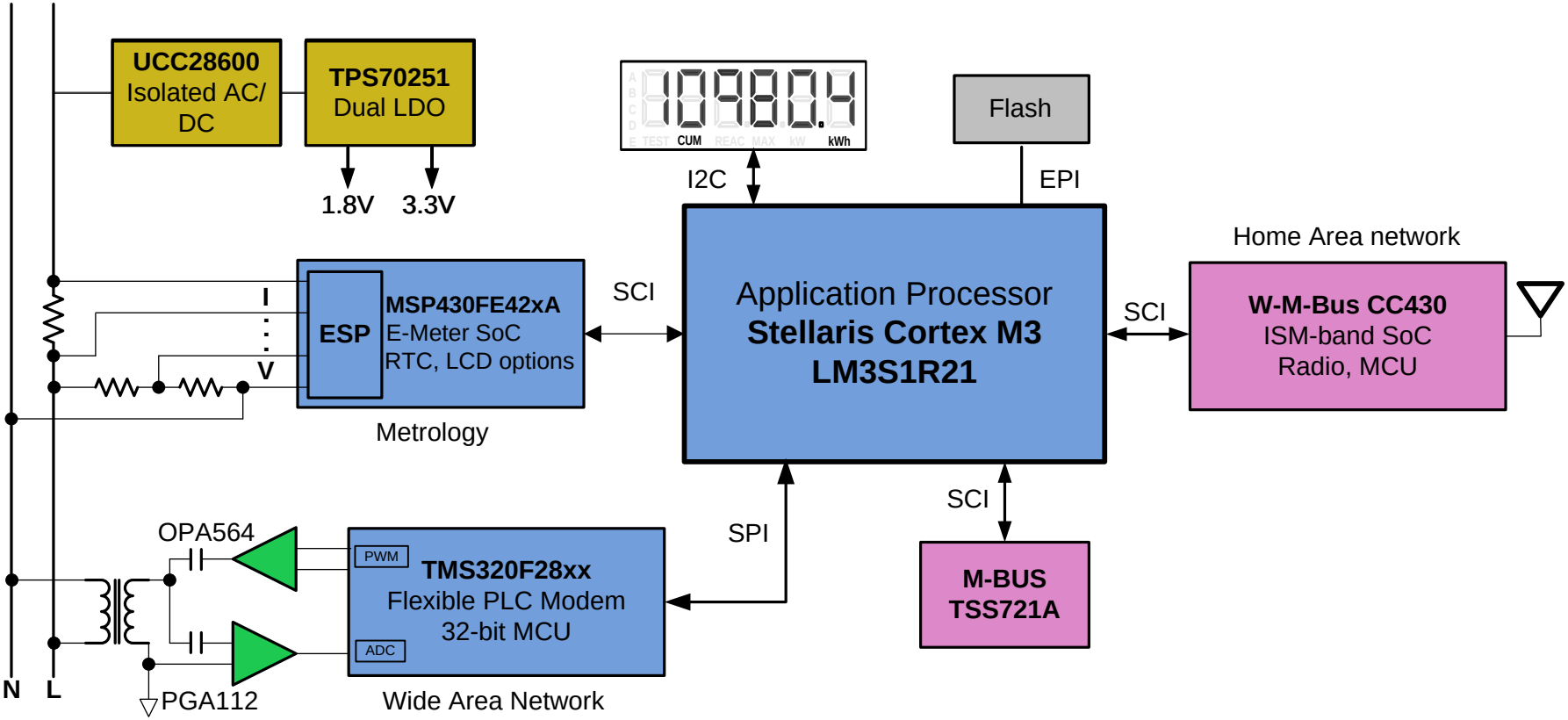

Texas Instruments

Stellaris® Cortex™-M3 Summary

- Stellaris Cortex-M3 meets smart meters requirements
  - Connectivity
  - Memory
  - Security
- Stellaris Cortex-M3 is available today
- Pin-to-pin compatible path with higher memory
- Path to Low Power
- System optimization paths with PLC integration or RF integration

TI Metrology Solution for E-Meter
Product offering and roadmap

MSP430™, Metrology SoC, Metrology AFE

www.ti.com/msp430

www.ti.com/430metering

MSP430™ Portfolio

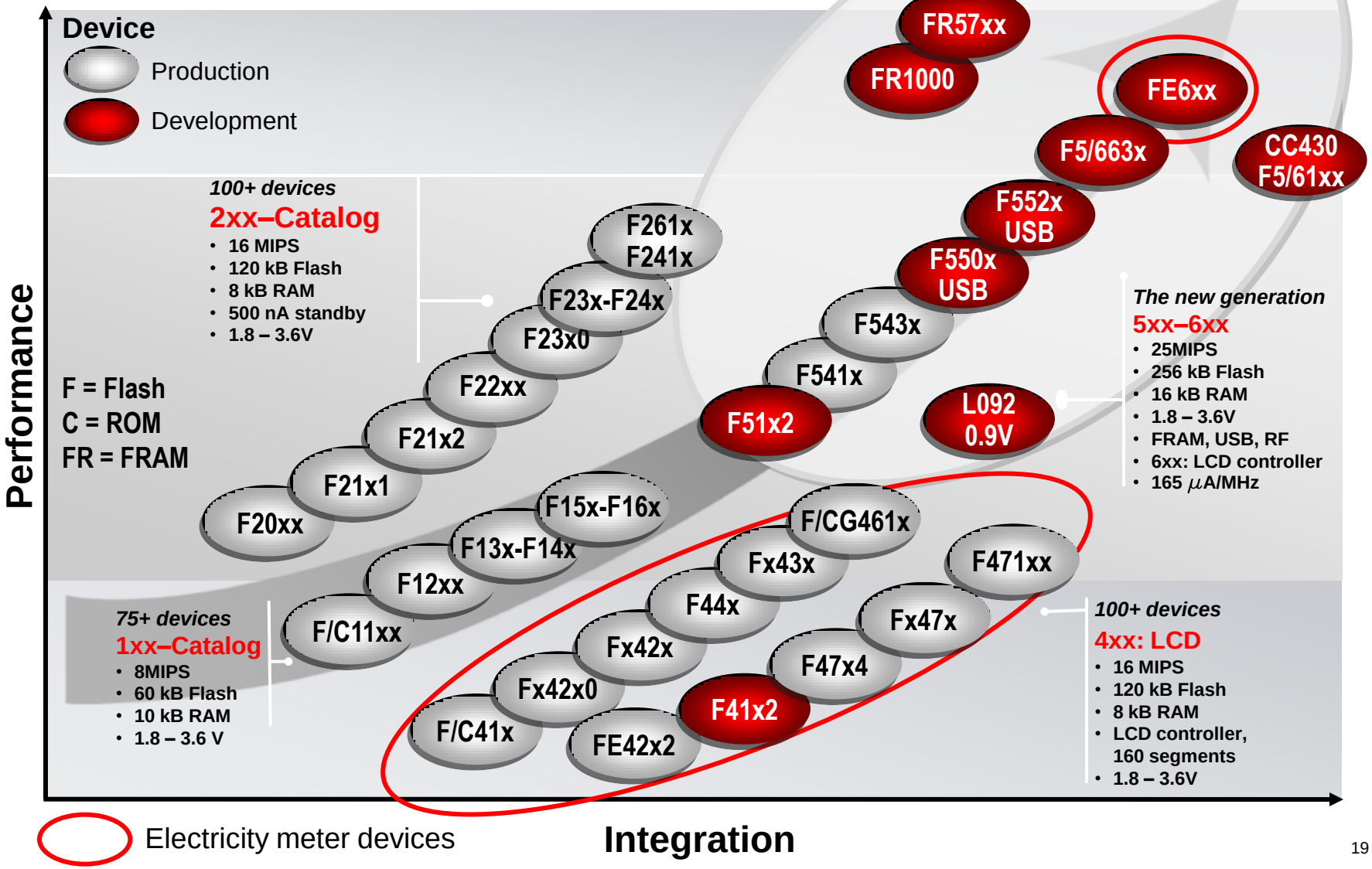

Electricity meter devices

Texas Instruments

MSP430 E-Meter Portfolio

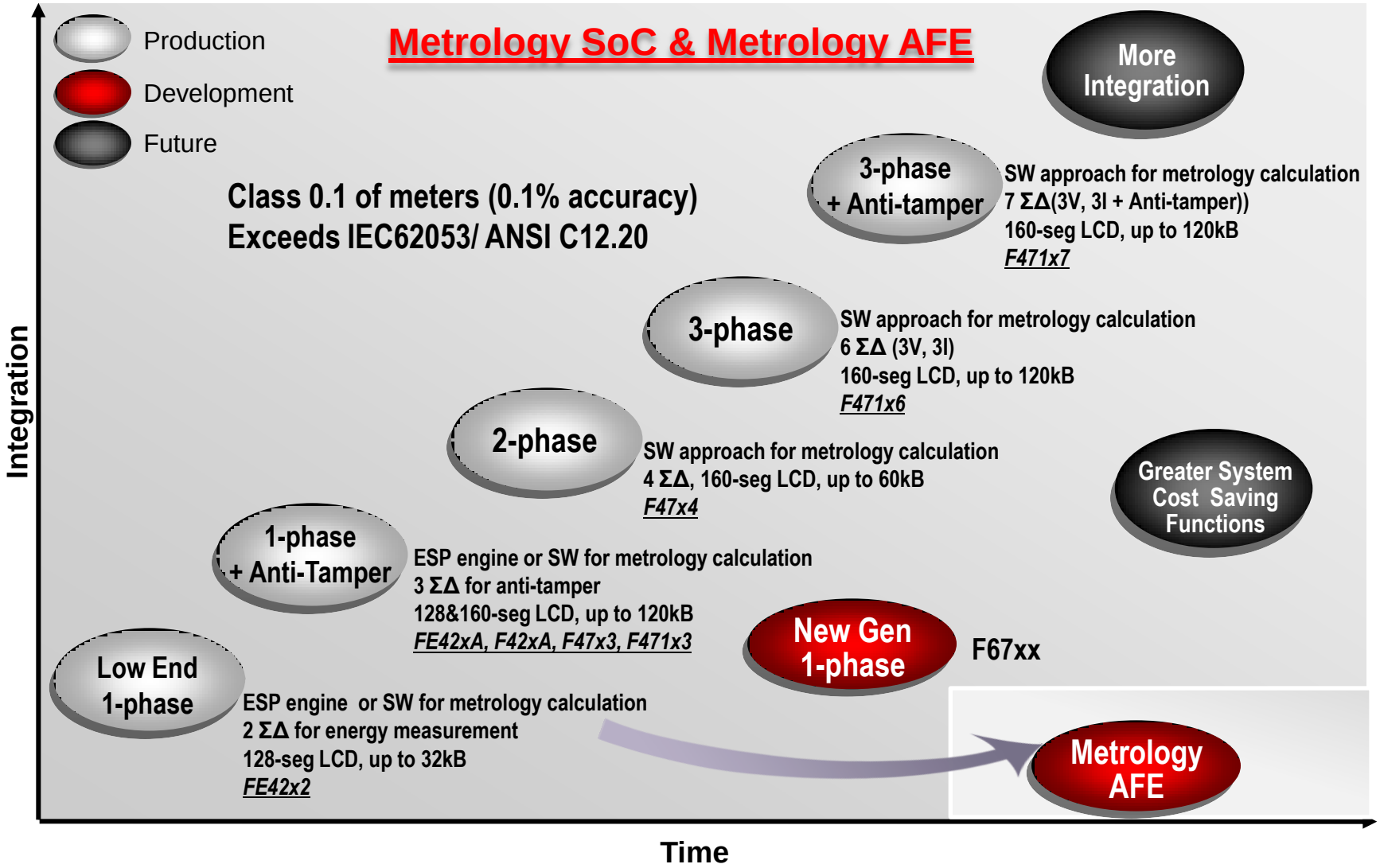

Next-Generation E-Meter SoC: F67xx

New key features for 3Q10

1) 50% active power reduction
2) RTC-battery backup support
3) More flexible com ports
4) PMM supporting multiple power supplies

In development as well

1) 320-segment LCD driver
2) New flexible ESP engine

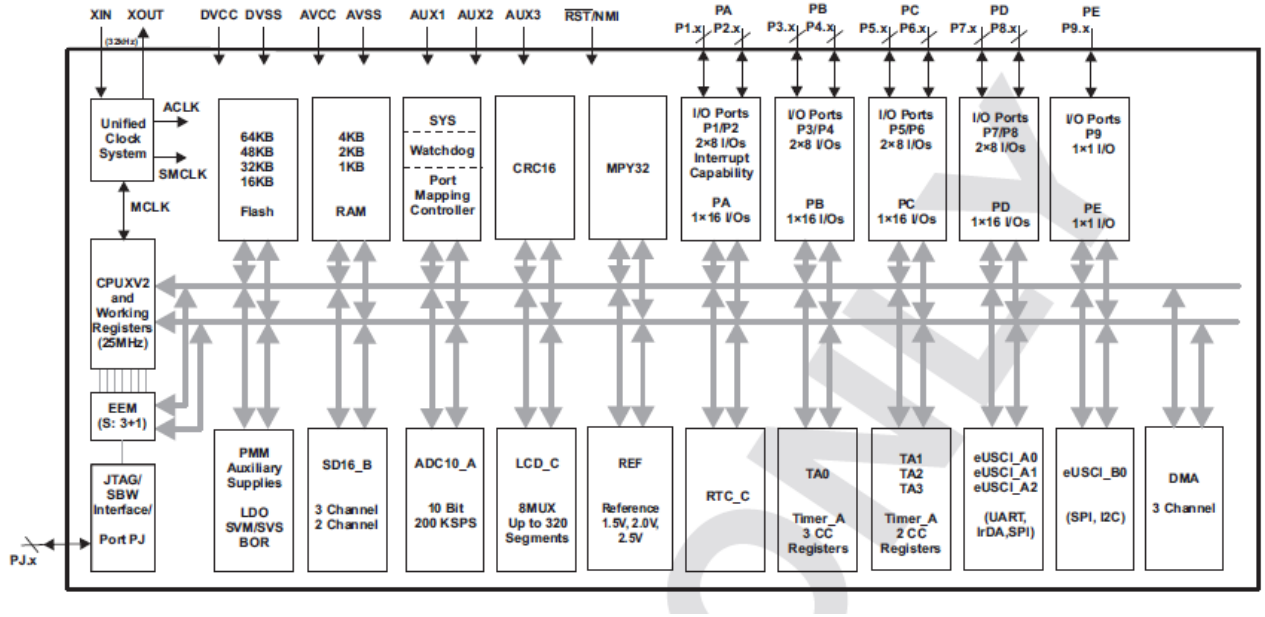

System resources

– Up to 128kB Flash

– Preliminary Data Sheet available: **metering@ti.com**

Texas Instruments

TI Metrology AFE Development

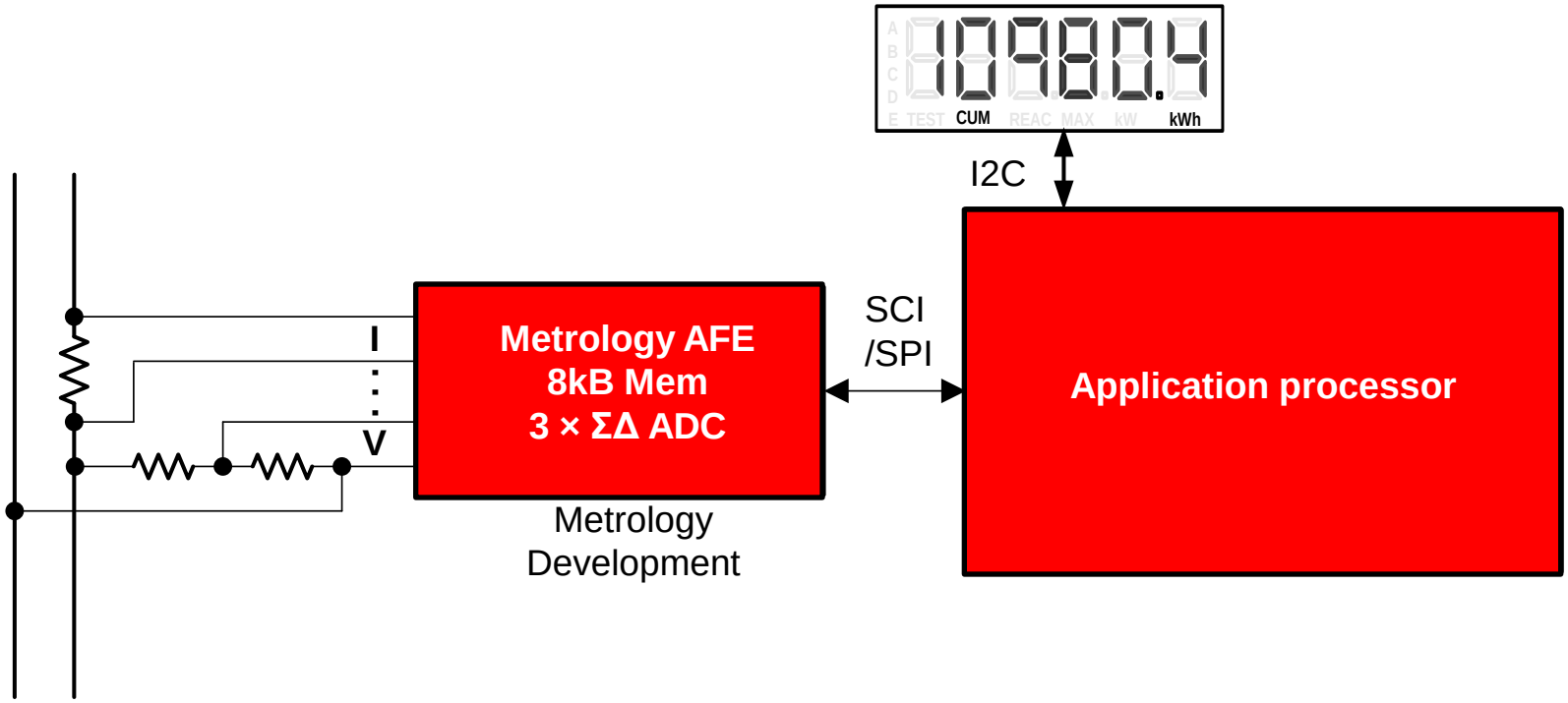

- Metrology AFE computes minimum key energy information and sends them back to the application processor via serial connection
- Low-cost target
- Specification under development and subject to change
- Report business opportunities back to the Metering BU: metering@ti.com

TI Information – Selective Disclosure

MSP430AFE

Cost Optimized, Flexible 1-phase Metrology Analog Front End

Applications include:
- Single phase AFE e-meter
- High-precision measurements
- Anti-tampering
- Digital sensoring
- Digital Power monitoring

Performance
- 16-bit RISC architecture, 62ns instruction cycle time
- Ultra-Low-Power, Integrated Intelligent Peripherals and Easy-to-Use

Features
- Ultra Low Power
  - Low Supply Voltage Range 1.8 V to 3.6 V
  - Ultra-low Power Consumption (*final targets tbc*)
    - Active Mode: 220 µA/MHz
    - Standby Mode: 0.5 µA
    - Off Mode: 0.1 µA
- Flash option for user flexibility
- ROM option for ultra low cost
- 3 -Sigma Delta Converters with Simultaneous Sampling
- Small package (28-pin TSSOP)

Benefits
- Metrology function with <0.1% accuracy for precise measurements with a 2400:1 dynamic range
- Easy interfacing to application processor with UART/SPI
- Customizable Metrology AFE thanks to Software Flexibility
- Robust SW development thanks Simultaneous sampling
- Supports anti-tampering with the 3rd ΣΔ
- Fully compatible with MSP430 Metrology SoC
- Low cost implementation

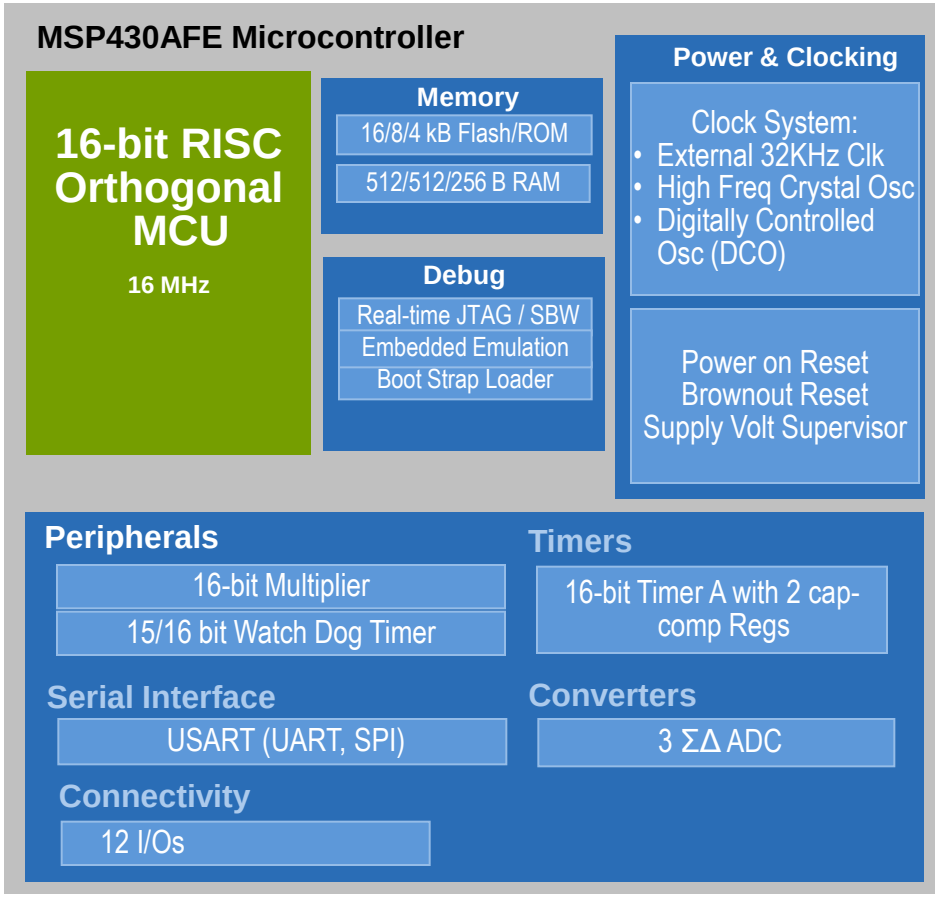

Samples 3Q10 – specs subject to change

TI Information – Selective Disclosure

Metrology Solution Summary

- 15 years expertise on energy measurement market
- Strong metrology SoC available today
- Heavy investment from TI on new devices
- Roadmap is expanding
  - Metrology SoC available today moving to flexible portfolio from 1-phase to 3-phase up to 256kB Flash
  - Metrology AFE development
  - New integrated functions for greater System Cost reduction

TI Low-Power RF Metering Solutions

Portfolio – Key products
IEEE 802.15.4 ZigBee® Smart Energy 2.0
Sub 1-GHz - Wireless M-Bus
IEEE 802.15.4g – Smart Utility Network

www.ti.com/lprf

TI's Wireless Smart Metering Solutions

- RF solutions for all open ISM bands : sub1GHz and 2,4Ghz

- Also specific Metering bands
  - in China - 470-510MHz : CC1100E
  - in Japan - 950-960MHz : CC1120 (2010)
  - in Europe - 169MHz : CC1125 (2010)

- Very flexible radios to support proprietary protocols and known standardized solutions :
  - Wireless M-bus
  - ZigBee (with Smart Energy profile)
  - 6LowPAN
  - KNX (Konnex)

- Close contact with standardization working groups

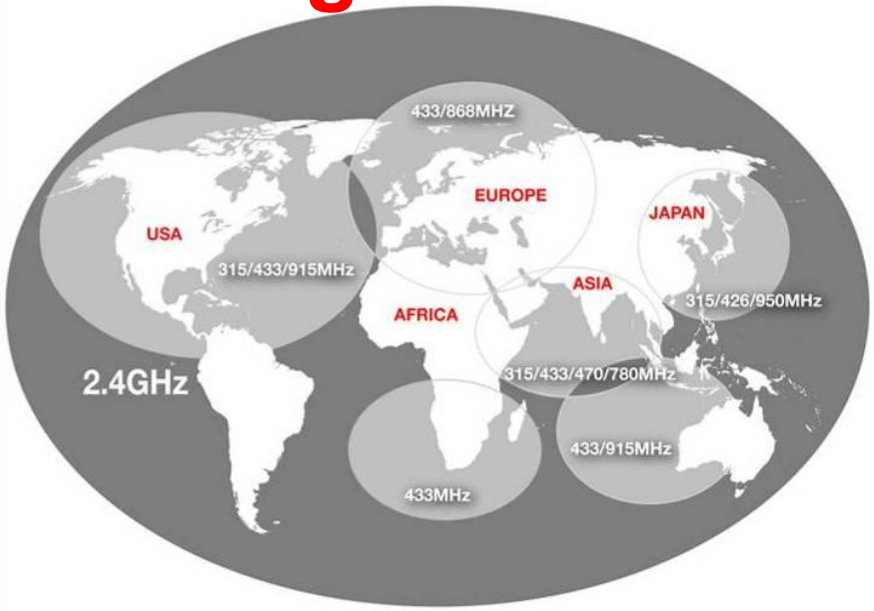

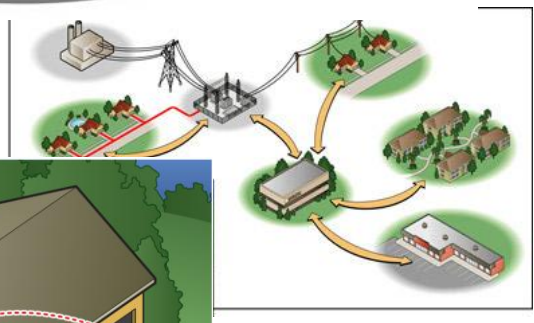

TI's Three Solutions for RF Applications

	RF systems-on-chip	Application MCU RF radio	Application MCU+ RF protocol processor
Application			MSP430 Stellaris
Wireless protocols	RF SoC (CC430, CC2430, CC2510, CC1110)	MSP430™ (F54xx, F24xx, F26xx) Stellaris®	Protocol processor (CC2480)
Radio		Transceiver (CC1101, CC2500, CC2520)	

LP-RF Product Portfolio Today

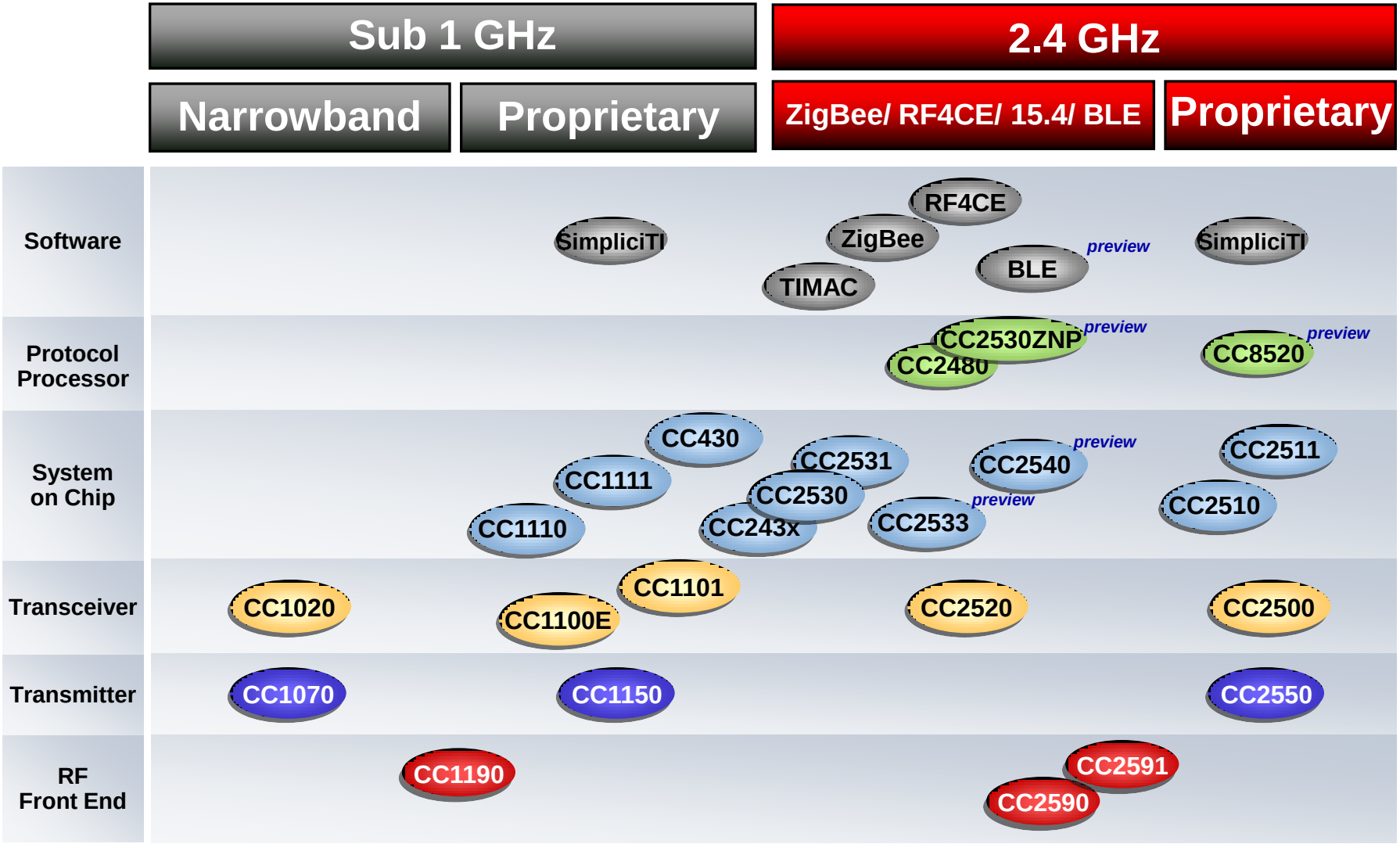

Existing ZigBee® Software

	ZigBee Pro	ZigBee RF4CE	ZigBee IP
Applications	Smart Energy Home automation Building automation Healthcare	Remote controls CE devices (TV, set top box, etc…) Point-to-point controls	Smart Energy (Meters, in-home displays, thermostats, etc.) Building automation Healthcare
Topology	Large RF mesh networks	Point-to-point and point-to-multipoint controls	Large RF mesh networks based on IP protocols
Product	Z-Stack™ 2.2.0 (**ti.com/z-stack**) Available now	RemoTI 1.0 (**ti.com/rf4ce**) Available now	Q4'09 (alpha) Q2'10 (final)
Hardware	CC2530, CC2520 / MSP430, Stellaris® (upcoming)	CC2530	CC2530, CC2520 / MSP430 Stellaris (upcoming)

Metering related

ZigBee SE1.0 supports ZigBee Pro

Architecture Example

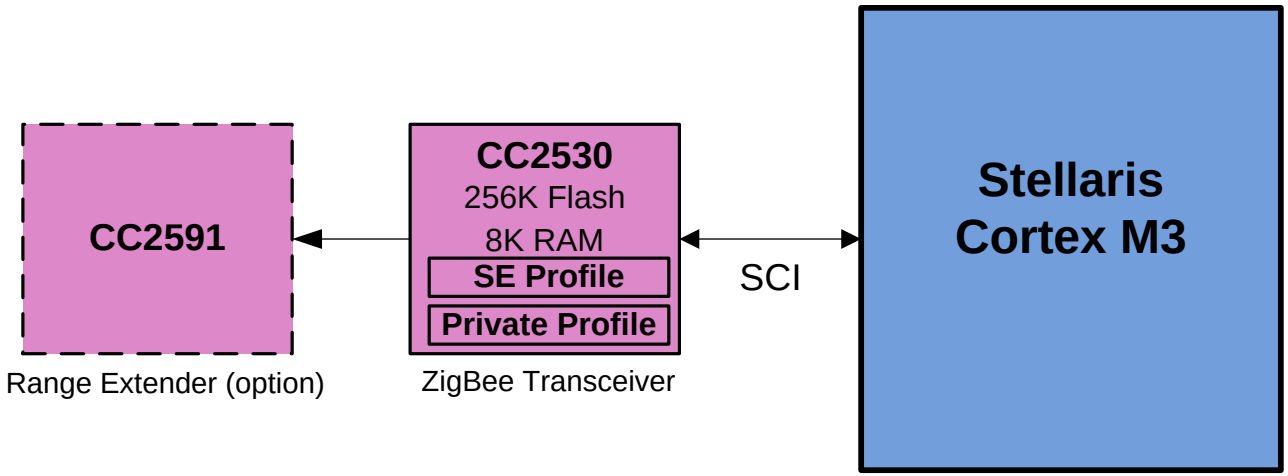

- Stellaris® Cortex™-M3 for application processor (electricity meter case)
- Full ZigBee stack resides on the CC2530
- ***Pros:*** Maximum software flexibility on the application processor
- ***Cons:*** UART protocol is part of the Z-Stack™ installer but customer needs to develop packet formatting to talk to SE profile. Requires support from TI who has all the TI has all the pieces.
- Optional CC2591 shown for extended range support (tradeoff: power consumption)

Low-Power RF Summary

- Full support today for 802.15.4 PHY
  - 433 MHz, 868 MHz, 915 MHz
  - WMBUS
  - 2.4-GHz ZigBee®
- Support for both transceivers and SoC
- Solutions coming-up for ZigBee SE 2.0
- Solutions coming-up for 802.15.4g

Power-Line Modem Solutions

S-FSK
OFDM
PRIME
G3
Green PHY

TI is Very Active in Power-Line Communication

- **PRIME principal member**
  - TI is a principal member of PRIME consortium

    www.prime-alliance.org

    Solution available and delivered to customers worldwide
  - Successful MAC/PHY on field trials in Madrid
  - Interoperability test with current technology – Press release link
- **Narrowband supporter**
  - **S-FSK** IEC61334-4-32 LLC
  - **OFDM PRIME** and **G3**
- **HomePlug contributing member**
  - HomePlug Smart Energy TWG
  - Submitted narrowband proposal, merged with HP-LR
- **Electrical car charging (SAE/IEC)**
  - Committees: TEVHYB6 (PHEV), TEVEES17/17B (EMI)
  - J551-5 analysis on conducted emissions in PHEV
  - Worked with J1772™ to clarify EMI requirements

PLC Frequency Bands

- **PLC frequency bands in Europe**
  - Defined by the CENELEC:
    - CENELEC-A (3 kHz – 95 kHz) are exclusively for energy providers
    - CENELEC-B, C, D bands are open for end-user applications
  - Bands A, B and D protocol layer is defined by standards or proprietarily defined
  - Band C is regulated – CSMA access

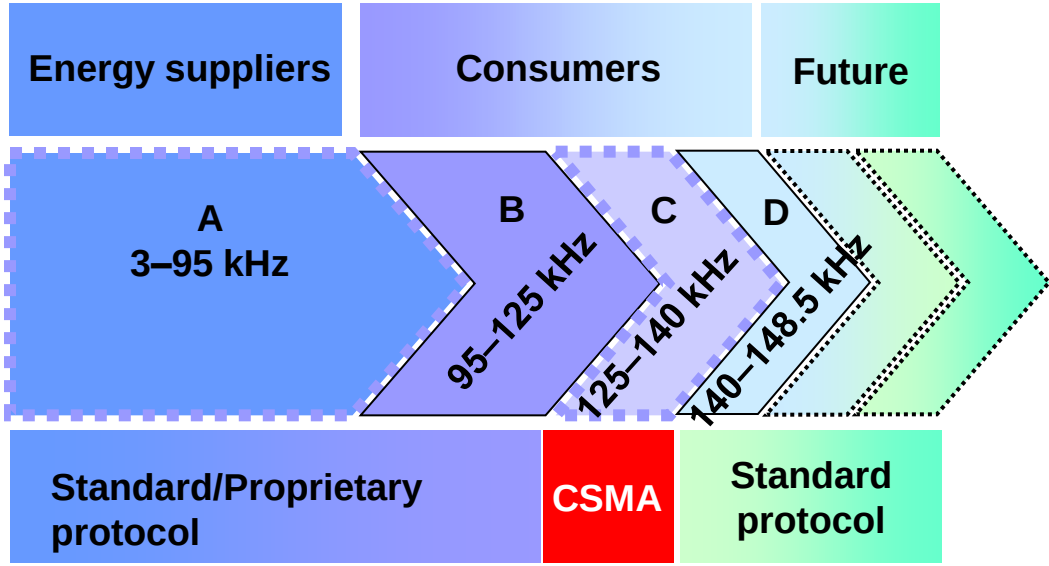

- **PLC frequency bands in USA**
  - Single wide band – from 150 to 450 kHz
  - FCC band 10 kHz – 490 kHz
  - Access protocol defined by standard
  - HomePlug broadband: 2–30 MHz

- **PLC frequency bands in Japan**
  - ARIB band 10 kHz – 450 kHz

- **PLC frequency bands in China**
  - 3–90 kHz preferred by EPRI
  - 3–500 kHz single-band not regulated

TI Smart Meter Board Development

- **Demonstrate key TI components available today for a smart meter solution**
- **Metrology**
  - Based on the 3-phase **MSP430™** meter board
- **900-MHz wireless solution**
  - Based on **CC430** 900-MHz RF SoC
  - Wide Area Network support (WAN)
  - Wireless MBus support
- **2.4-GHz wireless solution**
  - Based on **CC2530** 2.4-GHz ZigBee®/IEEE 802.15.4 RF SoC
  - Home Area Network support (HAN)
- **Power-line communication**
  - Based on **F28x** 32-bit MCU
  - S-FSK and OFDM
  - Solutions up to 128kb/s
  - WAN and HAN support

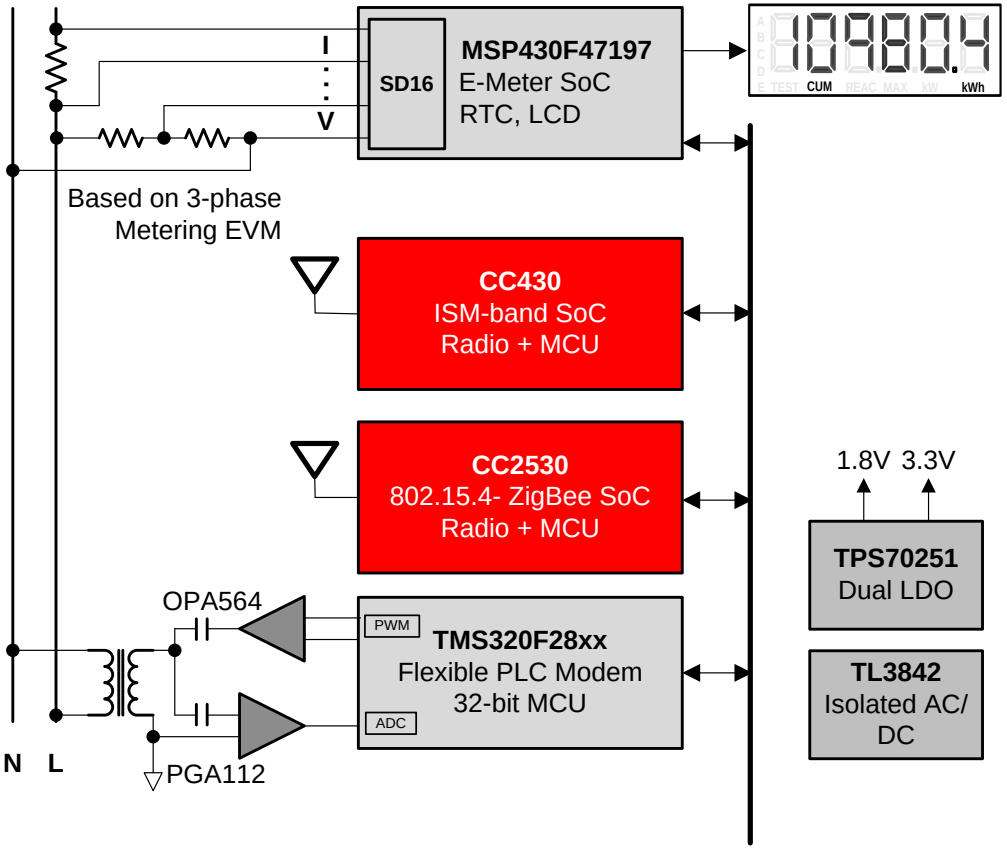

Smart Meter Board Outline

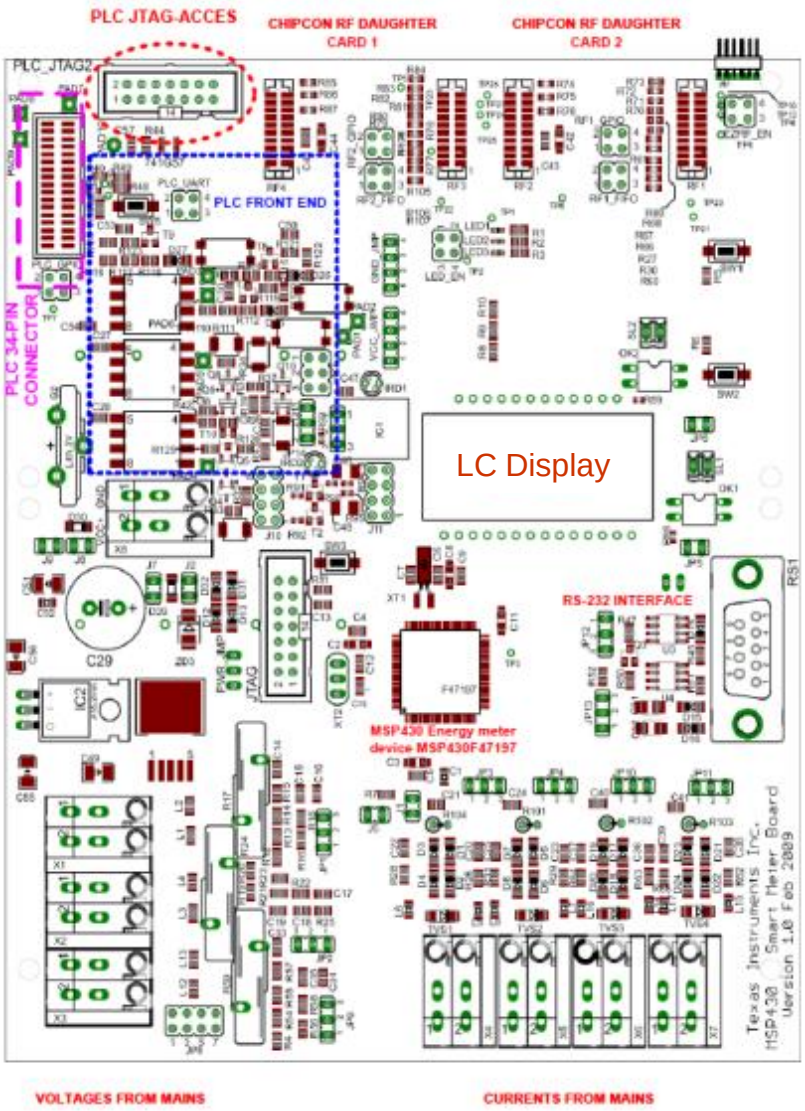

SMB Demo Setup: Two-Way Communication

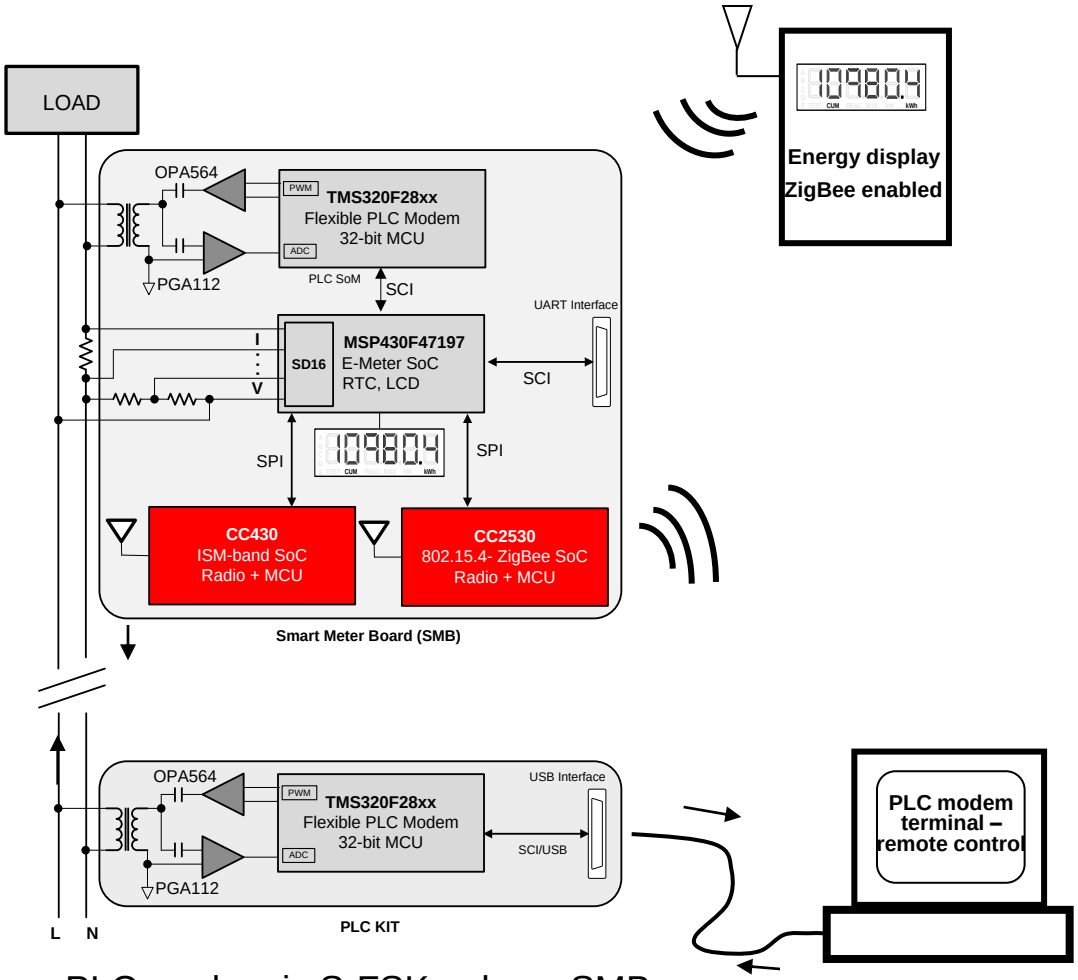

- PLC modem is S-FSK only on SMB
- PRIME OFDM integrated by 1Q2010
- **Available by request at metering@ti.com**

From the meter to the outside world

- MSP430™ measures energy
- Measurement information sent to wireless display via the CC2530
- Measurement information sent to remote PLC modem terminal via power line with the 32-bit F28x MCU

From the outside world to the meter

- New configuration set-up sent to the meter via power-line (new tariff profile, new parameter …)
- Impact on measurement and visible change displayed on energy display

Future steps

- Future communication upgrade with 900-MHz CC430 options
- Load demand response

SMB Components: Hardware and Software

Function	Device	Corresponding software	Next steps
Metrology	**3-phase MSP430F47197**	**3-phase metrology (see MSP430™) + com with PLC and com with HAN RF**	**TBD**
Power line	**F2808**	**S-FSK**	**PRIME**
HAN RF	**CC2530**	**ZigBee® SE1.0**	**SE2.0**
WAN RF	**CC430**	**SimpliciTI**	**WMBUS**

TI Lighting Communications and Control

- **TI solutions solve issue of lighting comms and control without expensive re-wiring**
- **Control via wireless**
  - **2.4GHz, <1GHz**
  - **ZigBee, 802.15.4, DALI over SimpliciTI**
  - **6loWPAN**
- **Control via "wired"**
  - **Power line communications (PLC)**
    - **DALI over PLC**
    - **PLC lighting control**
      - **Streetlight control**
        - » **LonTalk alternatives**

DALI over PLC

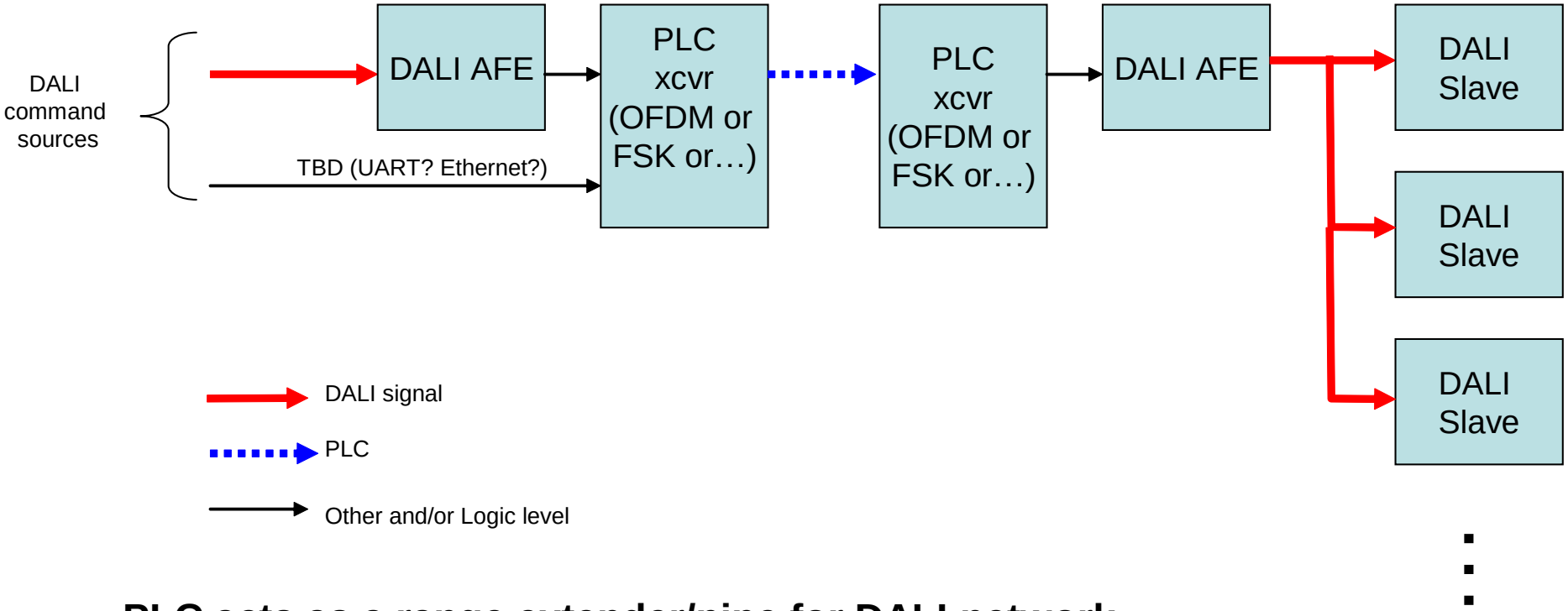

- **PLC acts as a range extender/pipe for DALI network**
- **PLC system inserted into existing networks**

PLC PHY Standards Compliance

Standard	Techno-logy	Band occupied	Data rate range	Target TI processor	TI status / availability
IEC 61334	SFSK	60–76 KHz	1.2–2.4 kbps	Piccolo™	**Now** (3rd party) 2Q10 (TI version)
PRIME	OFDM	42–90 kHz	21–128 kbps	F28xPLC	**Now** Multiple customers Field trials Interoperates
ERDF G3	OFDM	35–90 kHz	2.4–34 kbps	F28xPLC	1H 2010
Homeplug SE with Green PHY	OFDM	2–30 MHz 120–400 kHz	250 kbps – 3.8 Mbps	F28xPLC	Not Planned
Homeplug AV	OFDM	2–30 MHz	192 Mbps	NA	NA

- PRIME designed for low-voltage lines with low noise → targets higher data rates
- G3 designed for medium voltage lines → lower data rates, 802.15.4 like MAC
- Homeplug Smart Energy specification in progress
- SFSK easy to implement, estimating 10–15 MIPS

Software/communications/control

Software	MCU	Initial code dev platform	Certification/standard	Demo platform	Status/ Comments
DALI	C2000 MSP430	F2619	May ’09	TPS62660 bd w/ I/F card	Finalization stage, 2.2K Flash, 256 bytes RAM
DMX512	C2000 MSP430	F2012	Jun ‘09	TBD	Demo code and reference design available
PLC (SFSK)	C2000	Piccolo	N/A	TBD	
PLC (OFDM)	C2000	Piccolo	EN50065(Cenelec) IEC 6100-3	LED Streetlighting	Up to 76.8KBPS, 24-94.5kHz Released
LonTalk-like PLC lighting control	C2000	Piccolo	TBD	TBD	Project planning phase
6loWPAN	MSP430+ CC2520	F5438	Complete	E/O 1Q10	
802.15.4	MSP430	F541x/5x	802.15.4—complete	5438 experimenters board	
ZigBee	MSP430	F5438	ZigBee—complete	5438 experimenters board	Downloadable through TI website Home Automation—Lighitng Profile

DALI demo and eval platform

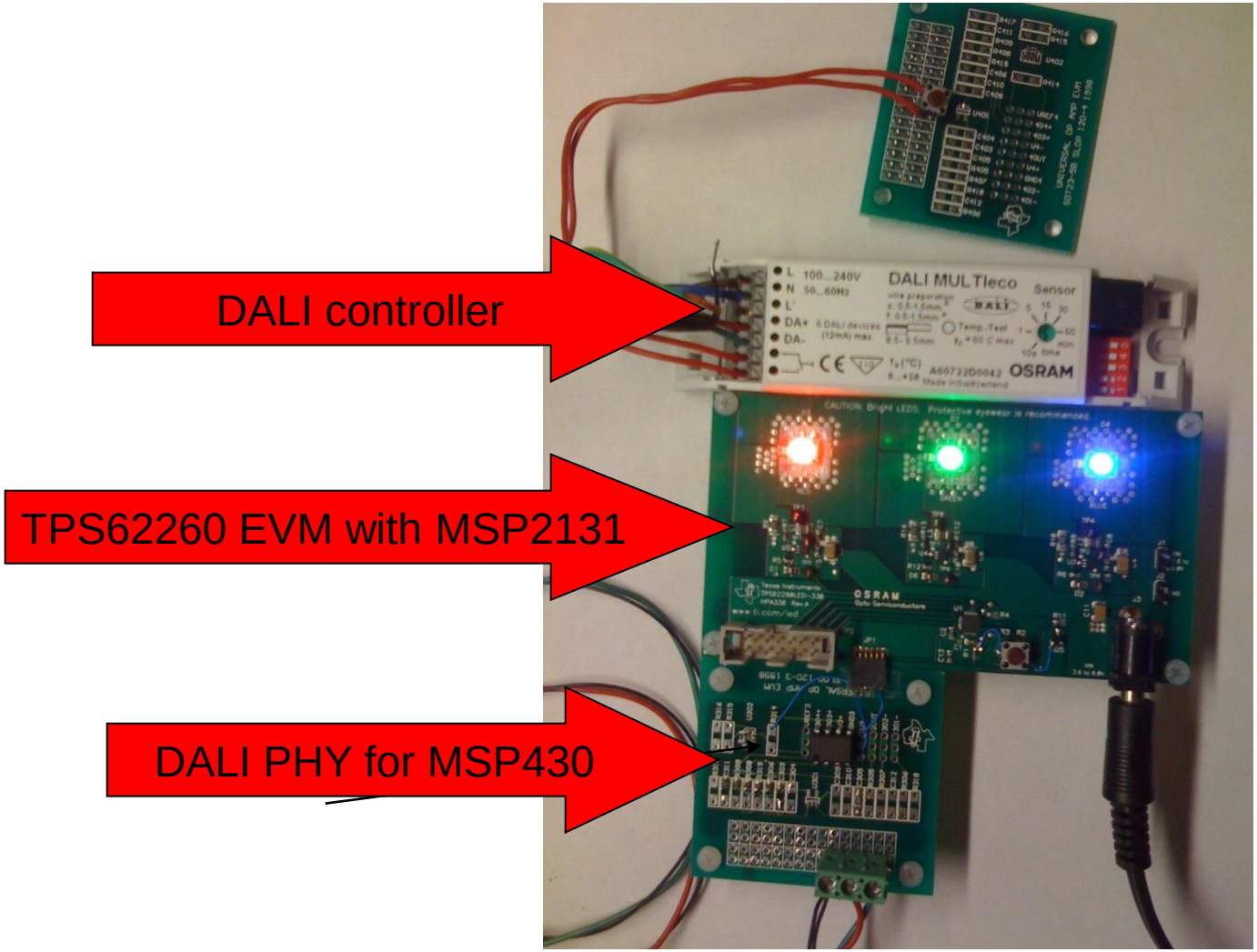

Future MCU-based lighting control

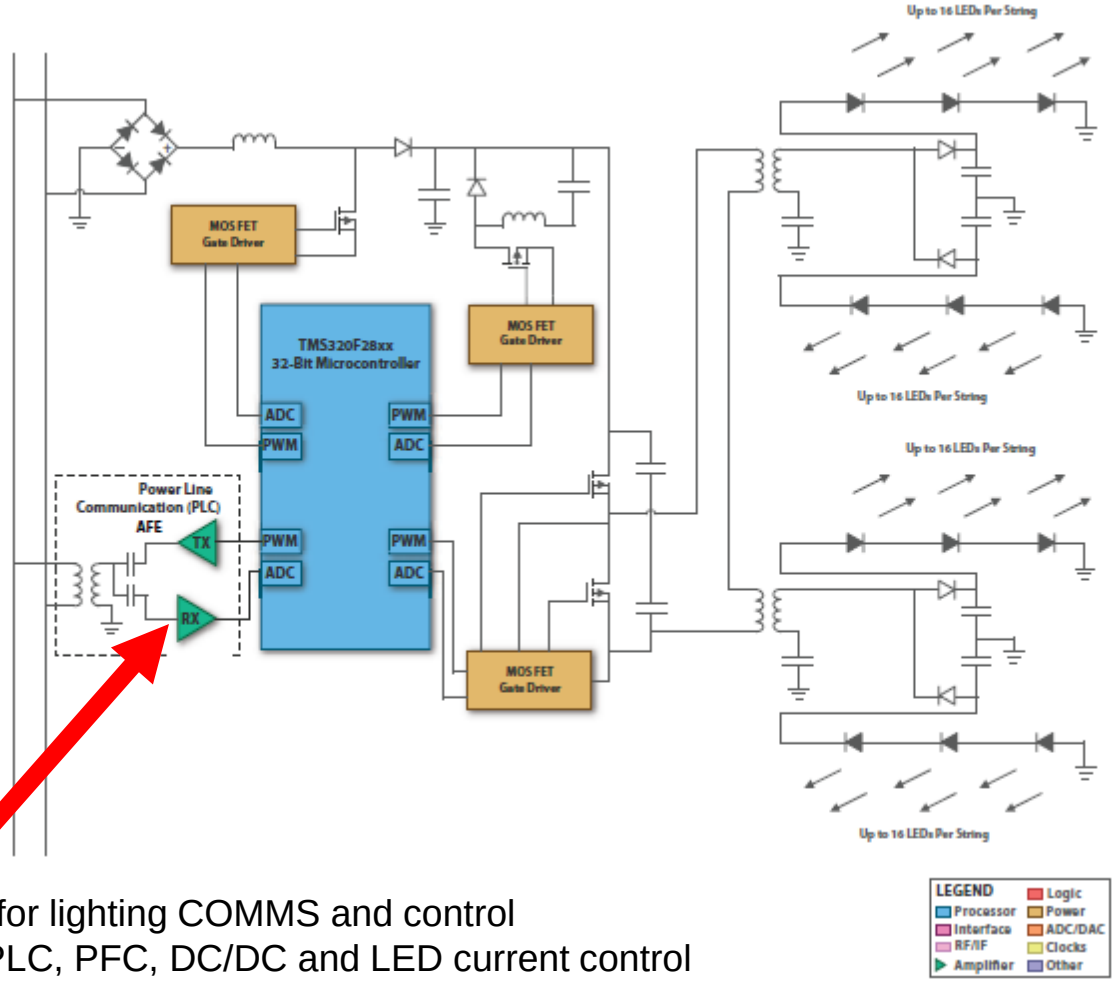

Single processor for lighting COMMS and control
MCU performs: PLC, PFC, DC/DC and LED current control

Note: Patent pending

S-FSK System-on-Module (SoM)

- Customer can either integrate the SoM in their PCB (schematics and BOM available), or
- Customer can purchase the SoM module and plug-it onto their meter
  - **SOM1A:** F2808 + [PGA112 + TAS5103], S-FSK and OFDM A Band
  - **SOM1B**: F2808 + [PGA112 + OPA564], S-FSK and OFDM A,B Band
  - **SOM2A:** F28027 + [PGA112 + TAS5103], S-FSK IEC 61334-5-1 PHY + MAC and IEC 61334-4-32 LLC DLMS/COSEM compliant
- Part number
  - ***TMDS2808SOM1A***
  - ***TMDS2808SOM1B***
  - ***TMDS28027SOM2A***
- Unit price $50 USD
- Volume quotations under request
- **Availability NOW**

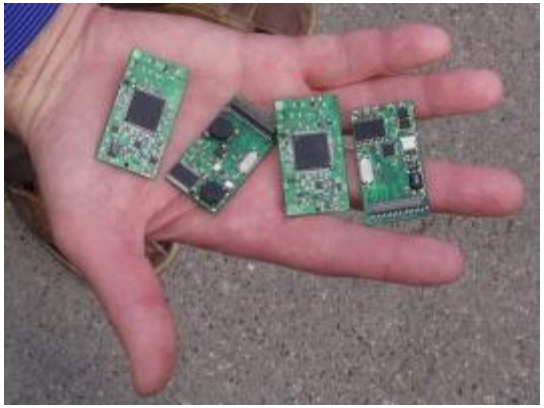

TI Narrowband OFDM Kit Development (PRIME/G3)

TI PLC-DP contains:

- 2 PLC modems
- Power supply and cables
- GUI and documentations
- Run any IP applications through PC host
- **Official kit available now**

- **Robust narrowband PLC modem over low-voltage/medium-voltage power line**
- **PLC standards:**
  - **PRIME**
  - **OFDM-light (on-going)**
  - **G3 (under evaluation)**
  - **S-FSK (under evaluation)**
  - **HPSE lower band (standard participation)**
- **Scalable data rates up to 128kbps for single phase**

- Software reference design package: **plcSUITE** APIs, libs, source codes
- AFE operating frequency range 9–500kHz (**usage of different filters**)
- Easy integration into end-point or network devices of AMR/AMI systems
- **NRE and royalties FREE**

How to get a PRIME Kit: send a request to o-monnier@ti.com

Default is API with libraries – source code available on a case-by-case basis

TI PLC Solution – Fully Programmable & Scalable

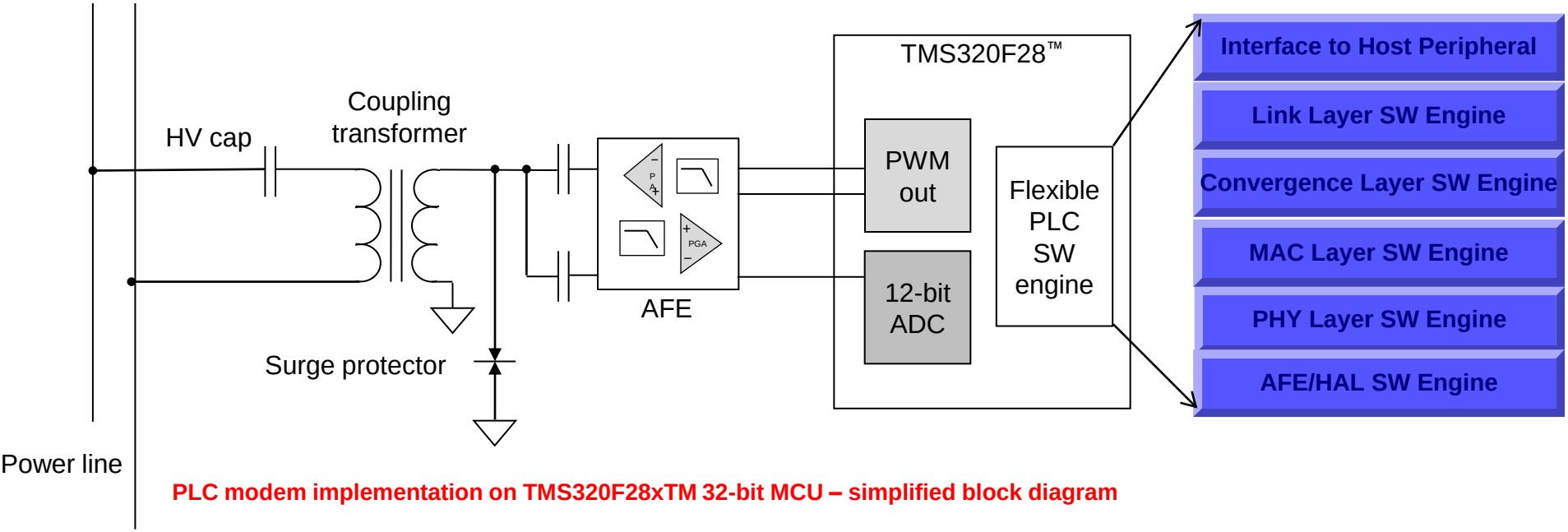

PLC modem implementation on TMS320F28xTM 32-bit MCU – simplified block diagram

- Flexibility is our CREDO !
- Dual chip solution based on optimized C2000 + Analog Front-End
- Fully programmable solution on single F28x (MAC & PHY)
- Support S-FSK – and Low Frequency Narrowband OFDM (LF NB OFDM) (PRIME – G3)
- Further improvements of the existing ‘standards’ are coming…

PRIME PHY + MAC Field Trials – Nov 2009

All 3 phases reached at 21kbps PHY rate, left running for a few hours

Only 1-2 phases reached intermittently

Current base node in MV→ LV substation

- Tested both single phase and 3-phase injection at one distribution transformer
- **PRIME Compatibility:** Automatic network configuration, node promotion, application-level data transfer
- **Network Size:** Up to 24 nodes in 8 metering rooms concurrently supported at some point

TI Power-Line Communication Summary

- Support for S-FSK for CENELEC A and B band

- TI is a strong supporter of OFDM narrowband solution
  - PRIME available today
  - G3
  - A/B/C/D bands, FCC and ARIB

- Roadmap and development on optimized solutions

Power for Metering

Moving from 110V/220V to point of load

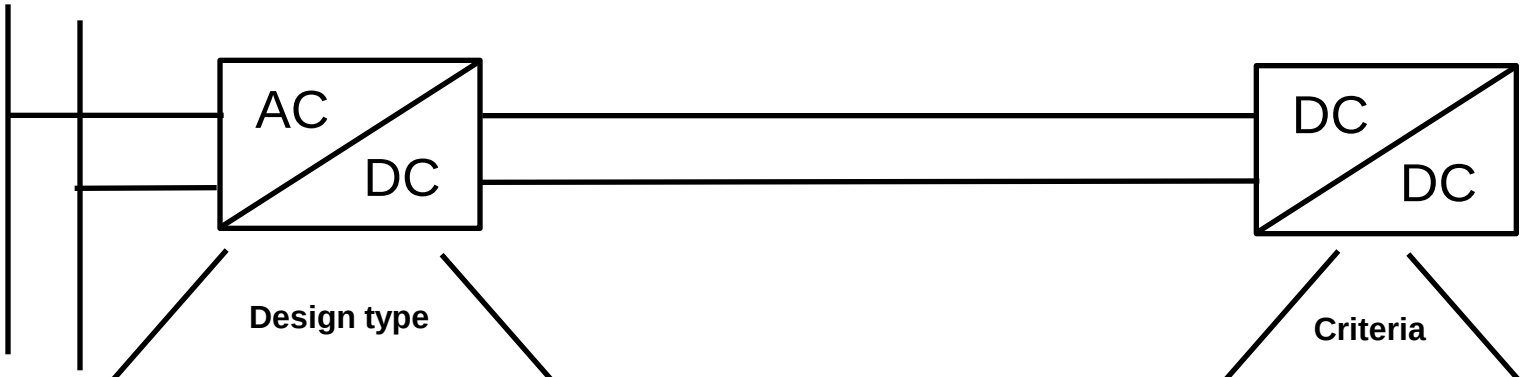

Design type

Criteria

Simple AMR Design (MSP430)

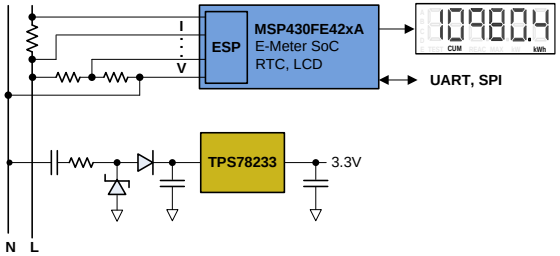

"Cap Drop Design"

Cheap and efficient enough

TPS78233 (150mA LDO, Fixed 3.3V out)

References: **SLYT345A**

Advanced AMI design (MCUs)

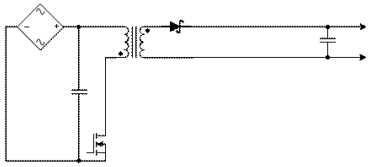

Typicall Fly-back topology

Switching Power supplies:
UCC28600/UCC28610

Efficiency

Switching

TPS6xx

Low Noise, Iq, Cost

Linear Regulators

TPS78x, TPS727..

<6V?

>6V?

Constraints:

- Reliability
- Power consumption
- Cost
- Complexity

- TI Solution Portfolio
  - Linear Regulators (LDO): **TPS78x**
  - Switching power supplies: **UCC28600, UCC28610, TPS6xx**
  - Power Module IC (PMIC)

Question to ask to qualify power needs

General:

- Power budget
- Number of voltage rails required?

AD/DC side

- Power rating
- Is isolation required for all outputs
- Target BOM cost for AC-DC conversion
- Efficiency target
- Current solution and possible issues (reliability, cost, performance etc)

Tools

TI Metering tools available today

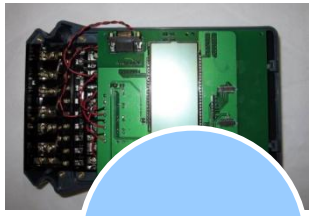

- 1-phase
- 3-phase

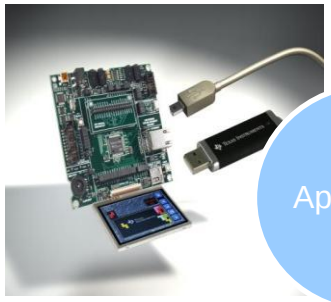

- Stellaris Cortex M3

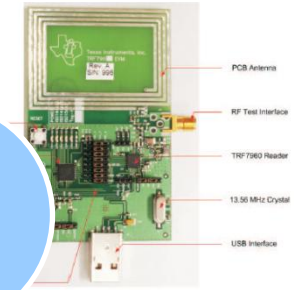

- Pre-payment

- Zigbee
- Sub 1Ghz
- WMbus

- S-FSK
- PRIME
- G3

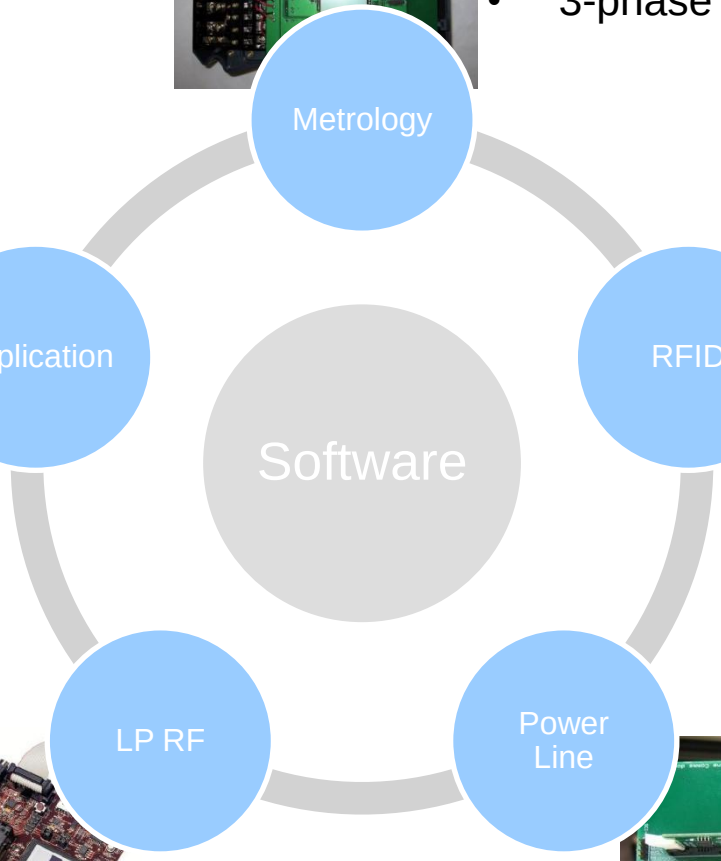

Smart Meter Board Demo Setup: two-ways communication

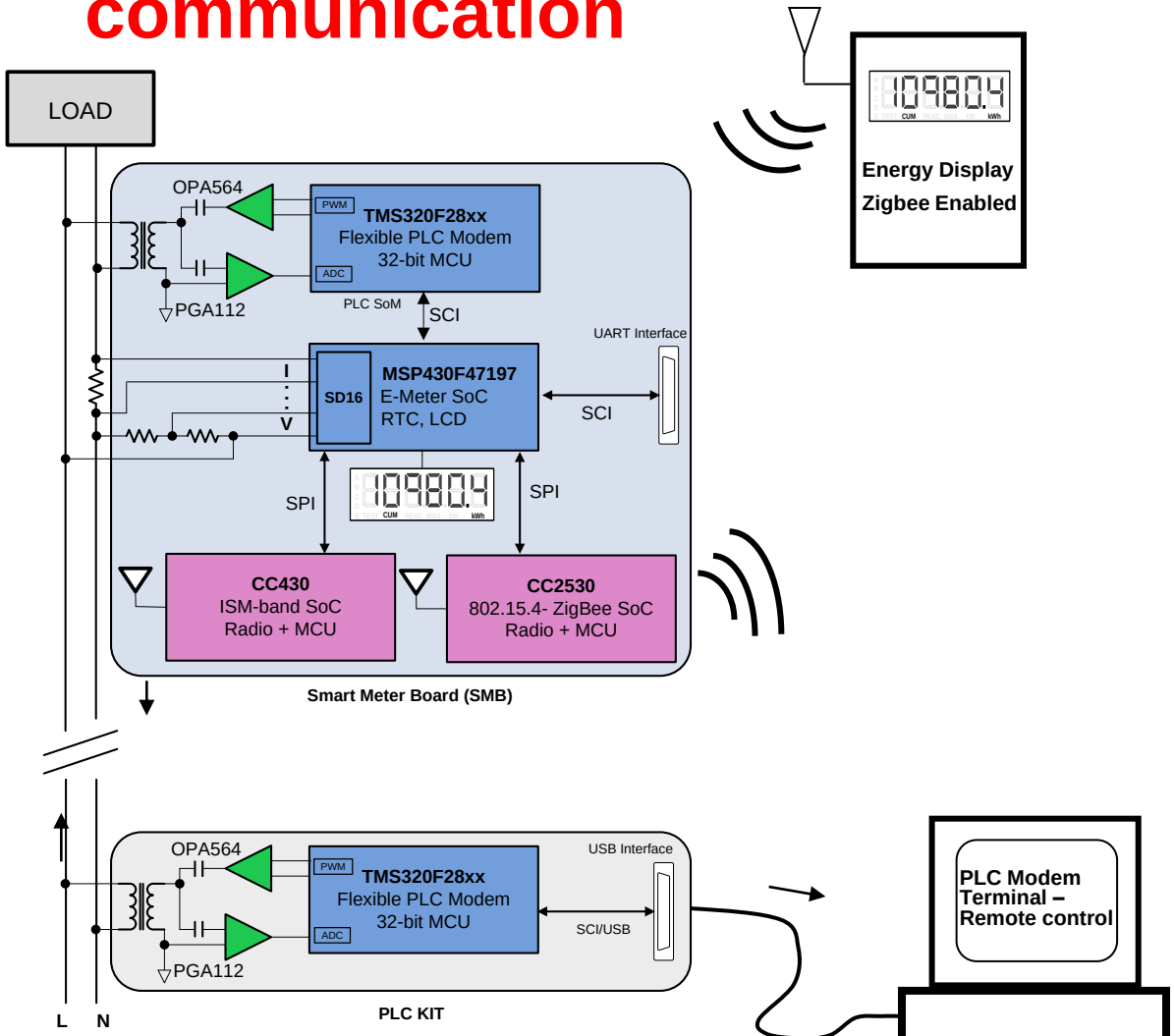

- PLC Modem is S-FSK only on SMB
- PRIME OFDM integrated by 3Q2010

From the meter to the outside world

- MSP430 measures energy
- Measurement information sent to wireless Display via the CC2530
- Measurement information sent to remote PLC modem terminal via Power Line with the 32-bit F28x MCU

From the outside world to the meter

- New configuration set-up sent to the meter via power-line (new tariff profile, new parameter..)
- Impact on measurement and visible change displayed on Energy Display

Future steps:

- Future communication upgrade with 900MHz CC430 options
- Load demand response

Available on request at metering@ti.com

Texas Instruments

Support Collaterals

TI Web

- TI metering navigation menu located at:

www.ti.com/metering

- Application Note
- Software/Code examples
- Reference design

- Videos (more to come) :
  - http://e2e.ti.com/media/p/51825.aspx

- Full details in the Metering System Solutions on ESP

- Contact metering@ti.com (Olivier Monnier & Emmanuel Sambuis)

Thank you!