TI Technology Days 2010

C2000™ real time microcontroller platform

Yunus Karaborek

Agenda

- TI Embedded Processing & C2000 Overview
- C2000 Roadmap and Target Applications
- Piccolo Series
  - Architectural Details (CLA, PWM, ADC, etc.)
  - Extension of Family
- Concerto Series
  - Adding Communication to C2000
- How to get started quickly
  - Hardware Tools (controlCard, dockingStation, etc.)
  - controlSUITE (libraries, drivers, etc.)
  - Development Environments
- Conclusion
  - Application focus with C2000

TI Embedded Processing Portfolio

TI Embedded Processors

Microcontrollers (MCUs)			ARM®-Based Processors		Digital Signal Processors (DSPs)		
16-bit ultra-low power MCUs	32-bit real-time MCUs	32-bit ARM Cortex™-M3 MCUs	ARM Cortex-A8 MPUs	DSP DSP+ARM	Multi-core DSP	Ultra Low power DSP	
MSP430™	**C2000™ Delfino™ Piccolo™**	**Stellaris®** ARM® Cortex™-M3	**Sitara™** ARM® Cortex™-A8 & ARM9	**C6000™ DaVinci™** video processors **OMAP™**	**C6000™**	**C5000™**	
Up to 25 MHz	40MHz to 300 MHz	Up to 100 MHz	300MHz to >1GHz	300MHz to >1Ghz +Accelerator	24.000 MMACS	Up to 300 MHz +Accelerator	
Flash 1 KB to 256 KB	Flash, RAM 16 KB to 512 KB	Flash 8 KB to 256 KB	Cache, RAM, ROM	Cache RAM, ROM	Cache RAM, ROM	Up to 320KB RAM Up to 128KB ROM	
Analog I/O, ADC LCD, USB, RF	PWM, ADC, CAN, SPI, I²C	USB, ENET MAC+PHY CAN, ADC, PWM, SPI	USB, CAN, PCIe, EMAC	USB, ENET, PCIe, SATA, SPI	SRIO, EMAC DMA, PCIe	USB, ADC McBSP, SPI, I²C	
Measurement, Sensing, General Purpose	Motor Control, Digital Power, Lighting, Ren. Enrgy	Connectivity, Security, Motion Control, HMI, Industrial Automation	Industrial computing, POS & portable data terminals	Floating/Fixed Point Video, Audio, Voice, Security, Conferencing	Telecom test & meas., media gateways, base stations	Audio, Voice Medical, Biometrics	
$0.25 to $9.00	$1.50 to $20.00	$1.00 to $8.00	$5.00 to $20.00	$5.00 to $200.00	$40 to $200.00	$3.00 to $10.00	

MPUs – Microprocessors

What is C2000?

The 32-bit real-time microcontroller family!

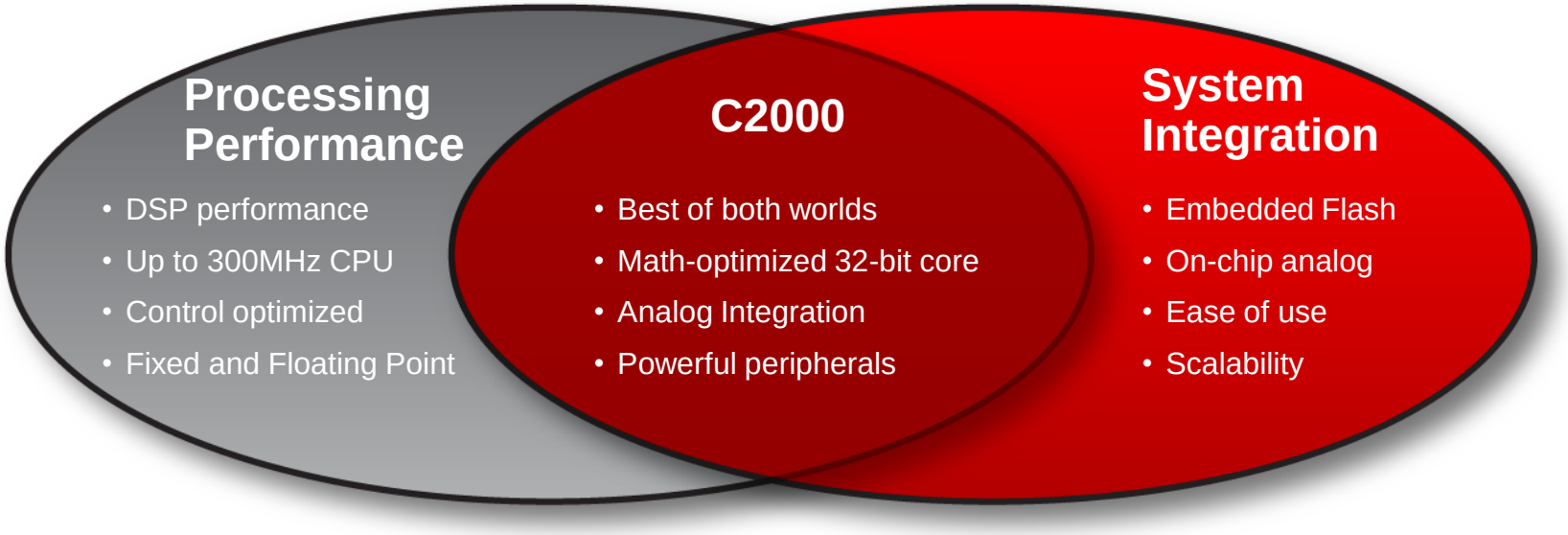

- **DSP performance within a Microcontroller architecture**
  - 40-300MHz C28x CPU
    - Built-in DSP functions
    - Single Cycle 32x32-bit MAC
  - Control Law Accelerator
  - Floating-Point Unit
  - Embedded Flash
- **Fine-tuned for real-time control**
  - Optimized core
  - Fast interrupts
  - Flexible interrupt system
  - Real-time debugging
- **Comprehensive Peripheral Set**
  - Best in class ADC performance
  - Flexible high resolution PWMs
  - Advanced Capture, Quadrature Encoder Interfaces
  - CAN, LIN, SPI, I2C, SCI/UART, McBSP
- **Broad portfolio of configurations**
  - 40-300 MHz
  - Fixed and Floating-point devices
  - 16-512KB of Flash
  - From sub $2 to $20
  - Software compatibility across C2000 family

C2000 Sample Applications

Renewable Energy

Solar Power Inverters

Wind Power Inverters

Digital Motor Control

White Goods

Industrial Drives & Motion Control

Power Tools

E-bike

Digital Power

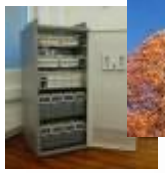

Telecom / Server AC/DC Rectifiers

Uninterruptable Power Supplies

DC/DC Converters

C2000

Lighting

LED Street Lighting

Auto HID

LED TV Backlighting

Automotive

Hybrid Electric Vehicles

Electric Power Steering

Radar / Collision Avoidance

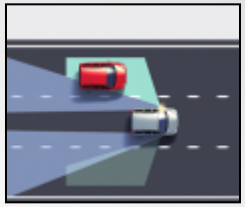

Precision Sensing & Control

Power Line Communication

RFID Readers

Laser Ranging

Medical Oxygen Concentrators

Optical Networking

Efficiency in real-time control systems

Where we are today

Control Law Accelerator

brings parallel processing performance with direct access to on-chip control peripherals and no CPU intervention needed –

nothing similar available from competition

12-bit Analog to Digital Converter

the industry's fastest and most flexible with speeds up to 4.6MSPS and dual sample and hold –

most competitors operate up to 1MSPS and require 2xADCs for dual sample and hold

Flexible PWM with High Resolution **gives duty and phase resolution up to 150ps –**

closest competitor is 1ns

Integrated System Robustness

supporting I/O Glitch Protection, Triple Clock Redundancy and direct H/W PWM Trip Mechanism, automotive qualified –

most competitors require extensive external circuitry and cannot support up to 125^{0}C

32-bit Performance-Rich CPU

provides DSP class performance up to 300MHz including a 32x32MAC with a 64-bit result in single cycle –

many competitors require multiple cycles resulting in lower performance

Comprehensive Software Package

including royalty-free peripheral, signal processing, IQ Math, motor control, and digital power libraries plus complete system examples –

no competitor has as broad a spectrum of software

Working on the future…

Additional Analog Integration

-Programmable Gain Amplifier
-Op Amp
-12-bit DAC
-16-bit ADC
-Delta-Sigma Demodulator
-And more…

Lower Active and Idle Power

-Power domains
-10uA RTC mode w/ 32kHZ OSC
-<50mA active power
-Lower power ADC

Control Peripheral Improvements

-High resolution PWM channels
-HRCAP
-PWM improvements
-Improved ADC latency
-I/Os with programmable slew rate control
-High Speed Encoder and Fieldbus

Enhanced System Robustness

-Safety standards

Software – Expansion of controlSUITE

-Complete system libraries (DMC, digital power)
-Floating point, CLA, fixed point libraries
-Easy-to-use

Performance & Cost Improvements

C2000 32-bit MCU Roadmap (NDA)

MIPS

300

150

100

80

60

40

Performance & Memory

F2823x

F281x

F280x

F2801x

Production

Sampling

Development

Future

Concerto™
(128-256 Pins)

Floating Pt
Dual Core
Host+Control

AUP $7-$15

F28M36x — USB OTG, EMAC, CAN — 2012

F28M35x — USB OTG, EMAC, CAN — 1Q'11

High End Drives

E-Metering (PLC)

Power Analysis

Delfino™
(176-256 Pins)

Floating Pt
Performance

AUP $8-$16

C2834x — CAN

F2833x — CAN

High End Drives

High End Solar Power

Auto Radar

Piccolo™
(38-100 Pins)

Floating Pt
Low Cost

AUP $5-$8

F2806x — USB Device, CAN — 4Q'10

Low End Drives

E-Metering (PLC)

UPS

Fixed Pt w/
Co-Processor
Options

AUP $2-$5

F2805x — USB Device, CAN — 4Q'10

F2803x — CAN

Low Cost Motion Control

AC/DC

Lighting & PLC

Fixed Pt
Low Cost

AUP $2
AUP $1

F2802x

FR2804x — 3Q'11

Low Cost Motor Control

DC/DC

EV

100+ Code Compatible Devices

Piccolo Series Details

existing families & outlook

Unique combination of performance and integration for real-time control

High-performance C28x CPU

- Up to 60MHz performance
- Single cycle 32-bit MAC
- Fast interrupt response and minimal latency

Control Law Accelerator

- 32-bit floating point math accelerator
- Operates independent of C28x CPU
- Up to 5X performance boost

Piccolo

C28x 32-bit CPU

Up to 60 MHz
32x32-bit Multiplier
RMW Atomic ALU

Control Law Accelerator (CLA)

Memory

- 16-128 KB Flash
- 6-20 KB RAM
- Boot ROM

Debug

- Real-Time JTAG

Power & Clocking

- **Dual Osc 10 MHz**
- **On-Chip Osc**
- Dynamic PLL Ratio Changes

Power-on Reset
Brown Out Reset

Peripherals

- **3x Comparator**
- Missing Clock Detection Circuitry
- 128-Bit Security Key/Lock

Converter

- 16 ch, 12-bit A/D Converter

Serial Interfaces

- 2x SPI
- 1x SCI
- 1x I^2C
- 1x LIN
- 1x CAN

Timer Modules

- **7x ePWM Modules:** 14x PWM outputs (7x 150ps high-res)
- 1 x 32-bit eCAP
- 1 x 32-bit eQEP
- Watchdog Timer
- 3x 32-bit CPU Timers

Connectivity

- 22 I/Os

Enhanced Architecture

- High accuracy on-chip oscillators (10MHz)
- Single 3.3V supply with BOR/POR supervision

Intelligent Peripherals

- 150ps resolution on PWM frequency & duty cycle
- 12-bit ratio-metric ADC with individual channel triggers
- Up to 3x analog comparators with 10-bit reference

30+ configurations bring a wide range of performance, package, and memory

***Available on "Piccolo" F2803x series**

Note: See detailed block diagram for device variations

C28x Compared to ARM Cortex-M3

C28x	Cortex-M3
32-bit Proprietary C28x Core	32-bit Industry Standard ARM Cortex-M3
Up to 300 MHz	Up to 100 MHz
8-stage pipeline	3-stage pipeline
32/16-bit Instructions	32/16-bit Instructions (Thumb2)
32x32 MAC = 64-bit Single Cycle	32x32 MAC = 32-bit Single Cycle
Control Lite (PID) 50% Better	General Purpose (Dhrystone) 25% Better
Control Heavy (Buck) 400% Better	Best Code Density & Deterministic Interrupts

C28x
The Right Solution for Real-Time Control

- Best CPU for Precision Math/Control
- Fixed & Floating Point
- Control Law Accelerator
- Broadest Offering
  - 40 to 300 MHz
  - 38 to 256 Pins
  - $1.85 to $16 1Ku

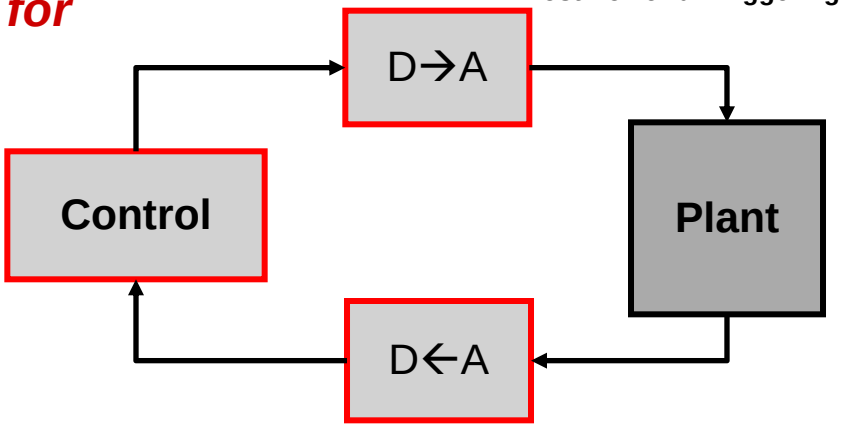

- Highest Resolution
- Modular Flexibility for any Plant Topology
- Most Powerful Triggering & Synchronization

- Highest Speed
- Best Resolution
- Lowest Latency
- Most Flexible Triggering & Synchronization

What is the Control Law Accelerator (CLA)?

Independent 32-bit floating-point math accelerator

Operates independently of the C28x CPU

- Independent register set, memory bus structure & processing unit
- Low interrupt response time

Direct access to on-chip peripherals

- Execution of algorithms in parallel with the C28x CPU

Fully programmable: IEEE 32-bit floating

- Removes scaling and saturation burden

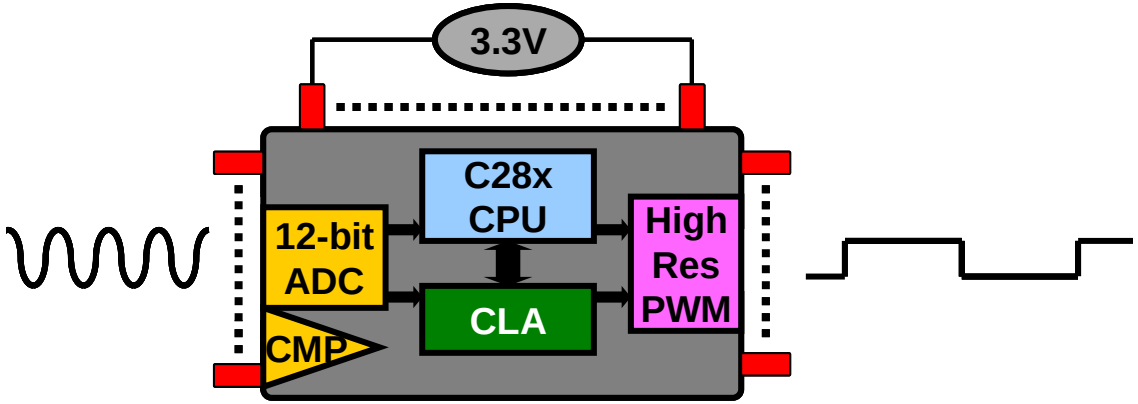

Reduced Sample-To-Output Delay

Faster System Response & Higher MHz Control Loops

Improved Support For Multi-Channel (Phase/Freq) Loops

Digital Power Applications

Improved System Robustness

Automotive, White-goods

Free-Up C28x CPU For Other Tasks (communication, diagnostics)

General Purpose MCU Applications

CLA Libraries – Available under ControlSUITE™ during 2Q10

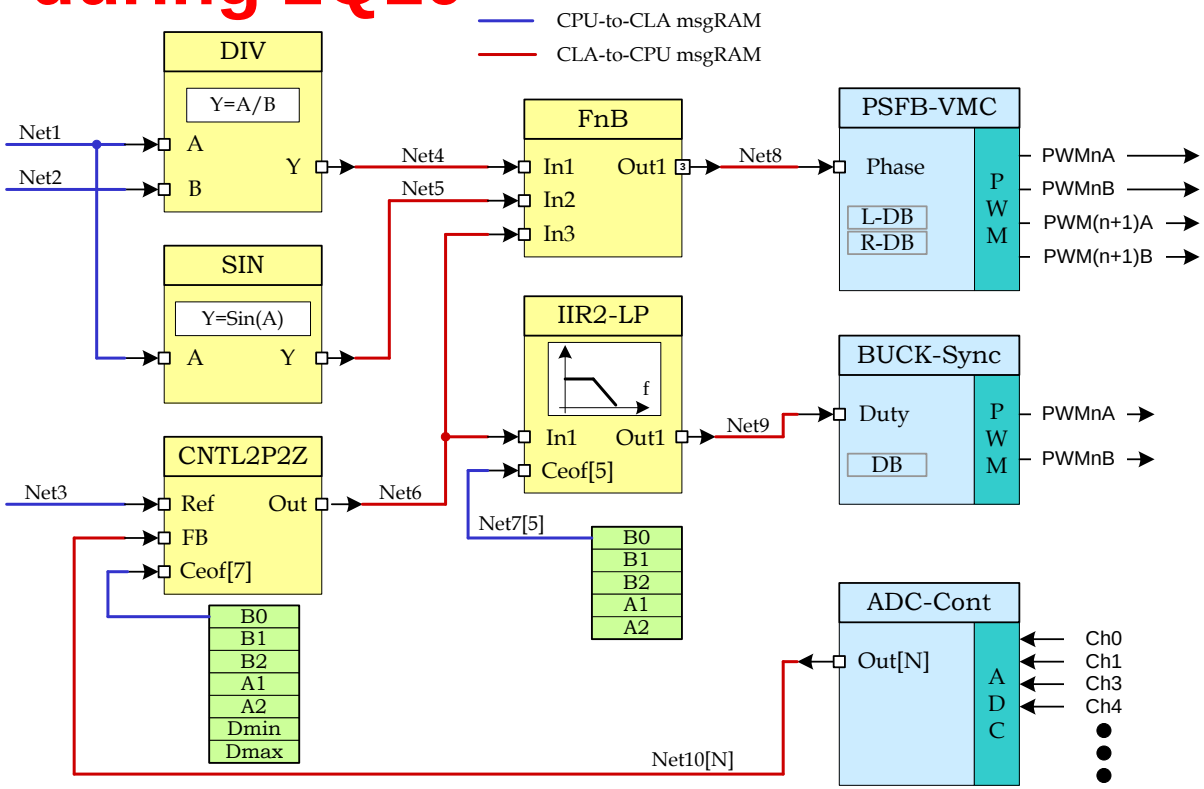


```
// DIV block connections
DIV_A=&Net1;
DIV_B=&Net2;
DIV_Y=&Net4;

// SIN block connections
SIN_A=&Net1;
SIN_Y=&Net5;

// CNTL2P2Z block connections
CNTL2P2Z_Ref=&Net3;
CNTL2P2Z_FB=&Net10[0];
CNTL2P2Z_Coef=&Net?[0];
CNTL2P2Z_Out=&Net6;

etc ......
```

```
// "Terminal" (pointer) declaration
Int *DIV_A, *DIV_B, *DIV_Y
Int *SIN_A, SIN_Y
Int *CNTL2P2Z_Ref, *CNTL2P2Z_FB, *CNTL2P2Z_Out, *CNTL2P2Z_Coef
Int *IIR2LPF_In, *IIR2LPF_Out, *IIR2LPF_Coef
Int *PSFB_VMC_Phase, *BUCK_Sync_Duty, *ADC_Cont_Out

// Net declarations
Int  Net1, Net2, Net3, Net4, Net5, ....
Int  Net7[5], Net10[N], ......
```

```
; CLA Macro Calls
ADC_Cont
DIV
SIN
CNTL2P2Z
FnB
IIR2LPF
PSFB_VMC
BUCK_SYNC
```

Clocking System - Piccolo

Piccolo's clocking system provides two zero-pin on-chip oscillators to eliminate the need for external clock circuitry. The high accuracy, high speed internal clocks are also a part of an extensive clock protection system

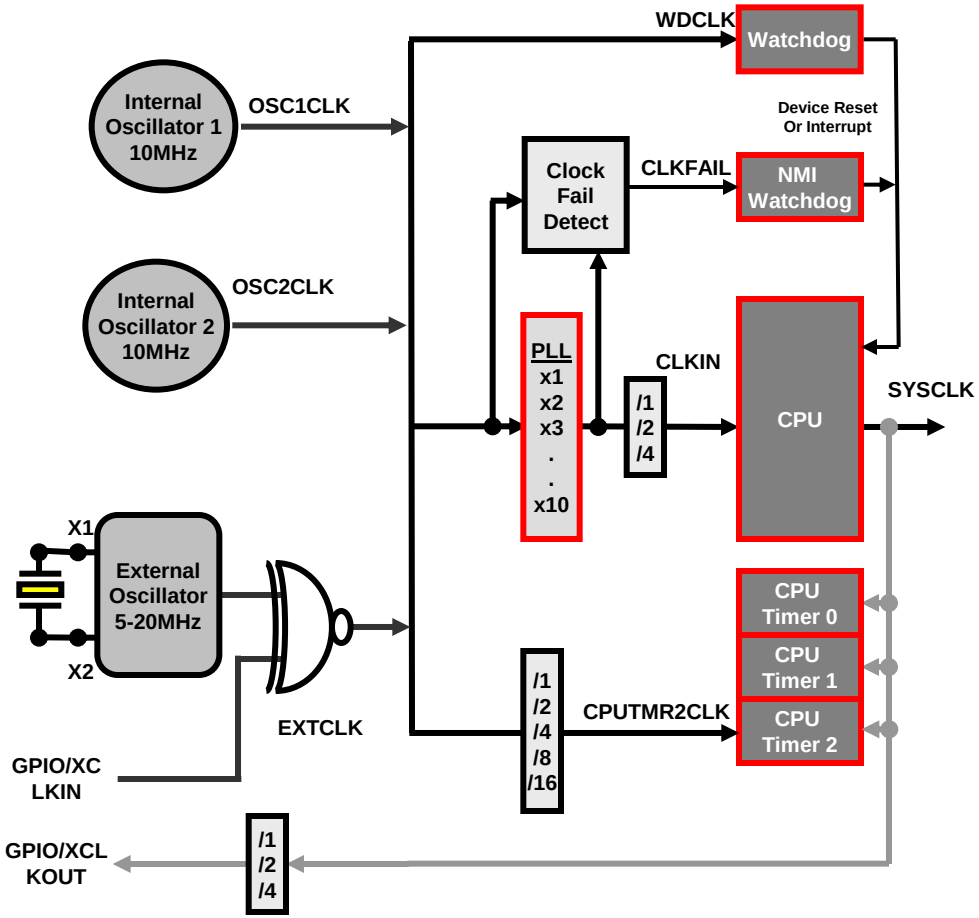

Lower System Cost

- No external clock circuitry or crystal required
- Includes secondary internal oscillator for backup or alternate clock source

Increased System Reliability

- Back-up internal oscillator automatically triggered in case of error
- Configurable clock sources allows independent CPU, CPU Timer 2 and Watchdog clocks
- Watchdog support standards such as IEC-60730
- Automatic PWM trip in case of clock failure

3-tier Clock Protection

- If clock failure is detected, CLKIN and WDCLK automatically switches to backup oscillator
- Two internal high-speed oscillators
- If both internal clocks fail, PLL clock automatically goes into "limp mode" to facilitate shut-down procedures. (5 MHz only)

Internal Oscillator Accuracy
~3% (85C to 125C)

Texas Instruments

Enhanced PWM (ePWM)

Each ePWM module has two independently configurable outputs, EPWMxA and EPWMxB, as illustrated below:

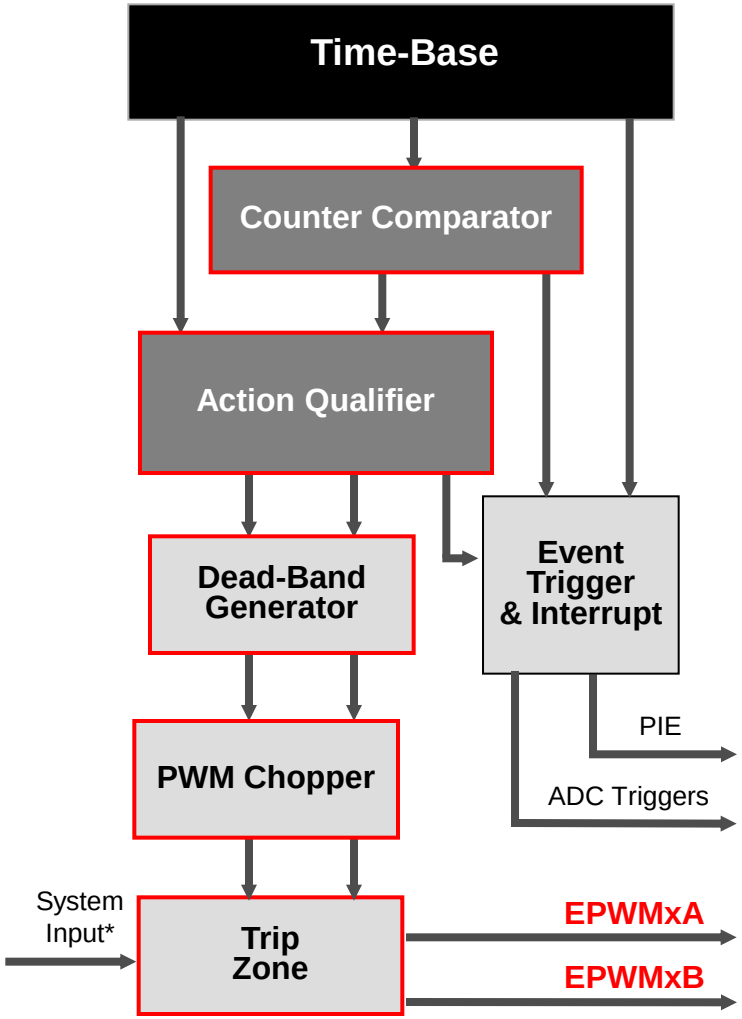

Dedicated 16-bit Time Base

- Uses prescaled CPU system clock.
- Synchronizes with other ePWM Modules in phase shift and frequency

Counter Comparator (CC)

- Registers and comparators eliminate the need to interrupt the CPU in PWM generation
- Can function as a 16-bit input capture (rising edge only)

Action Qualifier

- Generates actual PWM signal with information from CC and timer.

Programmable Dead-Band Generator

- Programmable rising-edge and falling-edge delay

PWM Chopper

- Allows a high-frequency carrier signal to modulate PWM waveforms
- Programmable chopping frequency, duty cycle, and first pulse width

Programmable Trip Zone Generator

- Quickly overrides PWM signals to a pre-programmed state.
- One-shot or cycle-by-cycle operation
- Can generate events, filtered events, or trip conditions

Event Trigger and Interrupt

- Two ADC start-of-conversion signals and a PIE interrupt request line

*Piccolo only

PWM Trip Zones

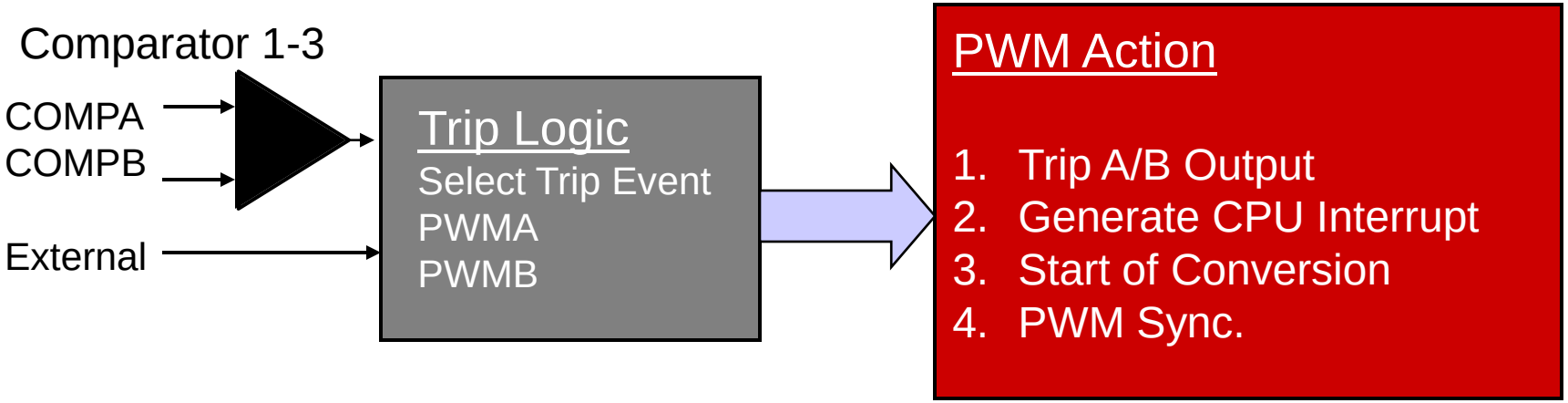

- Trip Zones operate even if the clocks go missing!
- Each trip pin/event can map to any combination of PWM outputs, Interrupt, SOC, or PWM Synchronization
- Trip event can be synchronous or asynchronous
- User can block trip action for a given offset and window after start of PWM period
- Automatically records counter value in case of trip
- One Shot (Fault) or Continuous (Cycle By Cycle Control)

High Resolution PWM

C2834x HRPWM Effective Resolution (at 300MHz)

PWM (kHz)	Standard PWM		HR-PWM	
	bits	%	bits	%
50	12.6	0.02	18.3	0.000
100	11.6	0.03	17.3	0.001
250	10.2	0.09	16.0	0.002
500	9.2	0.17	15.0	0.003
1000	8.2	0.34	14.0	0.006
2000	7.2	0.68	13.0	0.012

Piccolo HRPWM Effective Resolution (at 60MHz)

PWM (kHz)	Standard PWM		HR-PWM	
	bits	%	bits	%
50	10.2	0.08	17.0	0.000
100	9.2	0.17	16.0	0.002
250	7.9	0.42	14.7	0.004
500	6.9	0.83	13.7	0.008
1000	5.9	1.67	12.7	0.015
2000	4.9	3.33	11.7	0.030

High Resolution PWM output

- Based on micro edge positioner (MEP) technology, which finely positions an edge by subdividing the PWM clock
- Allows high resolution control of both duty cycle and phase
- Piccolo adds high resolution period control
- Finer edge positioning control
- Self-check diagnostics
- Step size down to 65ps for Delfino C2834x
- Most useful for high frequency PWM requirements of power conversion topologies such as:
  - Single-phase buck, boost, and flyback
  - Multi-phase buck, boost, and flyback
  - Phase-shifted full bridge
  - Direct modulation of D-Class power amplifiers

ePWM Use Cases

ePWM Count Up Asymmetric Waveform with Independent Modulation on EPWMA/B

• Zero/Period set high, Comparator A controls ePWMA while Comparator B controls ePWMB

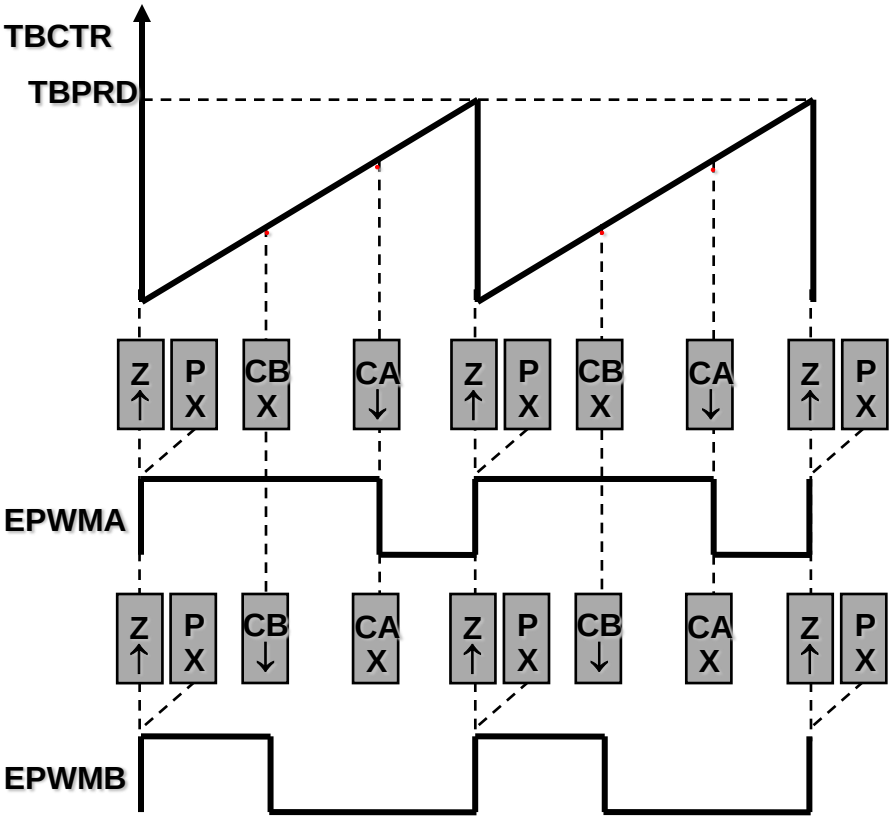

ePWM Count Up-Down Symmetric Waveform with Independent Modulation on EPWMA

• Zero and Max controls ePWMB, Comparators A and B control ePWMA

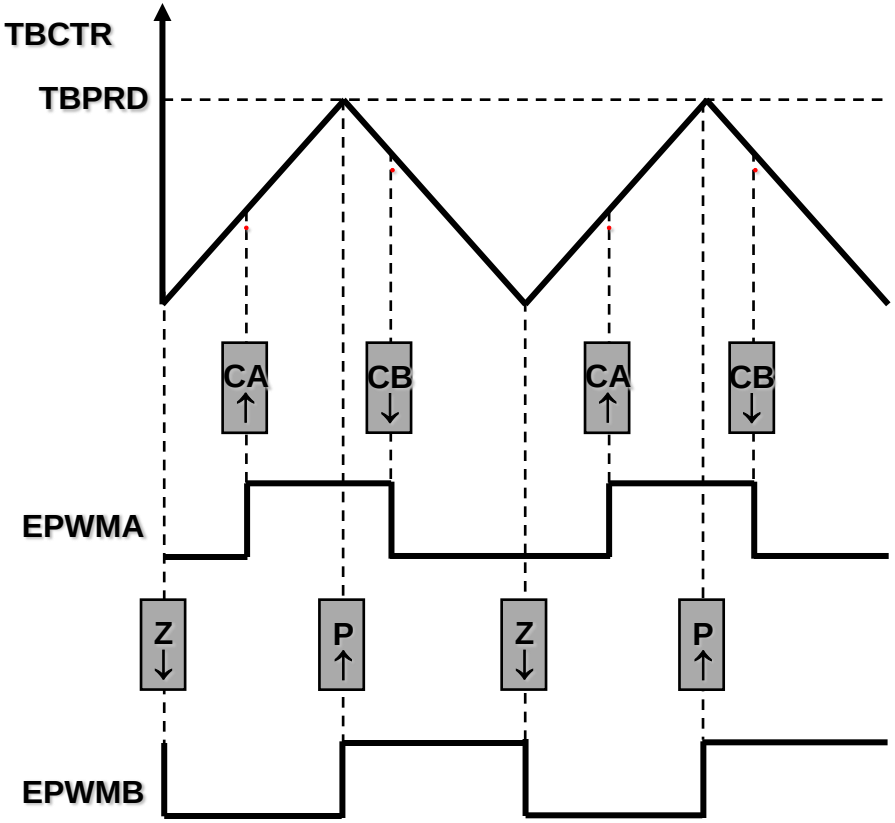

Texas Instruments

12-bit Pipeline/SAR Hybrid ADC

Piccolo's hybrid ADC allows even more flexible creation of conversion sequences.

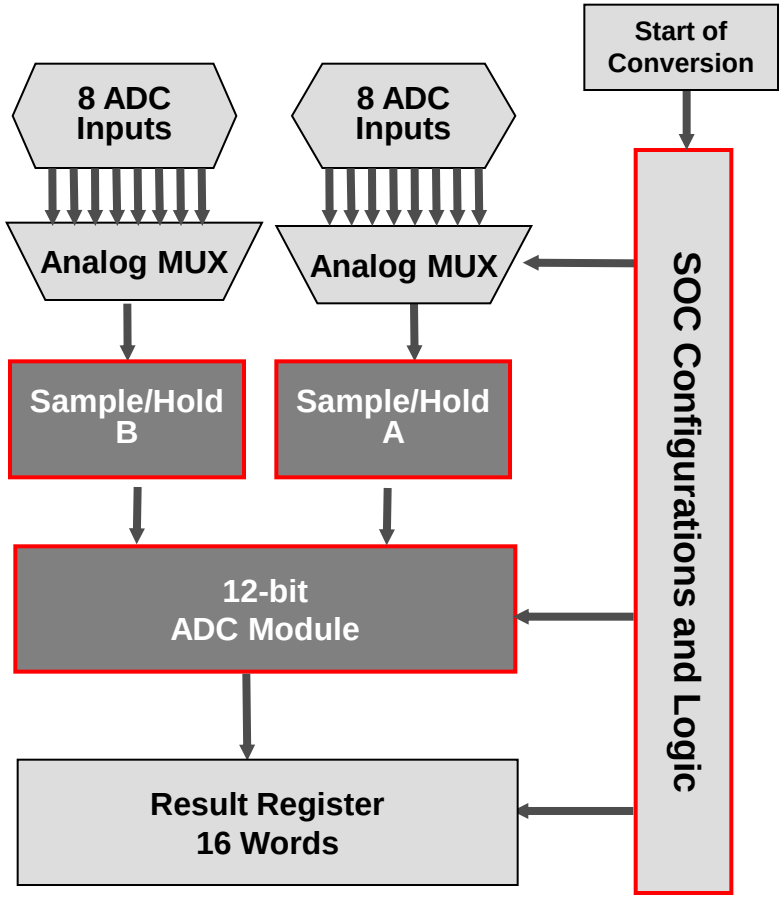

Start of Conversion (SOC) Configuration and Logic Block

- 16 SOC triggers from Software, CPU timers, ePWMs, and GPIOs
- Allows easy creation of conversion sequences
- Multiple conversions can be processed in Round Robin or Priority Modes
- **9 flexible interrupts**

Up to 16 Analog Inputs

- 16 channel, multiplexed analog inputs.
- **Supports both 0-3.3V fixed range and ratio-metric input range**

Analog Mux

- Uses SOC input to select which channels will be processed

Dual Sample and Hold

- Dual sample/hold enable simultaneous sampling or sequencing sampling modes
- **Adjustable acquisition window ensures proper sampling**

12-bit Analog-Digital Converter

- Fast conversion rate: Up to 217ns, 4.6 MSPS
- **Just-in-time interrupts (early interrupts) eliminates context switch latency by calling interrupts before conversion finishes**

Result Registers

- Sixteen result registers (individually addressable) to store conversion values

Input Capture (eCAP)

Advanced capture can record up to four different events (useful for applications such as remote control signal capture). Can also function as a PWM output

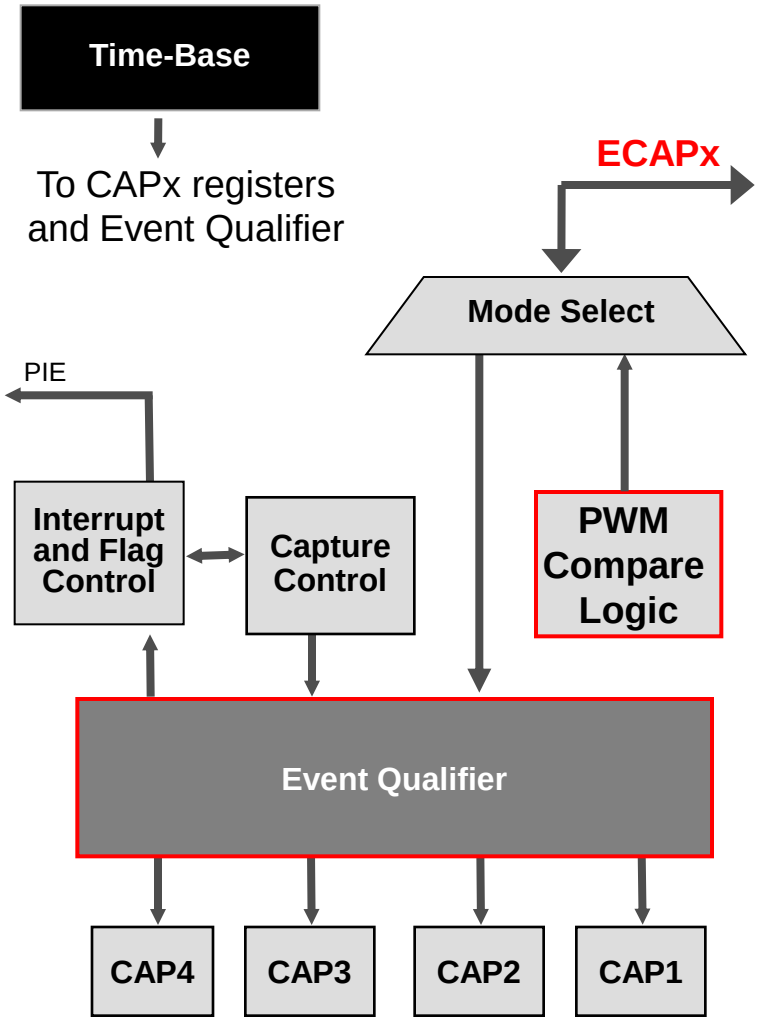

Dedicated 32-bit Time Base

- Uses prescaled CPU system clock.
- Phase register allows synchronization with other counters
- Event Qualifier can reset the counter on any of the four event loads

Mode Select

- Enables ECAPx pin as a input capture or PWM output

Event Qualifier

- Records event time stamps in absolute or delta modes

Capture Control

- Tells Event Qualifier which CAPx register to store data
- Controls input capture in one-shot or continuous modes

32-bit CAP1-4 Registers

- Four independent registers, one for each event
- In PWM mode, two can be used as shadow registers

Interrupt and Flag Control

- 7 different events can be configured to trigger an interrupt

PWM Output

- Timer-based PWM output option
- Regular PWM with shadow loading

Texas Instruments

Quadrature Encoder Pulse Module (eQEP)

QEP modules take in feedback signals from a motor to determine position and/or speed

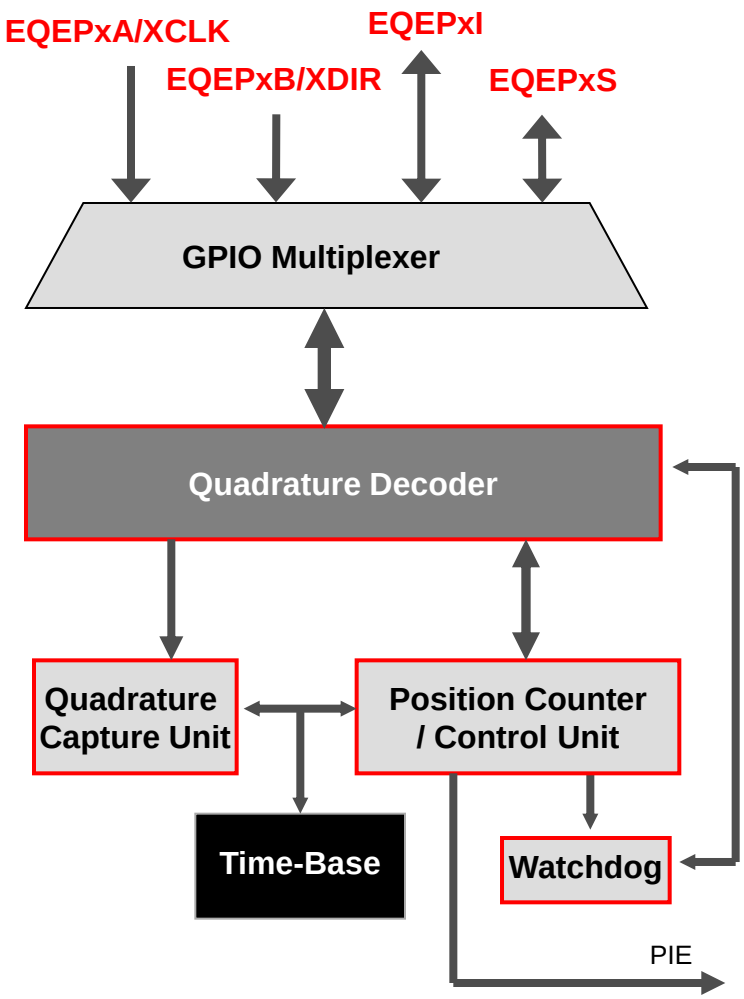

Four QEP input signals

- eQEPA/B signals used to derive direction and quadrature-clock when they are not provided
- Index signal indicates one whole revolution
- Strobe input can be connected to an outside sensor to receive notifications about position (such as end-of-line on a typewriter)

Quadrature Decoder Unit

- Generates direction and clock for the position counter
- Four modes for different inputs and measurements

Position Counter / Control Unit

- Keeps track of motor position in four different manners
- Records event time stamps in absolute or delta modes
- Pulse stretcher increases event pulse duration to ensure proper timing

Quadrature Capture Unit

- Integrated edge capture unit for low speed measurement

Unit Timer Base

- 32-bit timer to generate periodic interrupts for velocity calculations

QEP Watchdog

- Monitors quadrature-clock to indicate proper operation of the motion-control system.

Texas Instruments

Comparators

Analog Comparators on Piccolo devices bring instant protection

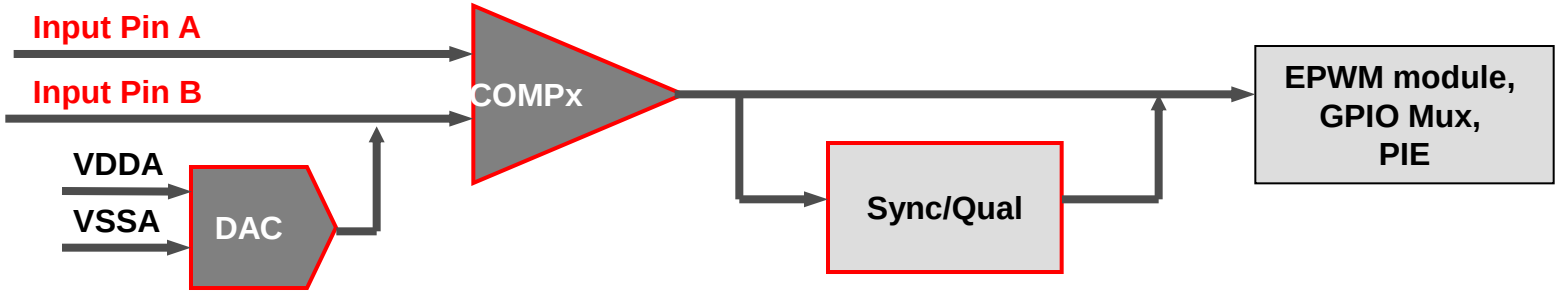

10-bit DAC

- Analog DAC can provide input to comparator

Analog Comparator

- True analog voltage comparator in VDDA domain
- 30ns response time to PWM Trip Zone

Sync/Qualification

- Comparator output can be passed directly or synchronized with the system clock
- Qualification logic can delay output for multiple clock cycles

EPWM and GPIO Mux Outputs

- Output can be routed to ePWM Trip Zone Module as well as GPIO output

Comparator Reference Guide

Piccolo: F2802x, F2803x – spruge5

Devices	Difference
Piccolo: F2802x, F2803x	Original Comparators

Texas Instruments

Piccolo A & B Series: >80 Devices

TMS320	MHz	Flash (KB)	RAM (KB)	VREG (POR /BOR)	CLA	Analog Comp.	12-bit ADC Chan.	PWM (HRPWM) Outputs	Capture Inputs	QEP	Comm Ports	Package / Temp	SRP (1Ku)
F280200	40	16	6	Yes	-	1/2	7/13 (2 MSPS)	8+1* (0)	0	-	SPI, SCI, I^2C	TSSOP-38/ LQFP-48 -40^{0}C to 105^{0}C	$1.85-$1.89
F28020	40	32	6	Yes	-	1/2	7/13 (2 MSPS)	8+1* (0)	1	-	SPI, SCI, I^2C	TSSOP-38/ LQFP-48 -40^{0}C to 105^{0}C	$1.99-$2.10
F28021	40	64	10	Yes	-	1/2	7/13 (2 MSPS)	8+1* (0)	1	-	SPI, SCI, I^2C	TSSOP-38/ LQFP-48 -40^{0}C to 105^{0}C	$2.20-$2.30
F28022	40	32	12	Yes	-	1/2	7/13 (3 MSPS)	8+1* (4)	1	-	SPI, SCI, I^2C	TSSOP-38/ LQFP-48 -40^{0}C to105^{0}C/125^{0}C	$2.25-$2.76
F28023	40	64	12	Yes	-	1/2	7/13 (3 MSPS)	8+1* (4)	1	-	SPI, SCI, I^2C	TSSOP-38/ LQFP-48 -40^{0}C to105^{0}C/125^{0}C	$2.45-$3.00
F28026	60	32	12	Yes	-	1/2	7/13 (4.6 MSPS)	8+1* (4)	1	-	SPI, SCI, I^2C	TSSOP-38/ LQFP-48 -40^{0}C to105^{0}C/125^{0}C	$2.65-$3.24
F28027	60	64	12	Yes	-	1/2	7/13 (4.6 MSPS)	8+1* (4)	1	-	SPI, SCI, I^2C	TSSOP-38/ LQFP-48 -40^{0}C to105^{0}C/125^{0}C	$2.85-$3.47
F28030	60	32	12	Yes	-	3	14/16 (2MSPS)	12+1* (0)/ 14+1* (0)	1	1	1/2 SPI, SCI, LIN, I^2C, CAN	TQFP-64/LQFP-80 -40^{0}C to 105^{0}C/125^{0}C	$2.79-$3.67
F28031	60	64	16	Yes	-	3	14/16 (2MSPS)	12+1* (0)/ 14+1* (0)	1	1	1/2 SPI, SCI, LIN, I^2C, CAN	TQFP-64/LQFP-80 -40^{0}C to 105^{0}C/125^{0}C	$2.97-$3.91
F28032	60	64	20	Yes	-	3	14/16 (4.6MSPS)	12+1* (6)/ 14+1* (7)	1	1	1/2 SPI, SCI, LIN, I^2C, CAN	TQFP-64/LQFP-80 -40^{0}C to 105^{0}C/125^{0}C	$3.49-$4.44
F28034	60	128	20	Yes	-	3	14/16 (4.6MSPS)	12+1* (6)/ 14+1* (7)	1	1	1/2 SPI, SCI, LIN, I^2C, CAN	TQFP-64/LQFP-80 -40^{0}C to 105^{0}C/125^{0}C	$3.75-$4.77
F28033	60	64	20	Yes	Yes	3	14/16 (4.6MSPS)	12+1* (6)/ 14+1* (7)	1	1	1/2 SPI, SCI, LIN, I^2C, CAN	TQFP-64/LQFP-80 -40^{0}C to 105^{0}C/125^{0}C	$4.11-$5.22
F28035	60	128	20	Yes	Yes	3	14/16 (4.6MSPS)	12+1* (6)/ 14+1* (7)	1	1	1/2 SPI, SCI, LIN, I^2C, CAN	TQFP-64/LQFP-80 -40^{0}C to 105^{0}C/125^{0}C	$4.41-$5.62

Piccolo Series Extension

Ferro & Octave

Piccolo Family in 2010

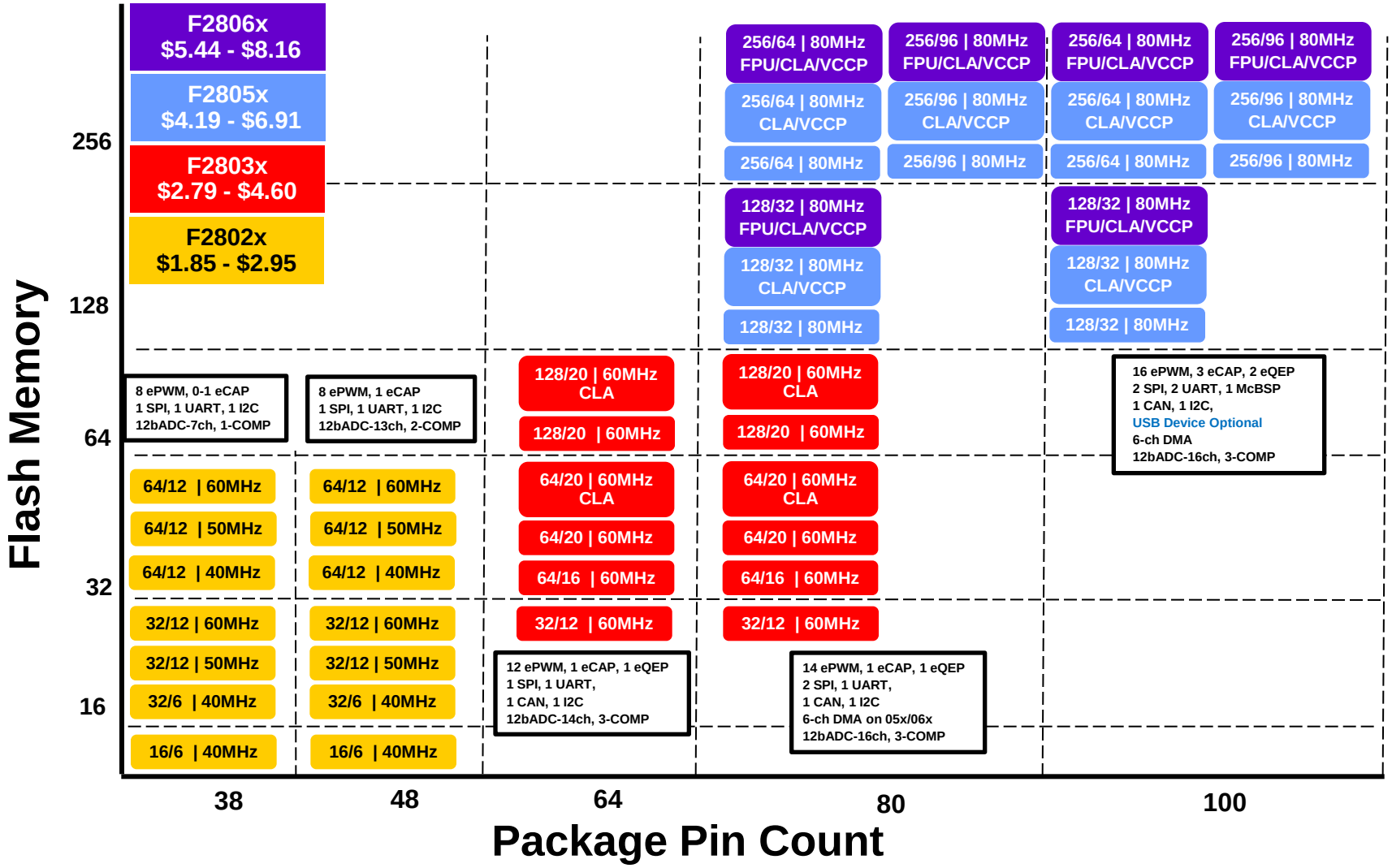

Texas Instruments

Piccolo: Real-time control in an MCU package and price

Leading 32-bit performance for real-time control

- High-performance C28x CPU
- Intelligent peripherals optimized for control applications
- Control Law Accelerator
- Viterbi, CRC and Complex arithmetic co-processor
- Native Floating Point

Lower System Cost & Ease of Use

- Best mix of control peripherals
- Robust software libraries
- Code compatibility across C2000 platform ranging from 40MHz to 300MHz
- Increased on-chip analog integration

MCU Package & Price

- Starting at $1.85 1ku
- Package options from 38 to 100-pins
- Bringing real-time control to cost sensitive applications

Piccolo

C28x 32-bit CPU
Up to 80 MHz
32x32-bit Multiplier
RMW Atomic ALU

FPU

Control Law Accelerator (CLA)

VCCP Accelerator

Memory
- 16-256 KB Flash
- 6-96 KB RAM
- Boot ROM

Debug
- Real-Time JTAG

Power & Clocking
- Dual Osc 10 MHz
- On-Chip Osc
- Dynamic PLL Ratio
- Changes
- Power-on Reset
- Brown Out Reset

Direct Memory Access

Peripherals
- 3x Comparator
- Missing Clock Detection Circuitry
- 128-Bit Security Key/Lock

Converter
- 16 ch, 12-bit A/D Converter

Serial Interfaces
- 2x SPI
- 1x SCI
- 1x I^2C
- 1x LIN
- 1x CAN
- 1x USB Device

Timer Modules
- 8x ePWM Modules: 19x PWM outputs (8x 150ps high-res)
- 3 x 32-bit eCAP
- 2 x 32-bit eQEP
- Watchdog Timer
- 3x 32-bit CPU Timers

Connectivity
- 60 I/Os

38-pin TSSOP 0.65mm pitch | **48-pin LQFP** 0.5mm pitch | **64-pin LQFP** 0.5mm pitch | **80-pin LQFP** 0.5mm pitch | **100-pin LQFP** 0.5mm pitch

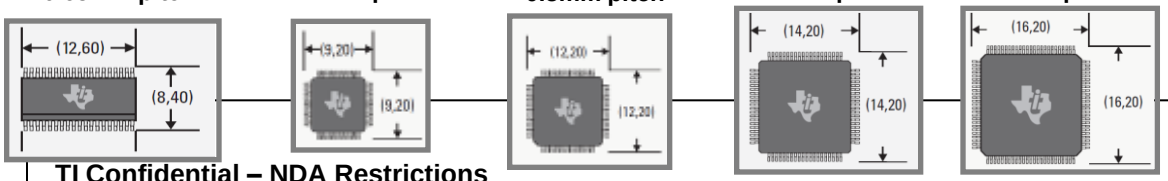

-40 to 105C/125C and Q100

TI Confidential – NDA Restrictions

Texas Instruments

F2805/-06x – New *Piccolo* Series

Performance
- 80 MHz C28x 32-bit CPU
- Control Law Hardware Accelerator
- VCCP (Viterbi, CRC, arithmetic coprocessor)
- Full software compatibility with previous generations
- 6 Ch DMA

Features
- Core
  - C28x 32-bit CPU
    - Single cycle 32-bit MAC
  - 80MHz Performance
  - Control Law Hardware Accelerator
- Memory
  - Flash: 128, 256 KB
  - RAM: 32, 64, 96 KB
- Highlights
  - Single 3.3V supply
  - High accuracy on-chip oscillators (10MHz)
  - Three analog comparators with 10-bit reference
  - 150ps resolution on PWM frequency
  - 12-bit ratio-metric ADC
  - 2 x Quadrature Encoder Pulse (eQEP) Unit
  - CAN 2.0B up to 16 mailboxes
  - USB 2.0 Device
  - Packages: 80-pin LQFP, 100-pin LQFP

Markets: Power Line Modem, Automotive Radar, UPS, Motion and Drives

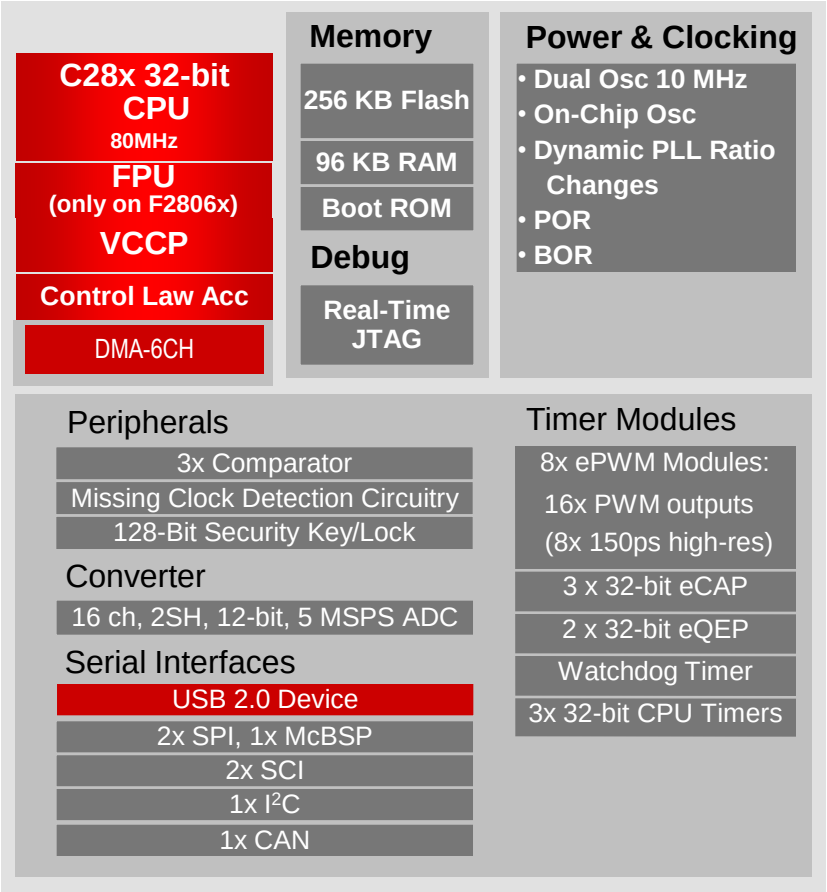

80, 100 QFP, 105C/125C and Q100

VCCP Module
(Viterbi, CRC and Complex arithmetic co-Processor)

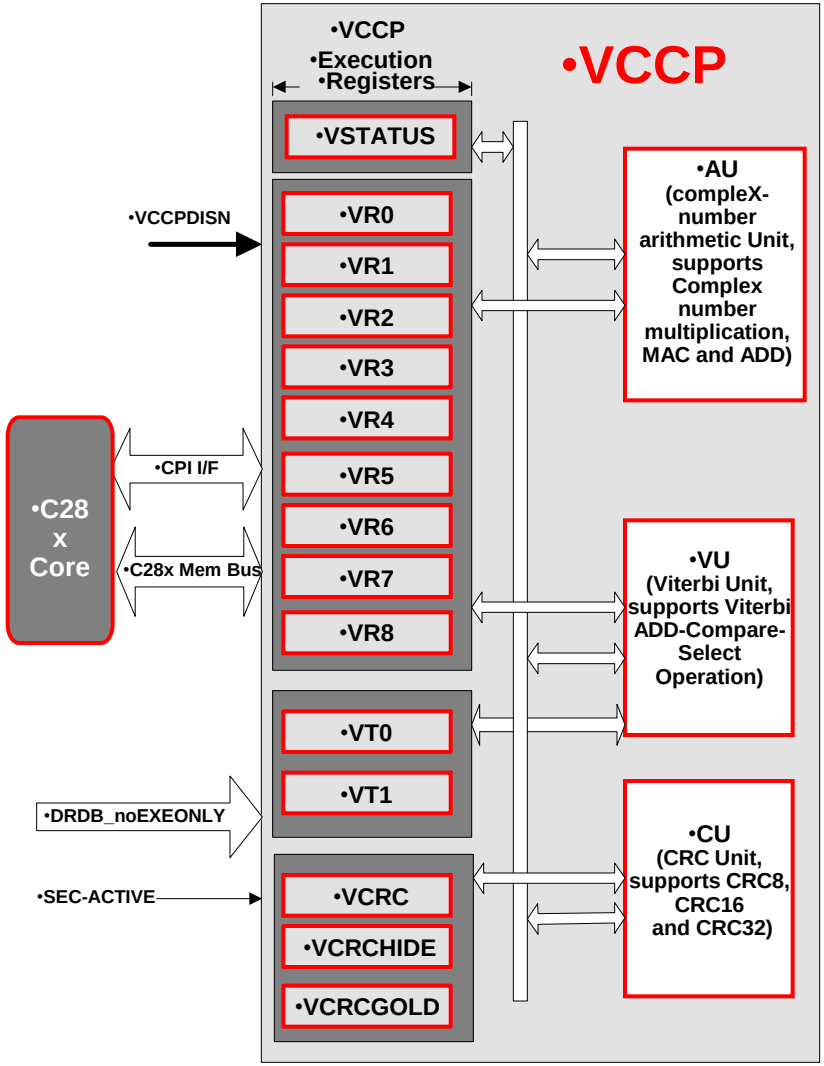

CRC Unit (CU)

- Supports generation of CRC8, CRC16 and CRC32 on data stored in memory
  - Byte-wise calculation to support PRIME

Viterbi Unit (VU)

- Supports efficient SW implementation of Viterbi decoder by performing the ADD-Compare-Select and trace back operation in hardware
  - 1 cycle branch metrics initialization for CR=1/2 and 2 cycle branch metrics initialization for CR=1/3
  - 2-cycle Viterbi butterfly operation (Viterbi Butterfly SW on F28335 takes 15 cycles)
  - 3-cycle Viterbi traceback operation per Viterbi stage (Traceback SW on F28335 takes 15 cycles)

Arithmetic Unit (AU)

- Supports complex number arithmetic and FFT calculation
  - 2 cycle complex-number multiplication with 16-bit x16-bit = 32-bit real and imaginary parts
  - 1 cycle complex-number addition
  - 2-cycle Complex multiply-and-accumulate (MAC)
  - A repeat Complex-MAC operation
  - Instruction to support 5-cycle 16-bit FFT butterfly

FRAM

Ferroelectric RAM - new memory technology that combines the speed of RAM with the data retention of Flash

Ferroelectric Crystal

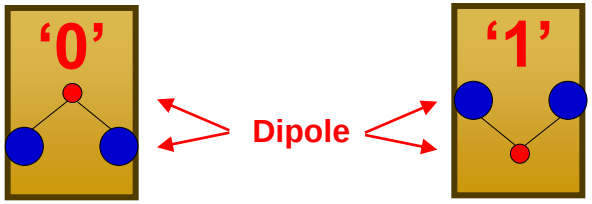

	FRAM	EEPROM	Flash
Time to write 64 bytes to memory	1.6 µs	2,200 µs	6,400 µs
Time to read 64 bytes from memory	1.6 µs	4.5 µs	4.5 µs
Number of write cycles	100 trillion	500,000	100,000
Voltage needed to write	1.5 V	10 to 14 V	10 to 14 V
Manufacturing cycle time	–	>3×	3×
Resistance to gamma radiation	Yes	No	No

Universal Memory

- Can be used as cache (RAM), data or program
- Unparalleled Flexibility for developers
- Fast time to market & inventory efficiency
- High write endurance

Unique Attributes

- **Non-Volatile** – retains data without power
- Fast Write / Update
  - RAM like performance. Up to ~ 50ns/byte access times today (> **1000x** faster than Flash/EEPROM)
- Low Power
  - Needs 1.**5V** to write compared to > 10-14V for Flash/EEPROM □ no charge pump
- Superior Data Reliability
  - '**Write Guarantee**' in case of power loss and > 100 Trillion read/write cycles

Proven and Reliable Technology

- Excellent reliability & data retention characteristics (>10 years at 85ºC)
- Superior write endurance (>10^{14} cycles)
- Radiation resistant & inherently secure memory technology

TI Confidential – NDA Restrictions

FR2804x – New *Piccolo* Series

Markets: AC-DC Rectifier, DC-DC, Micro Inverters, Low Cost DMC

New FRAM Technology brings new possibilities

- Non-volatile
- 1000x faster write than Flash
- 100 trillion write cycles endurance
- Higher inherent security

Leading 32-bit performance for real-time control

- High-performance C28x CPU
- Intelligent peripherals optimized for control applications
- Control Law Accelerator
- Best mix of control peripherals

MCU Package, Price, and Ease of Use

- Starting at $1 (in volume)
- Down to 5x5mm package
- Robust software libraries
- Code compatibility across C2000 platform ranging from 40MHz to 300MHz

FR2804x

C28x 32-bit CPU

Up to 60 MHz
32x32-bit Multiplier
RMW Atomic ALU

Control Law Accelerator (CLA)

Memory

32 KB FRAM
16 KB SRAM
Boot ROM

Debug

Real-Time JTAG

Power & Clocking

- **Dual Osc 10 MHz**
- **On-Chip Osc**
- Dynamic PLL Ratio Changes

Power-on Reset
Brown Out Reset

Peripherals

3x Comparator
Missing Clock Detection Circuitry
128-Bit Security Key/Lock

Converter

10 ch, 12-bit, 5/1 MSPS ADC with 2 S&H

Serial Interfaces

1x SPI
2x SCI
1x I^2C

Timer Modules

8x HRPWM outputs
2x ePWM outputs
1x std PWM output
3x Capture (1x HR)
Watchdog Timer
3x 32-bit CPU Timers

48 LQFP, 64 LQFP (32 LQFP after launch)
105C

Concerto
Adding Communication to C2000

The best of two worlds

New C2000 Dual Core: Concerto™

Host MCU
ARM Cortex-M3

Ecosystem of Developers

- –Operating Systems
- –Middleware
- –Software Infrastructure

Robust Communication

- –Ethernet
- –USB
- –CAN
- –Serial
- –Wireless
- –Fieldbus Support

+

Real-Time Control
F28x w/ FPU

Precision Control

- –Industry Leading Computational Performance
- –New Accelerator HW
- –Flexible Precision PWMs
- –Lowest Latency
- –Robust Control SW Support
- –High Speed Precision Analog
- –Fine-tuned Control Architecture
- –Integration with leading meta language tools

Concerto Family: New System Architectures

FIELDBUS
(ENET, CAN, SERIAL)

Controller

Real-Time Interrupt Priority
Fast Closed Loops
Small Sampling Windows
Background task for host functions
Sub-Prioritization of host functions

Interrupt

Classic MCU

- Compromise between ideal host and control capability
- Complex tasking / prioritization
- Still appropriate for deeply embedded systems

FIELDBUS
(ENET, CAN, SERIAL)

Host Controller

Communications
Logic/Profile
Sequencing/Monitoring

Interrupt

Loop Controller

Real-Time Control
Faster /More Loops
Small Sampling Windows

Two Chip

- Additional complexity
- Dual developments plus interface challenges / latency
- Necessary solution depending on isolation boundary trade-offs

FIELDBUS
(ENET, CAN, SERIAL)

Host Subsystem

Communications
Logic/Profile
Sequencing/Monitoring

Interrupt

Control Subsystem

Real-Time Control
Faster /More Loops
Small Sampling Windows

Concerto

- Independent subsystems on a single device
- Optimized capability
- Single platform for development
- No compromises

F28M35x – First Series in *Concerto*

- **Multiple Performance Options**
  - 60, 100, 150 MHz C28x Floating Point
  - 60, 75, 100 MHz Cortex-M3 CPU
- **Large Internal Memory**
  - 512kB to 1MB Embedded Flash
  - 72kB to 132kB Embedded SRAM
  - ECC, Parity, and HW BIST
- **Robust Communications**
  - 10/100 Ethernet MAC with 1588
  - USB 2.0 OTG w/ integrated PHY
  - CAN
  - Multiple SPI, UART, I^2C
  - 8/16/32-bit External Memory Interface
- **Flexible Control Peripherals**
  - Enhanced PWMs w/ High Resolution Feature and flexible fault management
  - 32-bit Capture & Quadrature Encoder Interfaces
  - Two high-speed 12-bit ADCs each with 2S/H
  - Analog Comparators w/ Internal DAC Reference
- **128/144-pin PowerPad QFP**
- **Industrial and Automotive Temp**
  - -40 to 105^0C, -40 to 125^0C (AEC Q100)
- **Functional Safety Documentation**

Markets: *Advanced Metering, Automotive EPS, Motion Control & Drives, UPS, Renewable Energy, Power & Protection, Medical Process Control, Smart Sensors*

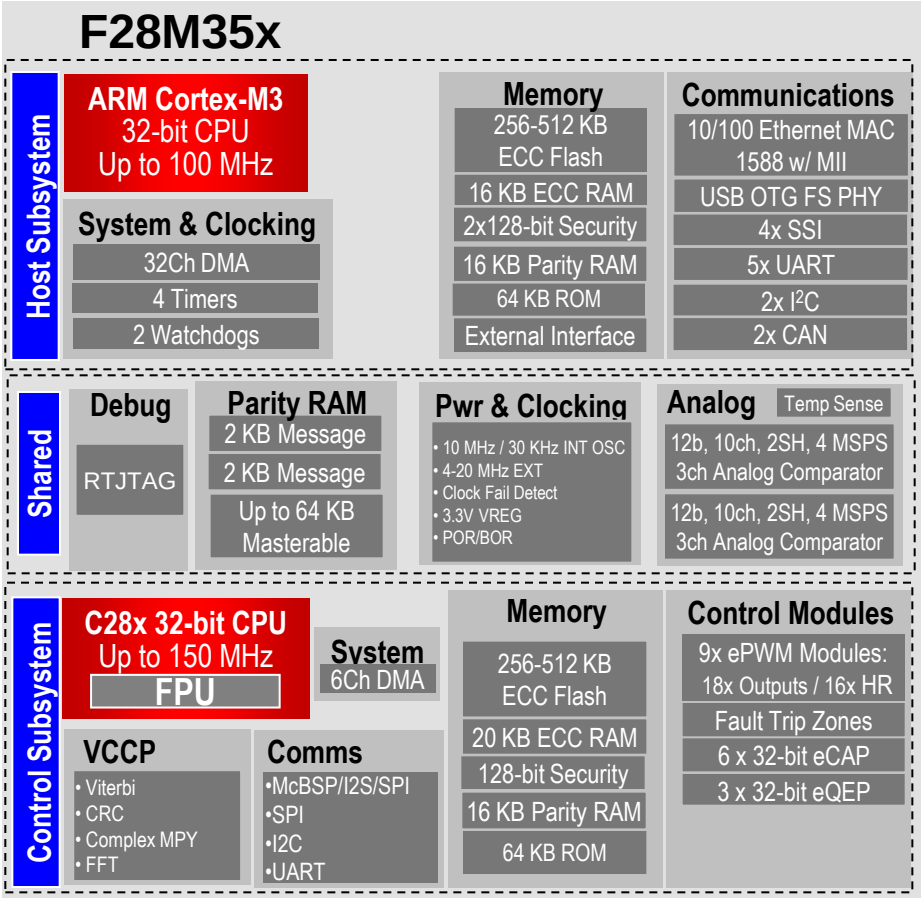

128 QFP 0.4mm
144 QFP 0.5mm
105^0C/125^0C and Q100

Budgetary AUP: $5 - $12 USD

All Pricing is to be considered budgetary and subject to change

Pricing is 1KU SRP -40 to 105C

Concerto Example Applications

Concerto™-based Drive or Soft Start

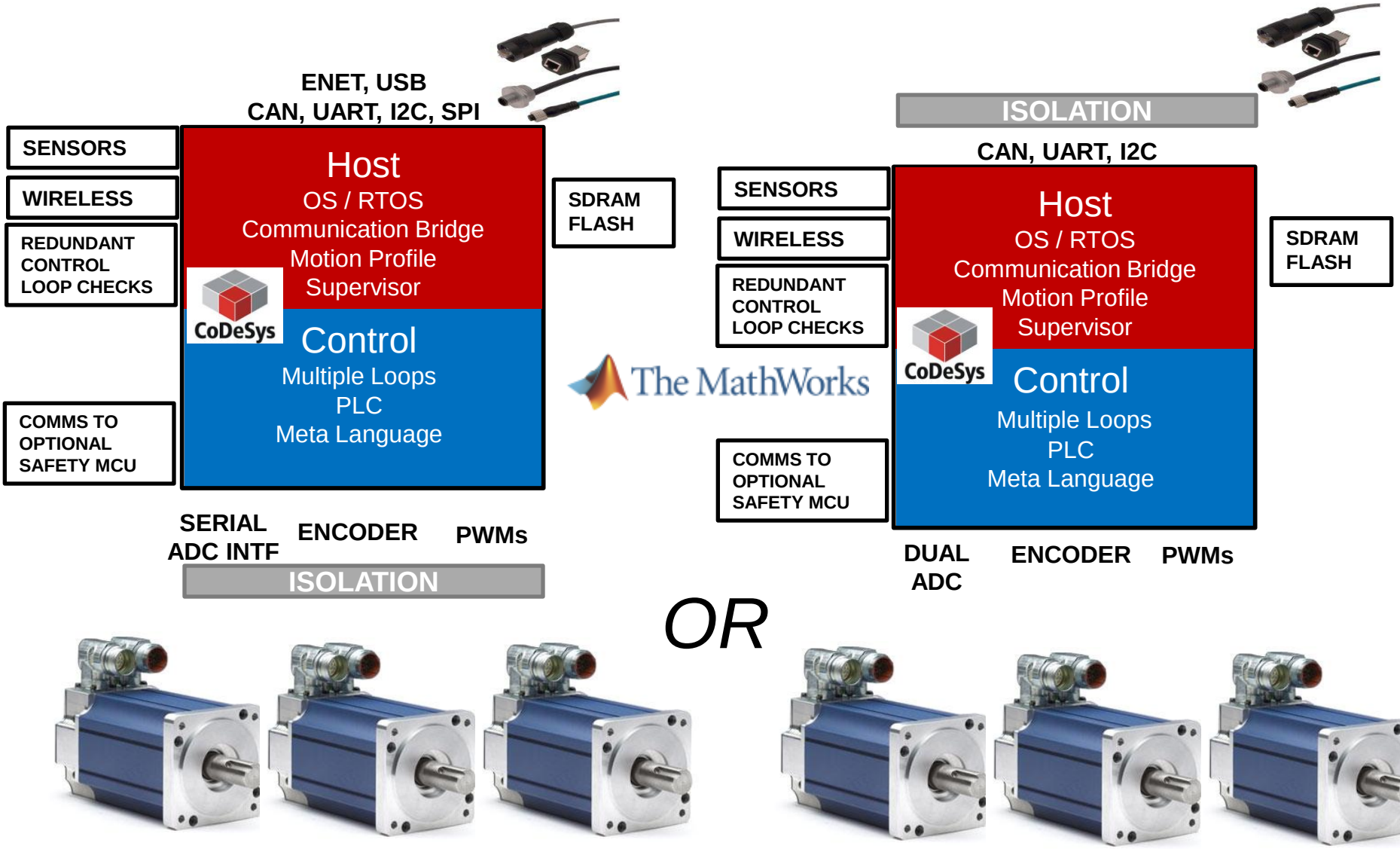

Texas Instruments

Concerto™-based E-meter with PLC

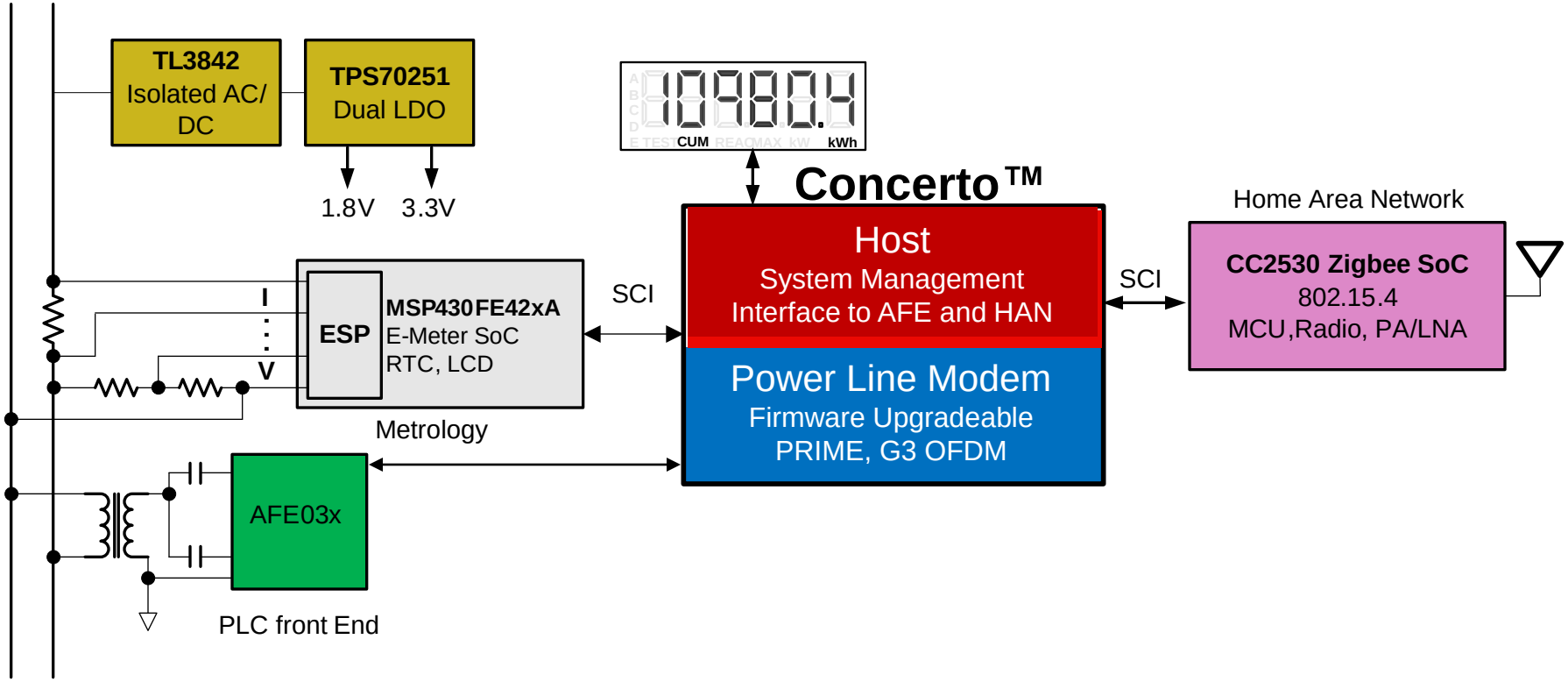

Concerto™-based Solar Inverter (string)

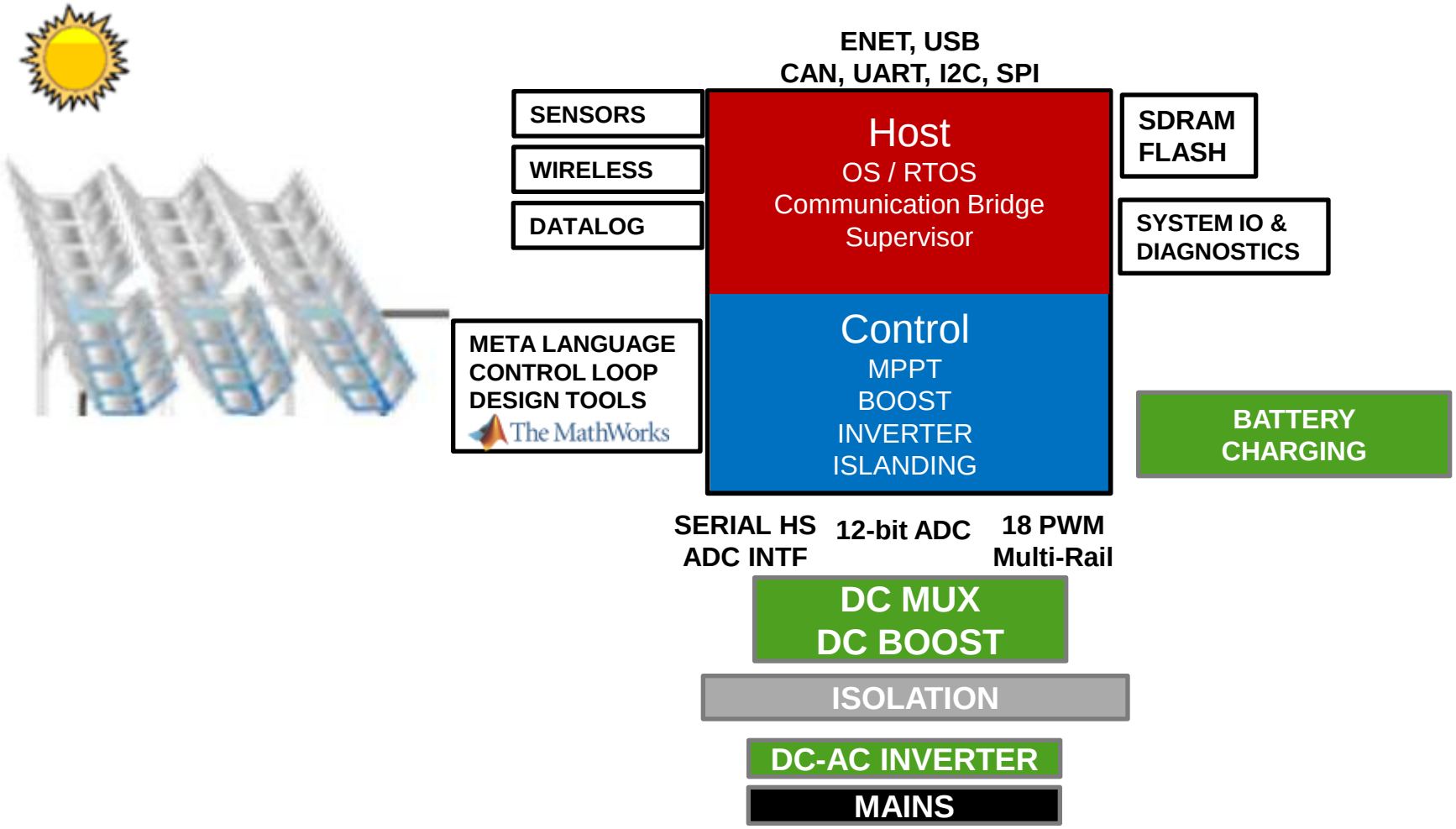

Concerto™-based Power Monitor

ENET, USB
CAN, UART, SP

SENSORS

WIRELESS

HMI DISPLAY

Host
OS / RTOS
Communication Bridge
Supervisor

Control
Power Supply Analysis
Multi-Channel
DSP Capability

SDRAM FLASH

SYSTEM IO & DIAGNOSTICS

H-RES ADC INTF

12-BIT HS ADC

PWMs

ISOLATION

Pre-Silicon Development Now → 3Q10

Stellaris:

- Cortex-M3 architecture,
- any Operating System
- Communication Peripherals:
  - UART, SPI, I2C, EPI, USB, ENET
- Tool: LM3S9B92

Piccolo:

- Control Peripherals:
  - ADC/COMP (x2),
  - ePWM (probably some small other enhancements being added),
  - eCAP, eQEP
- Clocking & Watchdog (similar)
- Tool: TMDXDOCK28035

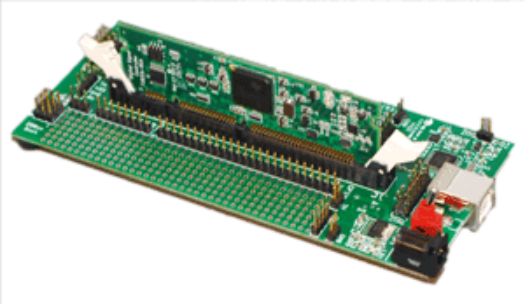

Delfino:

- C2000 CPU: C28x & FPU, McBSP, DMA
- Tool: TMDSDOCK28335

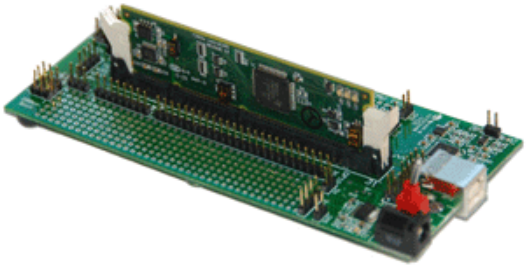

New:

- CAN module from Automotive
- Tool: None

3Q10 Pre →Post Silicon Development

150 MHz Floating
+ Flash Performance improvements

Different – but very good - ADC

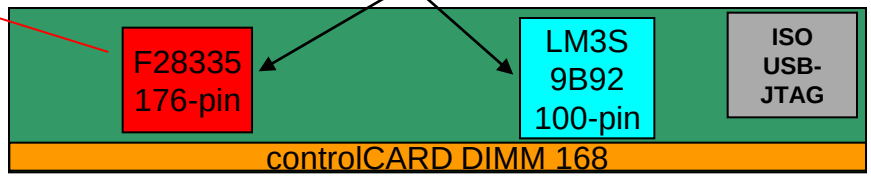

Replaced by a single F28M35x (144/128-pin) at production

Piccolo Control Peripherals - 40
16 ADC/COMP Chs, 14 ePWM chs, 4 eQEP chs, 1 eCAP/TZ ch

Save for Additional M35x I/O
+4 ADC, +4 ePWM ch, +8 HRCAP/GPIO, McBSP

Stellaris Digital Pin Mux - 65
ENET, USB OTG, CAN, EPI, All Serials

Control Breadboard

50-60 pins

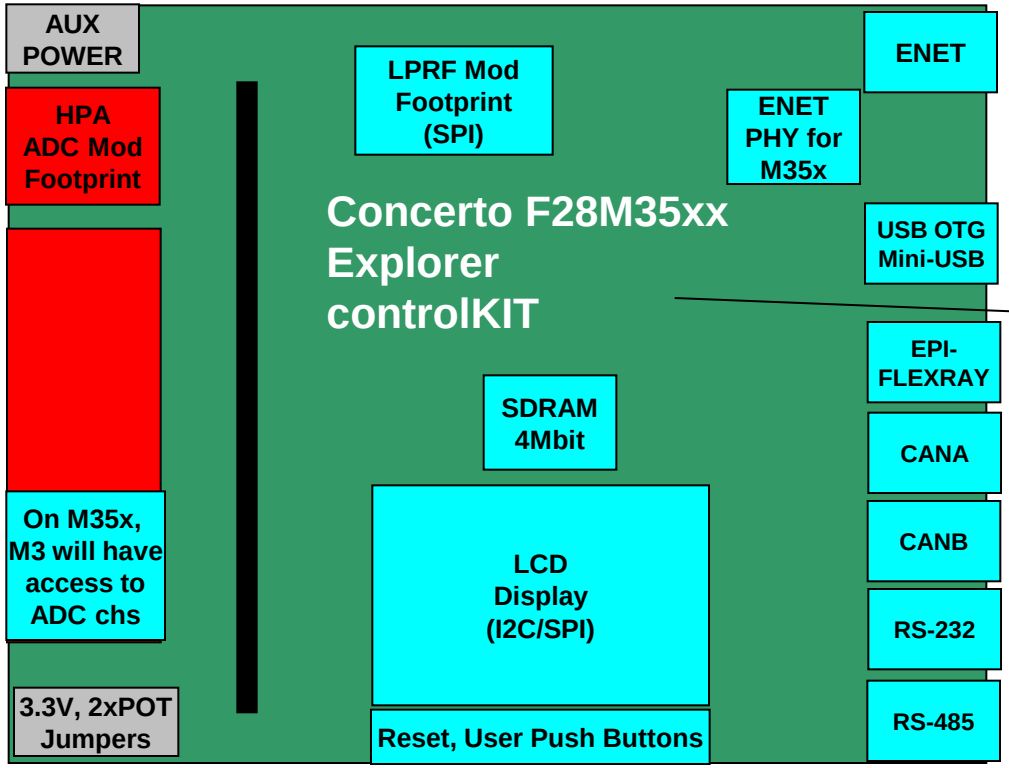

Complete base board re-use for production controlCARDF28M35xx

Hardware Tools and controlSUITE™

controlCard, dockingStation, controlStick, etc…

Kits: Hardware

Device Evaluation

controlSUITE™

controlSTICK
JTAG Emulation on-board
TMDX28027USB
$39

Experimenter's Kits -
JTAG Emulation on-board
TMDXDOCK28027
TMDXDOCK28035
TMDSDOCK2808
TMDSDOCK28335
$79-$159

Experimenter's Kits
Emulator required
TMDXDOCK28343
TMDXDOCK28346-168
$189

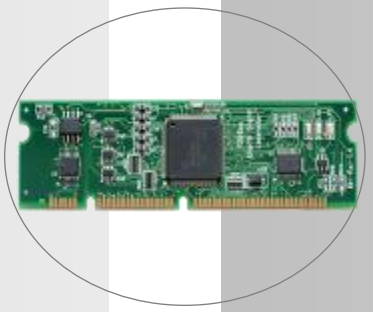

controlKIT Includes
- controlCARD + Base Board
- CCStudio IDE v3.3 32KB code size limit
- Example Software with lab document
- Power Supply and Cables

Developer's Package
- Schematics (source and .PDF files)
- Bill of materials (BOM)
- Gerber files to freely use or modify
- Pin-out table showing all key signals
- DIMM100 pin/socket mechanical details

NEW KITS
LED+DC/DC
HV PFC
HV PSFB
HV Resonant

controlSUITE™

Application Development

Digital Power Experimenter's Kit
TMDSDCDC2KIT
$229

AC/DC Developer's Kit
TMDSACDCKIT
$695

Resonant DC/DC Developer's Kit
TMDSRESDCKIT
$229

Renewable Energy Developer's Kit
TMDSENRGYKIT
$349

Sensorless FOC DMC + PFC Developer's Kit
TMDS1MTRPFCKIT 1 Motor
TMDS2MTRPFCKIT 2 Motor
$369/$399

controlSUITE™

High VoltageSensorless FOC DMC + PFC Developer's Kit
TMDSHVMTRPFCKIT - $599

controlSUITE™

All new kits in controlSUITE. Most existing being ported.

Texas Instruments

What is controlSUITE™?

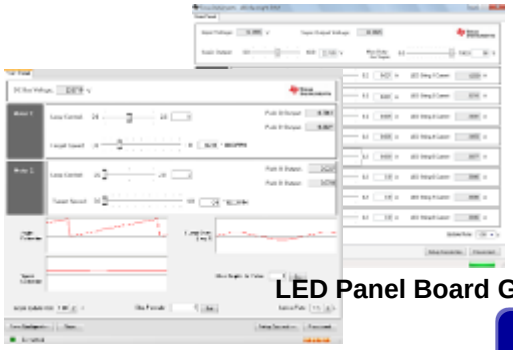

LED Panel Board GUI

Dual-Axis Motor Control Board GUI

controlSUITE™

Customer Application

Framework & Libraries

API Drivers

Bit-field Abstraction

C28x MCU
Registers & Addresses

Framework & Libraries

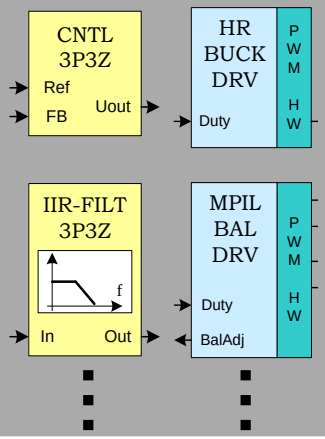

Using API Driver

```
interrupt void IsrAdc(void)
{
PWM_setDutyA(PWM_MODULE_2,duty);
}
```

Using Bit Field Headers

```
interrupt void IsrAdc(void)
{
EPwm1Regs.CMPA.half.CMPA =
   EPwm1Regs.TBPRD * duty;}
```

Using direct register access

```
MOVB    @9,#0x0F,UNC
AND     AL,@11,#0xFFFC
ORB     AL,#0x02
MOV     @11,AL
```

controlSUITE™ Libraries: Applications

- C or Assembly SOURCE Provided for all
- Modular structures or macros with variable inputs and variable outputs
- At initialization all variables are defined and outputs of one block are set as inputs to the next
- At run-time the structures or macro functions are called
- Complete documentation – including equations and theory – is provided for every module

Motor Control

Peripheral Blocks
- BLDC PWM
- PWM Full Compare
- HALL CAP
- HALL GPIO
- QEP
- PWM DAC
- Data Log

Control Blocks
- PID
- Speed Estimators
- Speed Freq/Period
- Clarke / iClarke
- Park / iPark
- SVGen
- Commutation Trig
- Impulse
- Mod6 Counter
- Phase Voltage Calc
- Ramp Controllers
- Sliding Mode Observer
- ACI Flux/Speed Estimators
- CLA Versions in Q310

Ex: Using "Park" from DMC Library

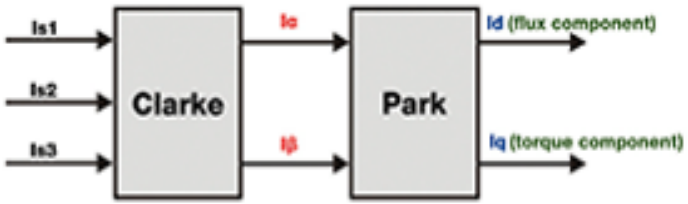


```
//initialization code, define macro per library
  #define PARK_MACRO(v)\
  v.Ds = _IQmpy(v.Alpha,v.Cosine) + _IQmpy(v.Beta,v.Sine);\
  v.Qs = _IQmpy(v.Beta,v.Cosine) - _IQmpy(v.Alpha,v.Sine);

//incremental build code, connect outputs and inputs
  park1.Alpha = clarke1.Alpha;
  park1.Beta = clarke1.Beta;

//run-time code, call  the function
  PARK_MACRO(park1)
```

Power

Peripheral Blocks
- ADC Conversion
- PWM DAC

Control Blocks
- 2P2Z
- PID
- Ramp Gen
- Sine Gen
- Slew Limit
- CLA Versions

Topology Blocks
- Buck (regular + HiRes)
- PSFB (regular + HiRes)
- Multi-phase Interleaved Buck
- PFC 2 Phase Interleaved
- PFC Current Command

Power Line Modem

Coming Soon

controlSUITE™ Kits: Hardware

Hardware Developer's Package

We provide you with all the necessary files to recreate the hardware. The PCB layout and schematics are broken up into modules that can be interconnected or implanted into a new design.

controlCARDs and controlKITs

Hardware Developer's Package includes:

- Bill of Materials
- PCB layout
- Schematics
- Gerbers

1	USB-Dongle-Piccolo [R4]				
2					
3	Item	Description	Digikey Part #	Qty	price
4					
5	U1	FT2232D	768-1010-1	1	$ 4.0
6	U2	TMS320F2802x (TI) 48 pin LQFP	TI to supply	1	
7	U3	TPS73033 SOT23-5	296-17580-1	1	$ 0.2
8	U4	93LC46BT SOT23-6	93LC46BT-I/OTCT	1	$ 0.2
9	U5	SN74LVC2G74 SM8	296-13273-1	1	$ 0.1
10	LD1	LED Green 0805	404-1021-1	1	$ 0.0

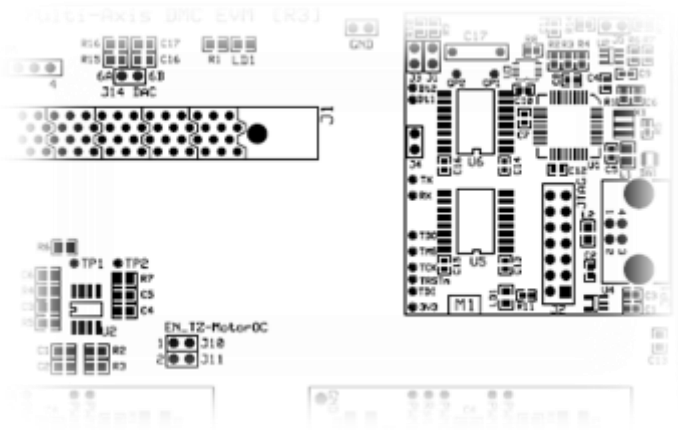

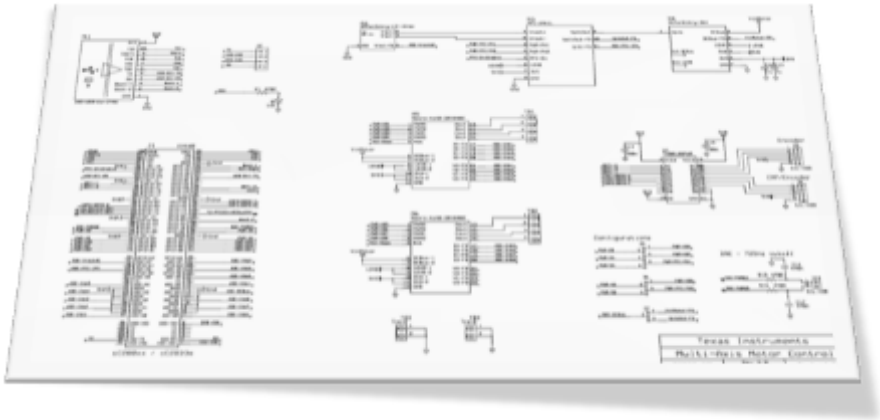

controlSUITE™ Kits: Systems

Library Blocks are "Wired" into *Systems*
Inside a full System *Framework (OS)*

1. **Initialization of Device**
2. **Instance & Initialize Blocks**
3. **Run Framework / OS**
4. **Incremental Build Levels**
5. **Connect & Call Blocks**

Example:
Sensor-less FOC Motor Control

Build Level 1: Verify Space Vector and PWMs
Build Level 2: Verify ADC conversion & Phase Voltage
Build Level 3: Tune PID for current control
Build Level 4: Verify Sensorless estimator
Build Level 5: Tune PID speed control
Build Level 6: Close all loops

Sensor-less Field Oriented Control
Permanent Magnet Synchronous Motor

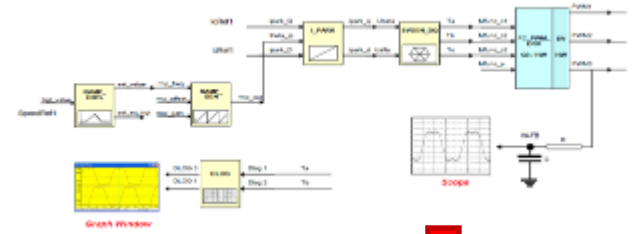

Build Level 1

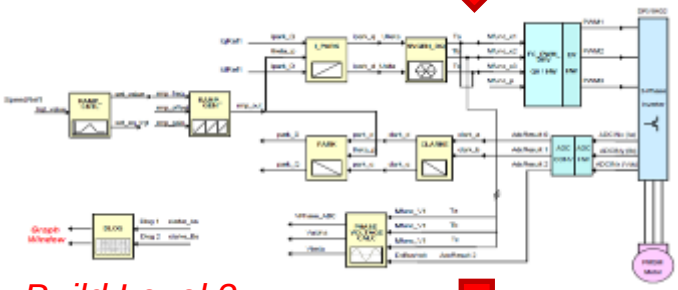

Build Level 2

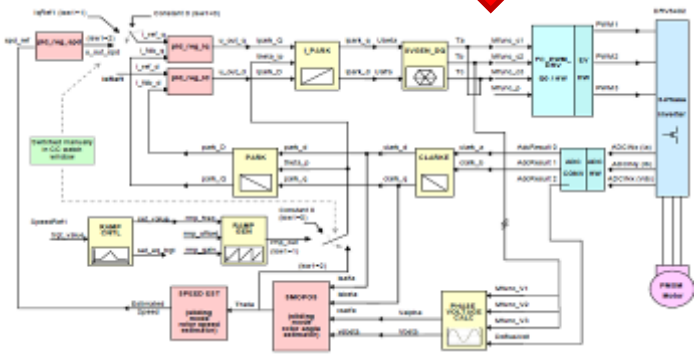

Build Level 5

controlSUITE™ Kits: GUIs

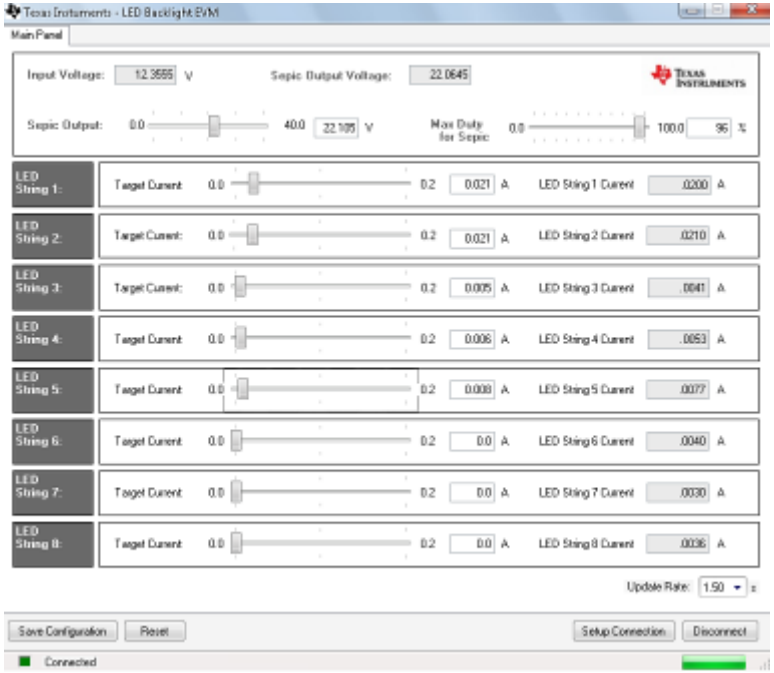

LED Panel Board GUI

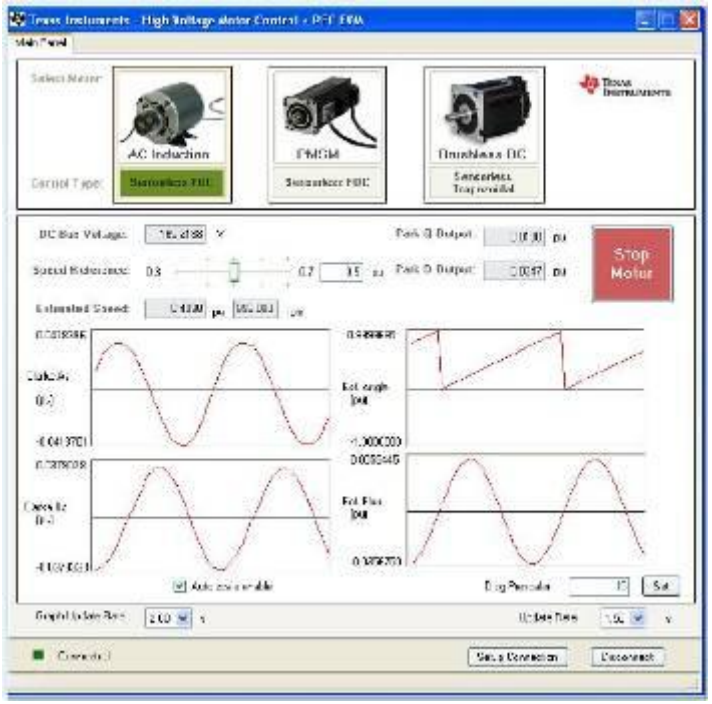

High Voltage Motor Control GUI

Connects through USB – Serial built in to each kit
CCStudio (IDE) not required
Images pre-loaded into flash on-chip for immediate use out of box
Source code for GUIs provided – Roll your own!

controlSUITE™ Software Release

Not all content in this presentation will be in controlSUITE for the January 19. controlSUITE will be released in phases. Application kits will be added throughout the year.

	Device Evaluation	Application Development
Jan 2010	• Piccolo F2802x & F2803x Bit Field Headers • Piccolo F2802x & F2803x Peripheral Examples • Piccolo controlSTICK examples • Control Law Accelerator Math Primitive Library • Piccolo Flash APIs	• Digital Motor Control Application Libraries (BLDC, ACI, PMSM) • Brushless DC (BLDC) Motor System Application Example • AC Induction (ACI) Motor System Application Example • Permanent Magnet Synchronous Motor (PMSM) System Application Example
2Q10	• Piccolo IQMath Libraries • Piccolo & Delfino Signal Processing Libraries • Delfino Floating Point Libraries • Additional CLA Libraries (PFC, etc.) • Delfino F2833 & C2834x Bit Field Headers • Delfino F2833x & C2834x Peripheral Examples • F2823x Bit Field Headers • F2823x Peripheral Examples • Delfino Flash APIs	• Digital Power Application Libraries • LED Lighting System Application Example • Power Factor Correction System Application Example • CLA Digital Motor Control System Example • Dual Motor Control System Example
2H10	• Piccolo and Delfino Peripheral API Drivers • Additional Floating Point Libraries • Existing evaluation kits	• Additional application kits • HEV/EV application kits • Technology Exploration Reference Designs • PLC Library and applications

Development Environment and 3rd Parties

CCSv.4, Matlab, VisSim, CoDeSys, etc…

Debug and Software Development Tools

Code Compser Studio (CCS v4)

controlSUITE includes a FREE fully-featured version of Code Composer Studio v4 (32kb code limited)

- Takes advantage of the real-time debug circuitry on C2000 devices and provides a powerful debugging environment.
- Real-time watch windows and graphs aid in software verification and debugging.
- Includes many additional tools for C2000, such as the DSP/BIOS real-time operating system, an emulator, flash programmer, and more.

Real-time Mode Debug

Real-time mode for C2000 gives designers real-time visibility into their applications.

- Enables real-time, non-intrusive, continuous visibility into the way target applications operate in the real world
- Does not require use of target memory, special interrupts, or integration with the application
- Allows time-critical interrupts to be serviced while background program execution is suspended

DSP/BIOS Real-time Operating System (RTOS) v6

DSP/BIOS is a complete and powerful solution to OS and scheduling needs. DSP/BIOS requires no runtime license fees and is backed by Texas Instruments' worldwide training and support organizations.

- Deterministic kernal with a preemptive scheduler
- Graphical or script-based OS configuration
- Graphical analysis & debug tools
- Interrupt dispatcher and interrupt management macros
- Multiple intertask communication services, including semaphores, mailboxes, and queues

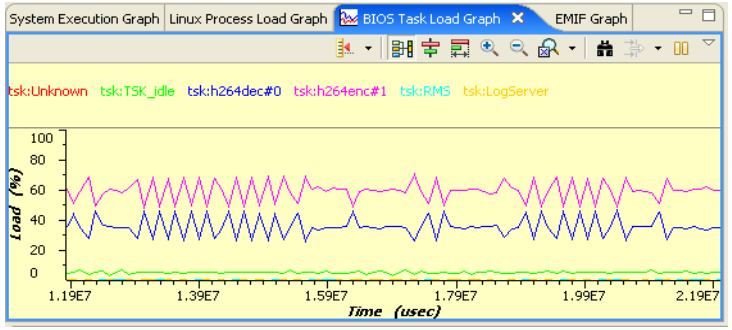

Screenshot from DSP/BIOS v6 in Code Composer Studio, showing task CPU load

Infrastructure: Development Network

Graphical Development & Code Gen for C2000

Metatools

Visual Solutions

VisSim

www.vissim.com/c2000

The Mathworks

Embedded Target

www.mathworks.com/products/tic2000/

- **DMC and Peripheral Blocks**
- **Simulation and Modeling**
- **Auto-Tuning**
- **Code Generation**
- **Interface to CCStudio IDE**
- **Works with controlKITs**

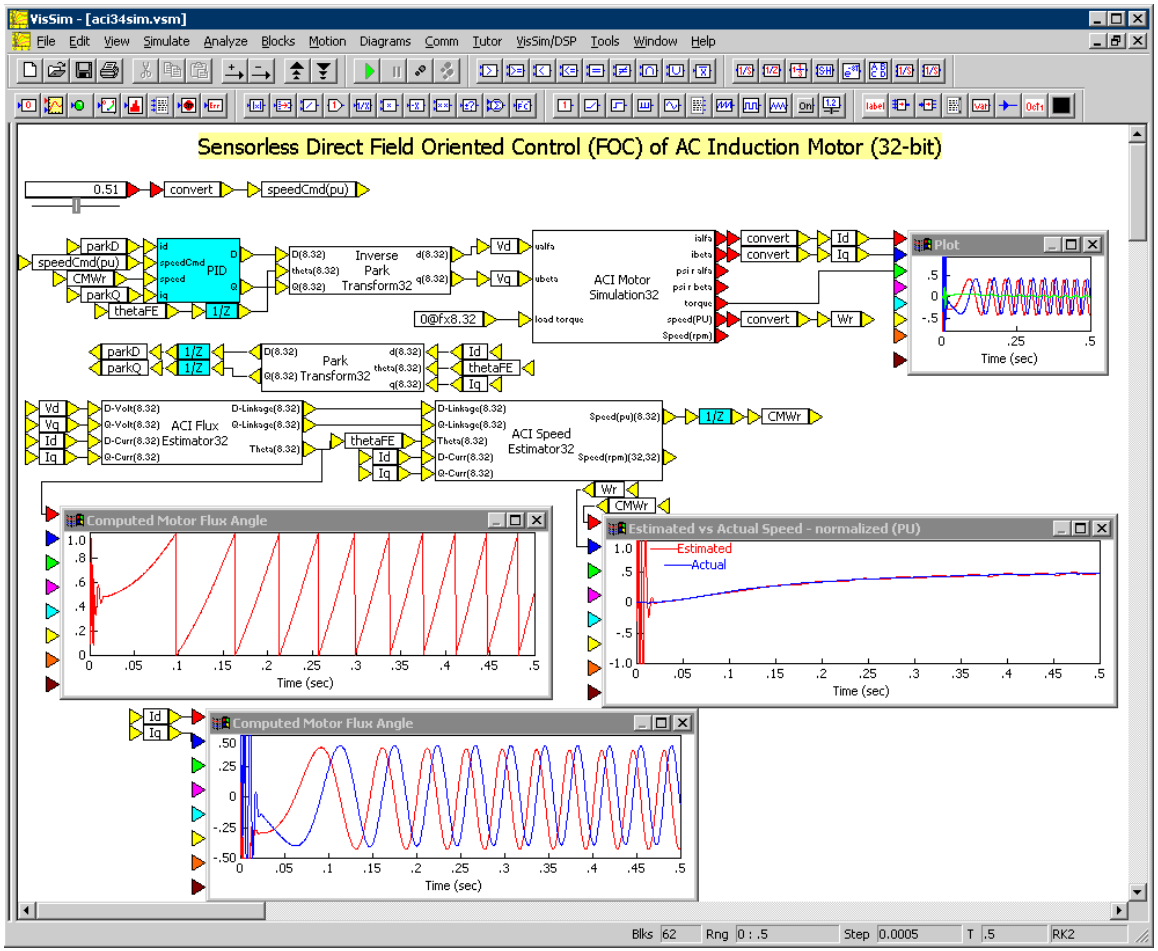

Multiple Local Consultants & Design Houses

Texas Instruments

Home

CoDeSys Automation Tools

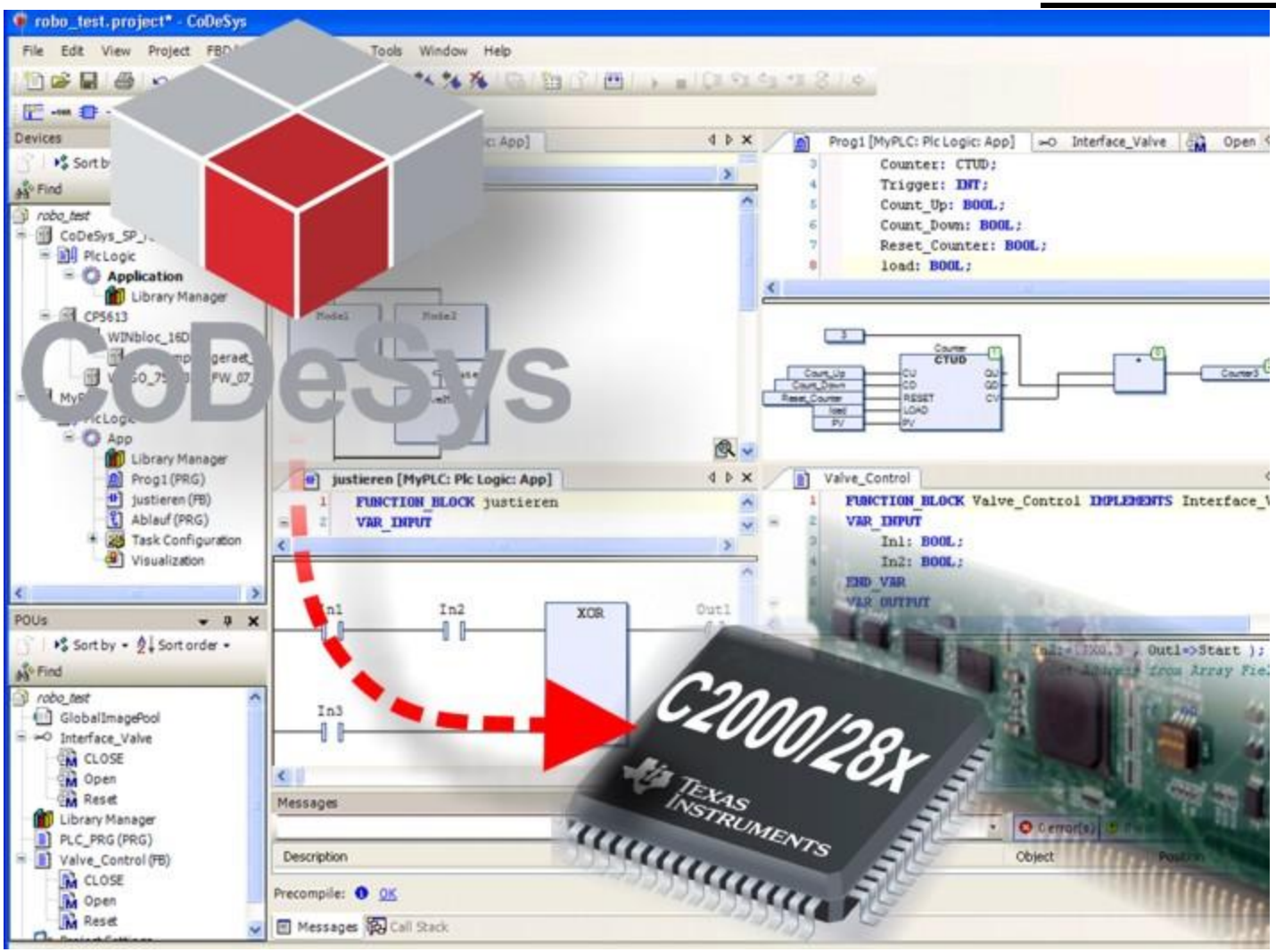

C2000 Real-Time MCU Support

- IEC 61131-3 programming tool
- User application code is translated into MCU machine code for optimum performance
- Source code management
- Visualization development
- PLC, CNC, and motion tool kits

http://www.3s-software.com/

Texas Instruments

Summary

Winning with C2000 in the key applications

Winning with C2000: Motor Control

Methodologies

High energy efficiency via Advanced Control
- Variable speed Real-time control
- Better dynamic and transient control

Broadest MCU Architecture
- 40-300MHz Fixed & Floating Point
- Parallel FP CLA for fastest loops
- Single Cycle 32x32-bit MAC
- Fast interrupts
- Flexible & Fast interrupt system
- Real-time debugging
- Best in class ADC performance

Piccolo Family for Lowest System Cost
- High Level of Integration
- Integrated Dual OSC, VREG, Watchdogs
- Limited life support
- No external GPIO filters needed

C2000 Digital Motor Control Gives You MORE

C2000 based motor control systems enable energy and cost savings throughout products

– Variable speed control	→	MORE efficient motors
– Field-oriented control	→	MORE efficient control
– Space vector PWM	→	MORE efficient power stage
– Sensor-less control	→	MORE cost effective
– Multi-axis control	→	MORE motors per controller
– Integrated digital PFC	→	MORE system functions
– Meeting IEC standards	→	MORE reliable and robust
– Broadest MCU portfolio	→	MORE products, one platform

Incremental Build Based Projects
- Incremental section of code built each level
- Verify each portion of their system
  - -PWMs, feedback, calculations
  - -Control laws, inner/outer loop, supervision
- Critical in motor control with so many different system variables

Application Libraries

Specialized, application specific software functions
- Modular macros with variable inputs and outputs
- At initialization all variables are defined and outputs of one block are set as inputs to the next
- Complete documentation – including source code, use and technical theory – is provided for every module

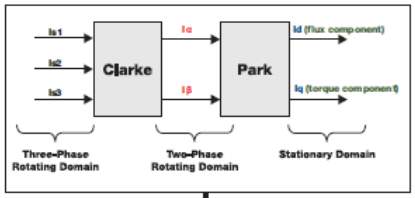

Digital Motor Control Library

Transforms and Estimators
- Clarke, Park, SMObserver, Phase Voltage, Resolver, Flux, Speed Calculators and Estimators

Control
- Signal Generation, PID, BEMF Commutation, Space Vector Generators

Peripheral Drivers
- Different modes and topology support
- ADC, PWM, Encoders, Sensor Captures

Ex: Using "Park" from DMC Library

```
//initialization code, define macro per library
  #define PARK_MACRO(v)
  v.Ds = _IQmpy(v.Alpha,v.Cosine) + _IQmpy(v.Beta,v.Sine);
  v.Qs = _IQmpy(v.Beta,v.Cosine) - _IQmpy(v.Alpha,v.Sine);

//incremental build code, connect outputs and inputs
  park1.Alpha = clarke1.Alpha;
  park1.Beta = clarke1.Beta;

//run-time code, call the function
  PARK_MACRO(park1)
```

Solutions

Low Voltage Dual Axis DMC + PFC Kit
TMDS1MTRPFCKIT
TMDS2MTRPFCKIT
$369/$399

High Voltage DMC + PFC Kit
TMDSHVMTRPFCKIT
$599

Quick Start GUI with all projects Flashed in MCU

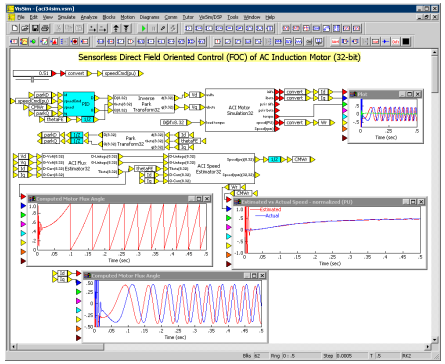

Matlab & VisSim Integration
Simulation, Modeling, Loop Optimization, Graphical Development, Peripheral Abstraction, Auto Code Gen, Works with TI Hardware

Motor Control 1-day Workshop

On-Line Self-Paced Coming 2H10

Coming in 2010

- DRV83x2 + Piccolo Kit for BLDC/PMSM
- DRV84x2 + Piccolo Kit for Stepper/Brushed
- High Voltage + Delfino FPU F28335 controlCARD
- Low Voltage Rev: BLDC and ISO CAN Support
- PFC using new DPSLib, FOC on CLA, Auto Tuning

www.ti.com/c2000dmc

Texas Instruments

Winning with C2000: Digital Power

Methodologies

Reduces costs
- -Tunable platforms
- -Calibration across operating range
- -Reduced board area and parts count

Higher quality
- -Adaptive; efficiency across load range
- -Flexibility through programmability
- -Calibration at final functional test
- -Less drift and better noise immunity
- -Monitoring for quality improvement
- -Proven concept in digital motor contrc

Higher reliability
- -Built-in supervision
- -Diagnostics, failure prediction

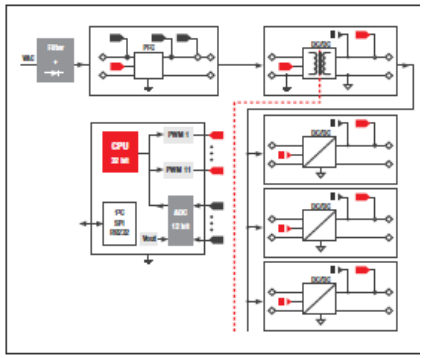

Control Topologies

Flexible peripheral support, with DPS library of drivers for any power stage topology, including
- Synchronous buck: 1, 2, 3 phase interleaved
- Synchronous buck boost
- Power factor correction: 1, 2, 3 phase interleaved
- Half and full bridge, phase shifted and synch rectification
- Resonant

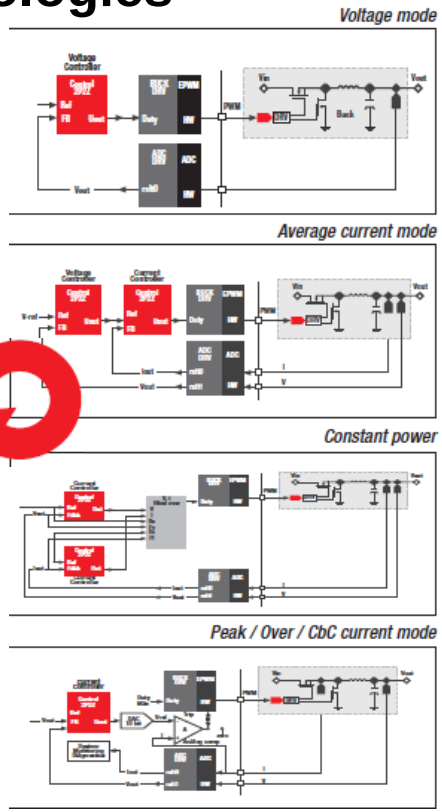

Control Techniques

Programmable control techniques with performance and flexibility for personalized system management and product differentiation
- 2 Pole, 2 Zero
- 3 Pole, 3 Zero
- PI, PID
- Non-linear techniques
- Adaptive co-efficient sets
- Phase management
- Fault monitoring, clamping, dead-band adjustment
- Tunable efficiency across load and operating range

Solutions

Digital Power Experimenter Kit
TMDSDCDC2KIT
$229

AC/DC Developer Kit
TMDSACDCKIT
$695

Resonant DC/DC Developer's Kit
TMDSRESDCKIT
$229

Renewable Energy Developer Kit
TMDSENRGYKIT
$349

Digital Power 3-day Workshop

sponsored by Biricha Digital Power Ltd

Digital Power 1-day Workshop

On-Line Self-Paced Coming Soon!

Coming in 2010

- New DPSLib in controlSUITE™
- High Voltage PFC Kit
- AC/DC Kit port to Piccolo & controlSUITE™
- High Voltage PSFB Kit
- High Voltage Resonant LLC Kit
- Control Loop Tuning Wizard

www.ti.com/c2000getstarted

Texas Instruments

Winning with C2000: LED Lighting

Methodologies

Advanced Features

-Digital control of LED strings allows features such as:

- -precise dimming control
- -color adjustment
- -blown string detection
- -thermal runaway prevention

Communication

-Integrate communication into lighting system

-Power line communication for remote communication

System Integration

-Single Piccolo MCU can control power conversion stage and LED driver stages

-Communication can be integrated onto one Piccolo MCU

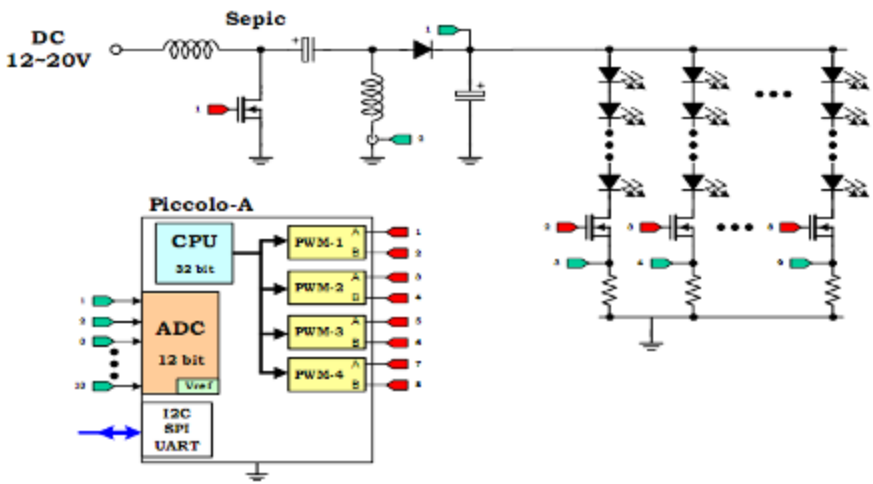

Solutions

DC/DC LED Lighting Developer's Kit
TMDSDCDCLEDKIT
May 2010 $379

TI LED Landing Page

Includes information on TI analog and digital LED solutions

www.ti.com/led

Coming in 2010

- DC/DC LED Lighting Developer's Kit
- AC/DC LED Lighting Developer's Kit
- TI PLC Modem Developer's Kit
- LED landing page updates www.ti.com/led

Winning with C2000: Power Line Communications

Methodologies

Software Flexibility

-Software defined power line communication modem enables system flexibility

-PLC modem can be updated as standards change

-Single hardware platform can address multiple standards

-Software can be modified to fit custom application

Advanced TI Analog

-TI analog for PLC enables multiple frequency bands and reduced component count

System Integration

-PLC modem can be done on a Piccolo MCU with headroom left for other tasks

- PLC modem ban be integrated into control system enabling a single chip solution

Solutions

PLC Developer's Kit

June 2010

TI PLC Landing Page (May)

Includes information on TI analog and digital PLC solutions

www.ti.com/plc

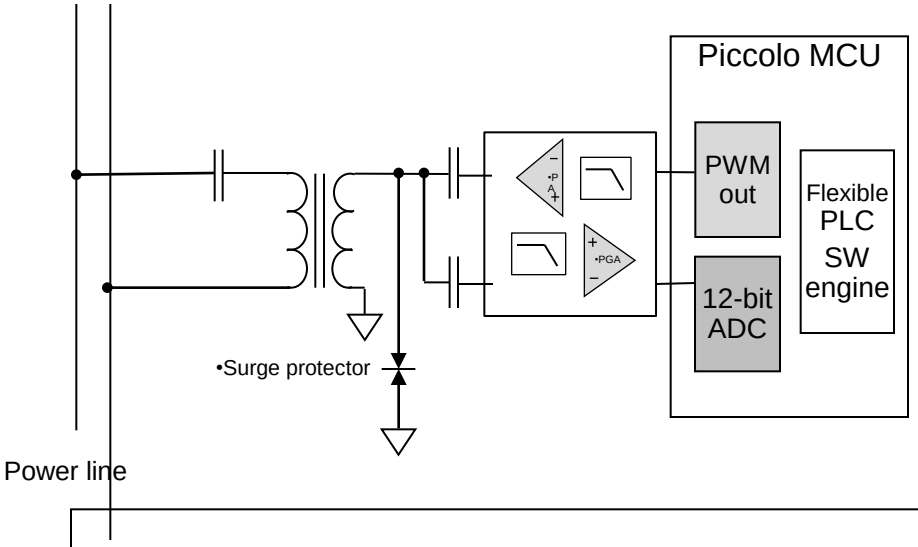

Coming in 2010

- PLC Developer's Kit
- plcSUITE Software
- plcSUITE Piccolo software
- OFDM, sFSK, CELENEC A and B support
- PLC landing page updates www.ti.com/plc

Texas Instruments