Energy Harvesting and Storage For Zero Power Wireless Networks

Roger Roisen

CYMBET™
CORPORATION

Agenda

Energy Conversion and Storage Solutions

- Introduction to Cymbet
- EnerChip™
  - Why Solid State Storage for Energy Harvesting
  - Storage Device Construction
  - Electrical Characteristics of Storage Device
- EnerChip CC3150
  - Block Diagram
  - Backup Application example
  - PalFI Design Example – backup for Semi Passive Tag
- Energy Harvesting – Practical Design Examples
  - DC-DC conversion design example with Peak Power Tracking
  - Theory of operation
  - Digi-Key Weather Station Design Example CC430
  - Transducer Selection and Design Considerations
- Low Power RF Systems
- Design Considerations for Low Power
  - Radio specifics
  - Estimating power requirements RF Systems
  - Application Examples
- Summary

©2009 Cymbet All Rights Reserved

Why Solid State Energy Storage:
Solid-State Energy Solutions

- Component packaged device:
  - Solid-state batteries on silicon
  - Thousands of recharge cycles
  - Low self-discharge, flat voltage profile
  - IC processing, packaging, reflow tolerant
  - Enables high-volume SMT manufacturing
- Environmentally-friendly:
  - No harmful chemicals, RoHS
  - No special disposal handling
- EnerChips can be integrated with ICs
- Enables permanent, self-powered systems

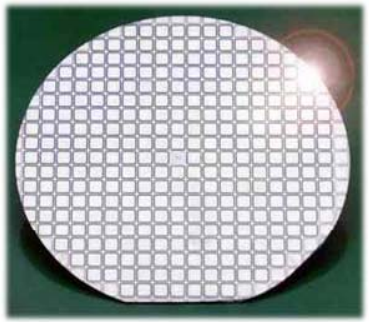

IC Packaging &
Bare Die

©2009 Cymbet All Rights Reserved

Cymbet Widely Recognized as an Industry Innovator

2010 Finalist Best Enabler Award for Green Engineering

Best of Sensors Expo 2008 and 2009

2009 Most Innovative Renewable Energy Award EnerChip EH Module

Frost and Sullivan 2008 Best Practices Award for Innovation in Battery Technology

2009 Editors Choice for EnerChip CC

Tekne 2008 Award Winner for Best Small Advanced Manufacturing Company

2009 Readers Choice for EnerChip EH Solar Energy Harvesting

Embedded Computing Design Editors Choice Award 2008

©2009 Cymbet All Rights Reserved

EnerChips for Energy Harvesting and Back-up Power

EnerChip products enable two important market solutions:

- **Permanent, Self-Powered Wireless Sensors**
- **Drop-in Back-up Power w/Battery Management**

Back-up Power Solutions

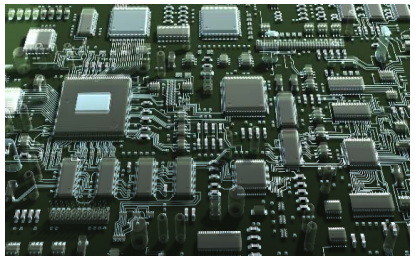

Energy Harvesting Devices

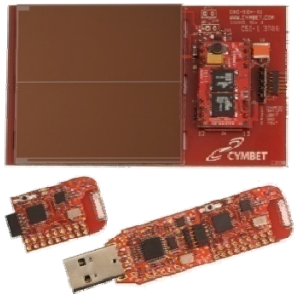

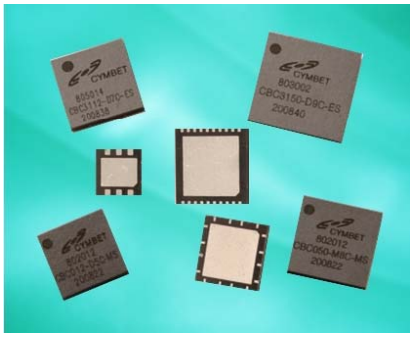

EnerChip Product Family

©2009 Cymbet All Rights Reserved

EnerChip™ Construction

Single 6-Pin or 16-Pin SMT DFN/QFN Package

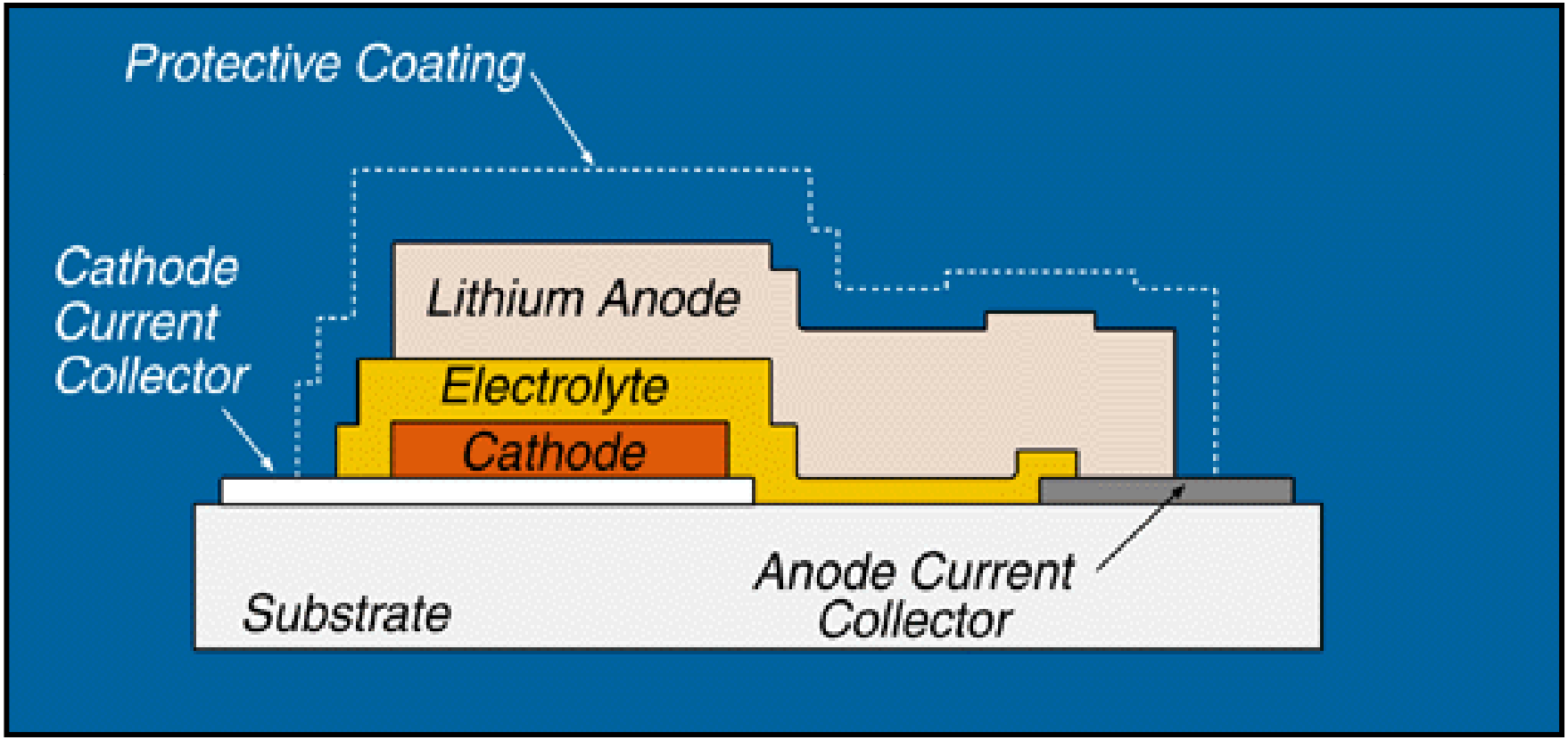

Image Courtesy DOE-ORNL

©2009 Cymbet All Rights Reserved

EnerChip™ Assembly Process

EnerChip Wafer

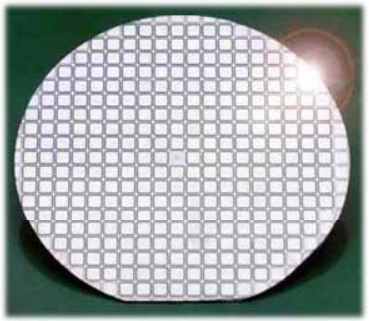

Diced

EnerChip Die

Packaged

EnerChip Package

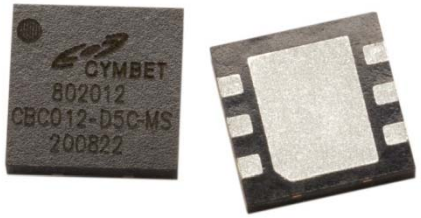

To Surface Mount Machine

To Reflow Solder

Final Assembly

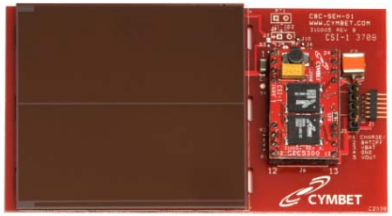

EnerChip on Board

©2009 Cymbet All Rights Reserved

Flat Discharge Voltage Profile

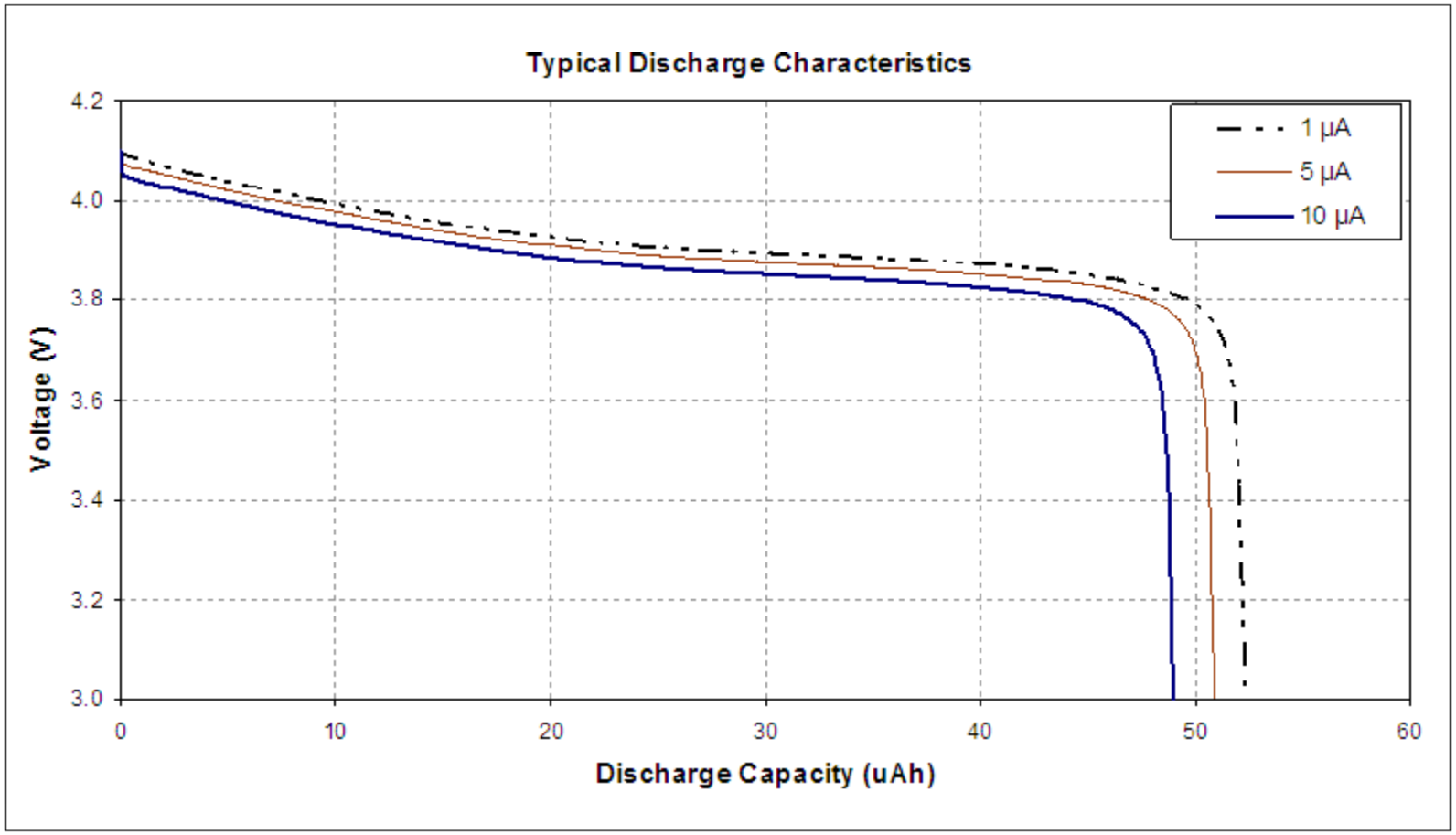

©2009 Cymbet All Rights Reserved

Fast Recharge Specifications

Charge Current & Charge Capacity vs. Charge Time

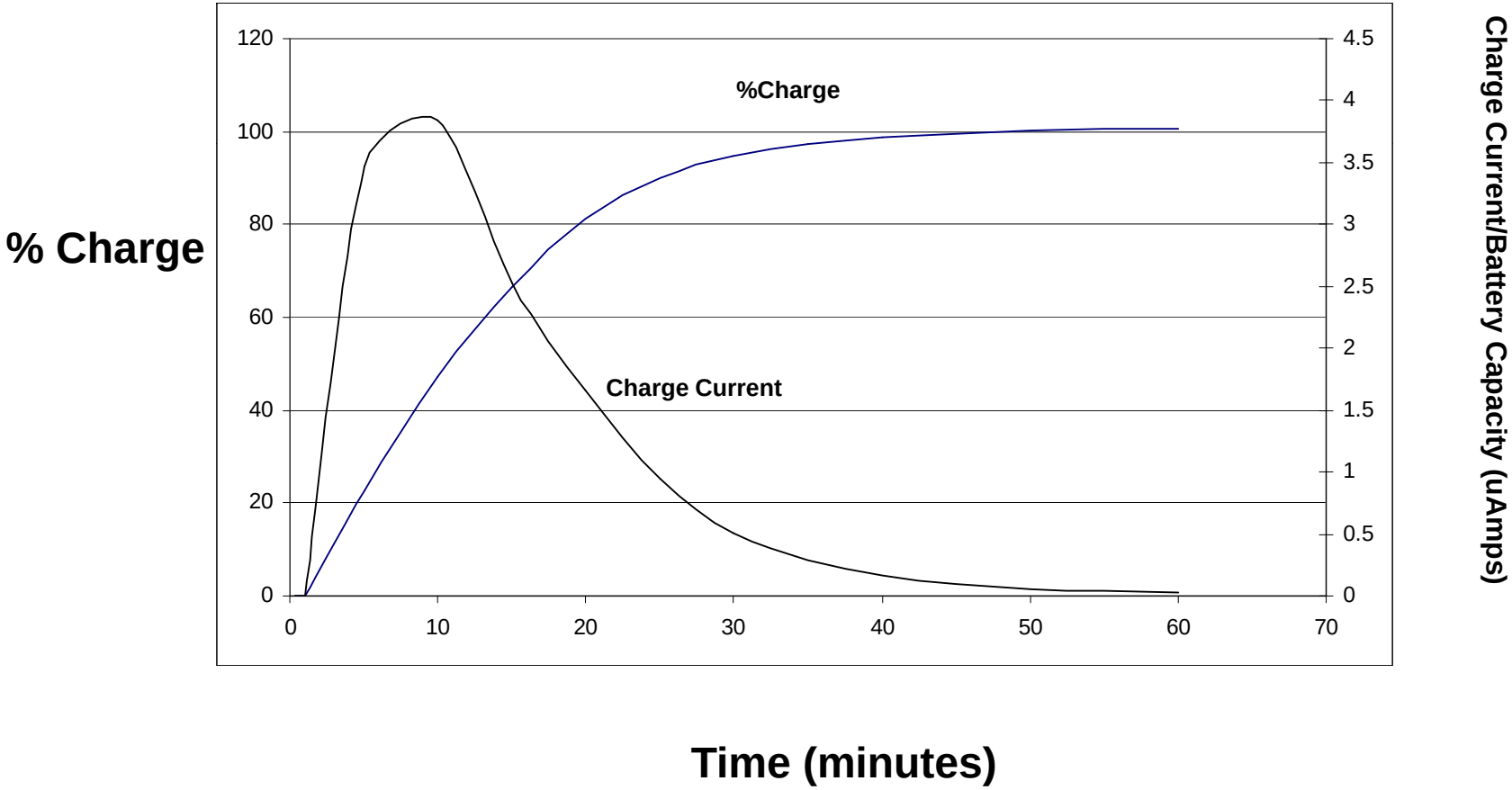

©2009 Cymbet All Rights Reserved

Low Self Discharge

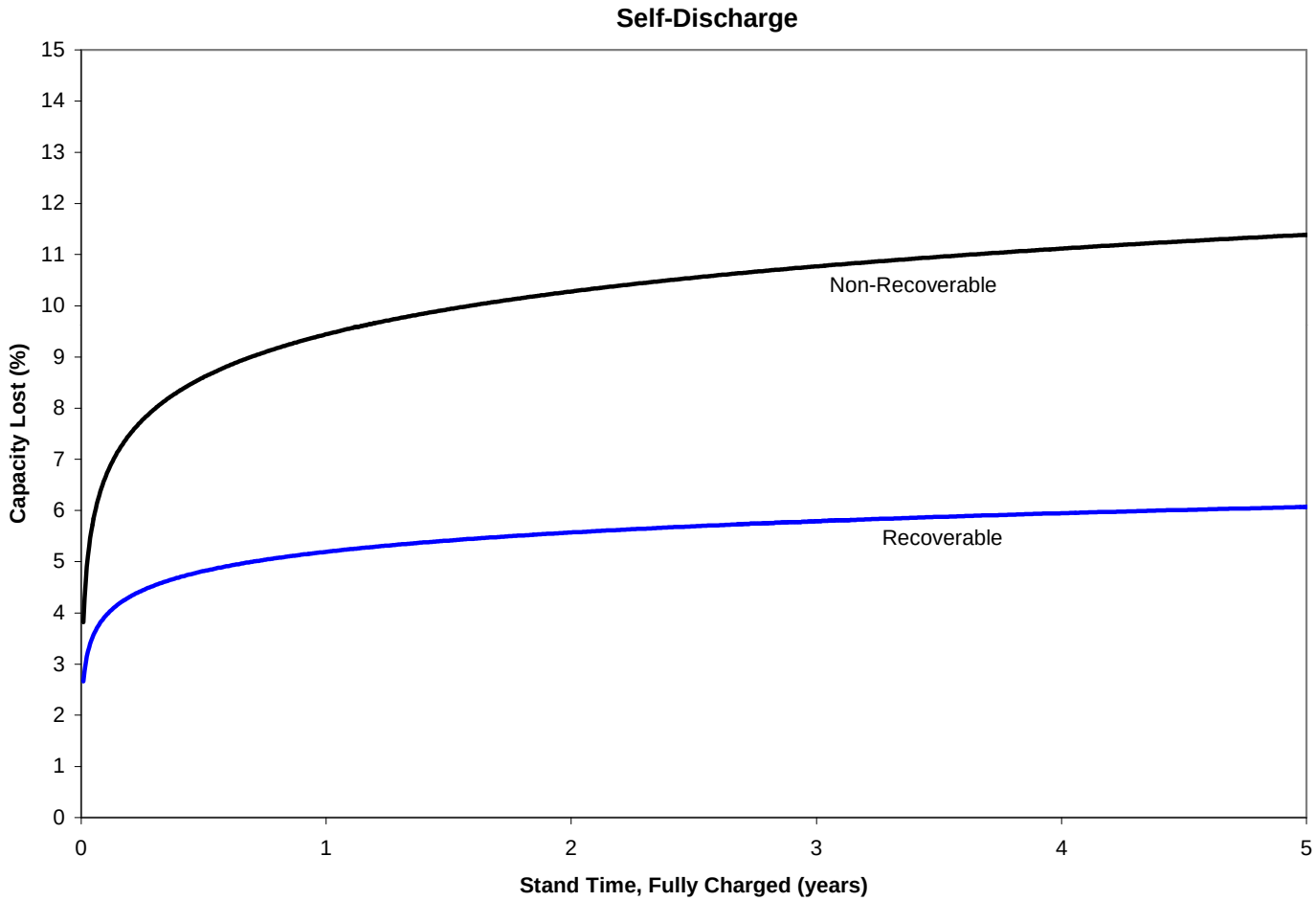

©2009 Cymbet All Rights Reserved

Stable Capacity over Cycle Life

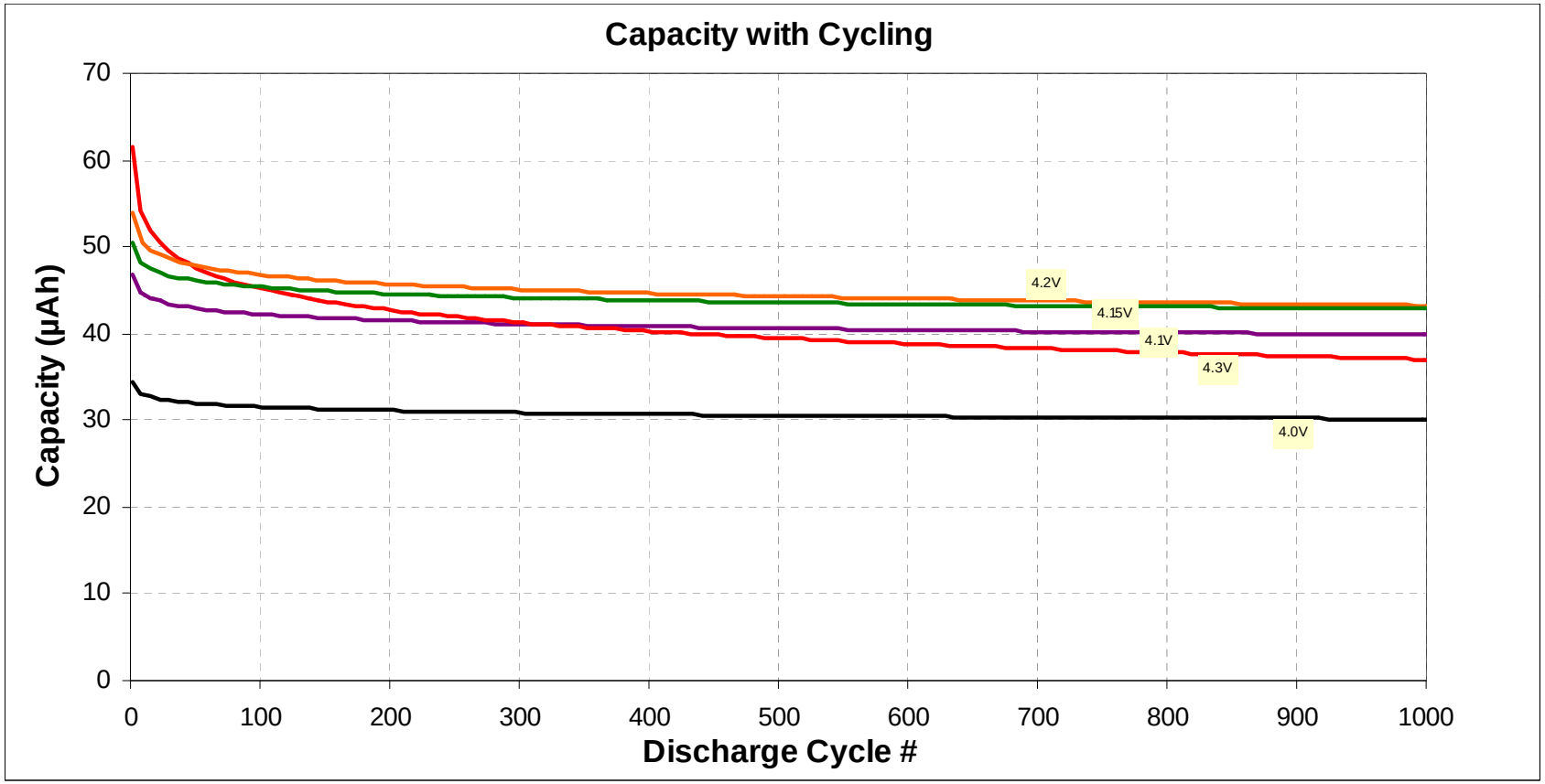

©2009 Cymbet All Rights Reserved

EnerChip CC Block Diagram

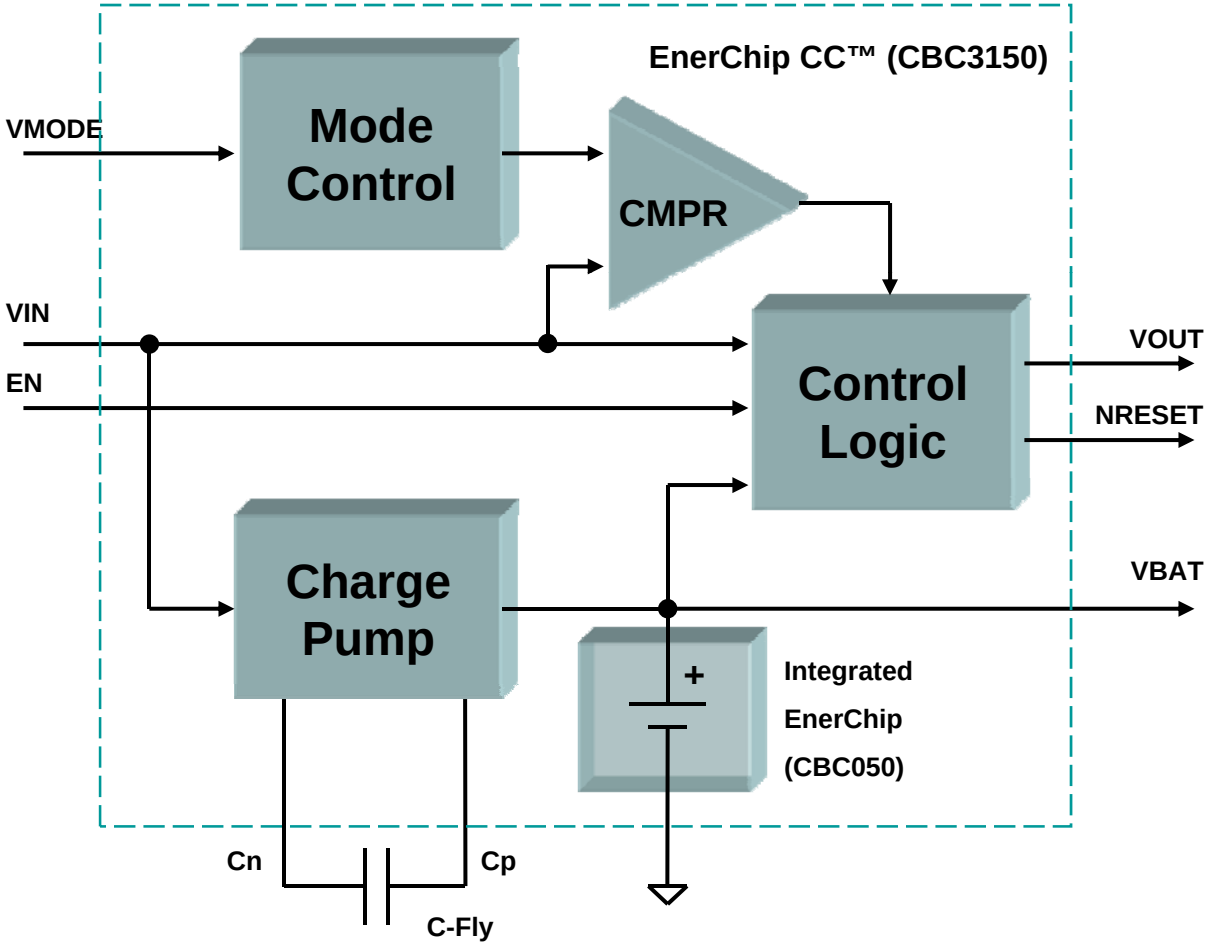

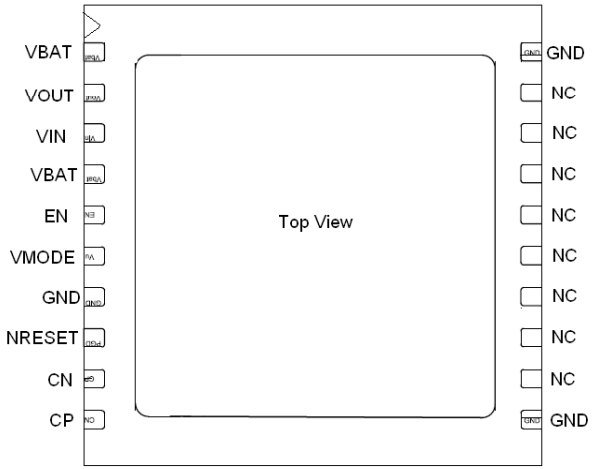

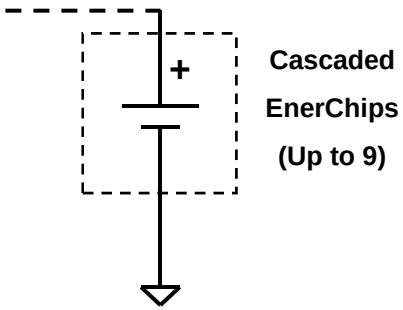

©2009 Cymbet All Rights Reserved

MSP430 Backup Application

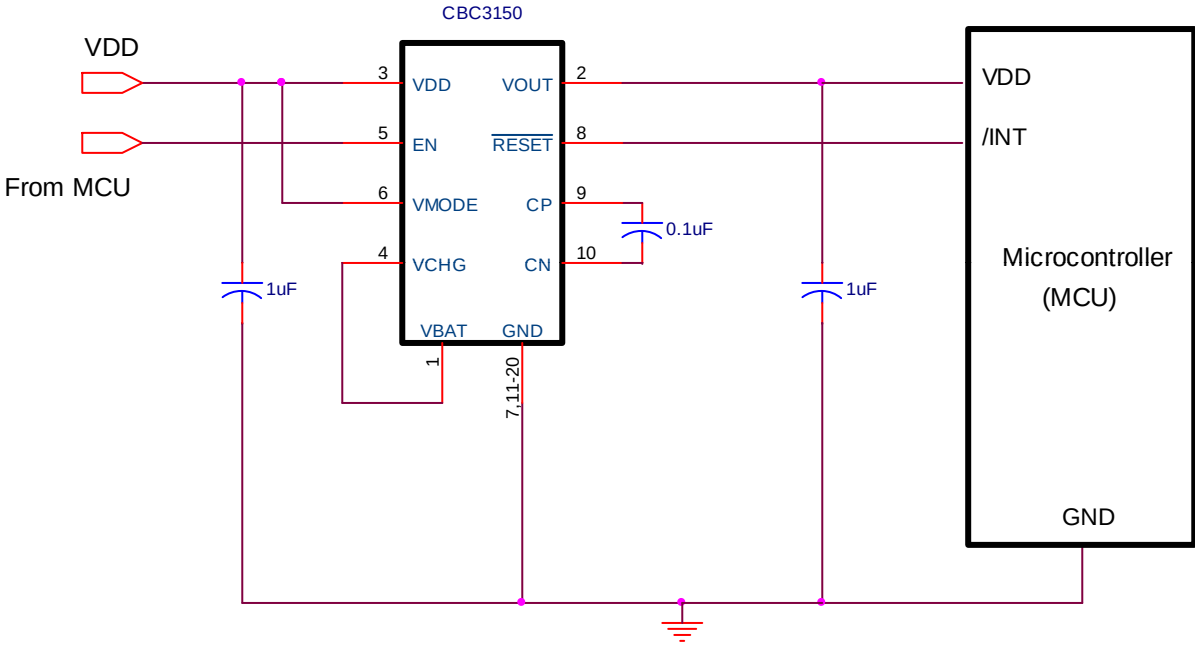

- Simple two wire microcontroller connection:
  - V_{OUT} connects to microcontroller's power pin – power to uP automatically switches when VIN goes below user selected threshold
  - RESET/ connects to Microcontroller interrupt input indicates the MCU is running off the battery

©2009 Cymbet All Rights Reserved

Applications: Turning Passive Tags Into Semi Passive Tags

- PaLFI Passive Low Frequency Interface Device TMS37157
  - Integrated battery less Half Duplex LF interface
  - 3-Wire SPI interface to any microcontroller
  - 121 Bytes free available EEPROM user memory
- Semi Passive Tags With Rechargeable Energy Storage
  - Utilizes CBC3150 for remote power to Tag
  - Ultra low current consumption
  - Allows for active data logging
  - Recharged when in proximity of LF field during data download with TI RFID Reader
  - When battery is drained, tag data can still be read through the LF field
  - Used in capsulated systems without power availability needing active sensors

©2009 Cymbet All Rights Reserved

Application Schematic

DATA LOGGER:

- Microcontroller directly connected to the battery
- Microcontroller is in Low Power Mode and performs measurements from time to time
- Measurement results are stored in EEPROM of the PaLFI device
- EEPROM of PaLFI could be accessed without battery support

RUN BY FIELD OPTION:

- Battery can be replaced by a capacitor
  → System performs measurement only if a LF field from a external reader is provided
- Measurement results is transferred over the LF interface

Application Examples:

- Sensors, Implantable Devices, Hearing Aids, Inventory Management, Asset Tracking, Start of active communication

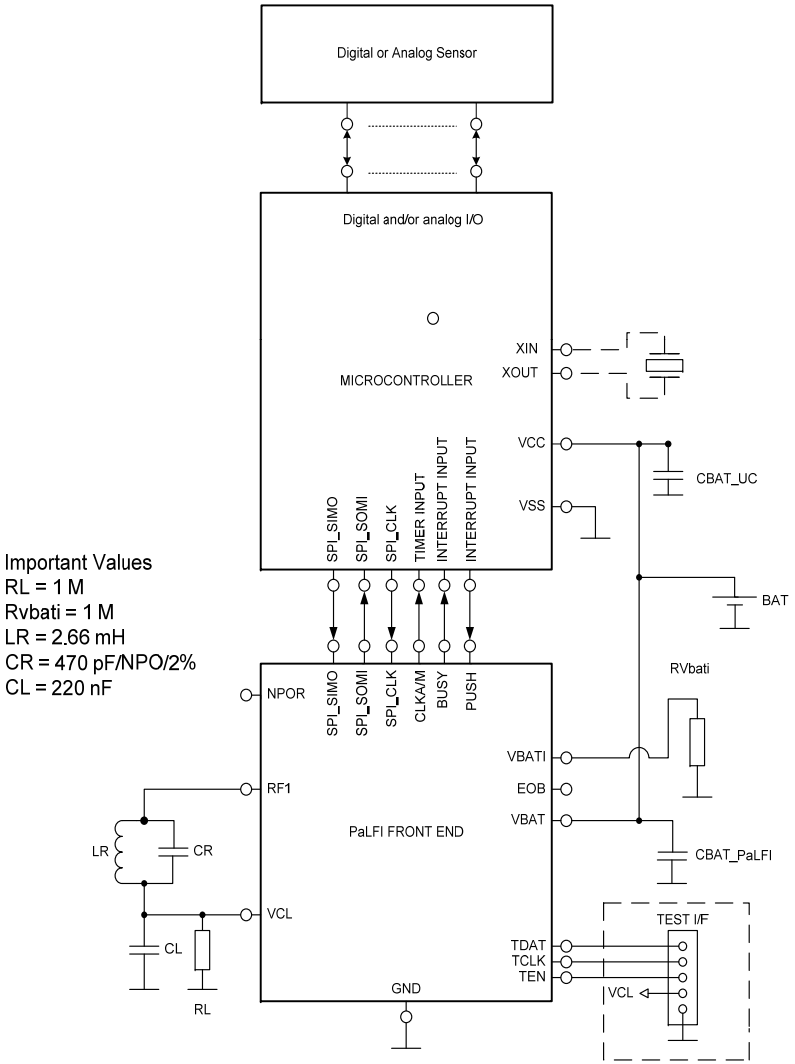

©2009 Cymbet All Rights Reserved

Semi Passive RF Tag Applications

- Cold-chain time/temperature monitoring
- Smart patches – medical
  - Blood glucose monitoring
  - Body temperature
  - Moisture, pH, oxygen
- Service tags
  - Equipment calibration and servicing indicators
- Low duty cycle real-time locating systems

©2009 Cymbet All Rights Reserved

Applications: Turning Passive Tags Into Semi-Passive Tags

- Passive PaLFI Functions
  - Data Logging, Line-End Programming, mailbox function, communication through MCU (read & write), passive wake-up via air or push button
  - Battery charge function
  - Secure and encrypted communication
- Semi Passive Tag Monitors Temperature Aberrations
  - Integrated power for tag allows for active temperature monitoring

Monitor temp. during shipment; read tag at destination

Semi Passive Tag

©2009 Cymbet All Rights Reserved

Energy Harvesting:
Solving the Energy Storage Problem…

- Energy can be harvested from almost any environment:
  - Light, vibration, flow, motion, pressure, magnetic fields, RF, etc.
- Energy Harvesting applications include:
  - Permanently powered wireless sensors,
  - Hybrid & Active RFID, data logging and access control
- Self-Powered Systems need reliable energy storage:
  - Energy Sources are not always available: (Solar @night, motor vibration at rest, air-flow, etc.)
  - Longer operating times – high-efficiency minimizes charge loss
  - Self-Powered allows remote locations & lower installation costs
  - High cycle life enables extended operation – fewer service calls
- Ideal solution is a highly-efficient, eco-friendly, energy storage device that can be cycled continuously for years

EnerChip™ EH modules allow designers to quickly adopt energy harvesting, save energy and improve performance

©2009 Cymbet All Rights Reserved

EnerChip EH is the Enabler of Autonomous Wireless Sensors

Self-Powered Sensor

Ambient Energy:
Motion, Vibration, Light, Temperature etc.

Cymbet's EnerChips provide these functions

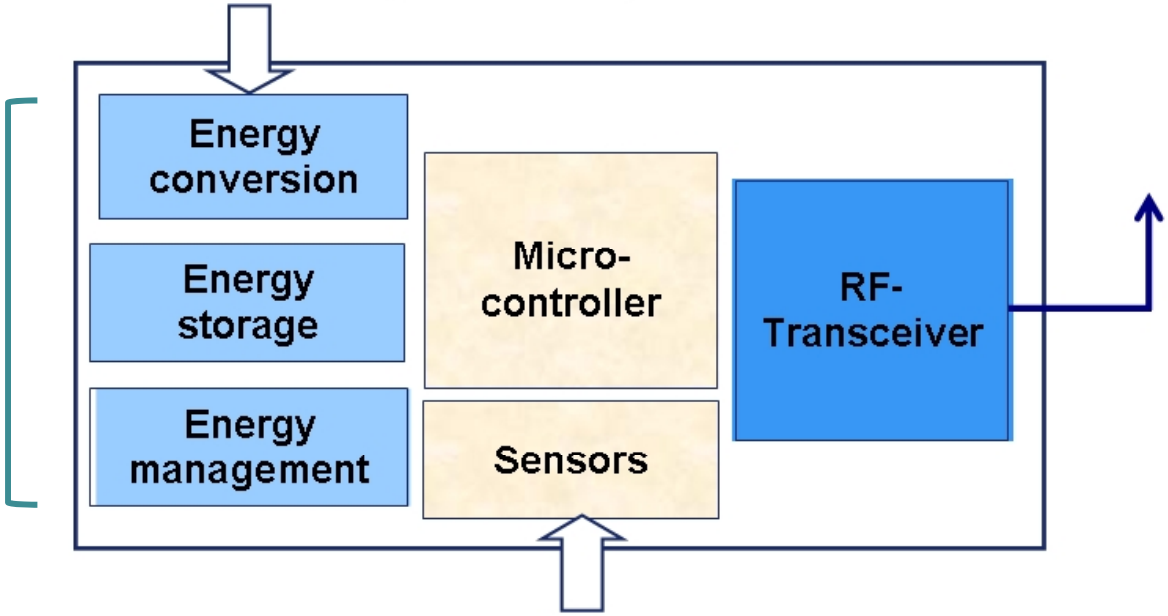

Temperature, Pressure, etc.

This could be co-packaged into a cost effective single chip solution!

©2009 Cymbet All Rights Reserved

CC430 Self Powered Weather Station

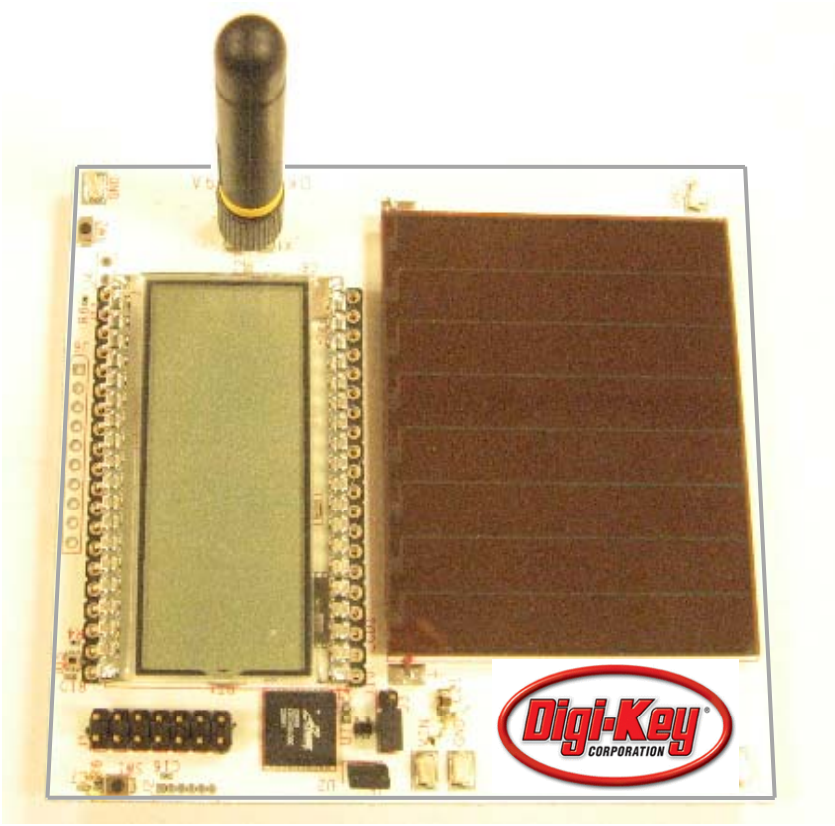

- New - CC430F6137 - MSP430 with Integrated RF Transceiver core
- EnerChip CBC3150 CC performing solar energy harvesting using ambient light
- Weather station transmits temperature, pressure, humidity and light level
- 900 MHz Operation supports up to 200 Meters Line of Sight Transmission without PA
- Completely self powered with EnerChip energy storage devices
- Never needs maintenance - no battery replacement
- Solar is on board, but other transducers could be easily adapted

©2009 Cymbet All Rights Reserved

CC430 Weather Station Demo
Top Level Schematic

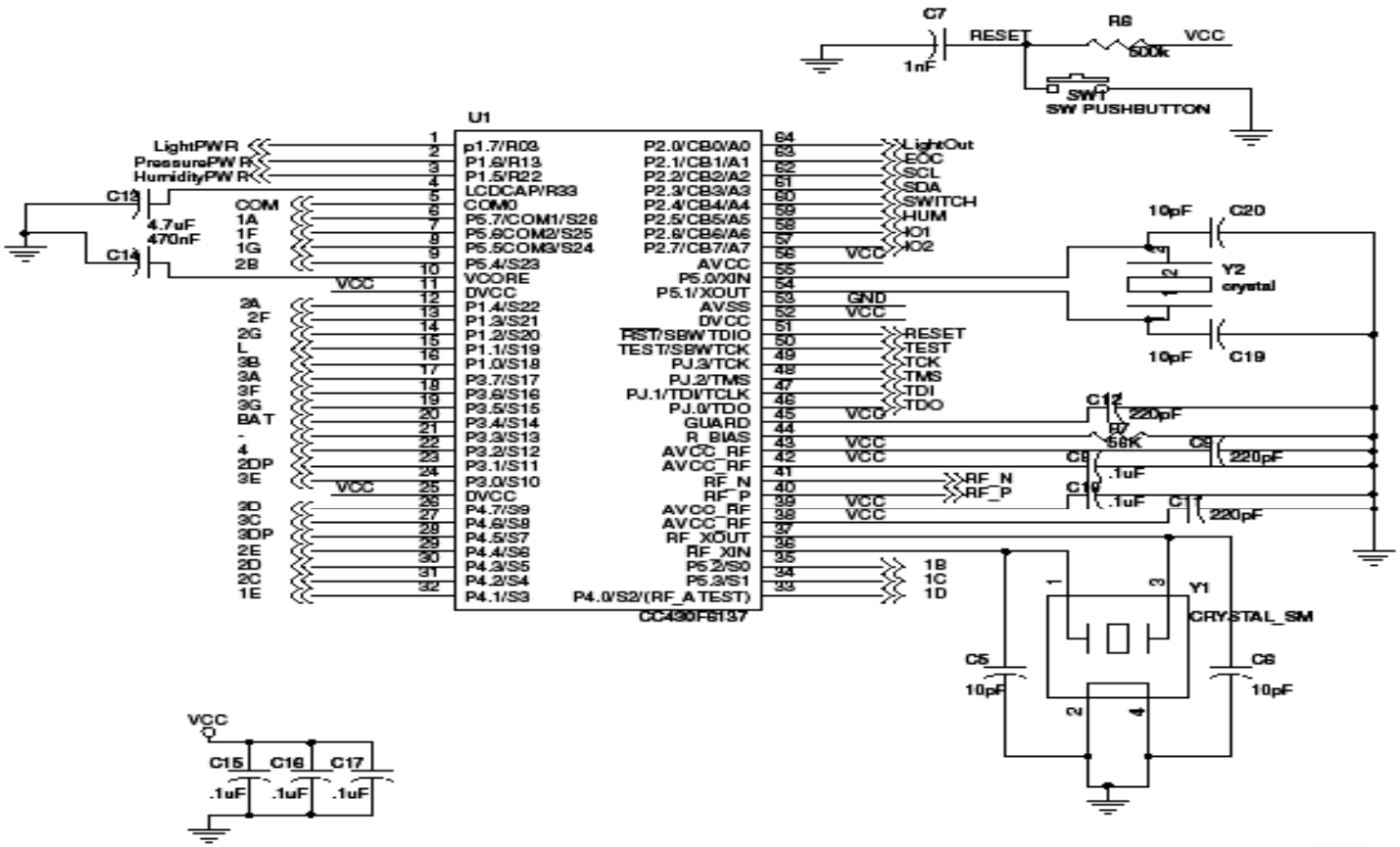

©2009 Cymbet All Rights Reserved

CC430 Weather Station Demo Schematics Cont.

Power MgMt/Storage

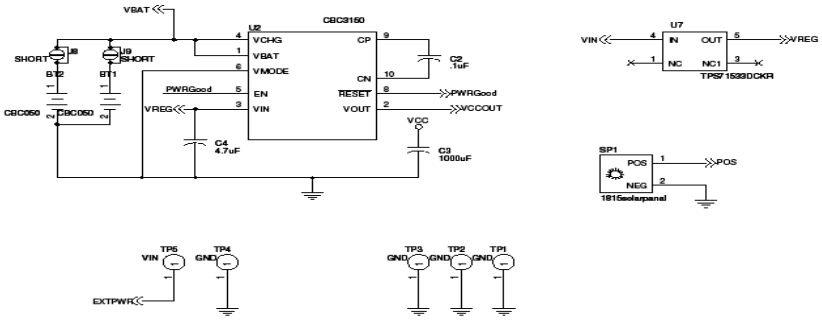

Sensor Interface

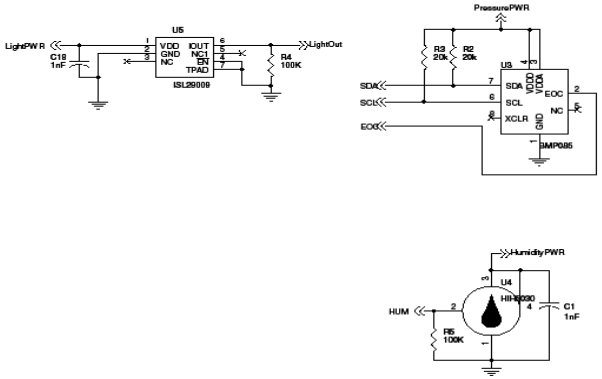

LCD

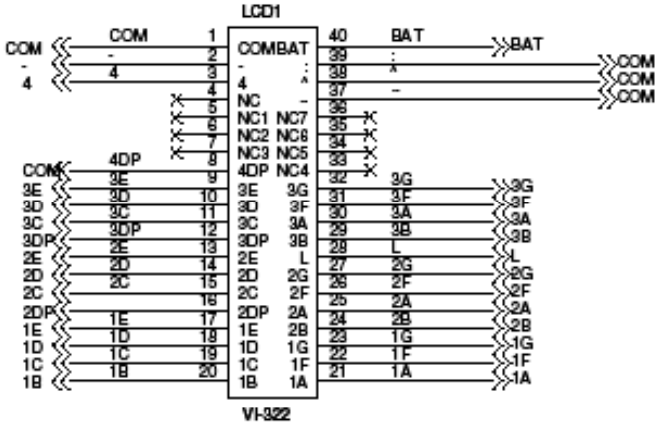

Antenna

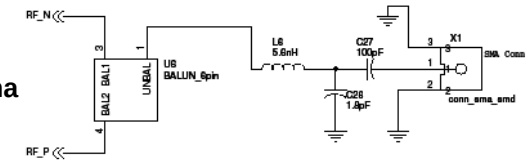

©2009 Cymbet All Rights Reserved

CC430 DC-DC Power Supply Example Schematic

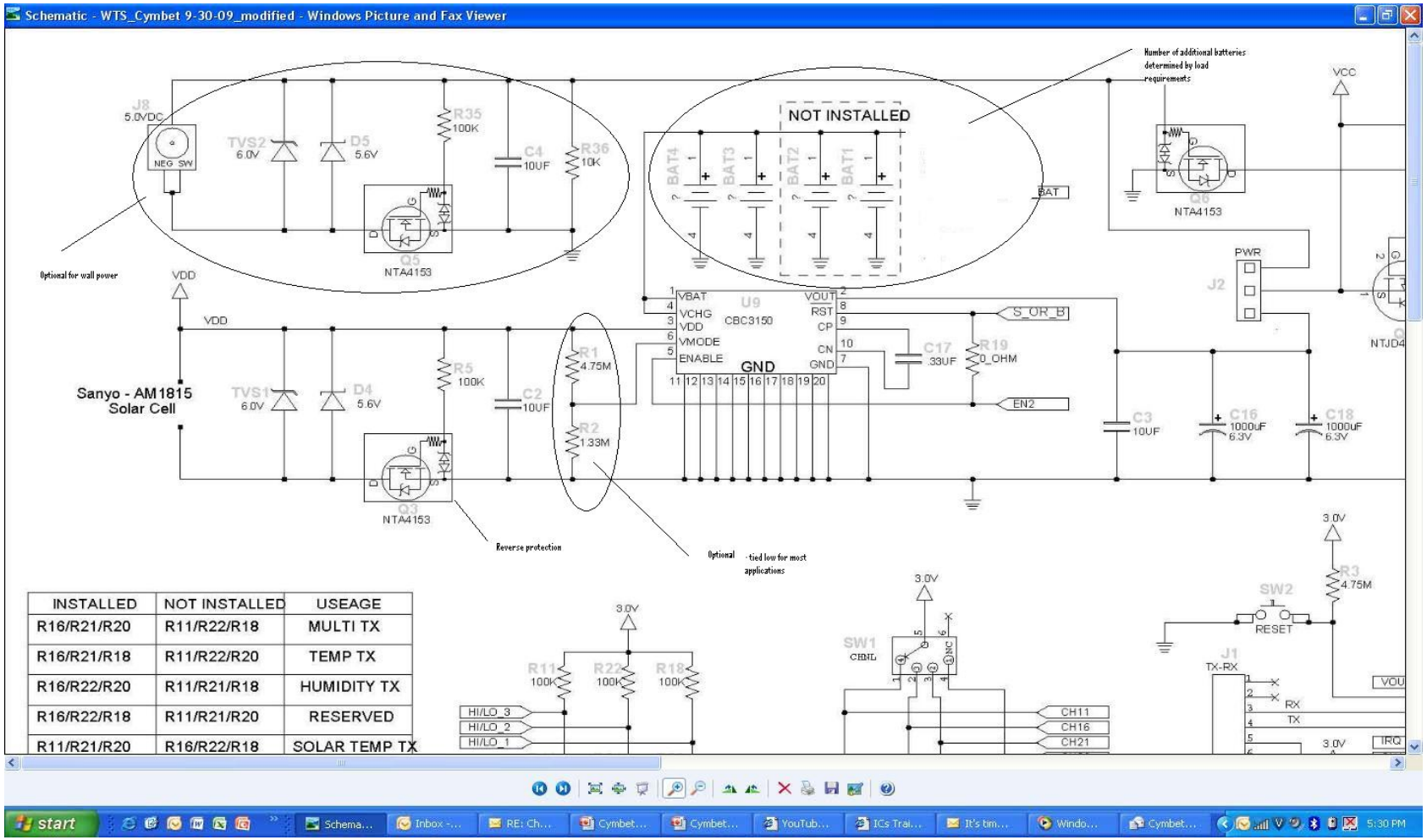

INSTALLED	NOT INSTALLED	USEAGE
R16/R21/R20	R11/R22/R18	MULTI TX
R16/R21/R18	R11/R22/R20	TEMP TX
R16/R22/R20	R11/R21/R18	HUMIDITY TX
R16/R22/R18	R11/R21/R20	RESERVED
R11/R21/R20	R16/R22/R18	SOLAR TEMP TX

©2009 Cymbet All Rights Reserved

DC-DC Power Supply Example using CBC3150

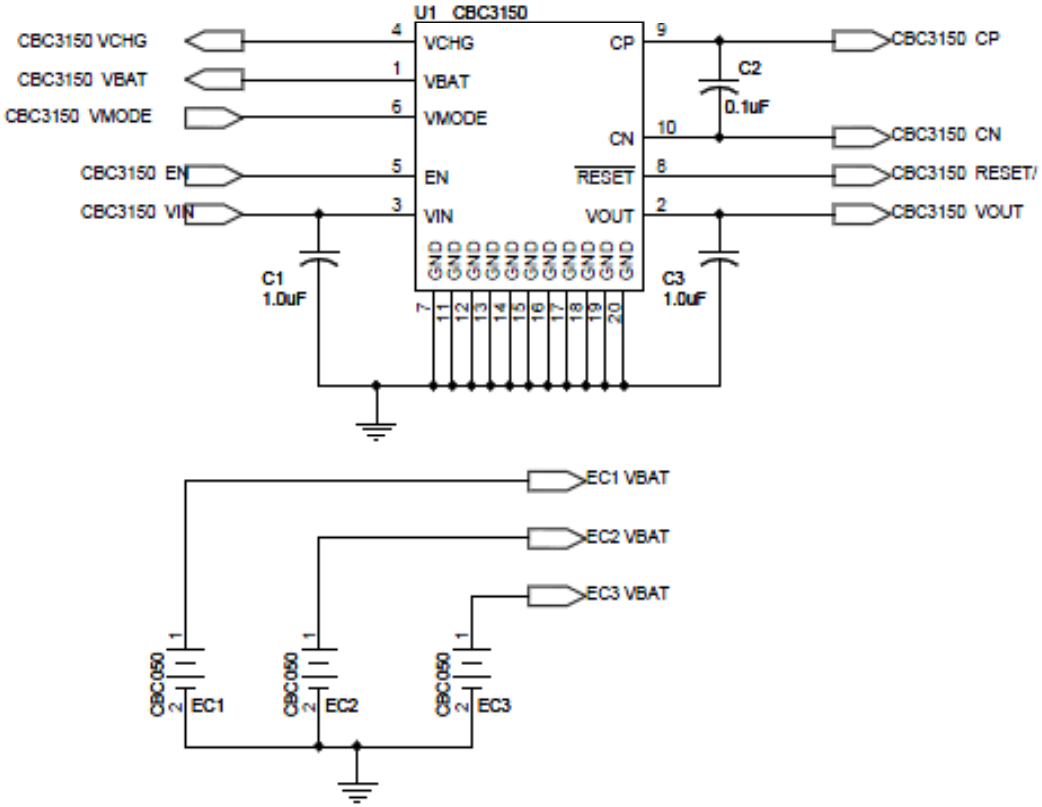

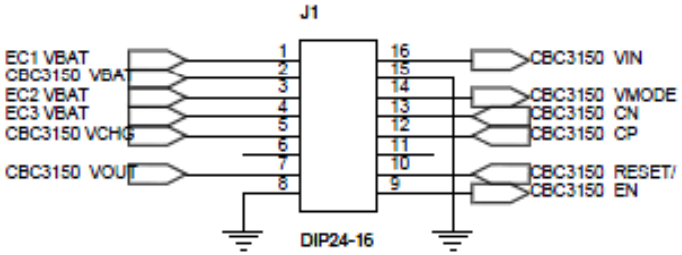

©2009 Cymbet All Rights Reserved

CBC3150 Theory Of Operation PWM Peak Power Tracking

Single Chip Solution for Peak Power Tracking

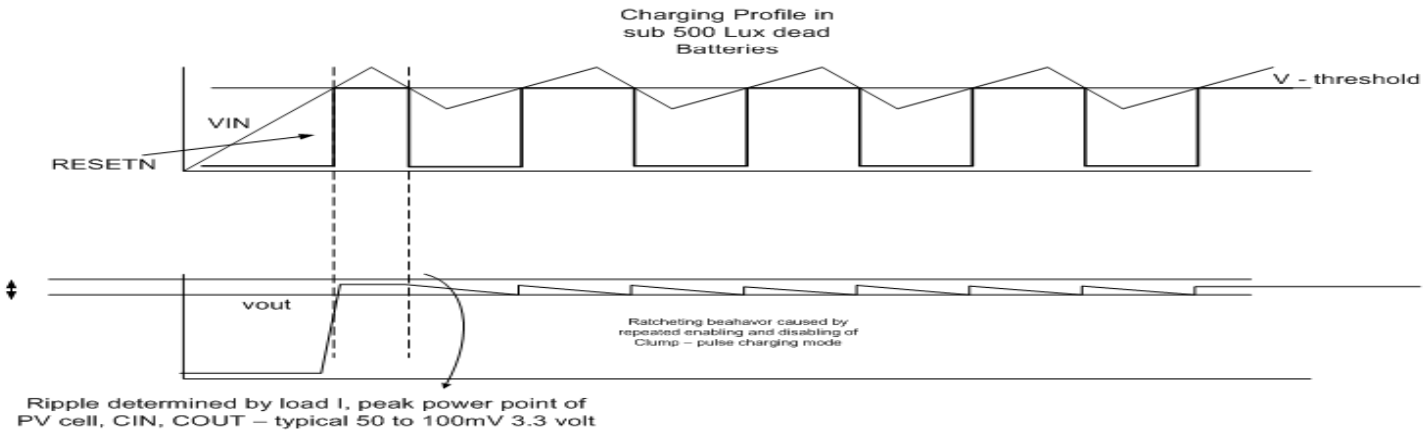

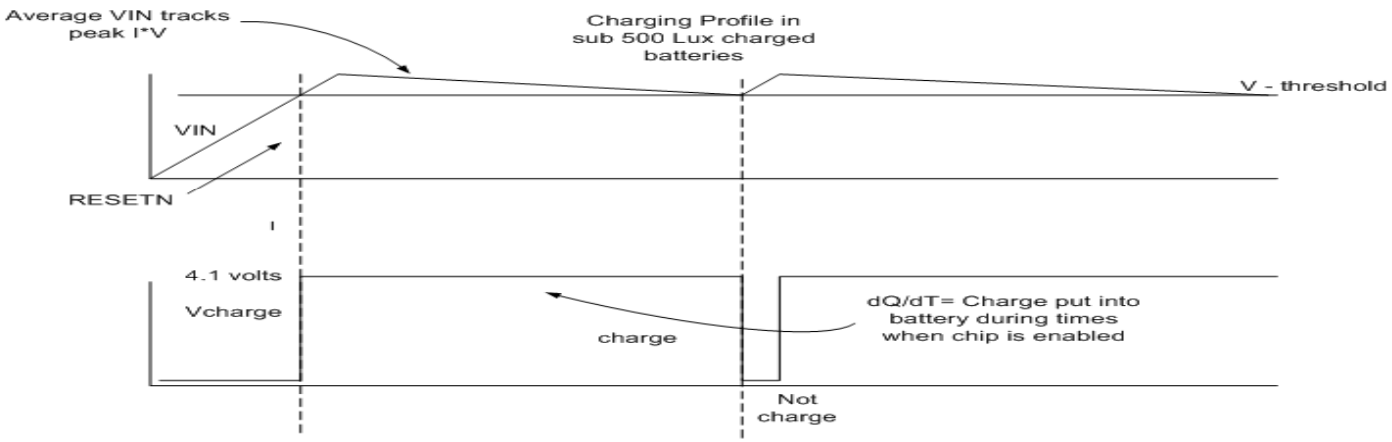

©2009 Cymbet All Rights Reserved

EnerChip Scope shot of VIN and VRESET in 1000 LUX – Dead Cell

VIN

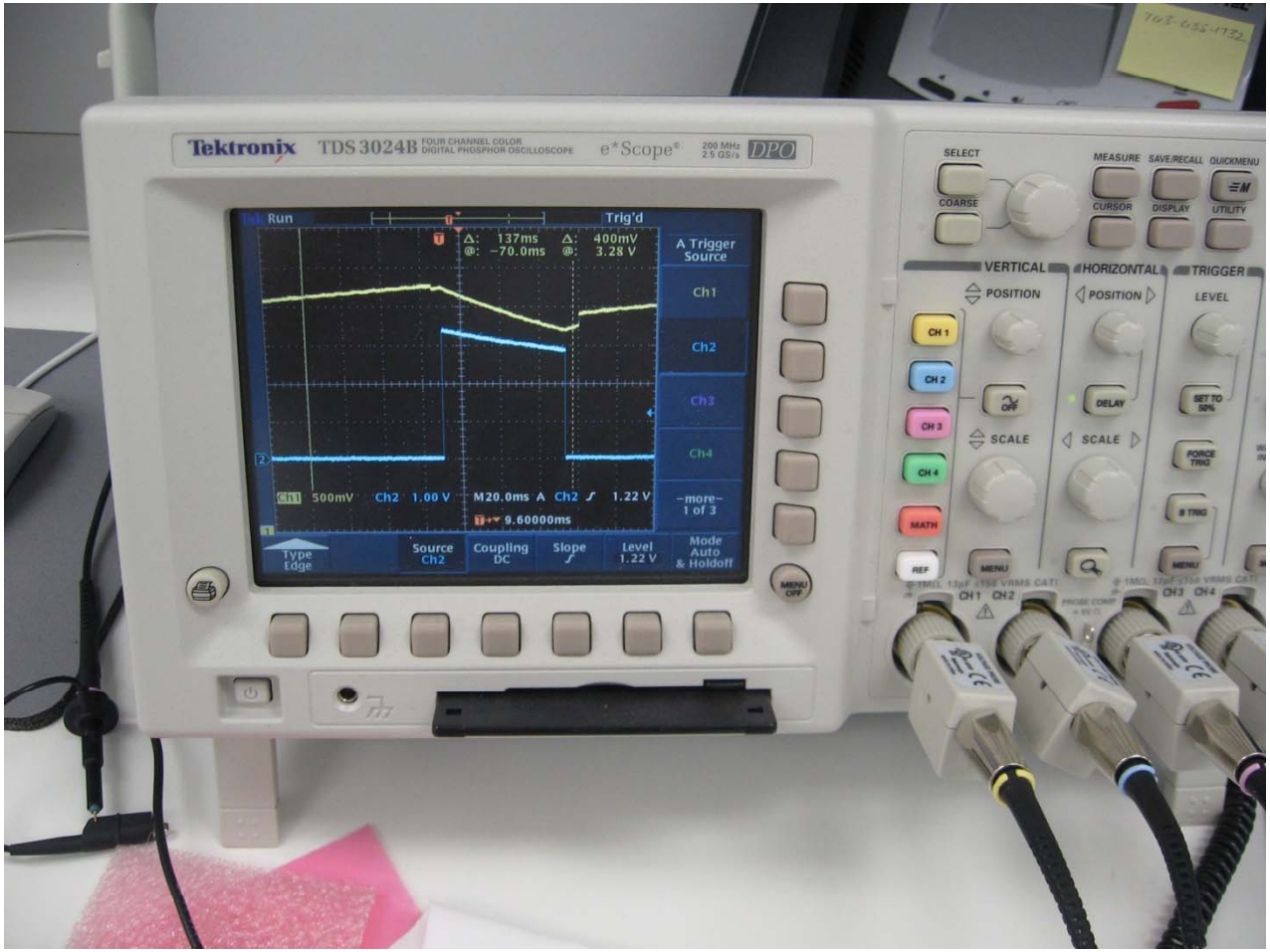

©2009 Cymbet All Rights Reserved

RESETN VIN Pulse Charging Waveforms

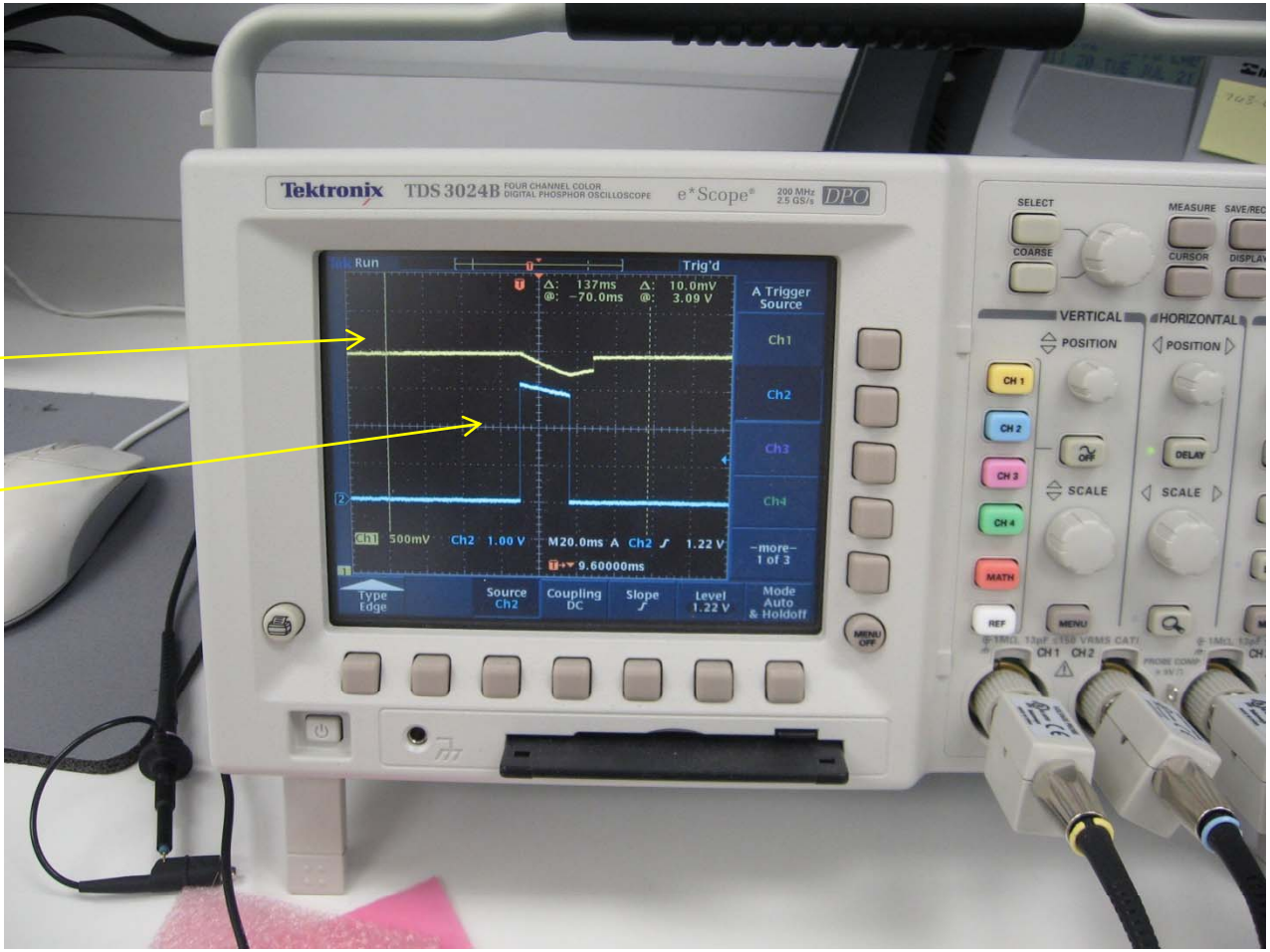

©2009 Cymbet All Rights Reserved

RESETN VIN Behavior Low LUX Level (sub 500 LUX)

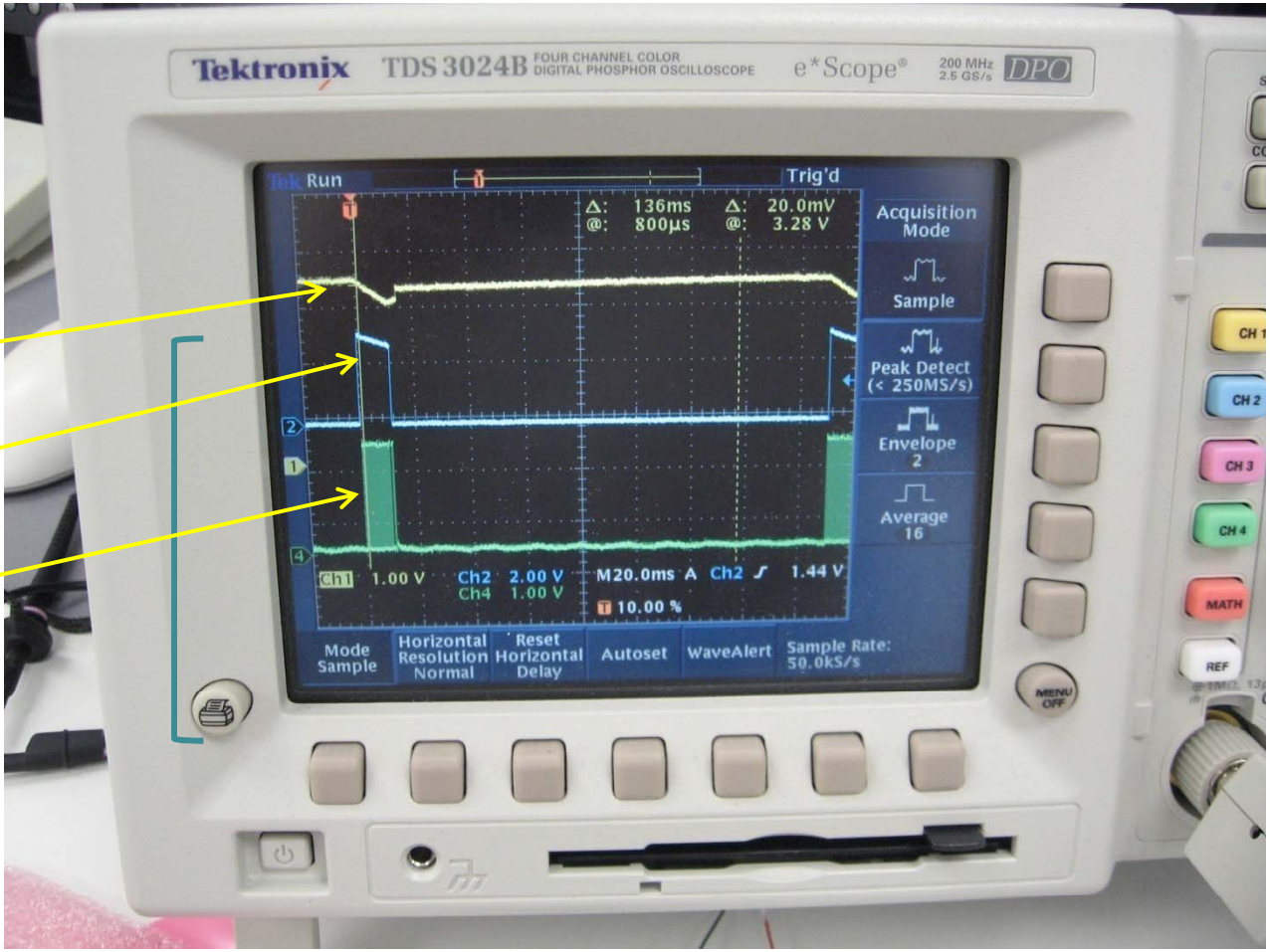

VIN

RESETN

CPUMP

©2009 Cymbet All Rights Reserved

RESETN VIN Behavior - Storage Device Charged

Flatlined DC High

VIN

RESETN

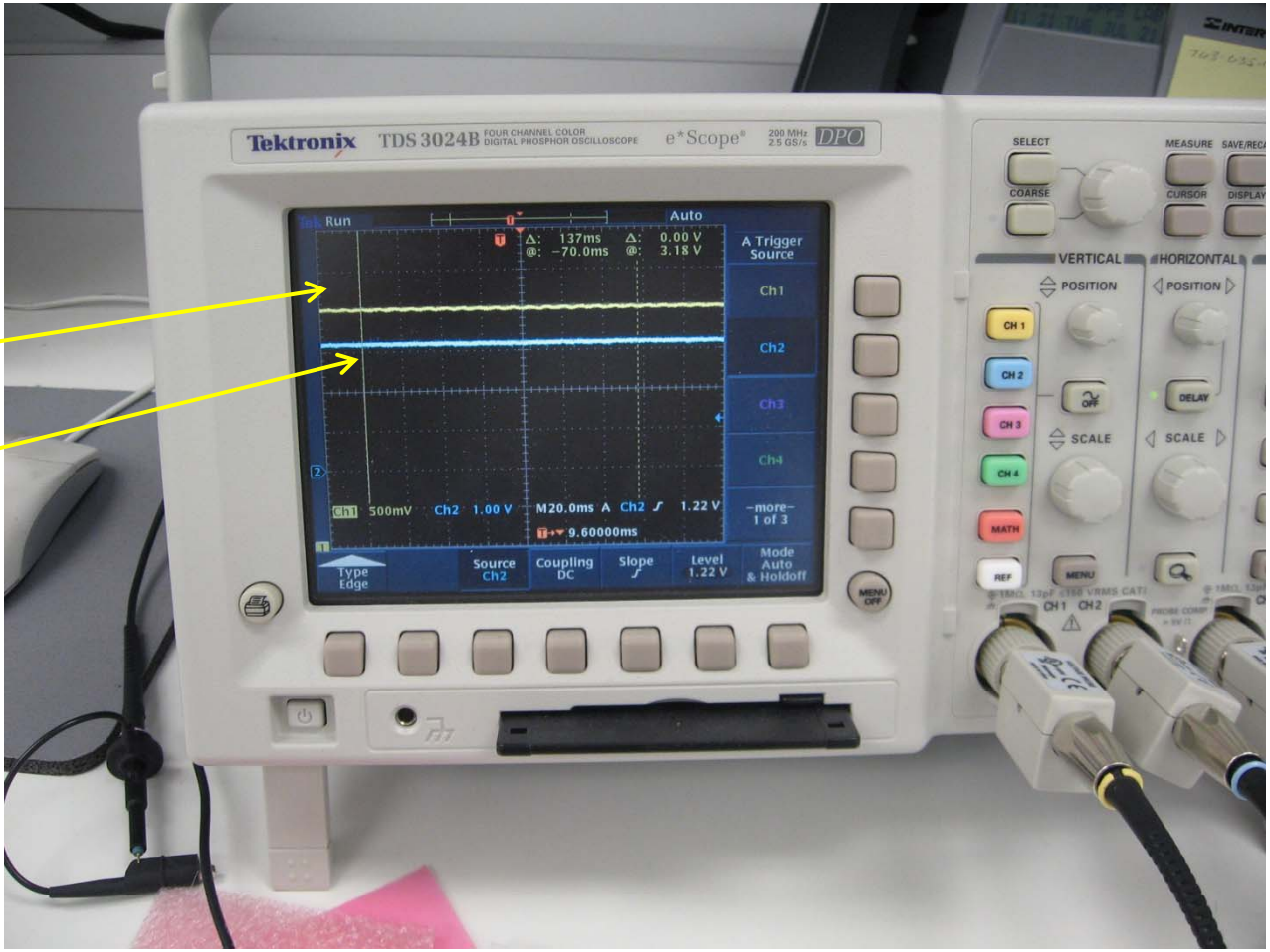

©2009 Cymbet All Rights Reserved

Thermal Electric Power Example

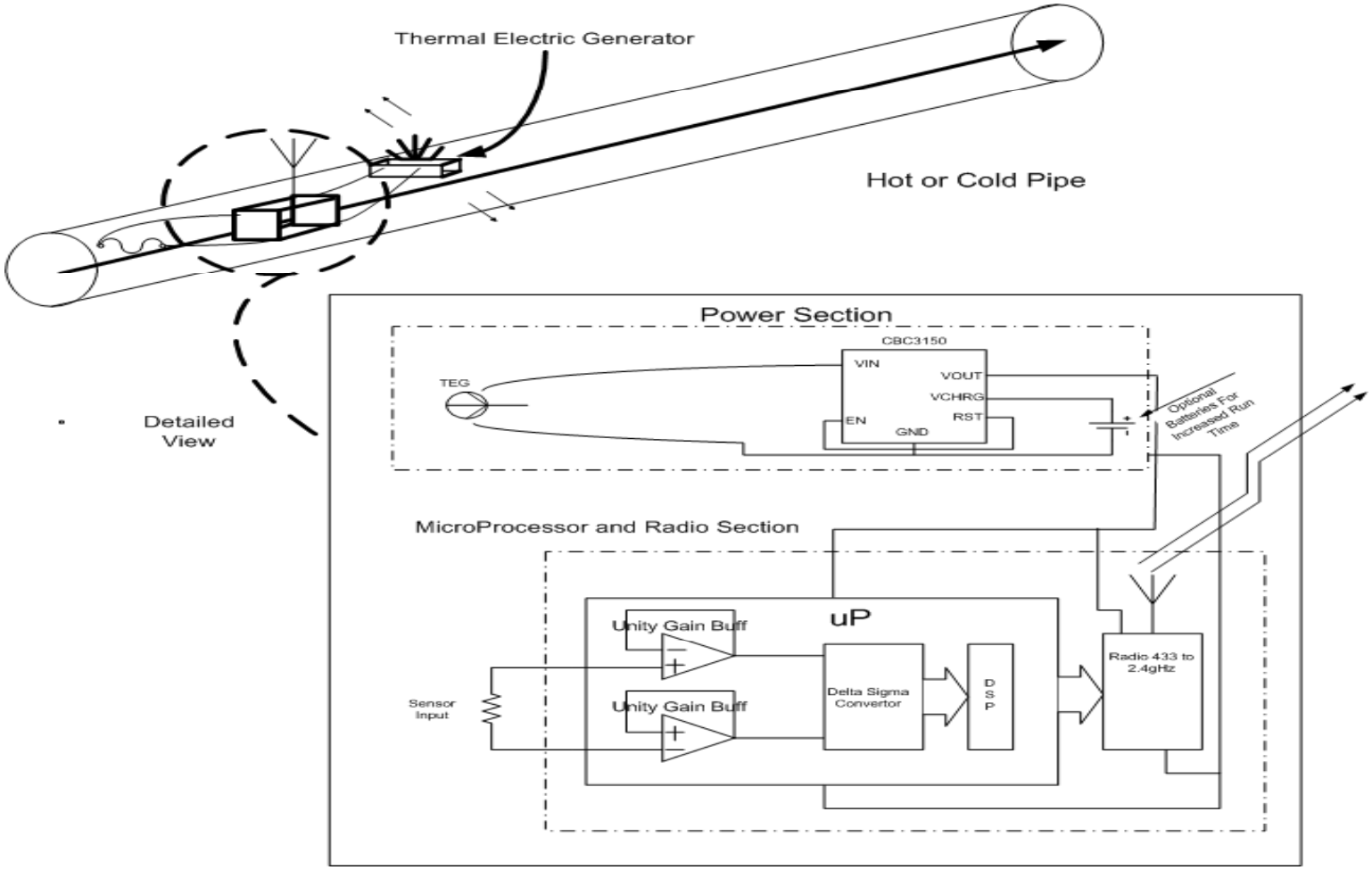

©2009 Cymbet All Rights Reserved

Thermoelectric Generator Example

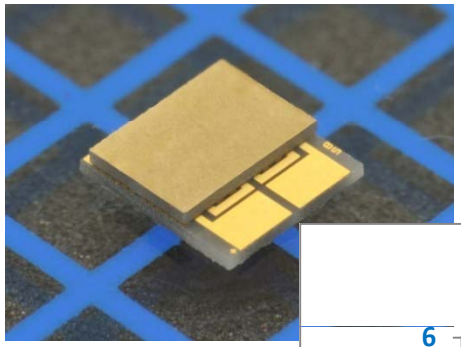

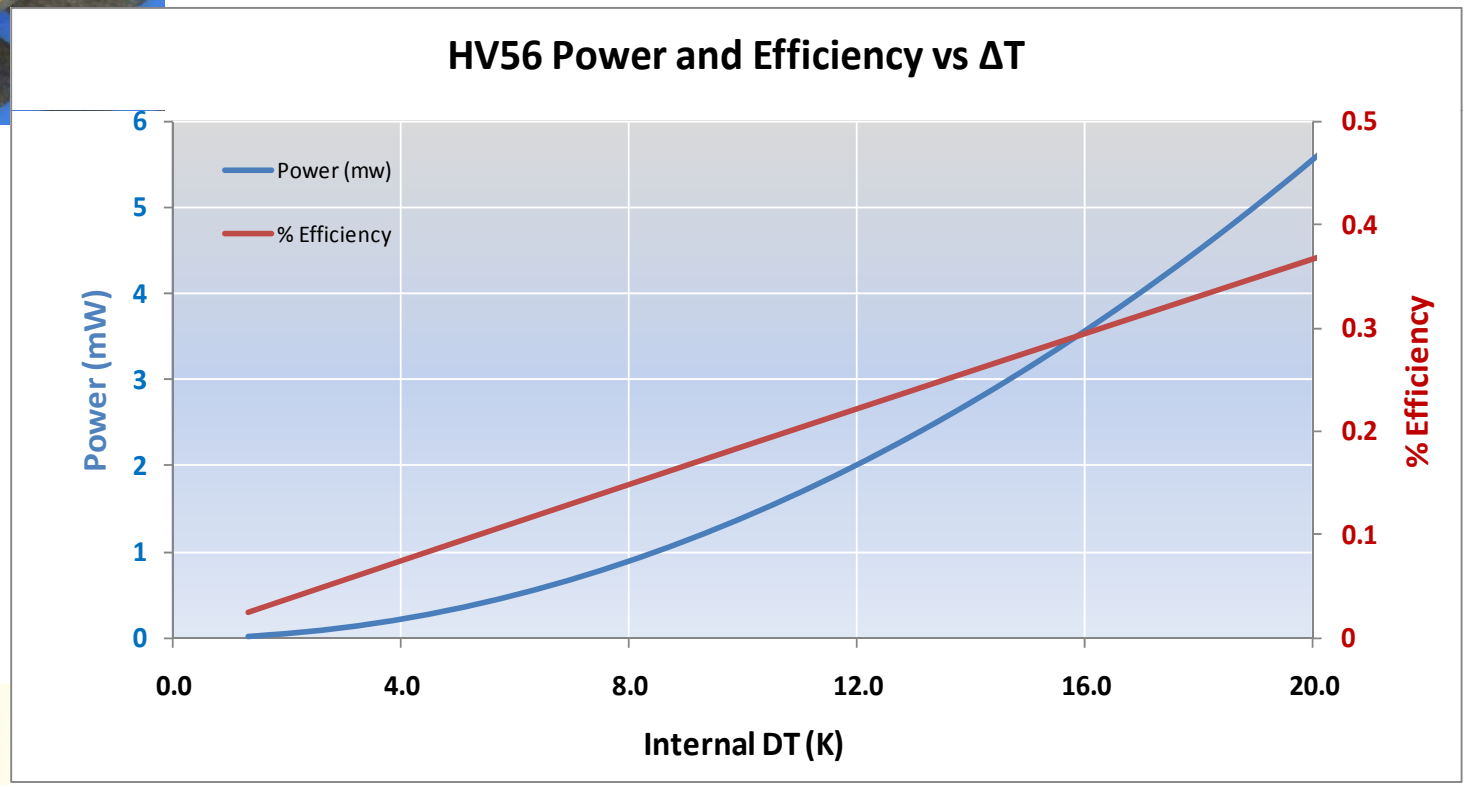

©2009 Cymbet All Rights Reserved

Energy Harvesting Power Module for Low LUX Apps

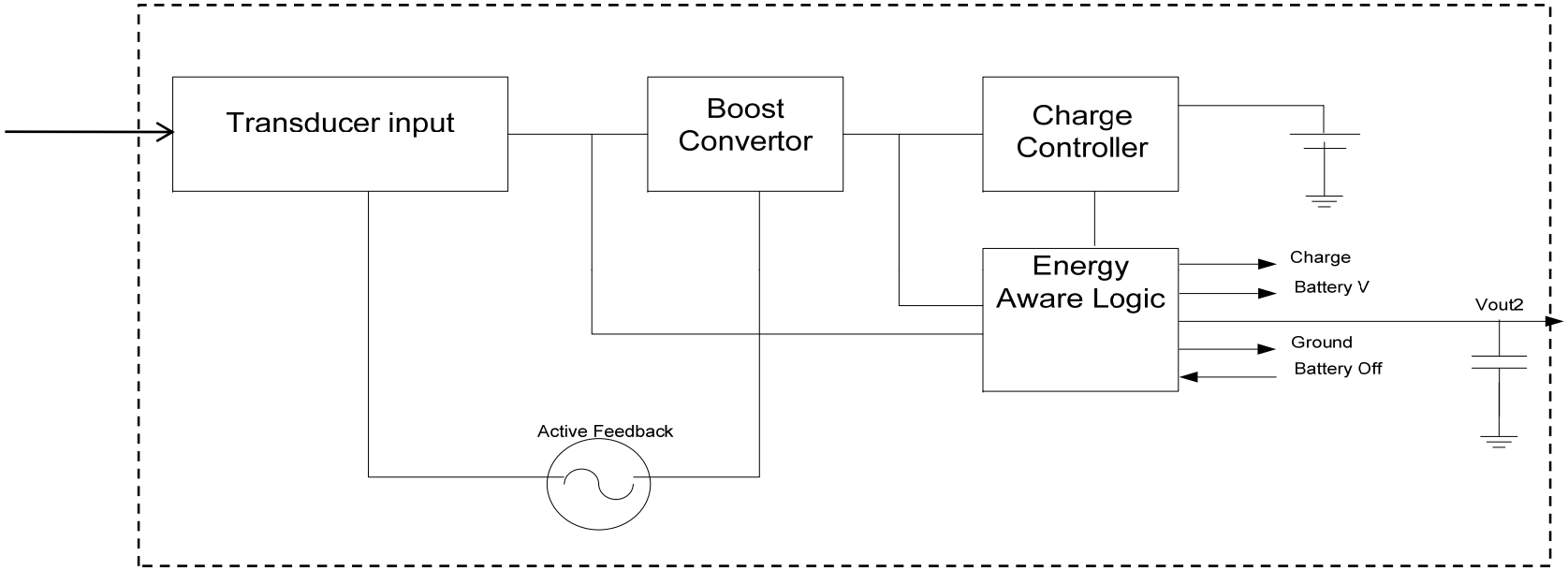

- I/O Pin Description:
  - Charge: Output - indicates that the batteries are being charged
  - Battery off: Input – disconnects battery from charger
  - Battery V: Output – raw battery voltage
  - Ground : output - ground
  - Vout2 : output – stepped down battery voltage for 3.3 volt systems

©2009 Cymbet All Rights Reserved

Solar EH Modules and Kits

- EnerChip EH Module – CBC5300:
  - Capacity = 100uAh, uses 2 CBC050s
  - Compatible with solar, inductive, piezo & thermoelectric transducers
  - No battery replacement or disposal; 10-year life
  - Provides control signals to enable “Energy Aware” sensor nodes
  - Low self-discharge enables high-efficiency
  - Order P/N: CBC5300-24C
- Solar Evaluation Board – EVAL-08:
  - Solar Energy Harvesting Demo Kit
  - Compact module with integrated solar cell array
  - Works in low ambient light:
  - Uses the EnerChip CBC5300
  - Adaptable to many sensors and wireless networks via Interface Header
  - Order P/N: CBC-EVAL-08

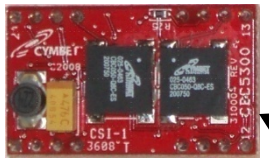

CBC5300 Module

Interface Header

©2009 Cymbet All Rights Reserved

Self-Powered Wireless Sensor:
TI eZ430-RF2500-SEH Evaluation Kit

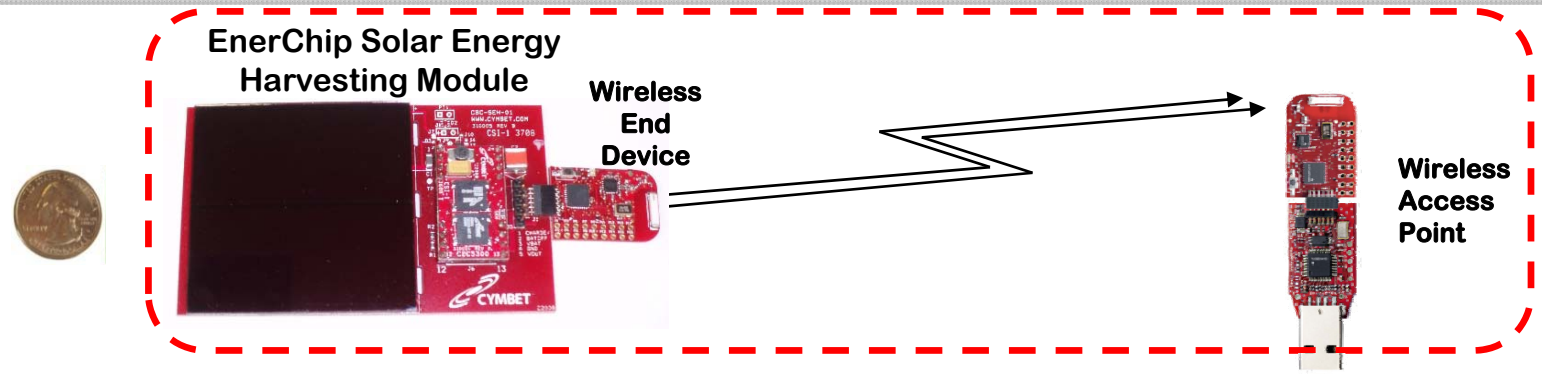

- Available as the TI eZ430-RF2500-SEH Evaluation Kit in January 2009
- Compact module with integrated solar cell
- Works in low light – down to 200Lux
- Low self-discharge enables high-efficiency
- No battery replacement or disposal; 10-year life
- Uses the EnerChip EH CBC5300 – Energy Harvesting Module
- CBC-EVAL-08 is Cymbet's version of Solar EH Board for generic Energy Harvesting designs

TI's eZ430-RF2500-SEH Evaluation Kit Contents

©2009 Cymbet All Rights Reserved

eZ430-RF2500-SEH
Electrical Characteristics

Parameter	Min	Typical	Units
Min input Lux	200		Lux
Full charge Lux	700		Lux
Load current (charging		20	uA
Load Current (not charging)		800	nA
Battery Charge Voltage		4.06	Volts
Battery Cutoff Voltage	3.0	3.3	Volts
UVLO Trip Select Voltage		0.7	Volts

©2009 Cymbet All Rights Reserved

Transducer Interface & Tuning

- Energy Harvester Tuning:
  - Optimized for 50 to 4000 ohm impedance
    - Voltages at that impedance should be between 270mV to 1.5V
  - Nominal voltage and impedance is 800mV at 1000 ohms (min = 700mV)
- Find Transducer Peak Power:
  - Some manufactures will provide operating characteristics
  - To find the peak power:
    - Place a variable resistor across the transducer
    - Monitor voltage and current in resistive load
    - Sweep the variable resistor until you find the peak I*V
    - This resistance is the ideal impedance for the energy harvesting module for peak power transfer
- Tune the energy harvesting module:
  - Find the optimal operating voltage for the transducer
  - Match the impedance for the transducer to the input stage

©2009 Cymbet All Rights Reserved

Energy Harvesting Transducers

EnerChip works with all…

Energy Source	***Challenge***	***Estimated Power*** *(in 1 cm³ or 1 cm²)*
Light	**Conform to small surface area** **Wide input voltage range**	**10µW-15mW** **(Outdoors: 0.15mW-15mW)** **(Indoors: <10µW)**
Vibrations	**Variability of vibration**	**1µW-200µW** **(Electrostatic: 50µW-100µW)** **(Electromagnetic: <1µW)**
Thermal	**Small thermal gradients**	**15mW** **(30°C gradient)**
Piezoelectric	**Capturing pressure or motion**	**~ 200µW**
RF & Inductive	**Coupling & rectification**	**Various**

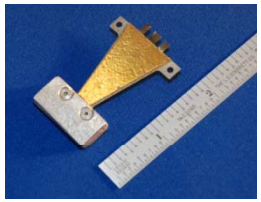

AdaptivEnergy – JouleThief™

Solar - Various

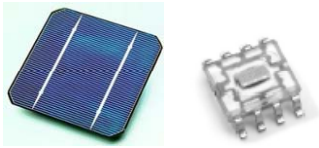

Thermoelectric - Nextreme

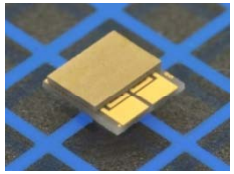

Source: EE Times

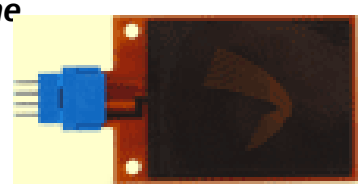

MIDE – Volture™ Piezo

©2009 Cymbet All Rights Reserved

Typical Low Power Transceiver

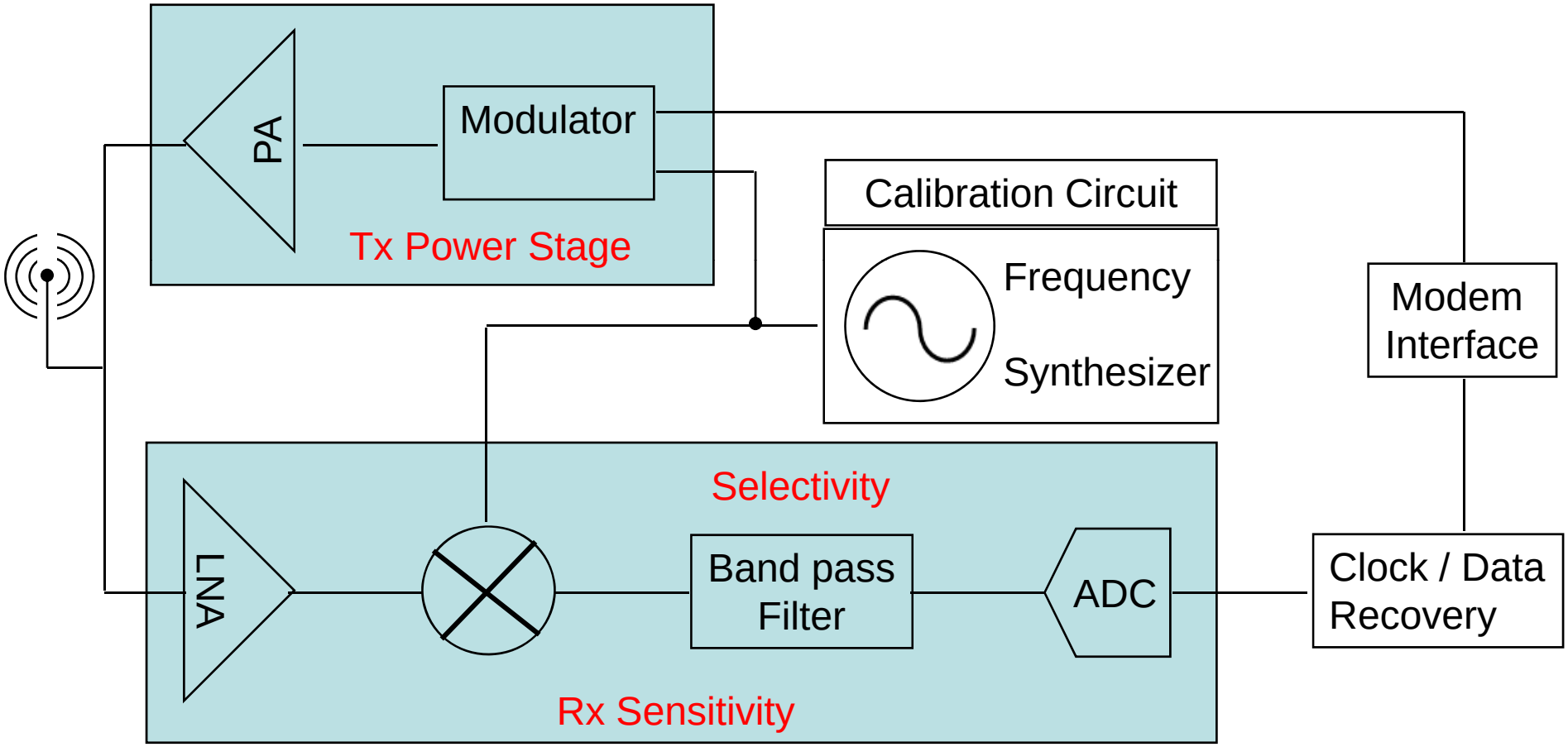

©2009 Cymbet All Rights Reserved

Wireless Transceiver Power Usage

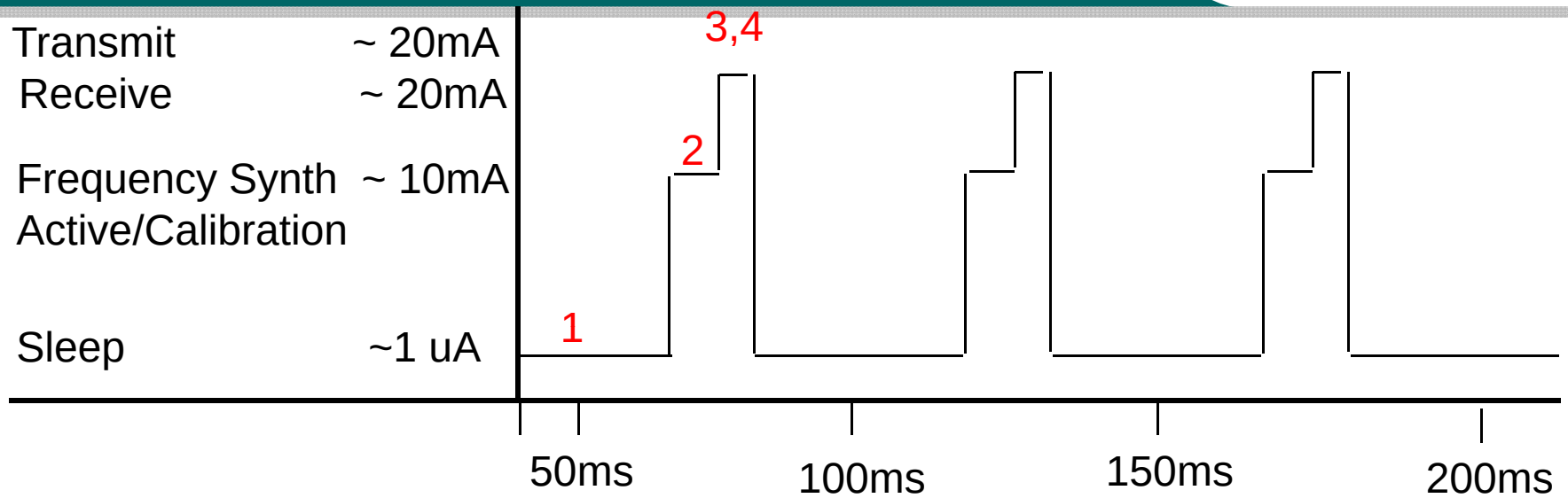

1. Sleep current is an important number, but as important is the time in the duty cycle the transceiver is in the sleep mode
2. The Frequency Synthesizer's low power performance is measured in the settling time from sleep mode and how well it retains it's accuracy (fewer calibration cycles required).
3. Receive Polling is a nice feature in a transceiver as long as the polling period is adequate to pick up the network's messages.
4. Transmit and Receive require the highest power usage. Network and data payload settings in the user's application can drastically effect power.

©2009 Cymbet All Rights Reserved

Calculating Energy Usage per Transmission

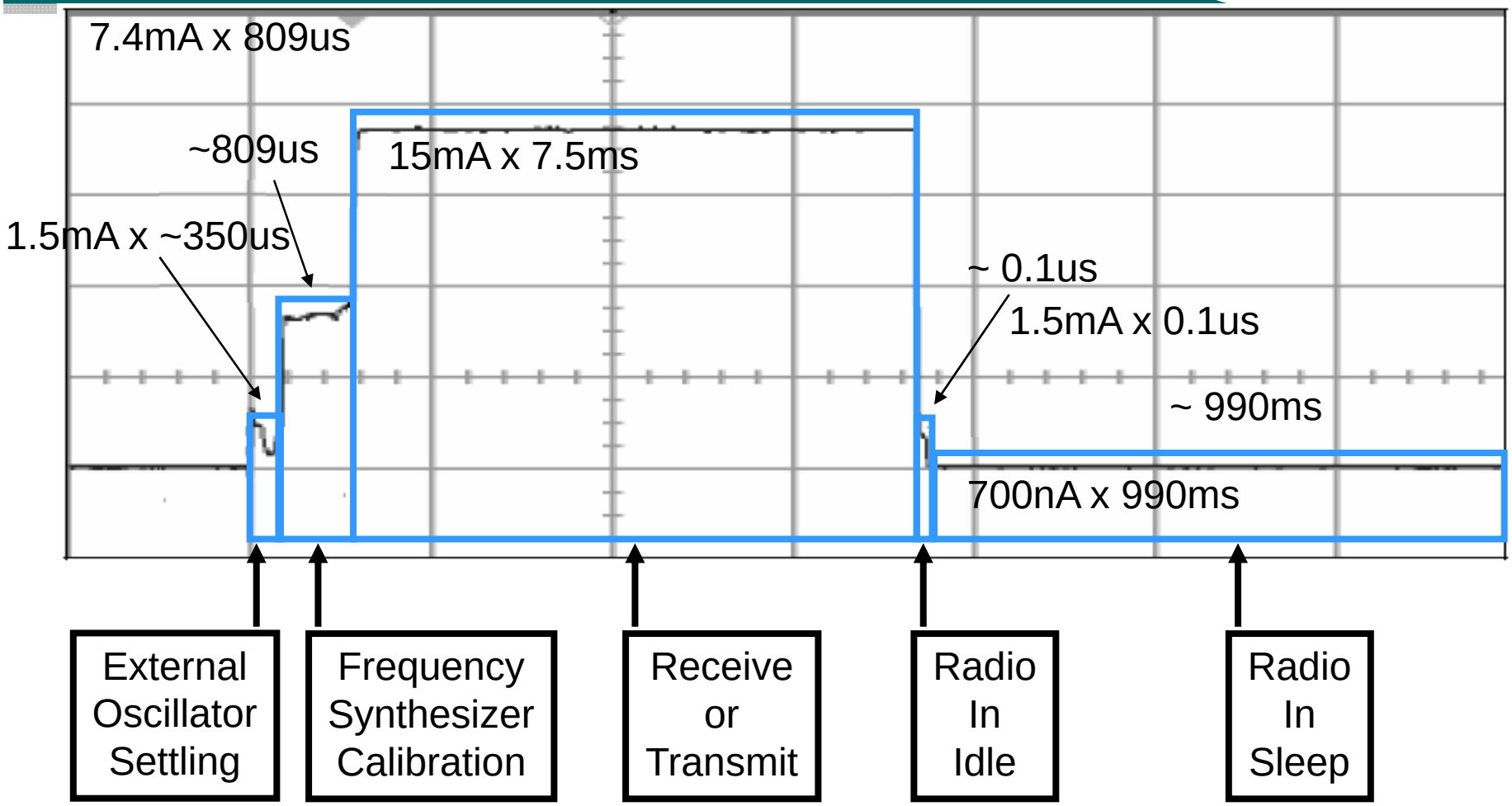

145pA Hr **+ 1.67nA Hr** **+ 31.25nA Hr** **+ 41.6fA Hr** **+ 192pA Hr = 33nA Hr = 392 uJoules**

©2009 Cymbet All Rights Reserved

Pulse Capacitor Requirements

- Sizing of output capacitor depends on several factors:
  - Battery impedance
  - Battery voltage
  - Temperature
  - Pulse current amplitude
  - Pulse current duration
  - Allowable voltage drop during discharge
- Calculating output capacitor size:
  - C = t / R * [-ln (Vmin / Vmax)]
    - C= output capacitance
    - t = pulse duration
    - R= load resistance = Vout(average) / Ipulse
  - Vmin and Vmax are dependant on the minimum operating voltage of the external circuit
- Charge time determines maximum duty cycle:
  - Charge formula: t= R * C [- ln (1 – Vmin / Vmax)]
    - T = charging time
    - R = battery resistance
    - C = output capacitance

©2009 Cymbet All Rights Reserved

Pulse Current & Voltage Profiles During RF Transmissions

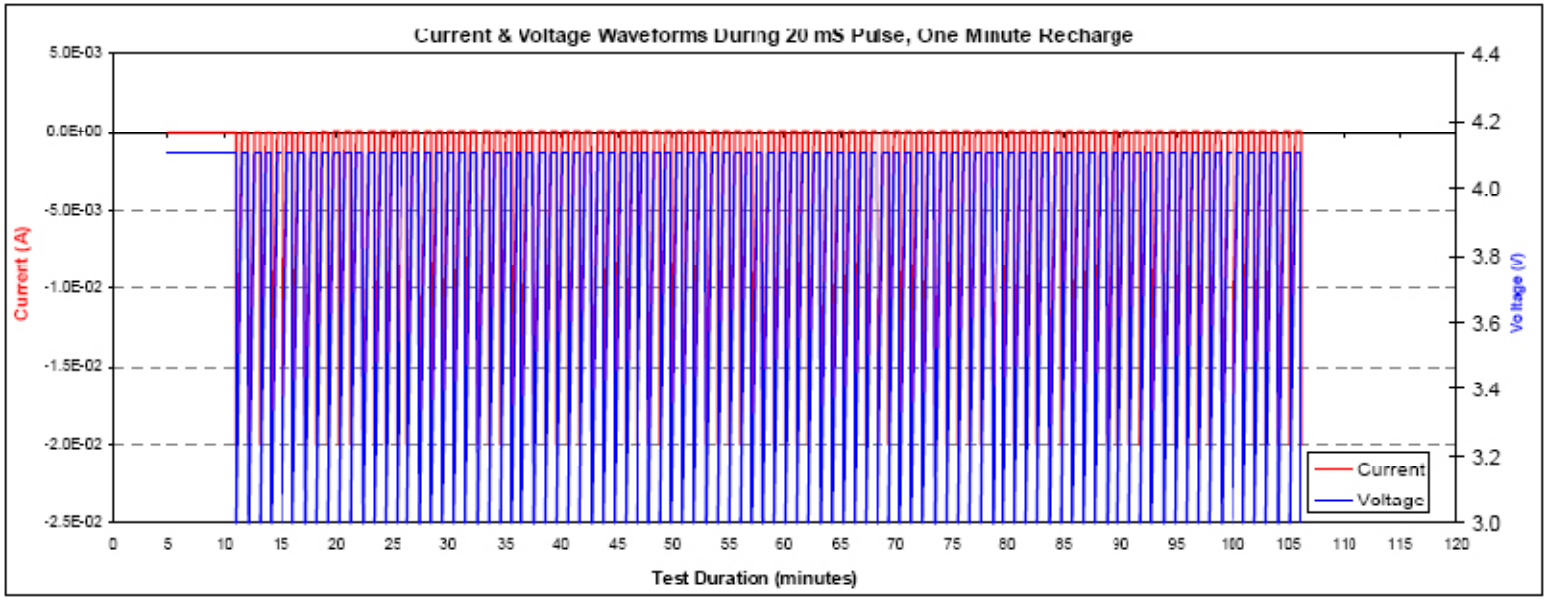

©2009 Cymbet All Rights Reserved

Applications: Wind Turbine Stress and Fatigue Monitoring

Radio transmits data to controller

Piezo or Solar element in each blade

See footage of windmill destroyed:

http://www.youtube.com/watch?v=CqEccgR0q-o&feature=related

©2009 Cymbet All Rights Reserved

Applications: Industrial Sensing

- Electric Motor Sensor:
  - Utilizes Energy Harvesting, Wireless Networking & Mixed Signal microcontroller & temperature sensor
  - Piezo Transducer converts vibration to energy to power sensor system and recharge the Cymbet Battery
  - MSP430 monitors bearing temperature & reports to access point
  - Uses SimpliciTI protocol for connection
  - EnerChip provides power to sensor when Vibration stops

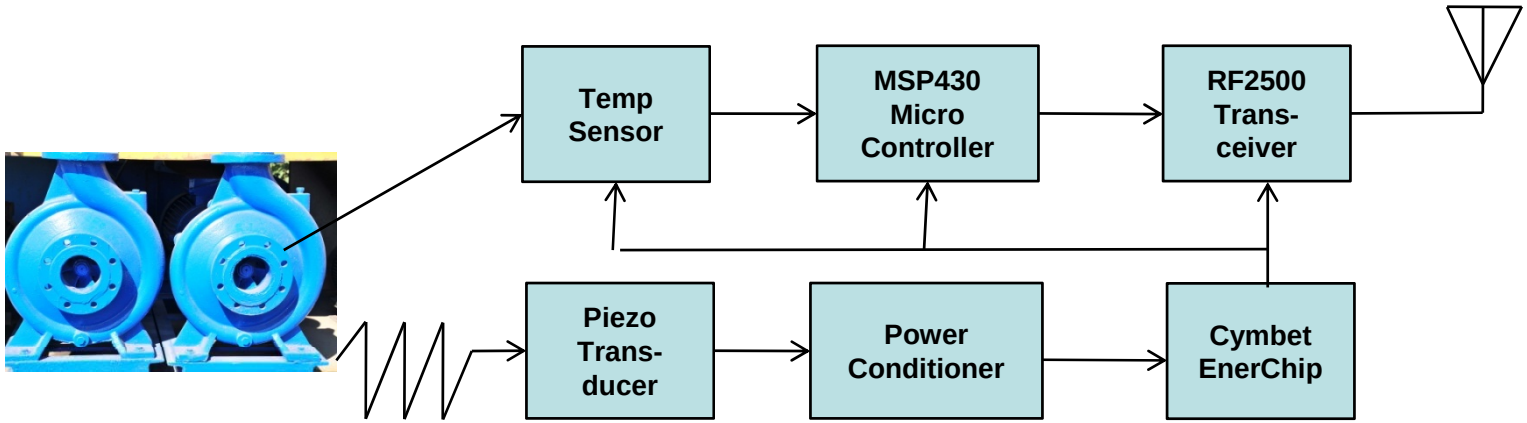

©2009 Cymbet All Rights Reserved

Applications: Alarm Systems

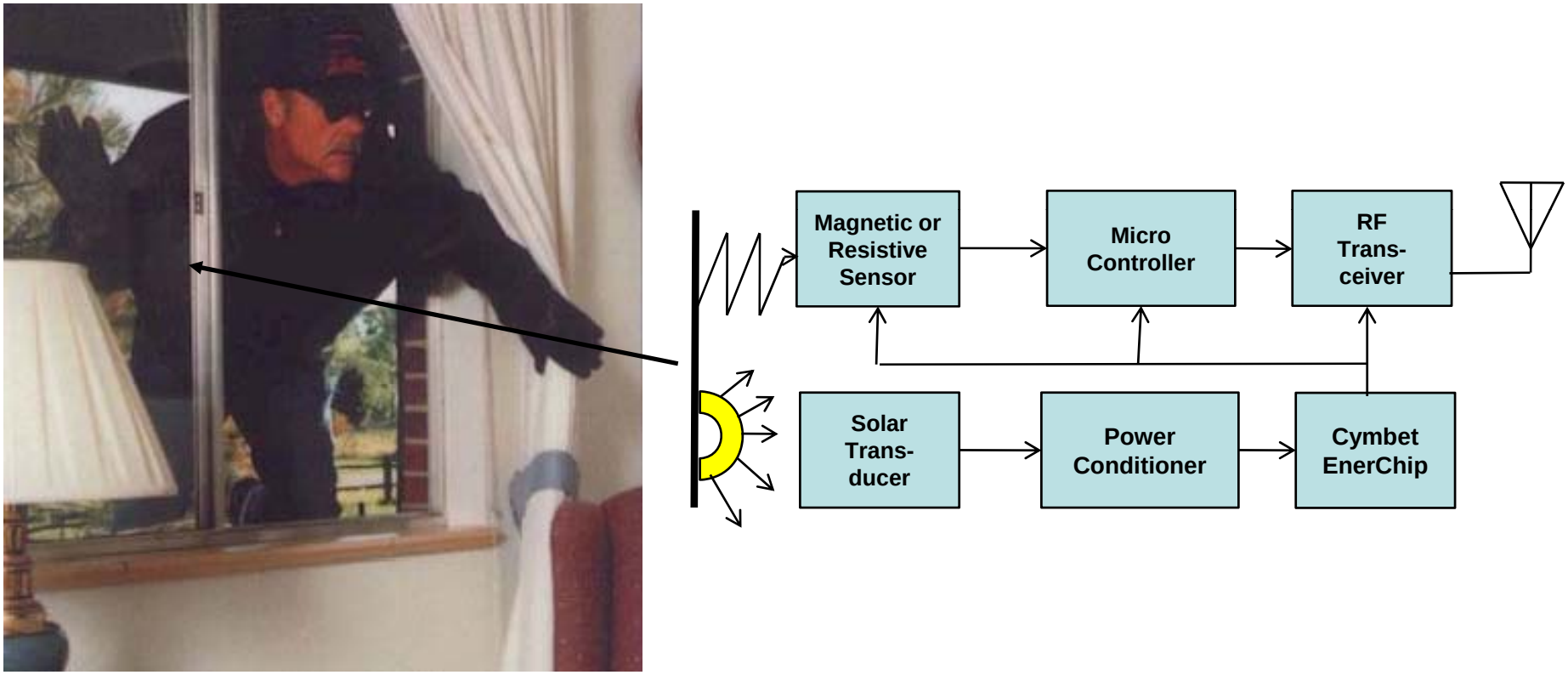

©2009 Cymbet All Rights Reserved

Applications: Bridge Fatigue Monitoring

- Stress and Fatigue Monitoring Bridge Decks:

Gusset Plate

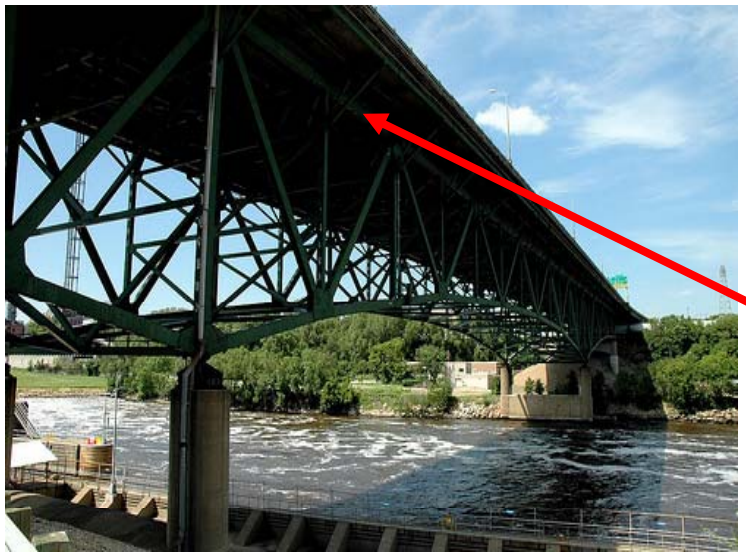

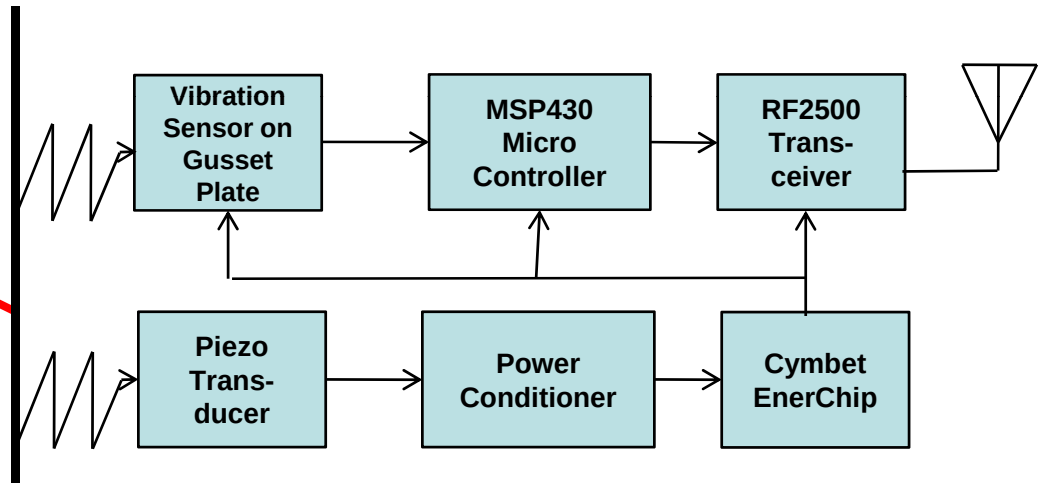

©2009 Cymbet All Rights Reserved

Applications: Medical Monitoring

- Wireless Patient Monitoring:
  - Rechargeable micro-power source powers wireless sensors
  - Eliminates wires & battery replacement

- Patient ID & Tracking:
  - Small size enables Active-RFID & RTLS
  - Utilize near-field recharging

- Smart Patches & Dressings:
  - Administer medicine & monitor wound condition -temp, moisture, PH, etc.

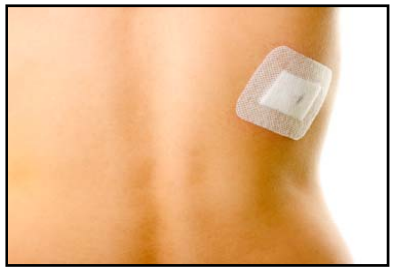

©2009 Cymbet All Rights Reserved

Applications: Business and Home Energy Management

- HVAC sensors – occupancy, temp, humidity, CO2
- Lighting Controls – Window light, room light, shade controls
- Security – occupancy, intrusion detect, motion sensors, noise sensors, proximity, etc.
- Utility monitoring, meter reading & off-peak control

Example: Wireless Lighting Control

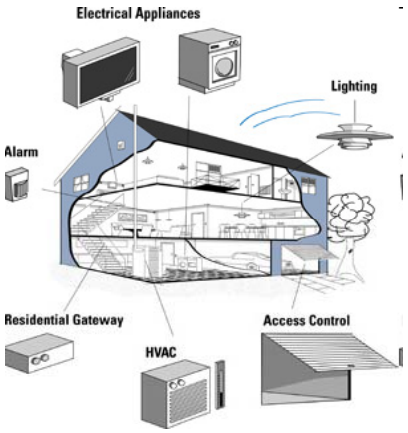

Example: Home Automation

- Applications:
  - Building Energy Management Systems
  - Access and Security
  - Systems Integrators
  - Home Networks
  - Smart Utility Meters

©2009 Cymbet All Rights Reserved

Energy Harvesting Summary

- Lower Cost Transducers and energy storage enable cost effective energy harvesting:
  - Solar
  - Piezo
  - Generators – spinning vanes – air – fluid - gasses
  - Thermal Electric
  - RF induction

    CBC012 & CBC050 = Available Now
- Make your system "Energy Aware"
  - This will enable the most efficient use of available energy
  - Peak Power tracking and power factor correction designs will be the most efficient design

©2009 Cymbet All Rights Reserved

Summary

- The EnerChip is the next advancement in rechargeable micro-power sources:
  - Improved performance & new functionality
  - SMT Assembly, Reflow tolerant, & RoHS
  - Lower environmental impact
  - New approach to distributing energy at the chip, board and sub-system level

- Energy Harvesting is enabled by advanced energy conversion, energy storage and power management devices and algorithms.
- EH Eval Kits are available at Digi-Key and Mouser
- Customer online tools at cymbet.com:
  - Application Notes, Datasheets, White Papers, Product Overviews

©2009 Cymbet All Rights Reserved