bqTESLA™
Wireless Power Solution

bqTESLA™ Solution

Wireless Charging Technologies

- **Wireless power is a transfer of energy between a power transmitter (charger base) and a receiver (end equipment) without connectors**

- **Different Technologies exist and have different characteristics**
  - Conductive **– requires physical contacts, delivers watts of power (e.g. Wildcharge)**

  - RF **– contact-less, early stage, not commercialized, delivers milliWatts of power (e.g. Powercast) several watts in a Faraday cage**

  - Inductive **– contact-less, delivers across the power spectrum from milliWatts to Kilowatts. Commercialized at different power levels (e.g., eCoupled)**

Power Levels

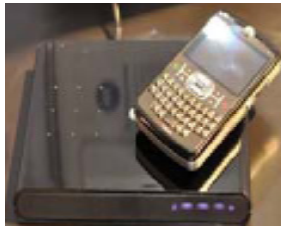

- Low Power : 0 to 5 Watts

- Medium Power : 5 to 125 Watts

- High Power

- Ultra High Power

eCoupled™ History: eSpring™

A Legacy of Success

- **Technology incorporated into Amway's eSpring™ Water Purification Unit for over 7 years**
- **Over 1.5 million units sold**
- **Produced and sold in 36 countries**
- **Meets CISPR 14, 15, and 22**
- **WQA and NSF Certified**
- **Consumers Digest Best Buy**

eSpring

bqTESLA™: Key Features

- Authenticates the receiver each and every time; and delivers the required power only after successful authentication
- Adaptive technology dynamically adjust the operation conditions to the receiver load
- Adaptive technology also corrects for spatial movement, and further extends the power transfer effieiciency
- Built-in protocol enables interoperability between various receivers and transmitters
- Scalable to provide a range of power milliwatts – kilowatts
- Low Harmonics
- Low thermal rise and RFI profile
- Safe – Human exposure and Medical devices
- Low standby power

Safety

SAFE - eCoupled technology has been reviewed and approved by multiple third party certifiers and/or standards bodies.

- No more overloaded power strips
- Meets FCC requirements
- Meets international safety standards
- No stray fields
- No interference with communications, won't harm credit cards, and won't erase data

Wireless Power Consortium (WPC)

- http://www.wirelesspowerconsortium.com
- WPC is working towards a standard for wireless charging stations that will allow interoperability between various and Transmitter and Receiver devices
- TI is a key member of the Consortium – actively involved in the Specification Committee and Promotion Committee
- All compatible devices will be marked with a logo

The sign of Interoperability

Overall System Block Diagram

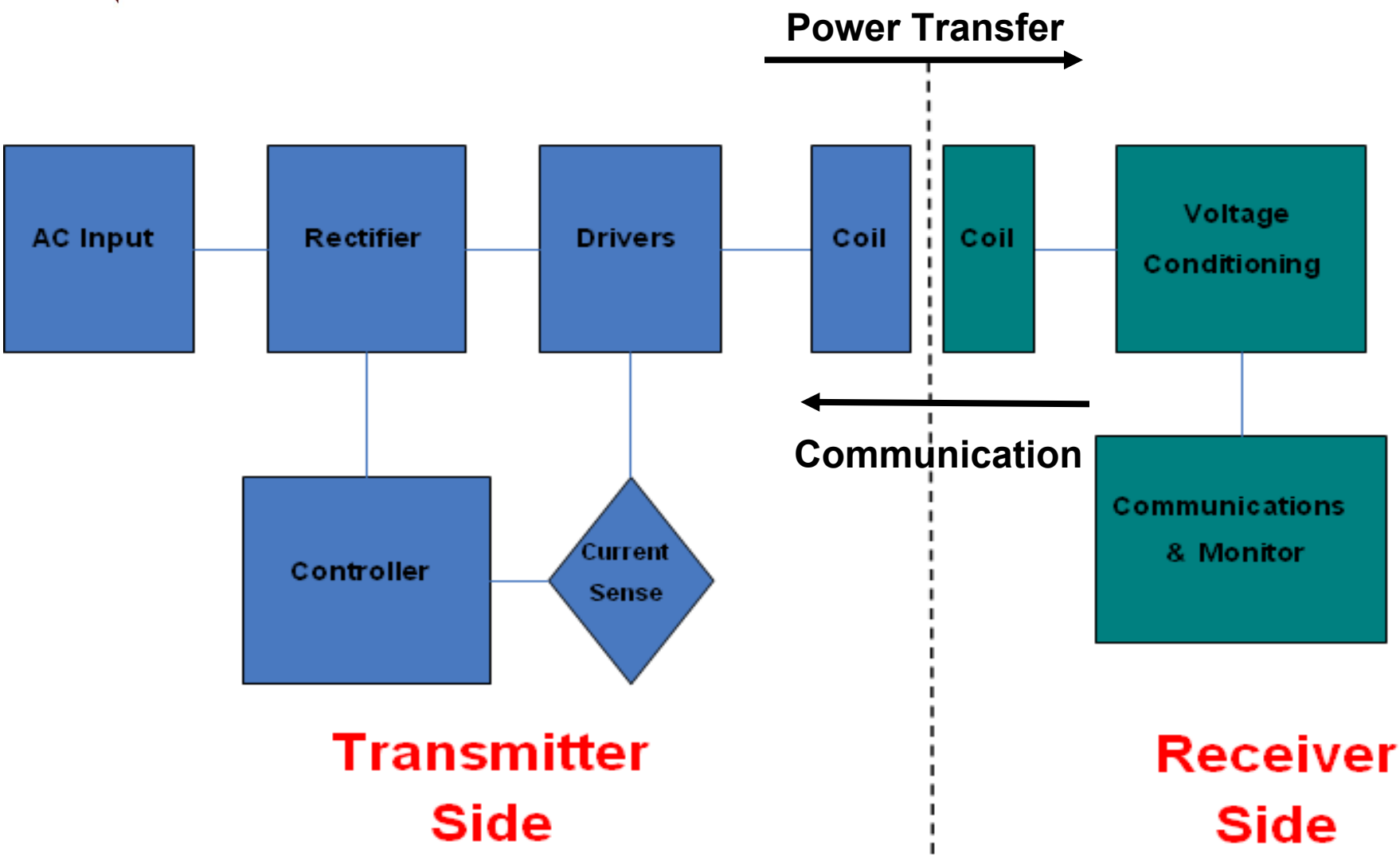

Transmitter (Power Conversion)

- Primary coil (L_p) + serial resonance capacitor (C_p)
- Inverter: e.g. half bridge
- Coil array implementation
- Controlled by e.g. frequency or voltage

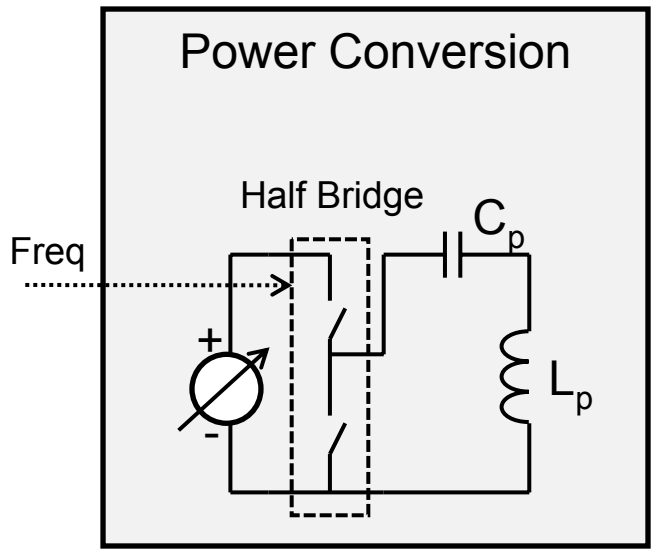

Receiver (Power Pick Up)

- Secondary coil (L_s)
- Serial resonance capacitor (C_s) for efficient power transfer
- Parallel resonance capacitor (C_d) for detection purposes
- Rectifier: full bridge (diode, or switched) + capacitor
- Output switch for (dis-)connecting the load

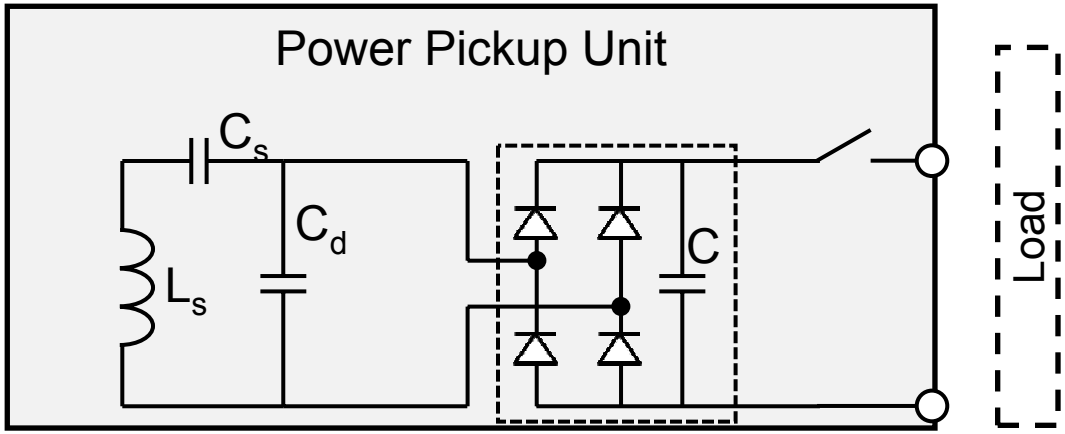

Power Transmission Controlled

- Power transmission is optimized to the needs of the mobile device
- The receiver can detect potential unsafe circumstances and cut off power
- The transmitter can detect potential unsafe circumstances and refuse to deliver power

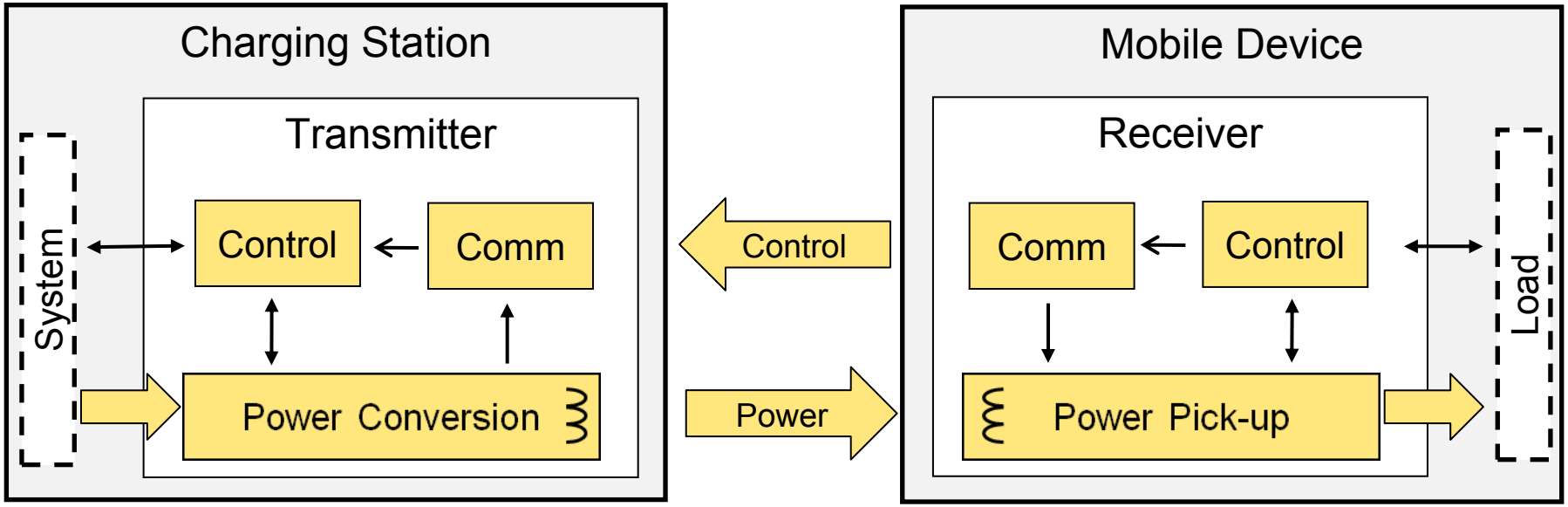

Questions …….

Further technical and product information available under NDA.

Qi: Making Wireless Power Work

Stephen C. Terry, Ph.D.
Texas Instruments, Inc.

Dries van Wageningen
Philips

Overview

- Wireless Charging Technologies
- Basics of Inductive Power Transfer
- Efficiency of Inductive Charging
- What is Qi?
- Overview of Qi technology
- Qi milestones
- Questions

Wireless Charging Technologies

- Currently there are two connector-less charging technologies
  - RF: appropriate for very low power levels (< 1 W)
    - Primary limitation is that only the RF waves that couple to the receiver transfer power, all other power is lost to the atmosphere
  - Inductive: suitable for a wide range of power levels from less than 1W to >1 kW applications
    - Primary limitation is that the receiver and transmitter must be closely coupled

Basics of Inductive Power Transfer

- Inductive power transfer works by coupling a magnetic field from primary to secondary
- Uncoupled field lines rotate around primary coil, don't represent loss as long as the field lines don't couple a parasitic load (eddy current loss)
- Reasonable efficiency can be achieved when the z-gap is less than the coil diameter (70% has been demonstrated)

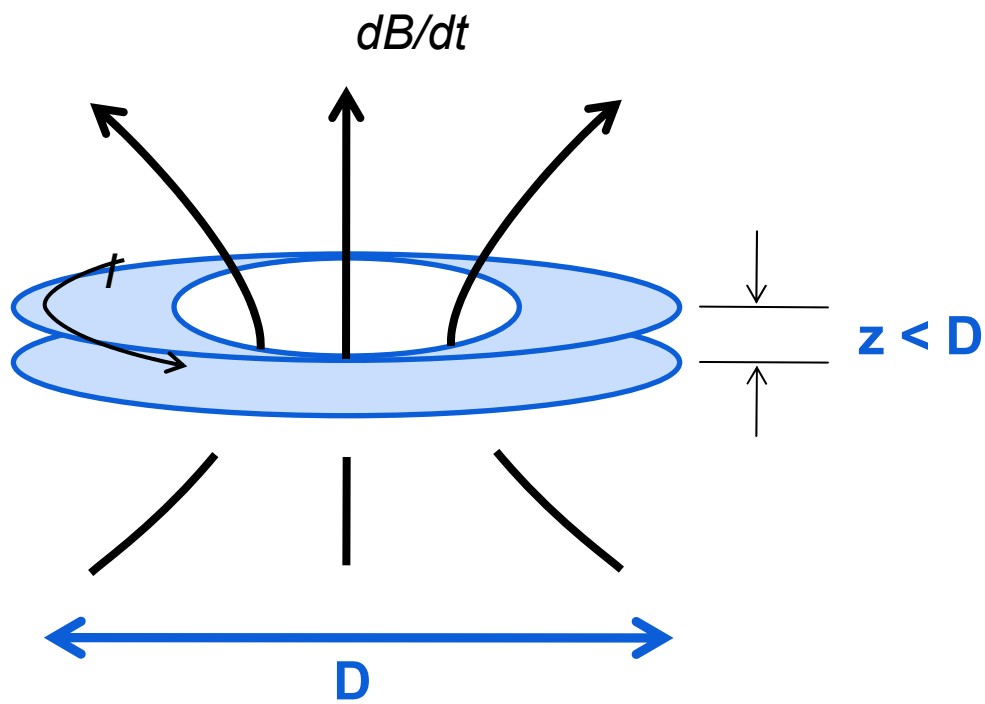

What is Qi?

- Qi – which means “vital energy” – is the name of the wireless battery charging standard developed by the Wireless Power Consortium.
- The Wireless Power Consortium is a group of companies that is developing a world-wide wireless charging stand that will allow interoperability between transmitters and receivers.
- Currently the Qi standard only applies to devices that operate up to 5W.

- Interoperability is the key to making wireless power work!

Who is Qi?

REGULAR MEMBERS

- ConvenientPower — http://www.convenientpower.com
- Fulton Innovation — http://www.fultoninnovation.com
- National Semiconductor — http://www.national.com
- Olympus — http://www.olympus.com
- Nokia — http://www.nokia.com/
- Philips — http://www.philips.com
- Research In Motion — http://www.rim.com/
- Sang Fei — http://www.sangfei.com
- Sanyo — http://www.sanyo.com
- Texas Instruments — http://www.ti.com

ASSOCIATE MEMBERS

- case-mate — http://www.case-mate.com/
- Continental Automotive — http://www.continental-corporation.com/
- Duracell — http://www.duracell.com
- E & E Magnetic Products Limited — http://www.eleceltek.com/
- Energizer — http://www.energizer.com/
- Hanrim Postech — http://www.hanrim.com
- Hi-P — http://www.hi-p.com/
- Hosiden — http://www.hosiden.co.jp/web/english
- iGo — http://www.igo.com/
- Leggett & Platt — http://www.leggett.com
- Logah Technology, a subsidiary of the Lite-On Group — http://www.logah.com/
- Powerkiss — http://www.powerkiss.com/
- Primax — http://www.primax.com.tw/
- Rohm — http://www.rohm.com/
- Samsung Electronics — http://www.samsung.com
- ST-Ericsson — http://www.stericsson.com
- Toko, Inc. — http://www.toko.co.jp/

System Overview (Top View)

- **Base Station**
  - **Contains one, or more transmitters**
  - **Transmitter provides power to receiver**
- **Mobile Device**
  - **Contains a receiver that provides power to a load (e.g. a battery)**
  - **Receiver provides control information to transmitter**

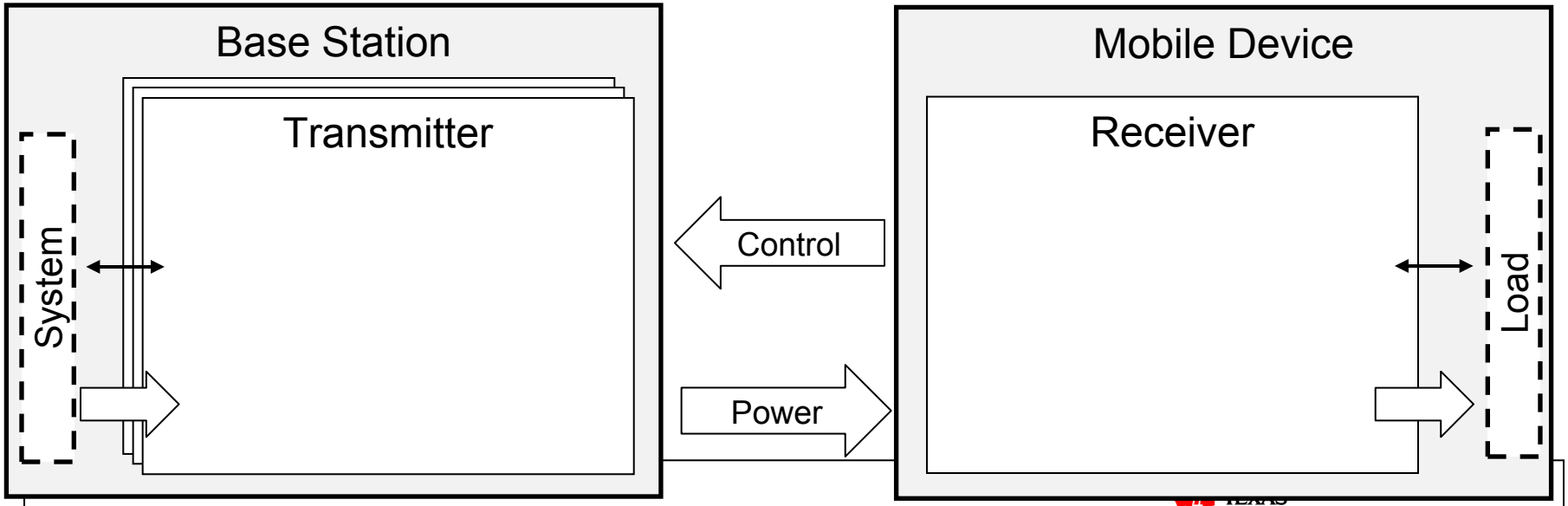

System Overview (Power Conversion)

- **Power Conversion Unit converts electrical power to wireless power signal**
- **Power Pickup Unit converts wireless power signal to electrical power**

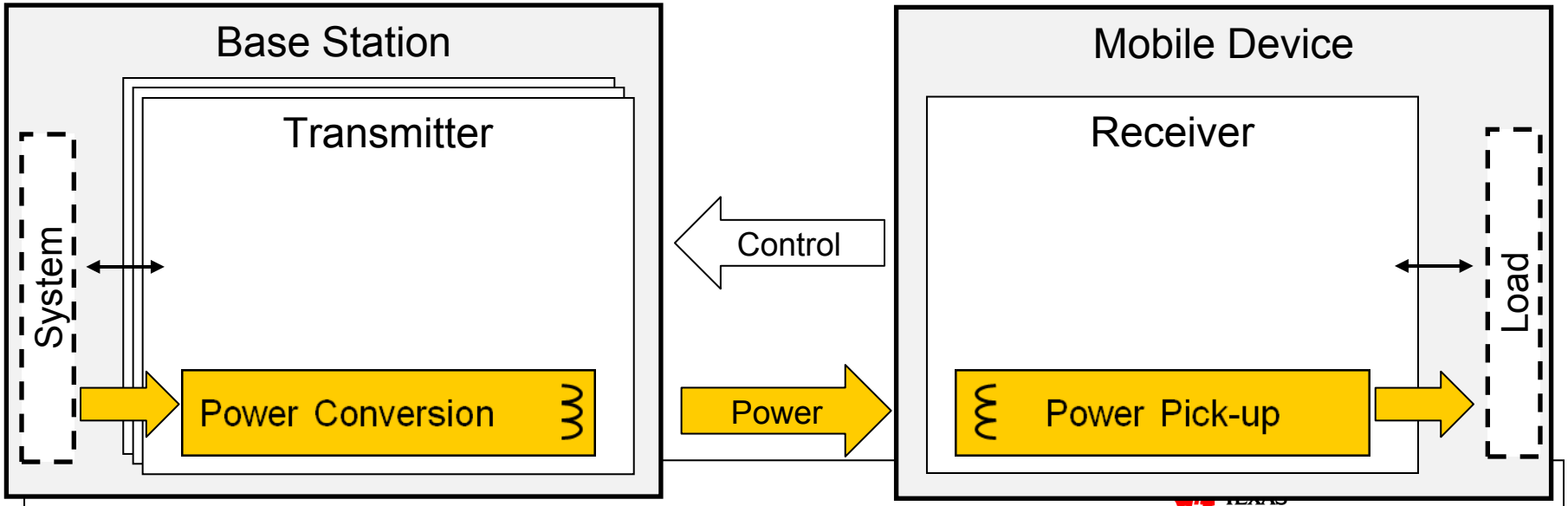

System Overview (Control)

- **Receiver controls the power to the output load**
  - **To the need of the mobile device (required power)**
  - **To the desired operation point (e.g. output current, voltage)**
- **Transmitter adapts power transfer**
  - **To the need of the receiver (required power)**
  - **To the desired operation point (e.g. primary coil current)**

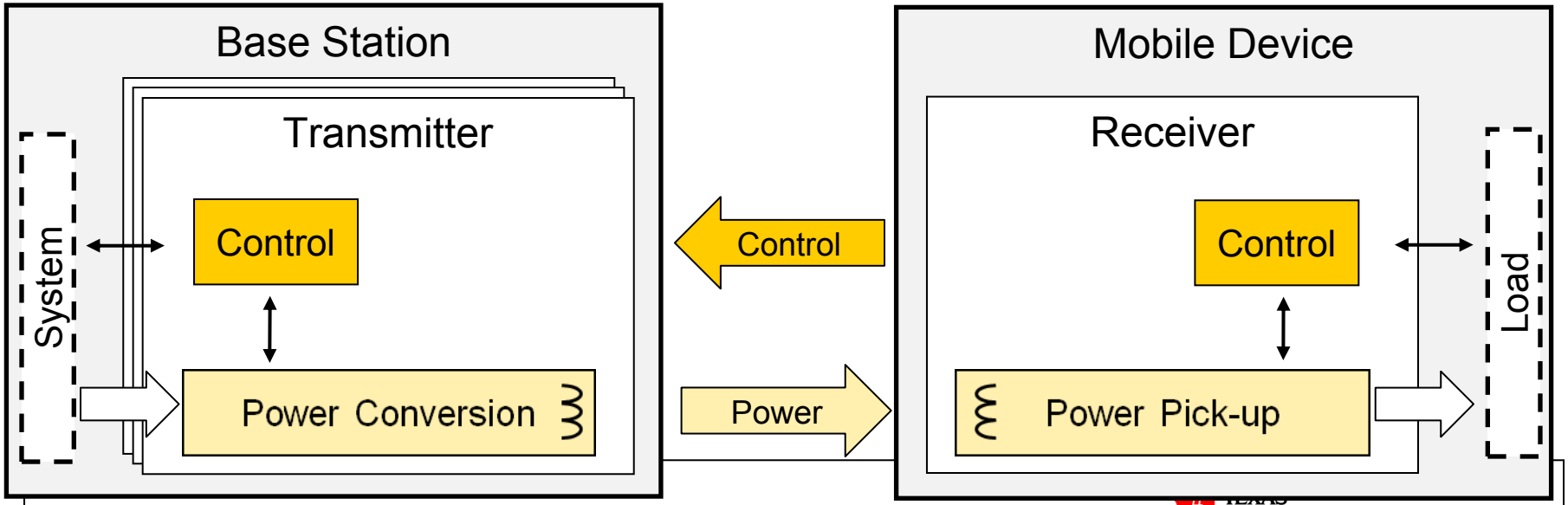

System Overview (Communication)

- **Receiver sends messages**
  - **To provide control information to the transmitter**
  - **By load modulation on the power signal**
- **Transmitter receives messages**
  - **To receive control information from the receiver**
  - **By de-modulation of the reflected load**

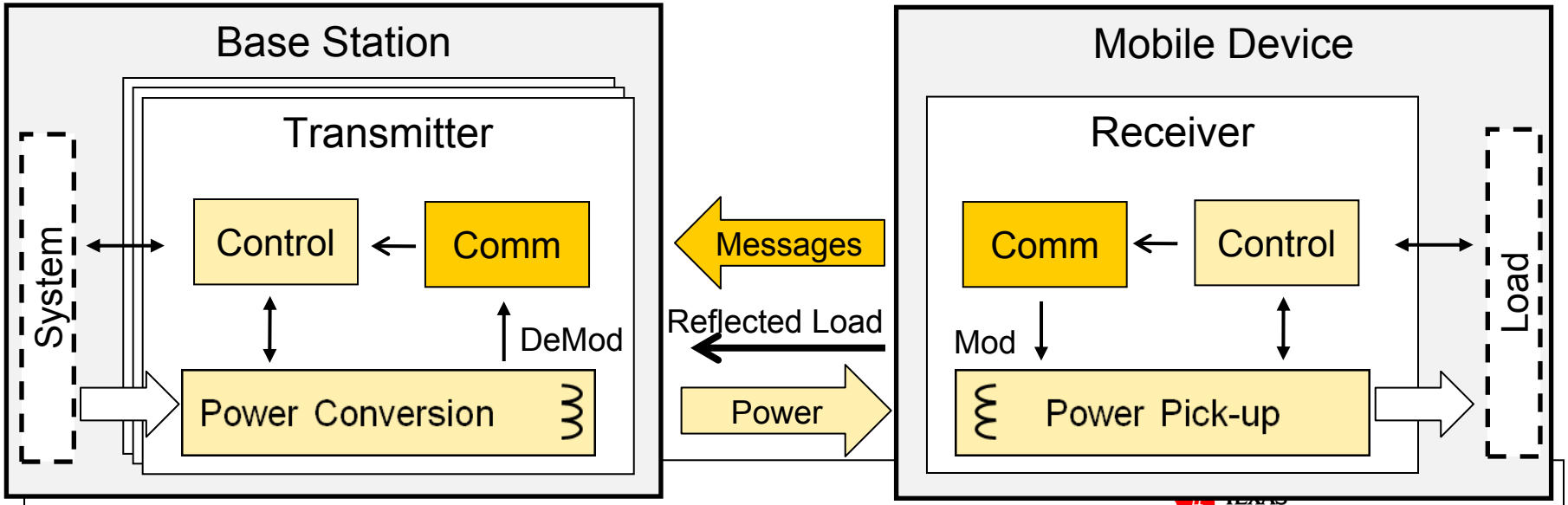

Power Conversion (Transmitter)

- **Primary coil (L_p) + serial resonance capacitor (C_p)**
- **Inverter: e.g. half bridge**
- **Coil array implementation**
- **Controlled by e.g. frequency or voltage**

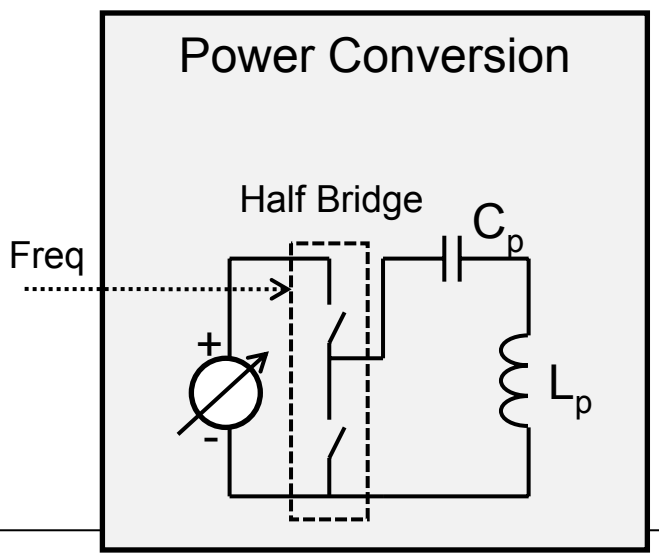

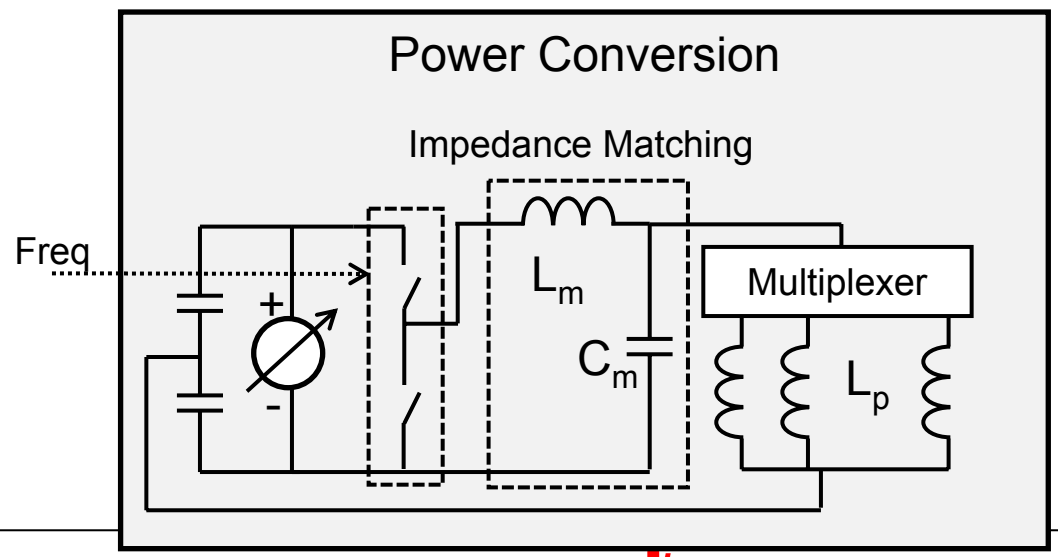

Power Pick Up (Receiver)

- Secondary coil (L_s)
- Serial resonance capacitor (C_s) for efficient power transfer
- Parallel resonance capacitor (C_d) for detection purposes
- Rectifier: full bridge (diode, or switched) + capacitor
- Output switch for (dis-)connecting the load

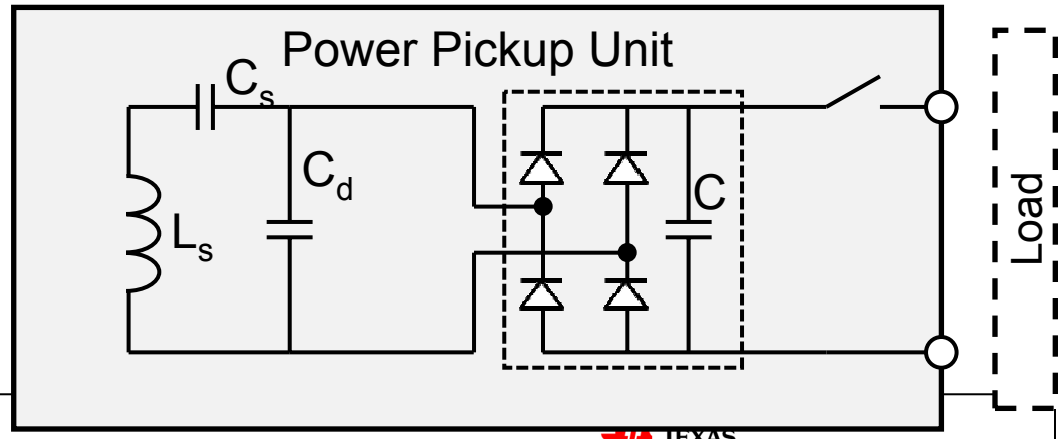

Communication (Modulation)

- **Receiver modulates load by**
  - **Switching modulation resistor (R_m), or**
  - **Switching modulation capacitor (C_m)**
- **Transmitter de-modulates reflected load by**
  - **Sensing primary coil current (I_p) and/or**
  - **Sensing primary coil voltage (V_p)**

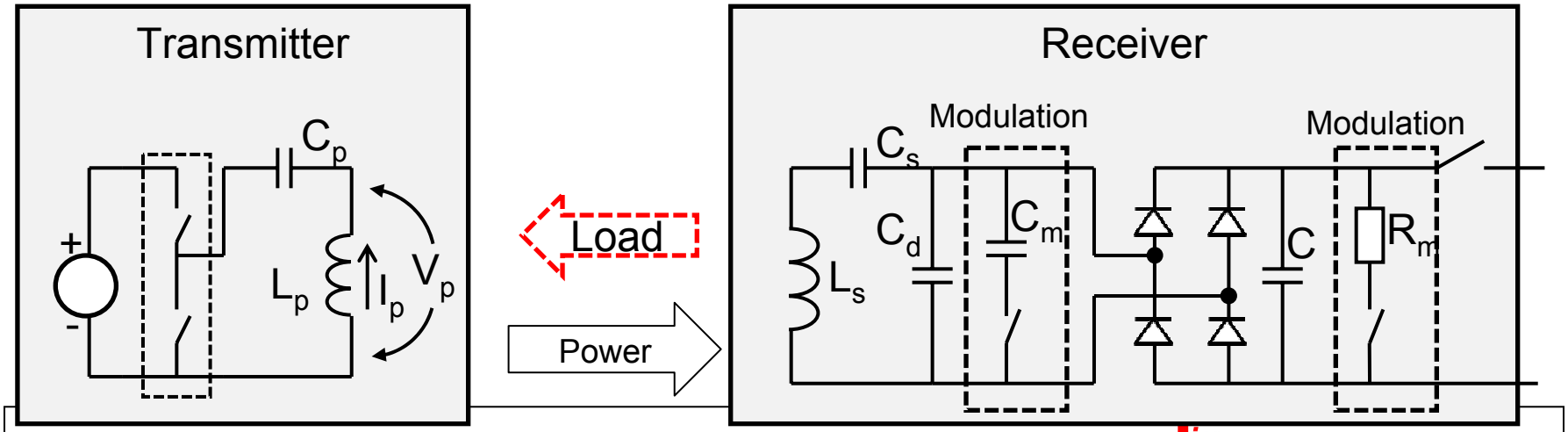

Power Transfer Control

Transmitter

- Interpret desired control point from
  - Control error message
  - Actual control point
- Adapt power towards zero difference between
  - Desired control point
  - Actual control point

Receiver

- Calculate control error
  = difference between
  - Desired control point
  - Actual control point
- Communicate control error message

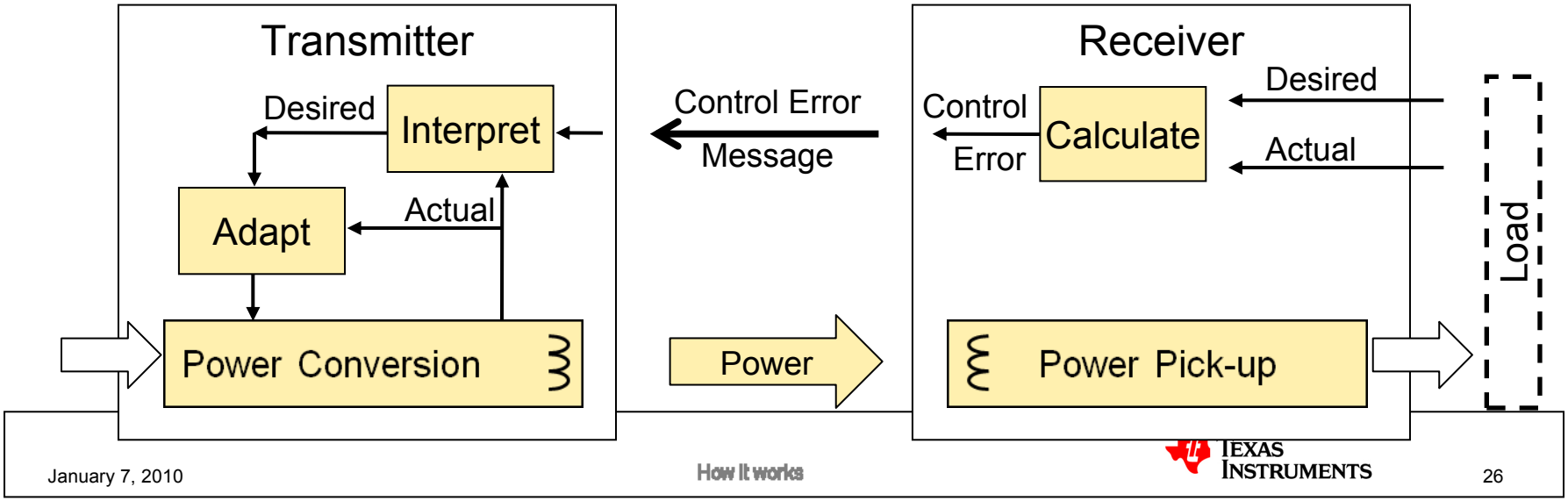

Coil Alignment (Design Freedom)

- Guided positioning with tactile feedback
- Free positioning with moving coil
- Free positioning with selective activation of coils in coil array

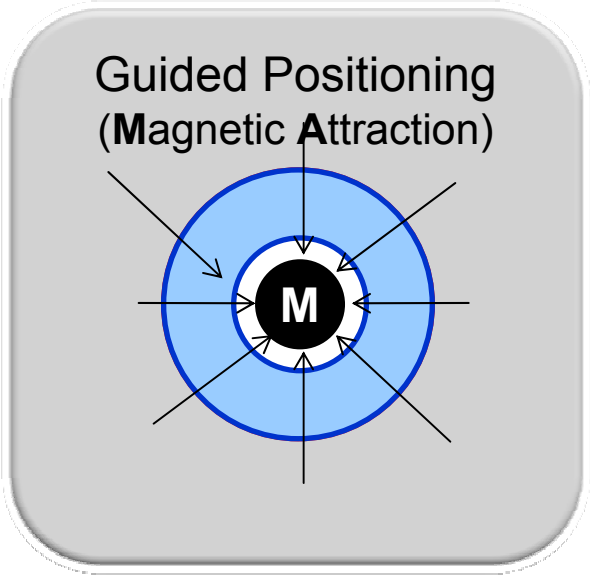

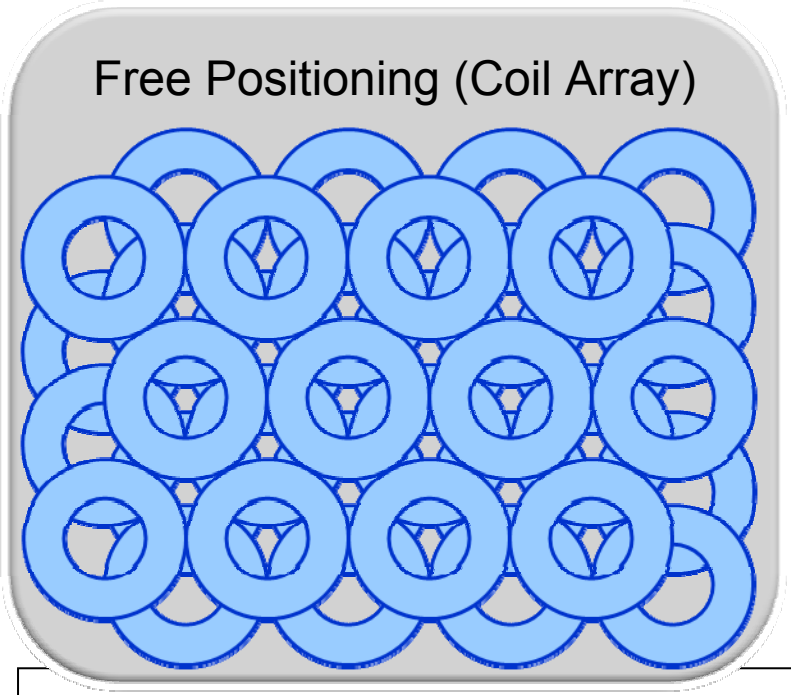

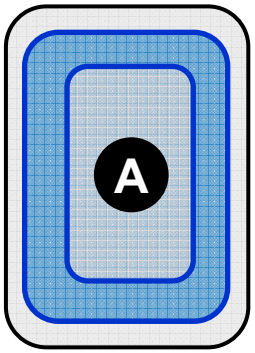

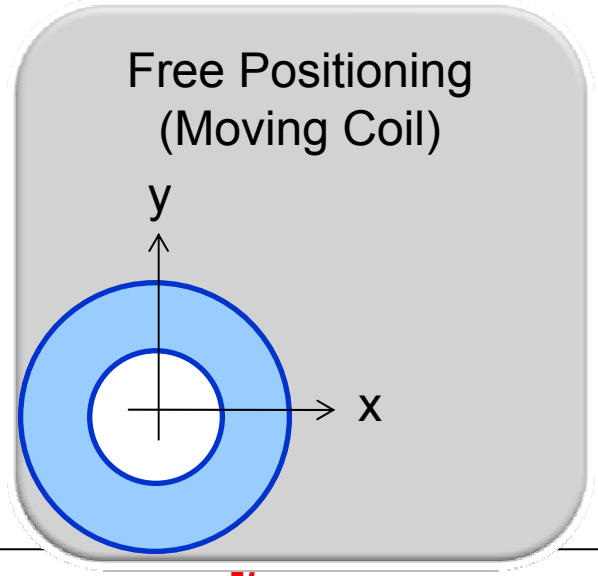

Standby Power

- **Transmitter can enter standby power mode when**
  - **No device is present, or**
  - **present devices need no power (battery charged)**
- **Transmitter can apply various methods to react on a receiver**
  - **Capacitance change**
    - **To detect the placement of a potential receiver**
    - **E.g. 0.1 mW**
  - **Resonance detection , or**
  - **Resonance change**
    - **To detect the presence and location of a potential receiver**
    - **E.g. 5 mW per primary coil when applied every 0.5s**
  - **Digital ping**
    - **To detect the presence and location of a receiver**
    - **To check for power need of a receiver**

Example
Standby Behavior

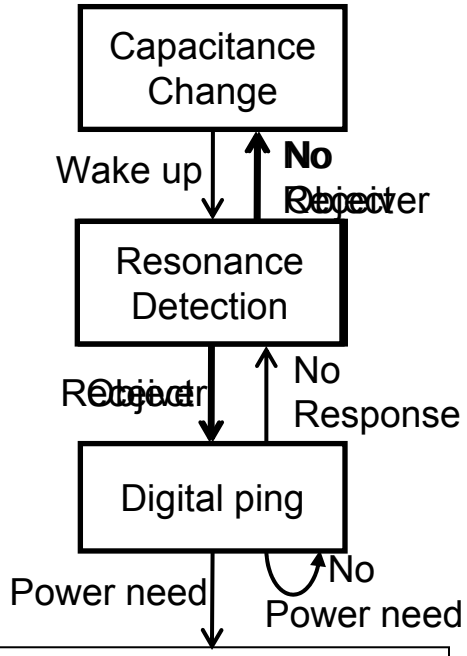

Qi Milestones

- August 2009 – v0.95 of the Qi standard released

- v1.0 of the Qi standard coming soon!

Questions?

- **More information can be found at:**
  - www.wirelesspowerconsortium.com