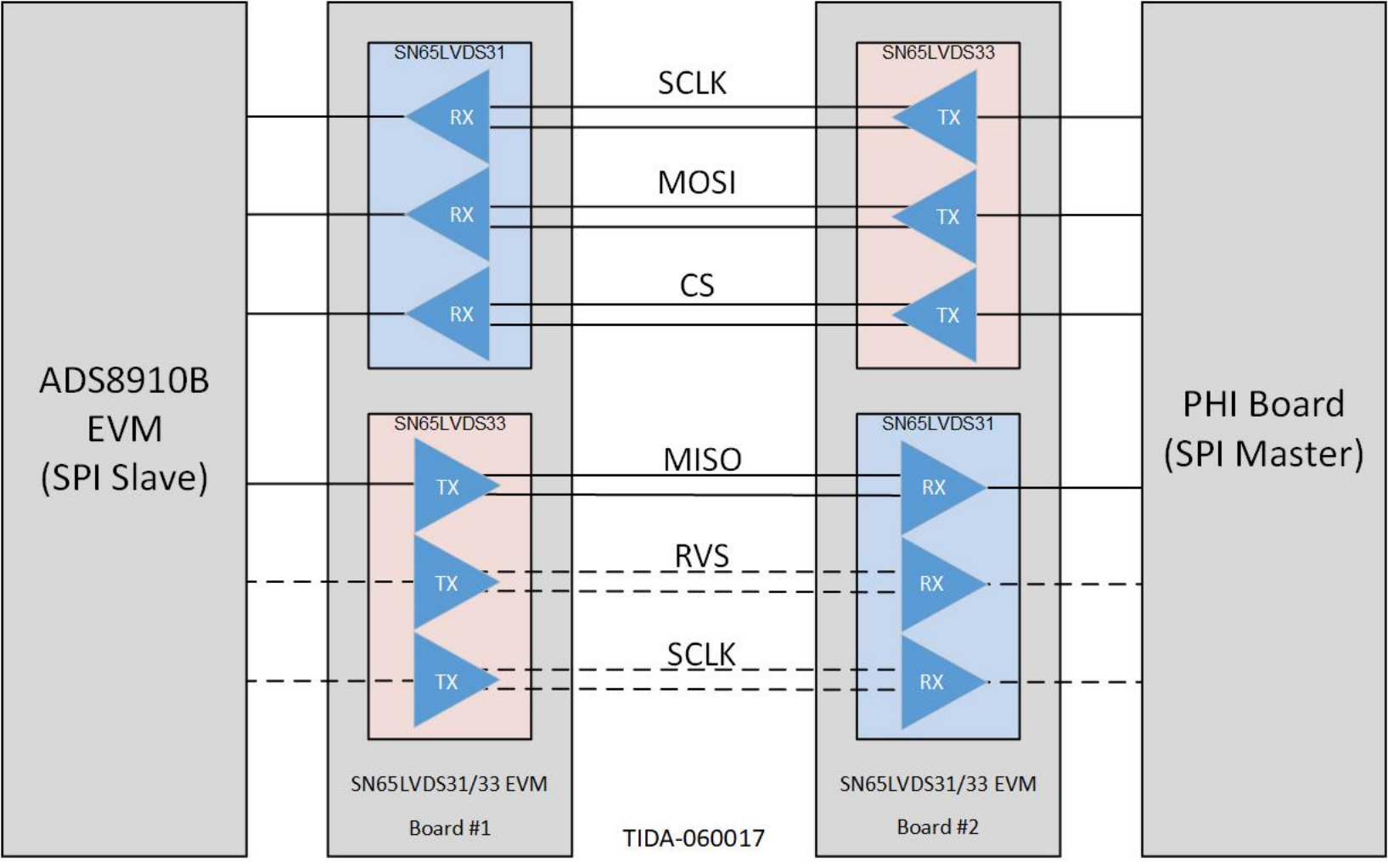
ADS8910B
EVM
(SPI Slave)
SN65LVDS31
RX
RX
RX
SN65LVDS33
TX
TX
TX
SN65LVDS33
TX
TX
TX
SN65LVDS31
RX
RX
RX
SCLK
MOSI
CS
MISO
RVS
SCLK
SN65LVDS31/33 EVM
Board #1
SN65LVDS31/33 EVM
Board #2
PHI Board
(SPI Master)
TIDA-060017