TAPE AND REEL INFORMATION

REEL DIMENSIONS

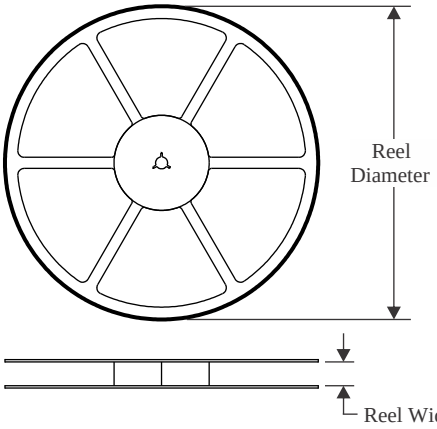

TAPE DIMENSIONS

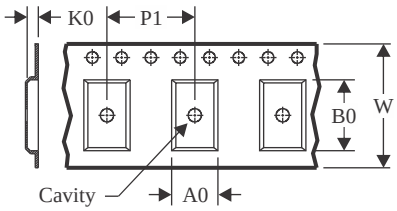

A0	Dimension designed to accommodate the component width
B0	Dimension designed to accommodate the component length
K0	Dimension designed to accommodate the component thickness
W	Overall width of the carrier tape
P1	Pitch between successive cavity centers

QUADRANT ASSIGNMENTS FOR PIN 1 ORIENTATION IN TAPE

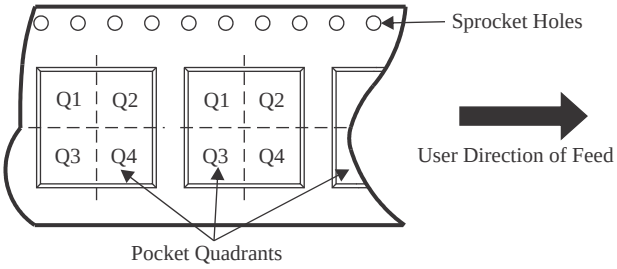

*All dimensions are nominal

Device	Package Type	Package Drawing	Pins	SPQ	Reel Diameter (mm)	Reel Width W1 (mm)	A0 (mm)	B0 (mm)	K0 (mm)	P1 (mm)	W (mm)	Pin1 Quadrant
AM26LS32ACDR	SOIC	D	16	2500	330.0	16.4	6.5	10.3	2.1	8.0	16.0	Q1
AM26LS32ACDR	SOIC	D	16	2500	330.0	16.4	6.5	10.3	2.1	8.0	16.0	Q1
AM26LS32ACDR	SOIC	D	16	2500	330.0	16.4	6.5	10.3	2.1	8.0	16.0	Q1
AM26LS32ACNSR	SO	NS	16	2000	330.0	16.4	8.2	10.5	2.5	12.0	16.0	Q1
AM26LS32ACNSR	SO	NS	16	2000	330.0	16.4	8.2	10.5	2.5	12.0	16.0	Q1
AM26LS32ACPWR	TSSOP	PW	16	2000	330.0	12.4	6.9	5.6	1.6	8.0	12.0	Q1
AM26LS32ACPWR	TSSOP	PW	16	2000	330.0	12.4	6.9	5.6	1.6	8.0	12.0	Q1
AM26LS32AIDR	SOIC	D	16	2500	330.0	16.4	6.5	10.3	2.1	8.0	16.0	Q1
AM26LS33ACDR	SOIC	D	16	2500	330.0	16.4	6.5	10.3	2.1	8.0	16.0	Q1

TAPE AND REEL BOX DIMENSIONS

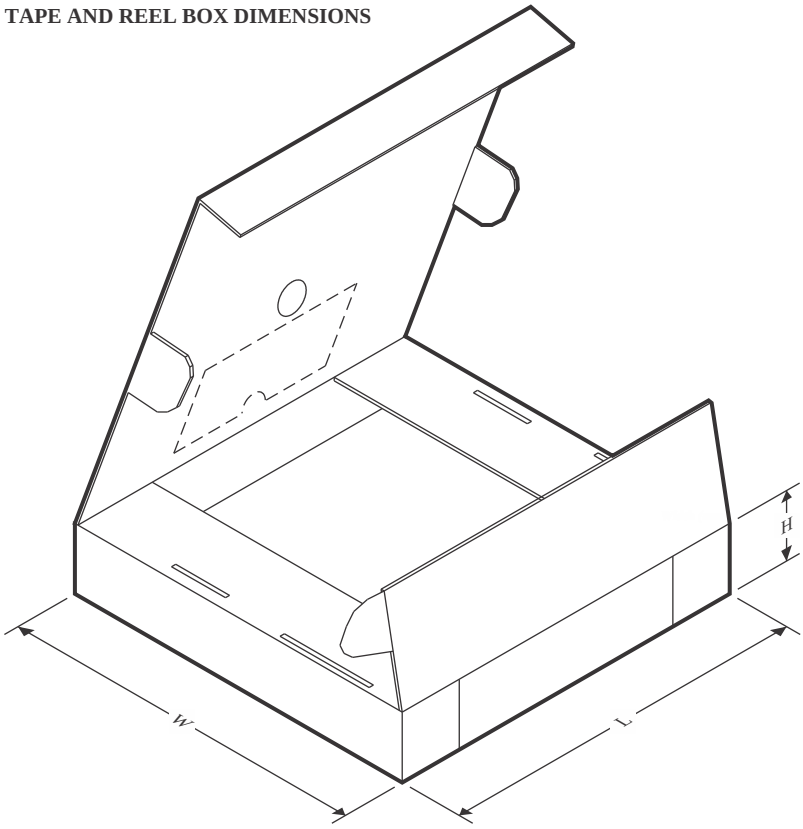

*All dimensions are nominal

Device	Package Type	Package Drawing	Pins	SPQ	Length (mm)	Width (mm)	Height (mm)
AM26LS32ACDR	SOIC	D	16	2500	353.0	353.0	32.0
AM26LS32ACDR	SOIC	D	16	2500	353.0	353.0	32.0
AM26LS32ACDR	SOIC	D	16	2500	356.0	356.0	35.0
AM26LS32ACNSR	SO	NS	16	2000	367.0	367.0	38.0
AM26LS32ACNSR	SO	NS	16	2000	353.0	353.0	32.0
AM26LS32ACPWR	TSSOP	PW	16	2000	367.0	367.0	35.0
AM26LS32ACPWR	TSSOP	PW	16	2000	353.0	353.0	32.0
AM26LS32AIDR	SOIC	D	16	2500	353.0	353.0	32.0
AM26LS33ACDR	SOIC	D	16	2500	353.0	353.0	32.0

TUBE

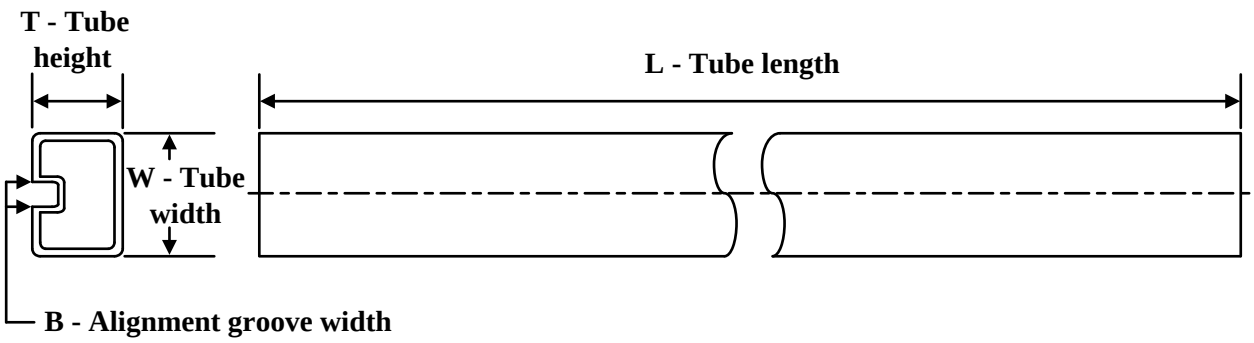

*All dimensions are nominal

Device	Package Name	Package Type	Pins	SPQ	L (mm)	W (mm)	T (µm)	B (mm)
5962-7802003M2A	FK	LCCC	20	55	506.98	12.06	2030	NA
5962-7802003MFA	W	CFP	16	25	506.98	26.16	6220	NA
5962-7802004M2A	FK	LCCC	20	55	506.98	12.06	2030	NA
5962-7802004MFA	W	CFP	16	25	506.98	26.16	6220	NA
AM26LS32ACN	N	PDIP	16	25	506	13.97	11230	4.32
AM26LS32AIN	N	PDIP	16	25	506	13.97	11230	4.32
AM26LS32AMFKB	FK	LCCC	20	55	506.98	12.06	2030	NA
AM26LS32AMWB	W	CFP	16	25	506.98	26.16	6220	NA
AM26LS33ACN	N	PDIP	16	25	506	13.97	11230	4.32
AM26LS33AMFKB	FK	LCCC	20	55	506.98	12.06	2030	NA
AM26LS33AMWB	W	CFP	16	25	506.98	26.16	6220	NA