TAPE AND REEL INFORMATION

REEL DIMENSIONS

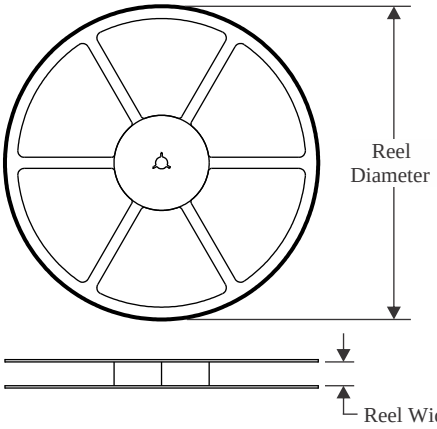

TAPE DIMENSIONS

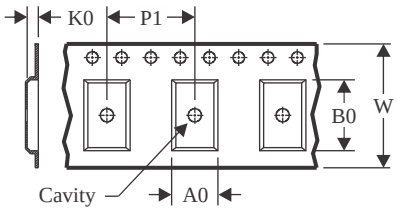

A0	Dimension designed to accommodate the component width
B0	Dimension designed to accommodate the component length
K0	Dimension designed to accommodate the component thickness
W	Overall width of the carrier tape
P1	Pitch between successive cavity centers

QUADRANT ASSIGNMENTS FOR PIN 1 ORIENTATION IN TAPE

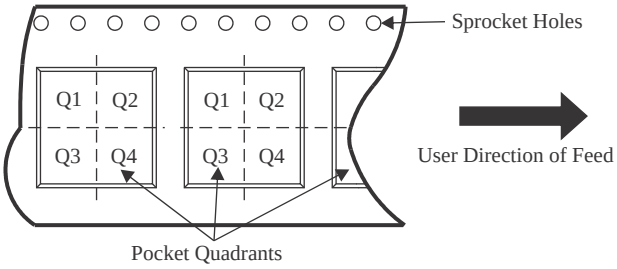

*All dimensions are nominal

Device	Package Type	Package Drawing	Pins	SPQ	Reel Diameter (mm)	Reel Width W1 (mm)	A0 (mm)	B0 (mm)	K0 (mm)	P1 (mm)	W (mm)	Pin1 Quadrant
SN74AHC595BQBR	WQFN	BQB	16	3000	180.0	12.4	2.8	3.8	1.2	4.0	12.0	Q1
SN74AHC595DBR	SSOP	DB	16	2000	330.0	16.4	8.35	6.6	2.4	12.0	16.0	Q1
SN74AHC595DR	SOIC	D	16	2500	330.0	16.4	6.5	10.3	2.1	8.0	16.0	Q1
SN74AHC595DR	SOIC	D	16	2500	330.0	12.4	3.75	3.75	1.15	8.0	12.0	Q1
SN74AHC595PWR	TSSOP	PW	16	2000	330.0	12.4	6.9	5.6	1.6	8.0	12.0	Q1
SN74AHC595PWR	TSSOP	PW	16	2000	330.0	12.4	6.9	5.6	1.6	8.0	12.0	Q1
SN74AHC595PWRG4	TSSOP	PW	16	2000	330.0	12.4	6.9	5.6	1.6	8.0	12.0	Q1
SN74AHC595PWRG4	TSSOP	PW	16	2000	330.0	12.4	6.9	5.6	1.6	8.0	12.0	Q1

TAPE AND REEL BOX DIMENSIONS

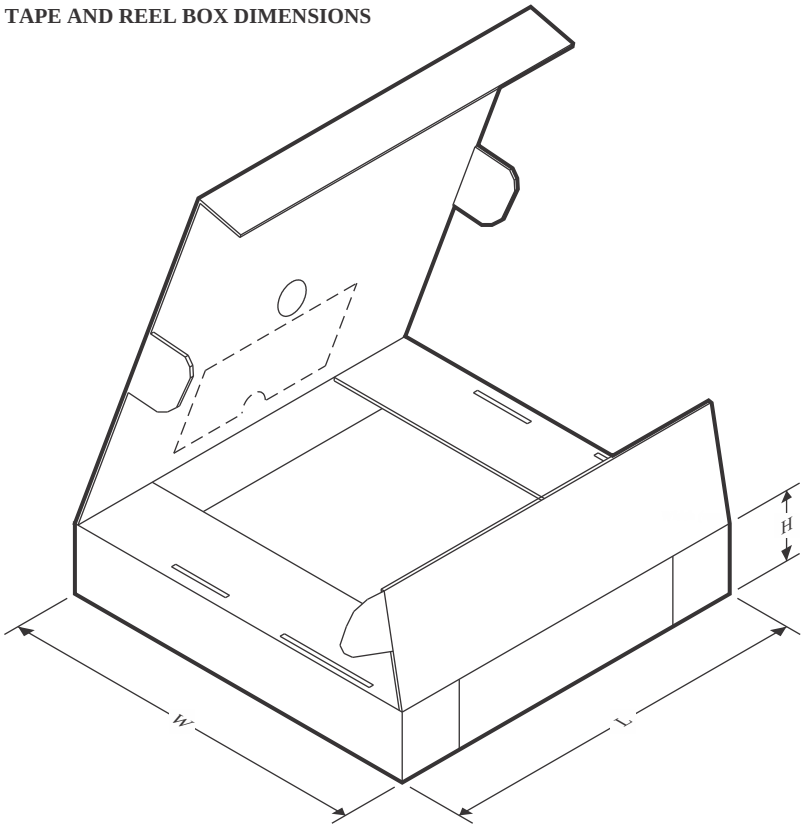

*All dimensions are nominal

Device	Package Type	Package Drawing	Pins	SPQ	Length (mm)	Width (mm)	Height (mm)
SN74AHC595BQBR	WQFN	BQB	16	3000	210.0	185.0	35.0
SN74AHC595DBR	SSOP	DB	16	2000	356.0	356.0	35.0
SN74AHC595DR	SOIC	D	16	2500	353.0	353.0	32.0
SN74AHC595DR	SOIC	D	16	2500	340.5	336.1	32.0
SN74AHC595PWR	TSSOP	PW	16	2000	356.0	356.0	35.0
SN74AHC595PWR	TSSOP	PW	16	2000	353.0	353.0	32.0
SN74AHC595PWRG4	TSSOP	PW	16	2000	353.0	353.0	32.0
SN74AHC595PWRG4	TSSOP	PW	16	2000	367.0	367.0	35.0

TUBE

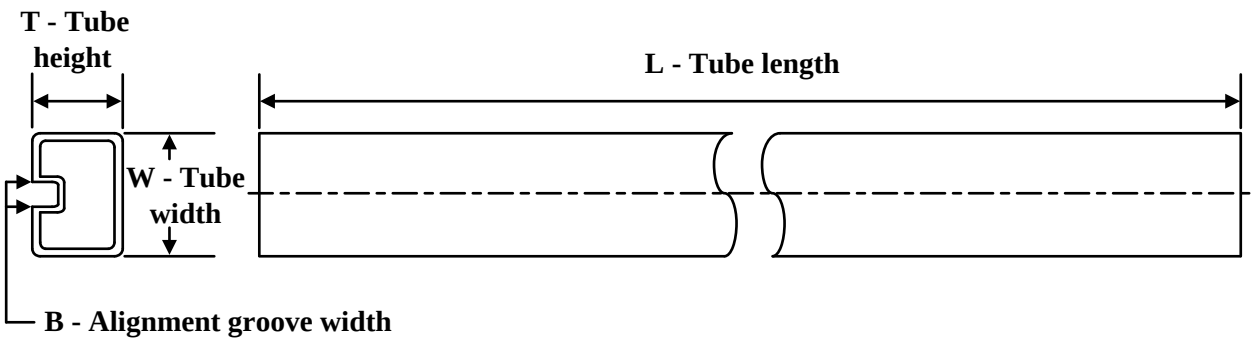

*All dimensions are nominal

Device	Package Name	Package Type	Pins	SPQ	L (mm)	W (mm)	T (µm)	B (mm)
SN74AHC595N	N	PDIP	16	25	506	13.97	11230	4.32
SN74AHC595N	N	PDIP	16	25	506	13.97	11230	4.32