TAPE AND REEL INFORMATION

REEL DIMENSIONS

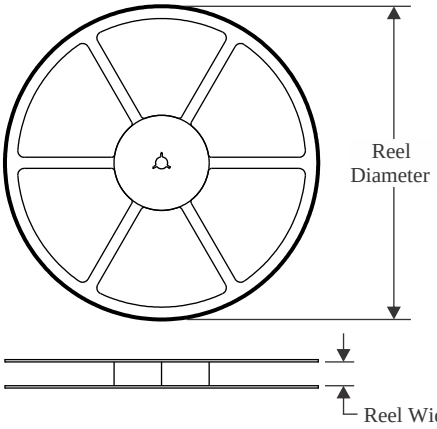

TAPE DIMENSIONS

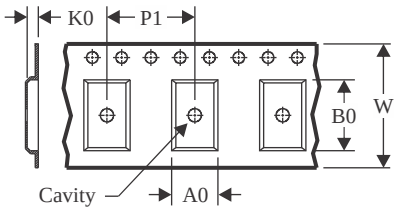

A0	Dimension designed to accommodate the component width
B0	Dimension designed to accommodate the component length
K0	Dimension designed to accommodate the component thickness
W	Overall width of the carrier tape
P1	Pitch between successive cavity centers

QUADRANT ASSIGNMENTS FOR PIN 1 ORIENTATION IN TAPE

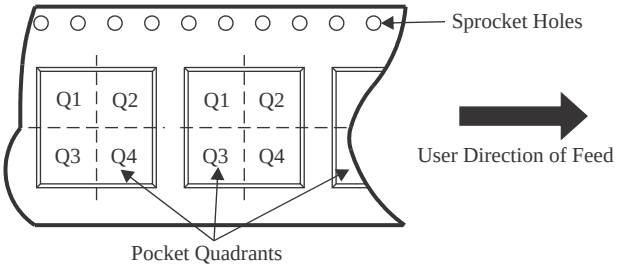

*All dimensions are nominal

Device	Package Type	Package Drawing	Pins	SPQ	Reel Diameter (mm)	Reel Width W1 (mm)	A0 (mm)	B0 (mm)	K0 (mm)	P1 (mm)	W (mm)	Pin1 Quadrant
TL071ACDR	SOIC	D	8	2500	330.0	12.4	6.4	5.2	2.1	8.0	12.0	Q1
TL071ACDR	SOIC	D	8	2500	330.0	12.4	6.4	5.2	2.1	8.0	12.0	Q1
TL071BCDR	SOIC	D	8	2500	330.0	12.4	6.4	5.2	2.1	8.0	12.0	Q1
TL071BCDR	SOIC	D	8	2500	330.0	12.4	6.4	5.2	2.1	8.0	12.0	Q1
TL071CDR	SOIC	D	8	2500	330.0	12.4	6.4	5.2	2.1	8.0	12.0	Q1
TL071CPSR	SO	PS	8	2000	330.0	16.4	8.35	6.6	2.4	12.0	16.0	Q1
TL071HIDBVR	SOT-23	DBV	5	3000	180.0	8.4	3.2	3.2	1.4	4.0	8.0	Q3
TL071HIDCKR	SC70	DCK	5	3000	178.0	9.0	2.4	2.5	1.2	4.0	8.0	Q3
TL071HIDR	SOIC	D	8	3000	330.0	12.4	6.4	5.2	2.1	8.0	12.0	Q1
TL071IDR	SOIC	D	8	2500	330.0	12.4	6.4	5.2	2.1	8.0	12.0	Q1
TL072ACDR	SOIC	D	8	2500	330.0	12.4	6.4	5.2	2.1	8.0	12.0	Q1
TL072BCDR	SOIC	D	8	2500	330.0	12.4	6.4	5.2	2.1	8.0	12.0	Q1
TL072BCDR	SOIC	D	8	2500	330.0	12.4	6.4	5.2	2.1	8.0	12.0	Q1
TL072CDR	SOIC	D	8	2500	330.0	12.4	6.4	5.2	2.1	8.0	12.0	Q1
TL072CDR	SOIC	D	8	2500	330.0	12.4	6.4	5.2	2.1	8.0	12.0	Q1
TL072CPSR	SO	PS	8	2000	330.0	16.4	8.35	6.6	2.4	12.0	16.0	Q1

Device	Package Type	Package Drawing	Pins	SPQ	Reel Diameter (mm)	Reel Width W1 (mm)	A0 (mm)	B0 (mm)	K0 (mm)	P1 (mm)	W (mm)	Pin1 Quadrant
TL072CPWR	TSSOP	PW	8	2000	330.0	12.4	7.0	3.6	1.6	8.0	12.0	Q1
TL072CPWR	TSSOP	PW	8	2000	330.0	12.4	7.0	3.6	1.6	8.0	12.0	Q1
TL072HIDDFR	SOT-23-THIN	DDF	8	3000	180.0	8.4	3.2	3.2	1.4	4.0	8.0	Q3
TL072HIDR	SOIC	D	8	3000	330.0	12.4	6.4	5.2	2.1	8.0	12.0	Q1
TL072HIPWR	TSSOP	PW	8	3000	330.0	12.4	7.0	3.6	1.6	8.0	12.0	Q1
TL072IDR	SOIC	D	8	2500	330.0	12.4	6.4	5.2	2.1	8.0	12.0	Q1
TL072IDR	SOIC	D	8	2500	330.0	12.4	6.4	5.2	2.1	8.0	12.0	Q1
TL072IDR	SOIC	D	8	2500	330.0	12.4	6.4	5.2	2.1	8.0	12.0	Q1
TL074ACDR	SOIC	D	14	2500	330.0	16.4	6.5	9.0	2.1	8.0	16.0	Q1
TL074ACDR	SOIC	D	14	2500	330.0	16.4	6.5	9.0	2.1	8.0	16.0	Q1
TL074ACNSR	SO	NS	14	2000	330.0	16.4	8.2	10.5	2.5	12.0	16.0	Q1
TL074BCDR	SOIC	D	14	2500	330.0	16.4	6.5	9.0	2.1	8.0	16.0	Q1
TL074BCDR	SOIC	D	14	2500	330.0	16.4	6.5	9.0	2.1	8.0	16.0	Q1
TL074CDBR	SSOP	DB	14	2000	330.0	16.4	8.35	6.6	2.4	12.0	16.0	Q1
TL074CDR	SOIC	D	14	2500	330.0	16.4	6.5	9.0	2.1	8.0	16.0	Q1
TL074CDR	SOIC	D	14	2500	330.0	16.4	6.5	9.0	2.1	8.0	16.0	Q1
TL074CDRG4	SOIC	D	14	2500	330.0	16.4	6.5	9.0	2.1	8.0	16.0	Q1
TL074CNSR	SO	NS	14	2000	330.0	16.4	8.2	10.5	2.5	12.0	16.0	Q1
TL074CPWR	TSSOP	PW	14	2000	330.0	12.4	6.9	5.6	1.6	8.0	12.0	Q1
TL074CPWR	TSSOP	PW	14	2000	330.0	12.4	6.9	5.6	1.6	8.0	12.0	Q1
TL074HIDR	SOIC	D	14	2500	330.0	16.4	6.5	9.0	2.1	8.0	16.0	Q1
TL074HIDYYR	SOT-23-THIN	DYY	14	3000	330.0	12.4	4.8	3.6	1.6	8.0	12.0	Q3
TL074HIPWR	TSSOP	PW	14	2000	330.0	12.4	6.9	5.6	1.6	8.0	12.0	Q1
TL074IDR	SOIC	D	14	2500	330.0	16.4	6.5	9.0	2.1	8.0	16.0	Q1

TAPE AND REEL BOX DIMENSIONS

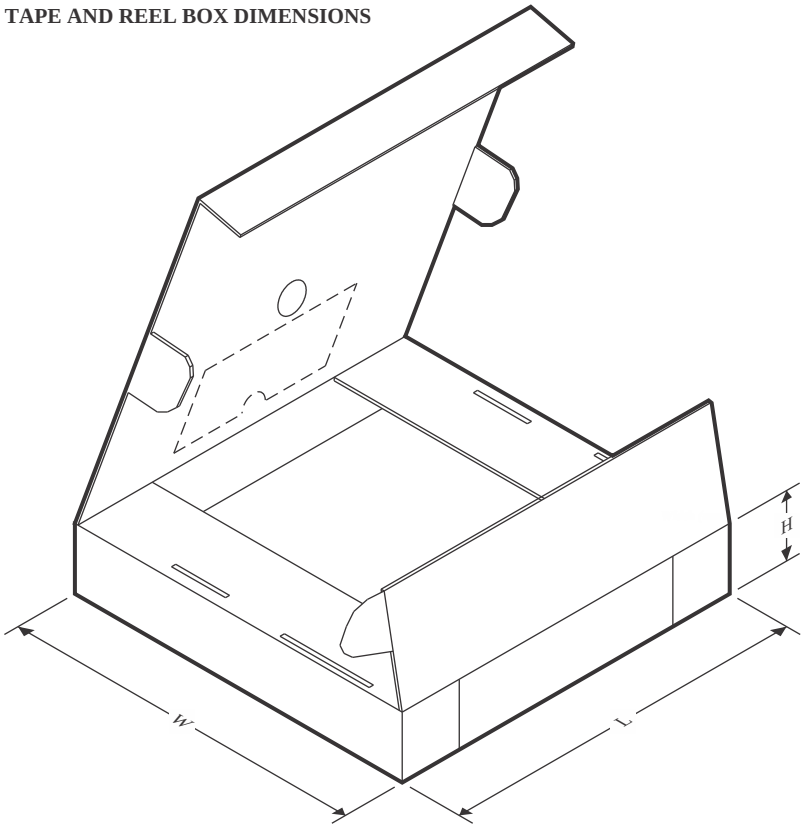

*All dimensions are nominal

Device	Package Type	Package Drawing	Pins	SPQ	Length (mm)	Width (mm)	Height (mm)
TL071ACDR	SOIC	D	8	2500	356.0	356.0	35.0
TL071ACDR	SOIC	D	8	2500	340.5	338.1	20.6
TL071BCDR	SOIC	D	8	2500	340.5	338.1	20.6
TL071BCDR	SOIC	D	8	2500	356.0	356.0	35.0
TL071CDR	SOIC	D	8	2500	356.0	356.0	35.0
TL071CPSR	SO	PS	8	2000	356.0	356.0	35.0
TL071HIDBVR	SOT-23	DBV	5	3000	210.0	185.0	35.0
TL071HIDCKR	SC70	DCK	5	3000	190.0	190.0	30.0
TL071HIDR	SOIC	D	8	3000	356.0	356.0	35.0
TL071IDR	SOIC	D	8	2500	353.0	353.0	32.0
TL072ACDR	SOIC	D	8	2500	356.0	356.0	35.0
TL072BCDR	SOIC	D	8	2500	353.0	353.0	32.0
TL072BCDR	SOIC	D	8	2500	356.0	356.0	35.0
TL072CDR	SOIC	D	8	2500	356.0	356.0	35.0
TL072CDR	SOIC	D	8	2500	356.0	356.0	35.0
TL072CPSR	SO	PS	8	2000	356.0	356.0	35.0
TL072CPWR	TSSOP	PW	8	2000	356.0	356.0	35.0
TL072CPWR	TSSOP	PW	8	2000	356.0	356.0	35.0

Device	Package Type	Package Drawing	Pins	SPQ	Length (mm)	Width (mm)	Height (mm)
TL072HIDDFR	SOT-23-THIN	DDF	8	3000	210.0	185.0	35.0
TL072HIDR	SOIC	D	8	3000	356.0	356.0	35.0
TL072HIPWR	TSSOP	PW	8	3000	356.0	356.0	35.0
TL072IDR	SOIC	D	8	2500	353.0	353.0	32.0
TL072IDR	SOIC	D	8	2500	356.0	356.0	35.0
TL072IDR	SOIC	D	8	2500	356.0	356.0	35.0
TL074ACDR	SOIC	D	14	2500	353.0	353.0	32.0
TL074ACDR	SOIC	D	14	2500	356.0	356.0	35.0
TL074ACNSR	SO	NS	14	2000	356.0	356.0	35.0
TL074BCDR	SOIC	D	14	2500	353.0	353.0	32.0
TL074BCDR	SOIC	D	14	2500	356.0	356.0	35.0
TL074CDBR	SSOP	DB	14	2000	356.0	356.0	35.0
TL074CDR	SOIC	D	14	2500	353.0	353.0	32.0
TL074CDR	SOIC	D	14	2500	356.0	356.0	35.0
TL074CDRG4	SOIC	D	14	2500	356.0	356.0	35.0
TL074CNSR	SO	NS	14	2000	356.0	356.0	35.0
TL074CPWR	TSSOP	PW	14	2000	356.0	356.0	35.0
TL074CPWR	TSSOP	PW	14	2000	356.0	356.0	35.0
TL074HIDR	SOIC	D	14	2500	356.0	356.0	35.0
TL074HIDYYR	SOT-23-THIN	DYY	14	3000	336.6	336.6	31.8
TL074HIPWR	TSSOP	PW	14	2000	356.0	356.0	35.0
TL074IDR	SOIC	D	14	2500	356.0	356.0	35.0

TUBE

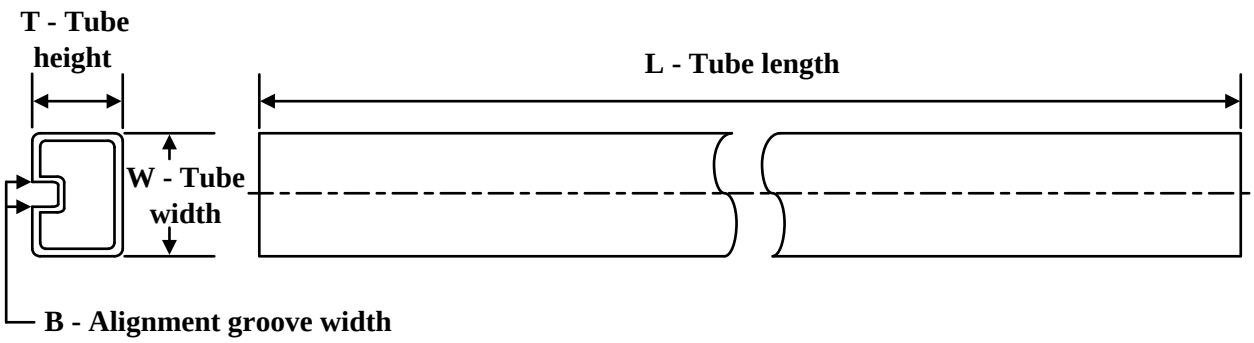

*All dimensions are nominal

Device	Package Name	Package Type	Pins	SPQ	L (mm)	W (mm)	T (µm)	B (mm)
81023052A	FK	LCCC	20	55	506.98	12.06	2030	NA
8102305HA	U	CFP	10	25	506.98	26.16	6220	NA
81023062A	FK	LCCC	20	55	506.98	12.06	2030	NA
8102306DA	W	CFP	14	25	506.98	26.16	6220	NA
TL071ACP	P	PDIP	8	50	506	13.97	11230	4.32
TL071BCP	P	PDIP	8	50	506	13.97	11230	4.32
TL071CP	P	PDIP	8	50	506	13.97	11230	4.32
TL071IP	P	PDIP	8	50	506	13.97	11230	4.32
TL072ACP	P	PDIP	8	50	506	13.97	11230	4.32
TL072ACPS	PS	SOP	8	80	530	10.5	4000	4.1
TL072BCP	P	PDIP	8	50	506	13.97	11230	4.32
TL072CP	P	PDIP	8	50	506	13.97	11230	4.32
TL072CPS	PS	SOP	8	80	530	10.5	4000	4.1
TL072IP	P	PDIP	8	50	506	13.97	11230	4.32
TL072MFKB	FK	LCCC	20	55	506.98	12.06	2030	NA
TL072MUB	U	CFP	10	25	506.98	26.16	6220	NA
TL074ACN	N	PDIP	14	25	506	13.97	11230	4.32
TL074ACN	N	PDIP	14	25	506	13.97	11230	4.32
TL074BCN	N	PDIP	14	25	506	13.97	11230	4.32
TL074BCN	N	PDIP	14	25	506	13.97	11230	4.32
TL074CN	N	PDIP	14	25	506	13.97	11230	4.32
TL074CN	N	PDIP	14	25	506	13.97	11230	4.32
TL074IN	N	PDIP	14	25	506	13.97	11230	4.32
TL074MFK	FK	LCCC	20	55	506.98	12.06	2030	NA
TL074MFKB	FK	LCCC	20	55	506.98	12.06	2030	NA
TL074MWB	W	CFP	14	25	506.98	26.16	6220	NA