TAPE AND REEL INFORMATION

REEL DIMENSIONS

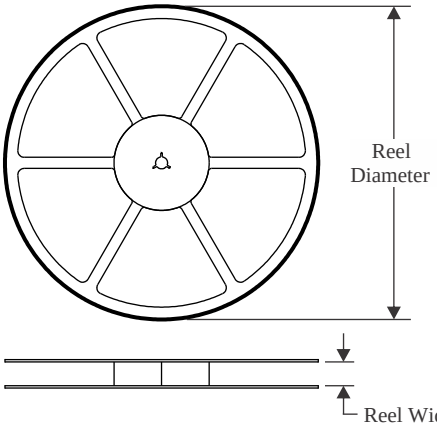

TAPE DIMENSIONS

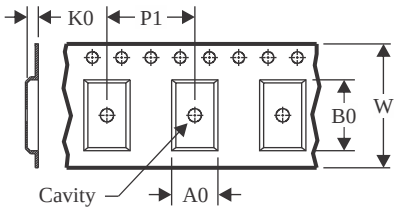

A0	Dimension designed to accommodate the component width
B0	Dimension designed to accommodate the component length
K0	Dimension designed to accommodate the component thickness
W	Overall width of the carrier tape
P1	Pitch between successive cavity centers

QUADRANT ASSIGNMENTS FOR PIN 1 ORIENTATION IN TAPE

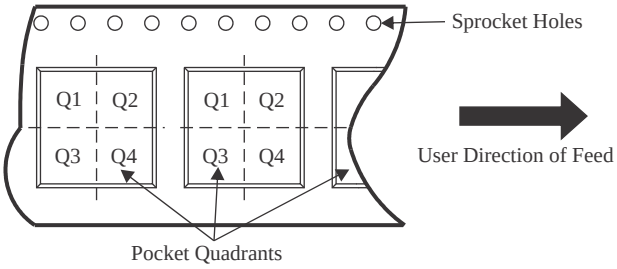

*All dimensions are nominal

Device	Package Type	Package Drawing	Pins	SPQ	Reel Diameter (mm)	Reel Width W1 (mm)	A0 (mm)	B0 (mm)	K0 (mm)	P1 (mm)	W (mm)	Pin1 Quadrant
TLV341AIDBVR	SOT-23	DBV	6	3000	180.0	8.4	3.2	3.2	1.4	4.0	8.0	Q3
TLV341AIDCKR	SC70	DCK	6	3000	179.0	8.4	2.2	2.5	1.2	4.0	8.0	Q3
TLV341IDBVR	SOT-23	DBV	6	3000	179.0	8.4	3.2	3.2	1.4	4.0	8.0	Q3
TLV341IDCKR	SC70	DCK	6	3000	179.0	8.4	2.2	2.5	1.2	4.0	8.0	Q3
TLV341IDRLR	SOT-5X3	DRL	6	4000	180.0	8.4	1.98	1.78	0.69	4.0	8.0	Q3
TLV342AIDR	SOIC	D	8	2500	330.0	12.4	6.4	5.2	2.1	8.0	12.0	Q1
TLV342AIDR	SOIC	D	8	2500	330.0	12.4	6.4	5.2	2.1	8.0	12.0	Q1
TLV342IDGKR	VSSOP	DGK	8	2500	330.0	12.4	5.3	3.4	1.4	8.0	12.0	Q1
TLV342IDGKR	VSSOP	DGK	8	2500	330.0	12.4	5.3	3.4	1.4	8.0	12.0	Q1
TLV342IDR	SOIC	D	8	2500	330.0	12.4	6.4	5.2	2.1	8.0	12.0	Q1
TLV342IDR	SOIC	D	8	2500	330.0	12.4	6.4	5.2	2.1	8.0	12.0	Q1
TLV342IRUGR	X2QFN	RUG	10	3000	180.0	8.4	1.75	2.25	0.55	4.0	8.0	Q1
TLV342SIRUGR	X2QFN	RUG	10	3000	180.0	8.4	1.75	2.25	0.55	4.0	8.0	Q1

TAPE AND REEL BOX DIMENSIONS

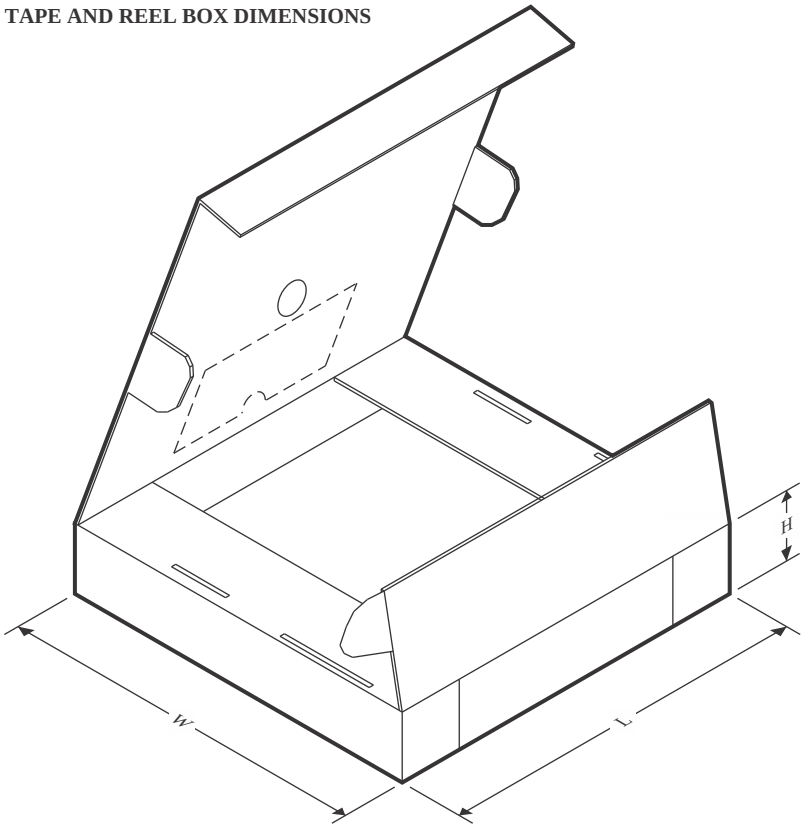

*All dimensions are nominal

Device	Package Type	Package Drawing	Pins	SPQ	Length (mm)	Width (mm)	Height (mm)
TLV341AIDBVR	SOT-23	DBV	6	3000	200.0	183.0	25.0
TLV341AIDCKR	SC70	DCK	6	3000	200.0	183.0	25.0
TLV341IDBVR	SOT-23	DBV	6	3000	200.0	183.0	25.0
TLV341IDCKR	SC70	DCK	6	3000	200.0	183.0	25.0
TLV341IDRLR	SOT-5X3	DRL	6	4000	202.0	201.0	28.0
TLV342AIDR	SOIC	D	8	2500	367.0	367.0	35.0
TLV342AIDR	SOIC	D	8	2500	353.0	353.0	32.0
TLV342IDGKR	VSSOP	DGK	8	2500	358.0	335.0	35.0
TLV342IDGKR	VSSOP	DGK	8	2500	366.0	364.0	50.0
TLV342IDR	SOIC	D	8	2500	353.0	353.0	32.0
TLV342IDR	SOIC	D	8	2500	367.0	367.0	35.0
TLV342IRUGR	X2QFN	RUG	10	3000	210.0	185.0	35.0
TLV342SIRUGR	X2QFN	RUG	10	3000	210.0	185.0	35.0