## TAPE AND REEL INFORMATION

**REEL DIMENSIONS**

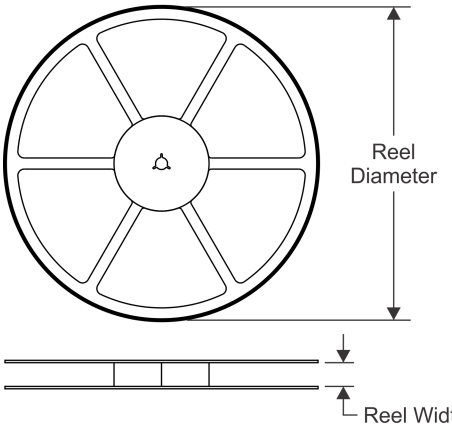


**TAPE DIMENSIONS**

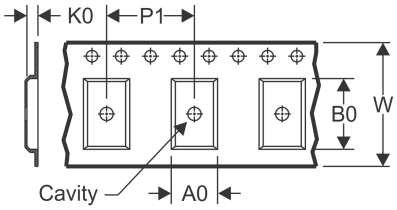


| | |
|---|---|
| A0 | Dimension designed to accommodate the component width |
| B0 | Dimension designed to accommodate the component length |
| K0 | Dimension designed to accommodate the component thickness |
| W | Overall width of the carrier tape |
| P1 | Pitch between successive cavity centers |

**QUADRANT ASSIGNMENTS FOR PIN 1 ORIENTATION IN TAPE**

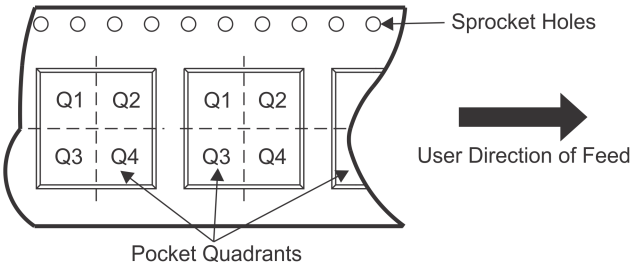


*All dimensions are nominal

| Device | Package Type | Package Drawing | Pins | SPQ | Reel Diameter (mm) | Reel Width W1 (mm) | A0 (mm) | B0 (mm) | K0 (mm) | P1 (mm) | W (mm) | Pin1 Quadrant |
|---|---|---|---|---|---|---|---|---|---|---|---|---|
| TPL0401A-10QDCKRQ1 | SC70 | DCK | 6 | 3000 | 180.0 | 8.4 | 2.47 | 2.3 | 1.25 | 4.0 | 8.0 | Q3 |
| TPL0401B-10QDCKRQ1 | SC70 | DCK | 6 | 3000 | 180.0 | 8.4 | 2.47 | 2.3 | 1.25 | 4.0 | 8.0 | Q3 |

**TAPE AND REEL BOX DIMENSIONS**

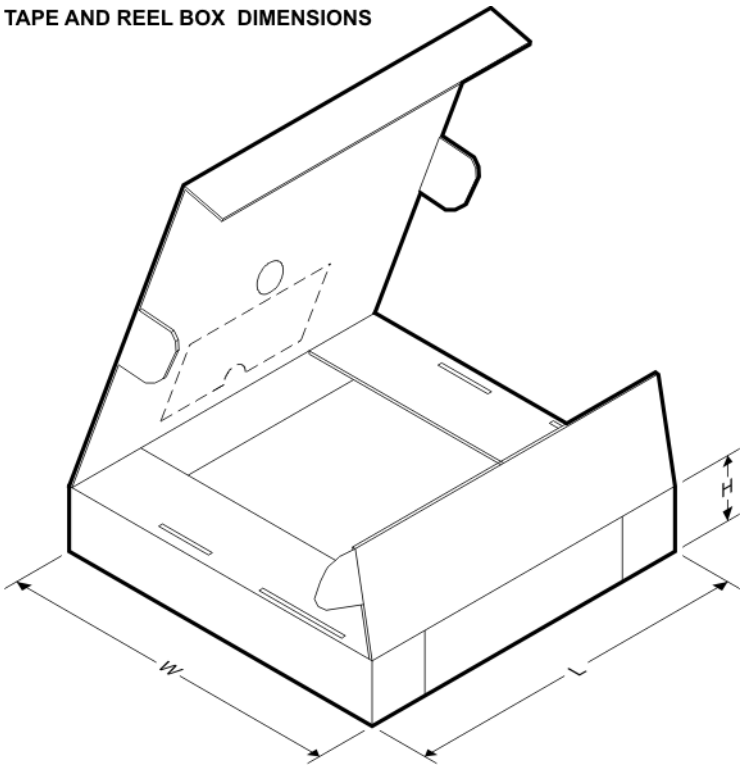


*All dimensions are nominal

| Device | Package Type | Package Drawing | Pins | SPQ | Length (mm) | Width (mm) | Height (mm) |
|---|---|---|---|---|---|---|---|
| TPL0401A-10QDCKRQ1 | SC70 | DCK | 6 | 3000 | 223.0 | 270.0 | 35.0 |
| TPL0401B-10QDCKRQ1 | SC70 | DCK | 6 | 3000 | 223.0 | 270.0 | 35.0 |