TAPE AND REEL INFORMATION

REEL DIMENSIONS

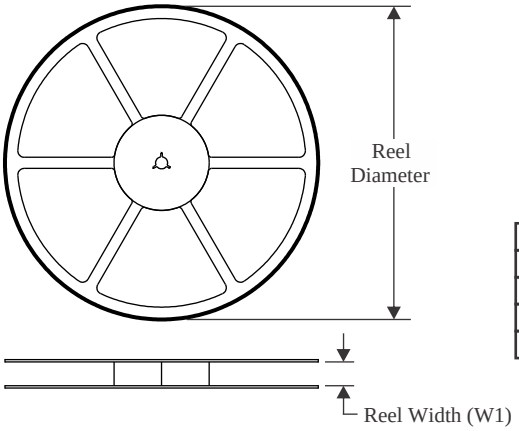

TAPE DIMENSIONS

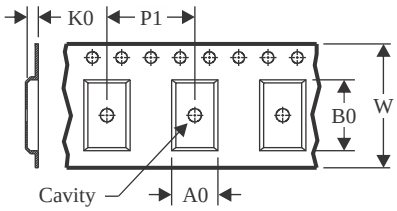

A0	Dimension designed to accommodate the component width
B0	Dimension designed to accommodate the component length
K0	Dimension designed to accommodate the component thickness
W	Overall width of the carrier tape
P1	Pitch between successive cavity centers

QUADRANT ASSIGNMENTS FOR PIN 1 ORIENTATION IN TAPE

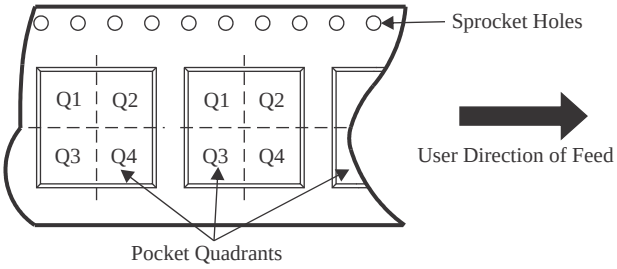

*All dimensions are nominal

Device	Package Type	Package Drawing	Pins	SPQ	Reel Diameter (mm)	Reel Width W1 (mm)	A0 (mm)	B0 (mm)	K0 (mm)	P1 (mm)	W (mm)	Pin1 Quadrant
TPS54260DGQR	HVSSOP	DGQ	10	2500	330.0	12.4	5.3	3.3	1.3	8.0	12.0	Q1
TPS54260DGQR	HVSSOP	DGQ	10	2500	330.0	12.4	5.3	3.4	1.4	8.0	12.0	Q1
TPS54260DGQR	HVSSOP	DGQ	10	2500	330.0	12.4	5.3	3.4	1.4	8.0	12.0	Q1
TPS54260DRCR	VSON	DRC	10	3000	330.0	12.4	3.3	3.3	1.1	8.0	12.0	Q2
TPS54260DRCT	VSON	DRC	10	250	180.0	12.5	3.3	3.3	1.1	8.0	12.0	Q2
TPS54260DRCT	VSON	DRC	10	250	180.0	12.4	3.3	3.3	1.0	8.0	12.0	Q2

TAPE AND REEL BOX DIMENSIONS

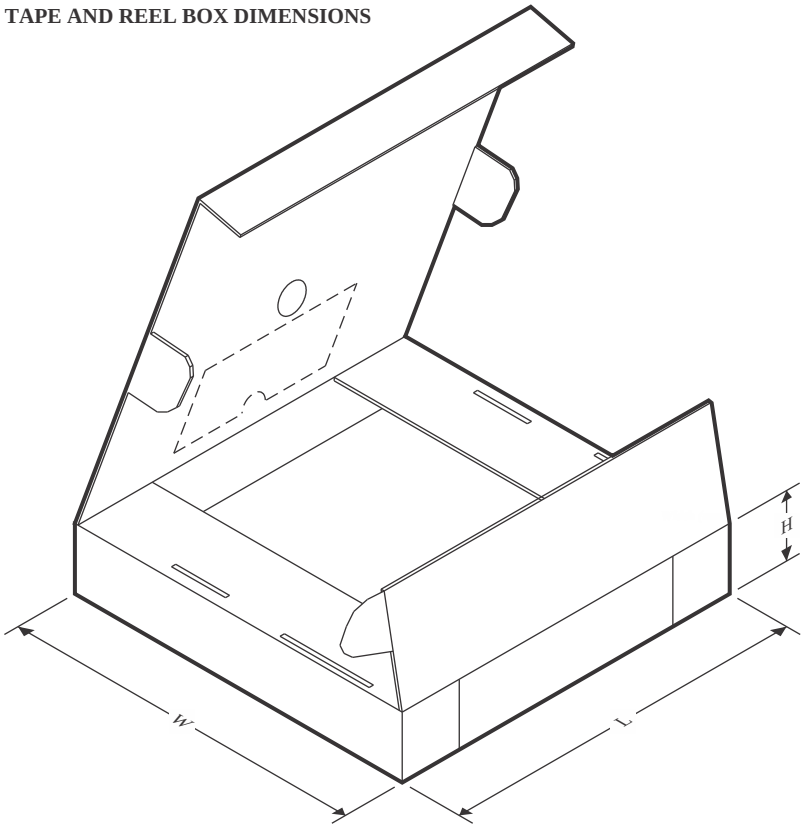

*All dimensions are nominal

Device	Package Type	Package Drawing	Pins	SPQ	Length (mm)	Width (mm)	Height (mm)
TPS54260DGQR	HVSSOP	DGQ	10	2500	346.0	346.0	35.0
TPS54260DGQR	HVSSOP	DGQ	10	2500	364.0	364.0	27.0
TPS54260DGQR	HVSSOP	DGQ	10	2500	366.0	364.0	50.0
TPS54260DRCR	VSON	DRC	10	3000	338.0	355.0	50.0
TPS54260DRCT	VSON	DRC	10	250	205.0	200.0	33.0
TPS54260DRCT	VSON	DRC	10	250	200.0	183.0	25.0

TUBE

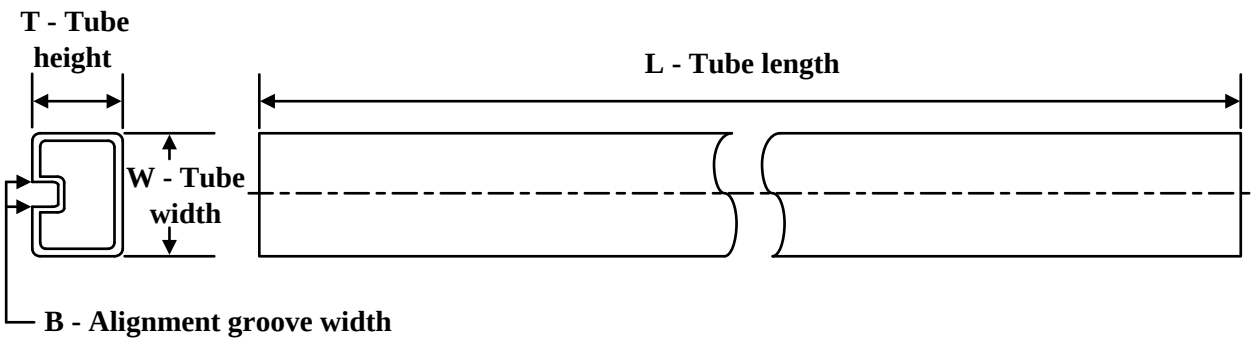

*All dimensions are nominal

Device	Package Name	Package Type	Pins	SPQ	L (mm)	W (mm)	T (µm)	B (mm)
TPS54260DGQ	DGQ	HVSSOP	10	80	330	6.55	500	2.88
TPS54260DGQ	DGQ	HVSSOP	10	80	322	6.55	1000	3.01