Universal SOT23 LDO Tester (SLVP125) Assembly File

Effective Date: 09/10/99
Current EVM Rev: D

TEXAS INSTRUMENTS

Table of Contents

Introduction..... 3
PCB Fabrication Notes..... 3
Schematic..... 4
Bill of Materials 6
Component Locations 8
Artwork 11
Assembly Drawings 12
Test Setup 13
Revision History 14

Introduction

This document is intended to assist in the fabrication of the Universal SOT23 LDO Test and Evaluation modules from Texas Instruments. This EVM is designed to be used by the end user in the evaluation of multiple SOT23 LDOs.

PCB Fabrication Notes

Board Number:	SLVP125
Current Board Revision:	D
Current Revision Date:	08/20/99
Board Size:	3.35"(L) x 2.525"(W) x 0.062"(T)
Board Material:	FR4
Number of Layers:	2
Copper Thickness:	2 oz
Minimum Trace Width:	10 mils
Minimum Separation:	10 mils
Silk Screen:	Top Side only, White
Solder Mask:	Two sides, green (SMOBC)
Gold Contacts:	None

Hole Information

Diameter	Qty
18.0 mil	41
24.0 mil	24
28.0 mil	12
38.0 mil	82
40.0 mil	8
46.0 mil	8
73.0 mil	4
140.0 mil	4

Schematic

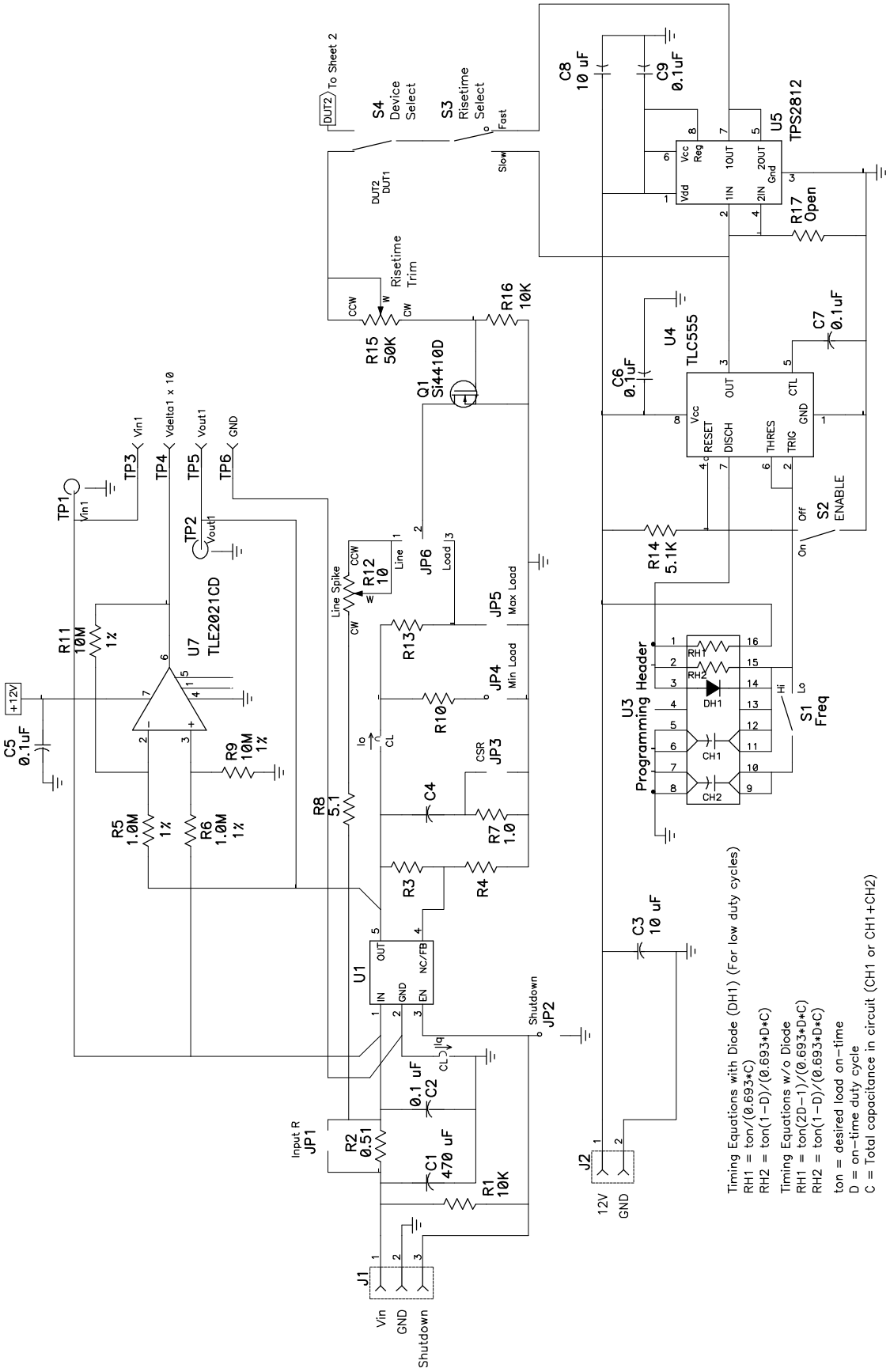
To Sheet 2
S4 Device Select
S3 Risetime Select
Fast
Slow
Risetime Trim
R15 50K
R16 10K
Q1 Si4410D
C8 10 uF
C9 0.1uF
U5 TPS2812
R17 Open
U4 TLC555
C6 0.1uF
C7 0.1uF
S2 ENABLE
R14 5.1K
U3 Programming Header
S1 Freq
TP1
TP2
TP3
TP4
TP5
TP6
Vin1
Vdelta1 x 10
Vout1
GND
+12V
C5 0.1uF
R11 10M 1%
U7 TLE2021CD
R5 1.0M 1%
R6 1.0M 1%
R9 10M 1%
R8 5.1
R12 10
JP6
JP5 Max Load
JP4 Min Load
R13
R10
JP3
C4
R7 1.0
R3
R4
U1
Shutdown JP2
C3 10 uF
Input R JP1
R2 0.51
C2 0.1 uF
C1 470 uF
R1 10K
J1
Vin
GND
Shutdown
J2
12V
GND
Timing Equations with Diode (DH1) (For low duty cycles)
RH1 = ton/(0.693*C)
RH2 = ton(1-D)/(0.693*D*C)
Timing Equations w/o Diode
RH1 = ton(2D-1)/(0.693*D*C)
RH2 = ton(1-D)/(0.693*D*C)
ton = desired load on-time
D = on-time duty cycle
C = Total capacitance in circuit (CH1 or CH1+CH2)

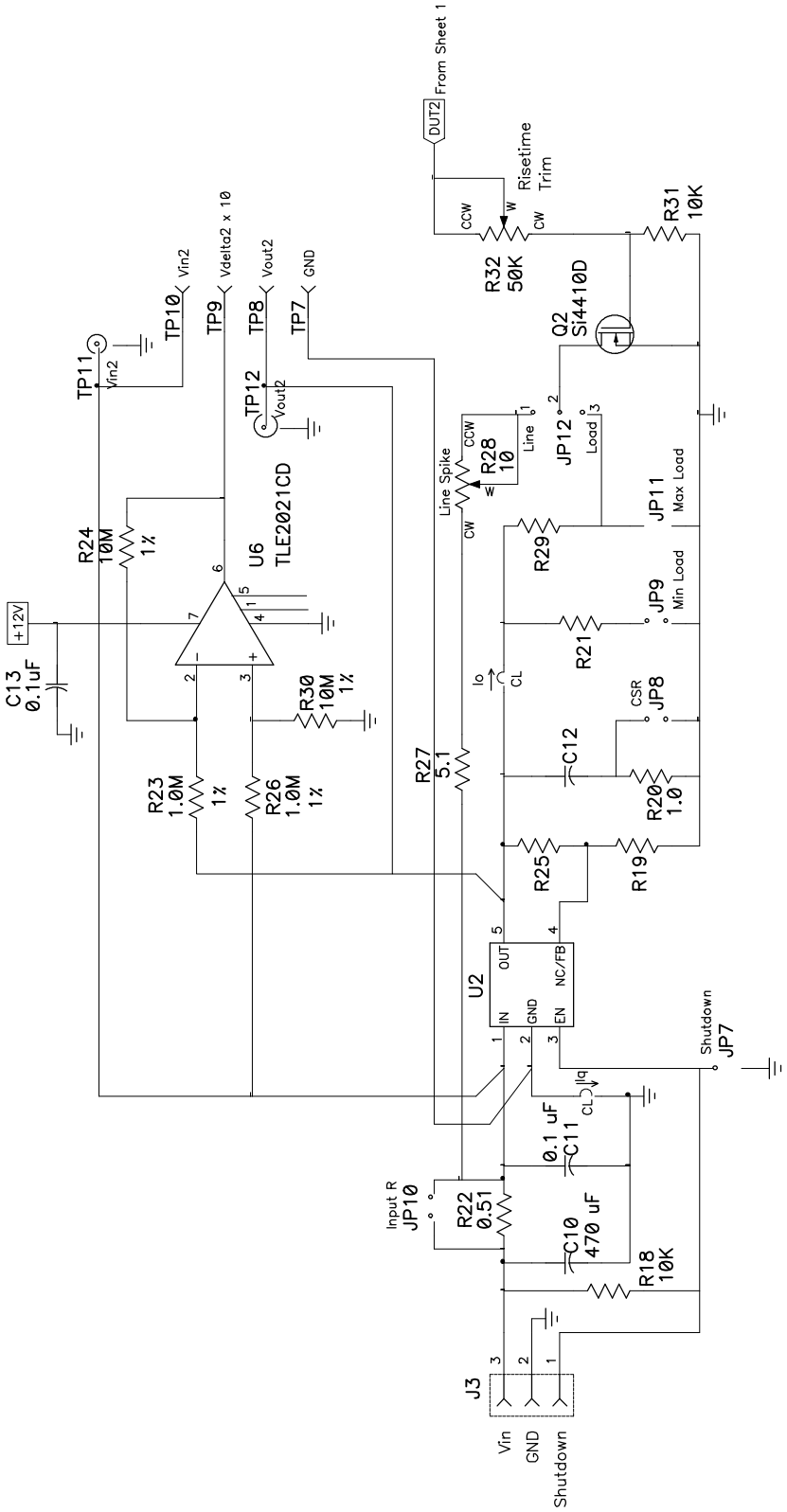
From Sheet 1
DUT2
Risetime
Trim
CCW
CW
R32
50K
R31
10K
Q2
Si4410D
TP10
Vin2
TP9
Vdelta2 x 10
TP8
Vout2
TP7
GND
TP11
Vin2
TP12
Vout2
R24
10M
1%
U6
TLE2021CD
+12V
C13
0.1uF
R30
10M
1%
R23
1.0M
1%
R26
1.0M
1%
R27
5.1
Line Spike
R28
10
Line
JP12
Load
JP11
Max Load
R29
JP9
Min Load
R21
Io
CL
CSR
JP8
C12
R20
1.0
R25
R19
U2
OUT
NC/FB
IN
GND
EN
Shutdown
JP7
Iq
CL
0.1 uF
C11
Input R
JP10
R22
0.51
C10
470 uF
R18
10K
J3
Vin
GND
Shutdown

Bill of Materials

Ref	PN	Description	Mfg	Size
C1	16SA470M	Capacitor, OS-Con, 470uF, 16V, 20-mOhm, 20%	Sanyo	G
C1 (Alt)	16SP470M	Capacitor, OS-Con, 470uF, 16V, 10-mOhm, 20%	Sanyo	G
C2	ECU-V1H104KBW	Capacitor, Ceramic, 0.1uF, 50V, X7R, 10%	Panasonic	1206
C3	GRM235Y5V106Z016A	Capacitor, Ceramic, 10uF, 16V, Y5V, -20% +80%	muRata	1210
C4	GRM235Y5V106Z016A	Capacitor, Ceramic, 10uF, 16V, Y5V, -20% +80%	muRata	1210
C5	ECU-V1H104KBW	Capacitor, Ceramic, 0.1uF, 50V, X7R, 10%	Panasonic	1206
C6	ECU-V1H104KBW	Capacitor, Ceramic, 0.1uF, 50V, X7R, 10%	Panasonic	1206
C7	ECU-V1H104KBW	Capacitor, Ceramic, 0.1uF, 50V, X7R, 10%	Panasonic	1206
C8	GRM235Y5V106Z016A	Capacitor, Ceramic, 10uF, 16V, Y5V, -20% +80%	muRata	1210
C9	ECU-V1H104KBW	Capacitor, Ceramic, 0.1uF, 50V, X7R, 10%	Panasonic	1206
C10	16SA470M	Capacitor, OS-Con, 470uF, 16V, 20-mOhm, 20%	Sanyo	G
C10 (Alt)	16SP470M	Capacitor, OS-Con, 470uF, 16V, 10-mOhm, 20%	Sanyo	G
C11	ECU-V1H104KBW	Capacitor, Ceramic, 0.1uF, 50V, X7R, 10%	Panasonic	1206
C12		Capacitor, User Option		1210/1206
C13	ECU-V1H104KBW	Capacitor, Ceramic, 0.1uF, 50V, X7R, 10%	Panasonic	1206
J1	ED1515-ND	Terminal Block, 3-Pin, 6A, 3.5mm	OST	3.5mm
J2	ED1514-ND	Terminal Block, 2-Pin, 6A, 3.5mm	OST	3.5mm
J3	ED1515-ND	Terminal Block, 3-Pin, 6A, 3.5mm	OST	3.5mm
JP1	PTC36SAAN	Header, Single-row, Straight, 2-pin, 0.100" x 25 mil	Sullins	0.1"
JP2	PTC36SAAN	Header, Single-row, Straight, 2-pin, 0.100" x 25 mil	Sullins	0.1"
JP3	PTC36SAAN	Header, Single-row, Straight, 2-pin, 0.100" x 25 mil	Sullins	0.1"
JP4	PTC36SAAN	Header, Single-row, Straight, 2-pin, 0.100" x 25 mil	Sullins	0.1"
JP5	PTC36SAAN	Header, Single-row, Straight, 2-pin, 0.100" x 25 mil	Sullins	0.1"
JP6	PTC36SAAN	Header, Single-row, Straight, 3-pin, 0.100" x 25 mil	Sullins	0.1"
JP7	PTC36SAAN	Header, Single-row, Straight, 2-pin, 0.100" x 25 mil	Sullins	0.1"
JP8	PTC36SAAN	Header, Single-row, Straight, 2-pin, 0.100" x 25 mil	Sullins	0.1"
JP9	PTC36SAAN	Header, Single-row, Straight, 2-pin, 0.100" x 25 mil	Sullins	0.1"
JP10	PTC36SAAN	Header, Single-row, Straight, 2-pin, 0.100" x 25 mil	Sullins	0.1"
JP11	PTC36SAAN	Header, Single-row, Straight, 2-pin, 0.100" x 25 mil	Sullins	0.1"
JP12	PTC36SAAN	Header, Single-row, Straight, 3-pin, 0.100" x 25 mil	Sullins	0.1"
Q1	Si4410DY	MOSFET, N-ch, 30-V, 10-A, 13-milliohm	Silconix	SO-8
Q2	Si4410DY	MOSFET, N-ch, 30-V, 10-A, 13-milliohm	Silconix	SO-8
R1	Std	Resistor, Chip, 10K Ohms, 1/8W, 5%		1206
R2	Std	Resistor, Chip, 0.51 Ohms, 1/8W, 5%		1206
R3	Std	Resistor, Chip, User Option, 1/8W, 1%		1206
R4	Std	Resistor, Chip, User Option, 1/8W, 1%		1206
R5	Std	Resistor, Chip, 1.00M Ohms, 1/8W, 1%		1206
R6	Std	Resistor, Chip, 1.00M Ohms, 1/8W, 1%		1206
R7	Std	Resistor, Chip, 1.0 Ohm, 1/8W, 5%		1206
R8	Std	Resistor, Chip, 5.1 Ohms, 1/8W, 5%		1206
R9	Std	Resistor, Chip, 10.0M Ohms, 1/8W, 1%		1206
R10	Std	Resistor, Chip, User Option, 1/8W, 1%		1206
R11	Std	Resistor, Chip, 10.0M Ohms, 1/8W, 1%		1206
R12	72-T93YA-10	Trim Pot, Cermet, 10 Ohms, Vertical, Top adjust, 1/2W, 10%	Vishay	3x 0.1"
R13	Std	Resistor, Chip, User Option, 1/8-1W, 1%		1206/2512

R14	Std	Resistor, CF, 5.1K Ohms, 1/8W, 5%		1206
R15	72-T93YA-50K	Trim Pot, Cermet, 50K Ohms, Vertical, Top adjust, 1/2W, 10%	Vishay	3x 0.1"
R16	Std	Resistor, Chip, 10K Ohms, 1/8W, 5%		1206
R17	Std	Resistor, Chip, User Option, 1/8W, 5%		1206
R18	Std	Resistor, Chip, 10K Ohms, 1/8W, 5%		1206
R19	Std	Resistor, Chip, User Option, 1/8W, 1%		1206
R20	Std	Resistor, Chip, 1.0 Ohm, 1/8W, 5%		1206
R21	Std	Resistor, Chip, User Option, 1/8W, 1%		1206
R22	Std	Resistor, Chip, 0.51 Ohms, 1/8W, 5%		1206
R23	Std	Resistor, Chip, 1.00M Ohms, 1/8W, 1%		1206
R24	Std	Resistor, Chip, 10.0M Ohms, 1/8W, 1%		1206
R25	Std	Resistor, Chip, User Option, 1/8W, 1%		1206
R26	Std	Resistor, Chip, 1.00M Ohms, 1/8W, 1%		1206
R27	Std	Resistor, Chip, 5.1 Ohms, 1/8W, 5%		1206
R28	72-T93YA-10	Trim Pot, Cermet, 10 Ohms, Vertical, Top adjust, 1/2W, 10%	Vishay	3x 0.1"
R29	Std	Resistor, Chip, User Option, 1/8-1W, 1%		1206/2512
R30	Std	Resistor, Chip, 10.0M Ohms, 1/8W, 1%		1206
R31	Std	Resistor, Chip, 10K Ohms, 1/8W, 5%		1206
R32	72-T93YA-50K	Trim Pot, Cermet, 50K Ohms, Vertical, Top adjust, 1/2W, 10%	Vishay	3x 0.1"
S1	EG1218	Switch, 1P2T, Slide, PC-mount	E-Switch	0.1"
S2	EG1218	Switch, 1P2T, Slide, PC-mount	E-Switch	0.1"
S3	EG1218	Switch, 1P2T, Slide, PC-mount	E-Switch	0.1"
S4	EG1218	Switch, 1P2T, Slide, PC-mount	E-Switch	0.1"
TP1	131-4244-00	Adaptor, 3.5-mm probe clip (or 131-5031-00)	Tektronix	
TP2	131-4244-00	Adaptor, 3.5-mm probe clip (or 131-5031-00)	Tektronix	
TP3	240-345	Test Point, Red	Farnell	1 mm
TP4	240-345	Test Point, Red	Farnell	1 mm
TP5	240-345	Test Point, Red	Farnell	1 mm
TP6	240-333	Test Point, Black	Farnell	1 mm
TP7	240-333	Test Point, Black	Farnell	1 mm
TP8	240-345	Test Point, Red	Farnell	1 mm
TP9	240-345	Test Point, Red	Farnell	1 mm
TP10	240-345	Test Point, Red	Farnell	1 mm
TP11	131-4244-00	Adaptor, 3.5-mm probe clip (or 131-5031-00)	Tektronix	
TP12	131-4244-00	Adaptor, 3.5-mm probe clip (or 131-5031-00)	Tektronix	
CL1-4	Std	Wire, AWG#20, Insulated, 3” each		
Jumpers	Std	Wire, AWG#22, Solid, Bus (Use in place of U1 socket, 12 places)		
U1		IC, LDO, DUT	TI	Various
U2		IC, LDO, DUT	TI	Various
U3	110-99-316-41-001	Socket, 16-pin, Frequency programming	Mill-Max	DIP-16
U4	TLC555CD	IC, CMOS Timer	TI	SO-8
U5	TPS2812D	IC, MOSFET Driver, 2-Ch, Non-inverting	TI	SO-8
U6	TLE2021CD	IC, OP Amp, Single-supply, Low Offset	TI	SO-8
U7	TLE2021CD	IC, OP Amp, Single-supply, Low Offset	TI	SO-8
XU1/2	04334-121-6215	Socket, Dual SOT-23 w/Kelvin sense (User Option, Not installed)	Loranger	

Component Locations

Units used = mil
Angles are in Degrees.

Name	Layer	Location	Rotation	Fixed
2	Top	1745.0,2545.0	0.0	No
C1	Bottom	890.0,985.0	0.0	No
C2	Top	1155.0,1065.0	90.0	No
C3	Top	3365.0,1890.0	90.0	No
C4	Top	1630.0,1080.0	90.0	No
C5	Top	2320.0,1160.0	0.0	No
C6	Top	3250.0,1890.0	90.0	No
C7	Top	2910.0,1845.0	180.0	No
C8	Top	3365.0,2360.0	90.0	No
C9	Top	3250.0,2365.0	90.0	No
C10	Bottom	905.0,2185.0	180.0	No
C11	Top	1155.0,2005.0	270.0	No
C12	Top	1625.0,1985.0	270.0	No
C13	Top	2310.0,1620.0	0.0	No
CL1	Top	1155.0,955.0	270.0	No
CL2	Top	1745.0,790.0	90.0	No
CL3	Top	1745.0,1960.0	90.0	No
CL4	Top	1155.0,2125.0	90.0	No
DUT1	Top	1180.0,1640.0	0.0	No
J1	Top	600.0,1090.0	0.0	No
J2	Top	3105.0,600.0	90.0	No
J3	Top	605.0,2380.0	0.0	No
JP1	Top	1045.0,1195.0	180.0	No
JP2	Top	565.0,675.0	270.0	No
JP3	Top	1280.0,940.0	0.0	No
JP4	Top	1280.0,815.0	0.0	No
JP5	Top	1280.0,705.0	0.0	No
JP6	Top	1180.0,540.0	0.0	No
JP7	Top	615.0,2585.0	0.0	No
JP8	Top	1265.0,2110.0	0.0	No
JP9	Top	1265.0,2255.0	0.0	No
JP10	Top	1050.0,1875.0	180.0	No
JP11	Top	1270.0,2385.0	0.0	No
JP12	Top	1320.0,2545.0	0.0	No
Q1	Top	2180.0,605.0	180.0	No
Q2	Top	2115.0,2415.0	180.0	No
R1	Top	805.0,975.0	270.0	No
R2	Top	920.0,1085.0	0.0	No
R3	Top	1380.0,1180.0	0.0	No
R4	Top	1515.0,1095.0	180.0	No
R5	Top	2080.0,1380.0	0.0	No

R6	Top	2080.0,1290.0	0.0	No
R7	Top	1635.0,860.0	90.0	No
R8	Top	1045.0,830.0	90.0	No
R9	Top	2220.0,1055.0	90.0	No
R10	Top	1505.0,770.0	0.0	No
R11	Top	2365.0,1500.0	0.0	No
R12	Top	865.0,615.0	0.0	No
R13	Top	1555.0,650.0	0.0	No
R13A	Top	1490.0,650.0	0.0	No
R14	Top	2910.0,2065.0	180.0	No
R15	Top	2580.0,855.0	90.0	No
R16	Top	2300.0,610.0	90.0	No
R17	Top	3295.0,2200.0	180.0	No
R18	Top	815.0,2260.0	270.0	No
R19	Top	1260.0,2005.0	270.0	No
R20	Top	1495.0,2005.0	180.0	No
R21	Top	1625.0,2255.0	180.0	No
R22	Top	925.0,1995.0	0.0	No
R23	Top	2080.0,1815.0	0.0	No
R24	Top	2365.0,1945.0	0.0	No
R25	Top	1495.0,1895.0	180.0	No
R26	Top	2215.0,1730.0	180.0	No
R27	Top	1055.0,2265.0	270.0	No
R28	Top	985.0,2570.0	0.0	No
R29	Top	1540.0,2385.0	0.0	No
R29A	Top	1475.0,2385.0	0.0	No
R30	Top	2215.0,1640.0	270.0	No
R31	Top	2235.0,2420.0	90.0	No
R32	Top	2380.0,2465.0	270.0	No
S1	Top	2835.0,850.0	90.0	No
S2	Top	2835.0,1390.0	90.0	No
S3	Top	2835.0,2315.0	90.0	No
S4	Top	2585.0,2315.0	90.0	No
TP1	Top	645.0,1345.0	90.0	No
TP2	Top	1980.0,1105.0	0.0	No
TP3	Top	645.0,1510.0	0.0	No
TP4	Top	2585.0,1500.0	180.0	No
TP5	Top	1980.0,915.0	0.0	No
TP6	Top	2355.0,1000.0	0.0	No
TP7	Top	2220.0,2065.0	0.0	No
TP8	Top	1980.0,2195.0	0.0	No
TP9	Top	2585.0,1950.0	0.0	No
TP10	Top	650.0,1950.0	0.0	No
TP11	Top	650.0,1745.0	0.0	No
TP12	Top	1980.0,2005.0	0.0	No
U1	Top	1335.0,1335.0	270.0	No

U2	Top	1345.0,1795.0	270.0	No
U3	Top	3020.0,1585.0	0.0	No
U4	Top	3155.0,2065.0	270.0	No
U5	Top	3005.0,2315.0	90.0	No
U6	Top	2310.0,1850.0	0.0	No
U7	Top	2315.0,1410.0	0.0	No

Qty = 93

Artwork

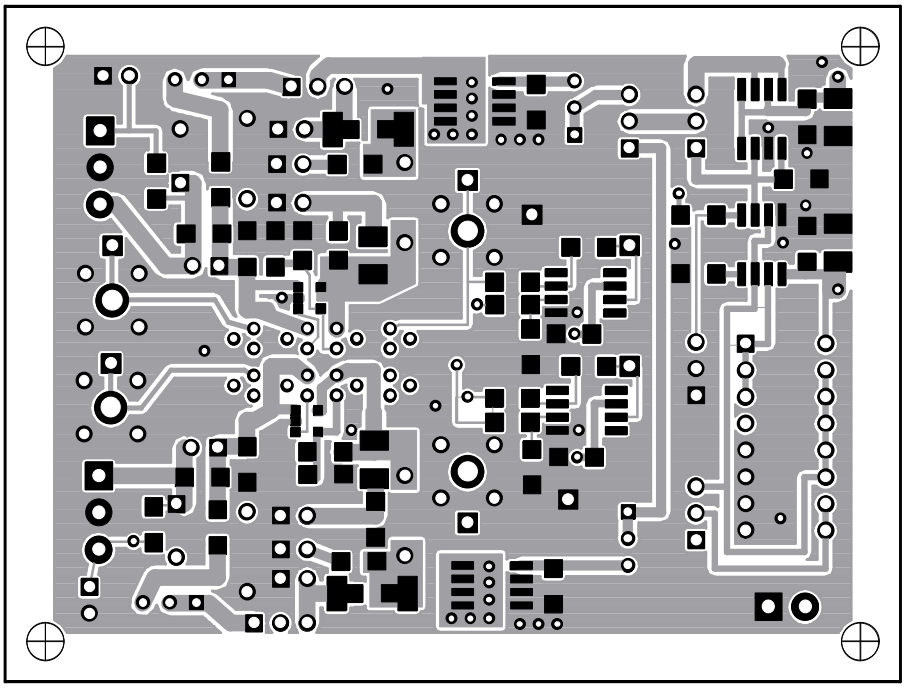

Top Layer

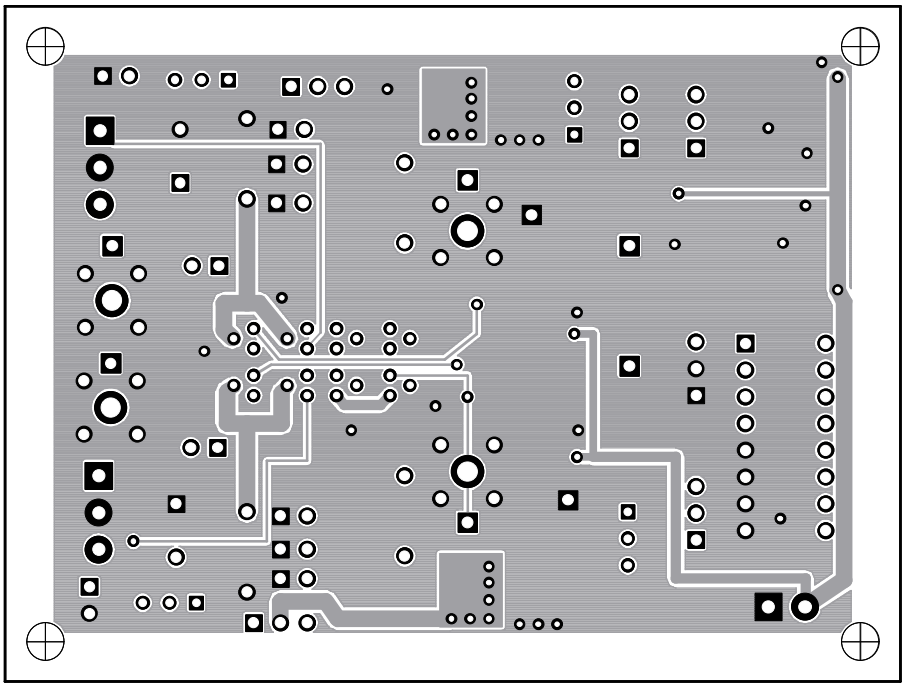

Bottom Layer (Top View)

Assembly Drawings

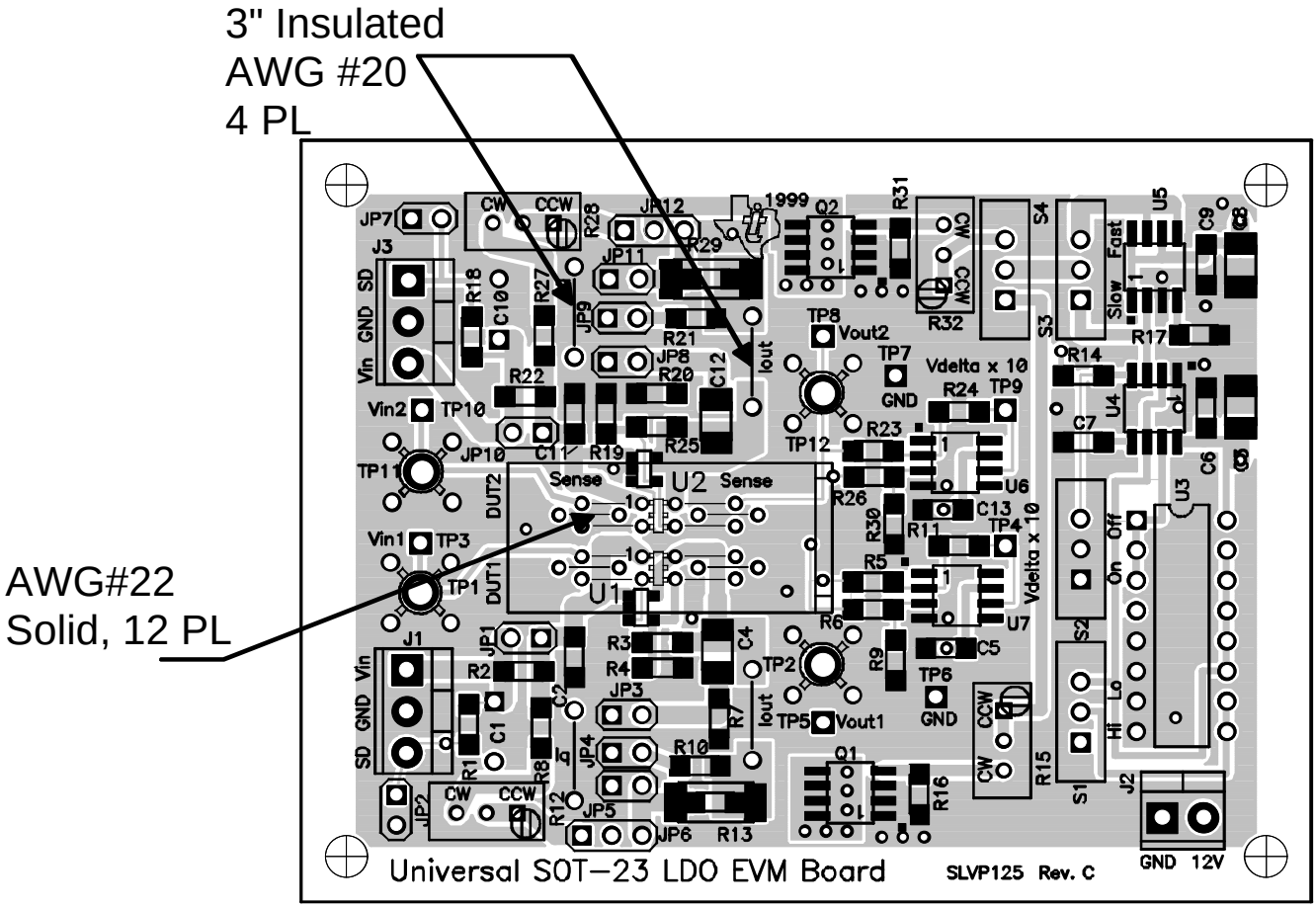

Top Assembly

Test Setup

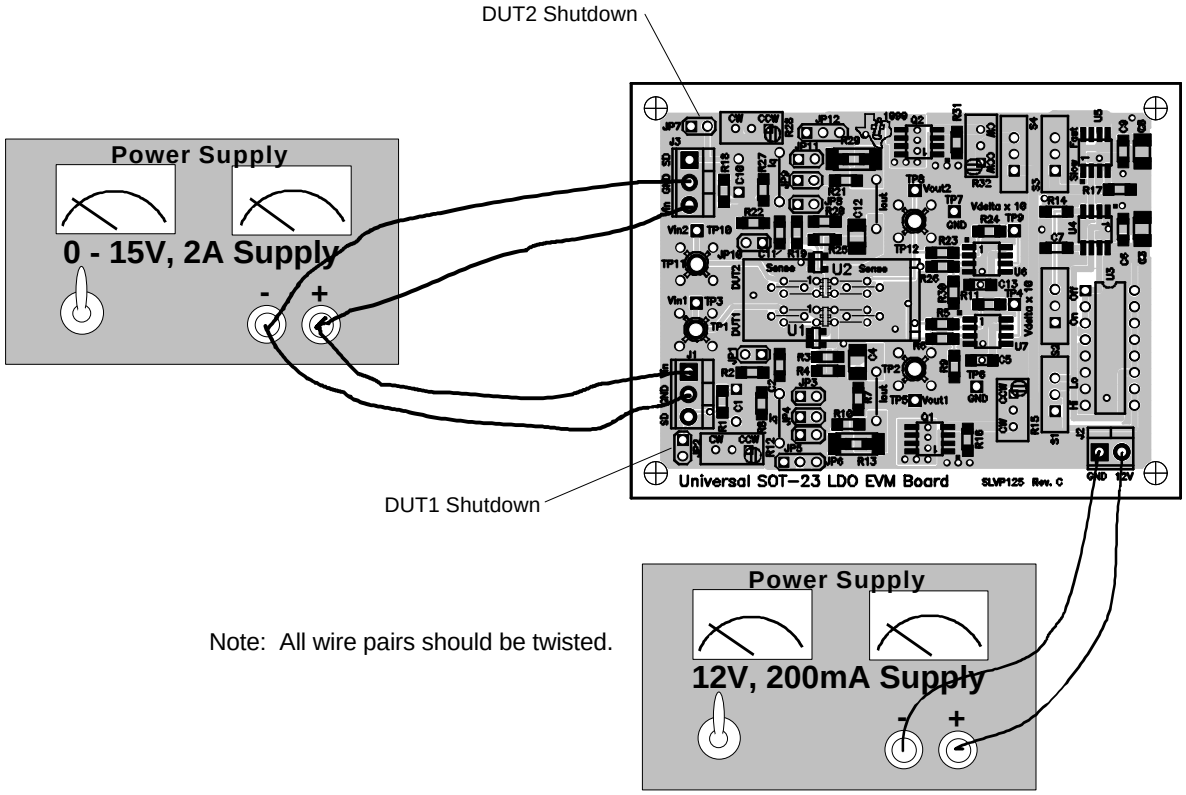

Note: All wire pairs should be twisted.

Active Load Test (All measurements within 10%)

1. Place test header into socket U3.
   Header Component values: RH1 = 3.57K , RH2 = 68.1K, DH1 = 1N4148, CH1 = 0.01uF, CH2 = 0.1 uF
2. Set Enable (S2) on, Frequency Select (S1) to LO and verify waveform at U5-pin 5 is 0-12V, 5%+/-1% duty cycle, and 185 Hz +/- 25Hz Frequency.
3. Set Frequency Select (S1) to Hi and verify waveform at U5-pin 5 is 0-12V, 5% +/-1% duty cycle, and 2KHz +/- 200Hz Frequency.

Differential Amplifier Test

1. Connect 5V to Vin (J1-1), connect JP6-3 to ground. Verify that TP4 reading is 5V +/- 100mV.
2. Connect 5V to Vin (J3-3), connect JP12-3 to ground. Verify that TP9 reading is 5V +/- 100mV.

Revision History

Rev. A 02/17/99
Initial Design

Rev. B 02/24/99
Corrections.

Rev. C 05/26/98
Corrections.

Rev. D 08/20/99
Corrected short on C1+ and open on C1-.