LMG342x Half-Bridge GaN Daughter Card1

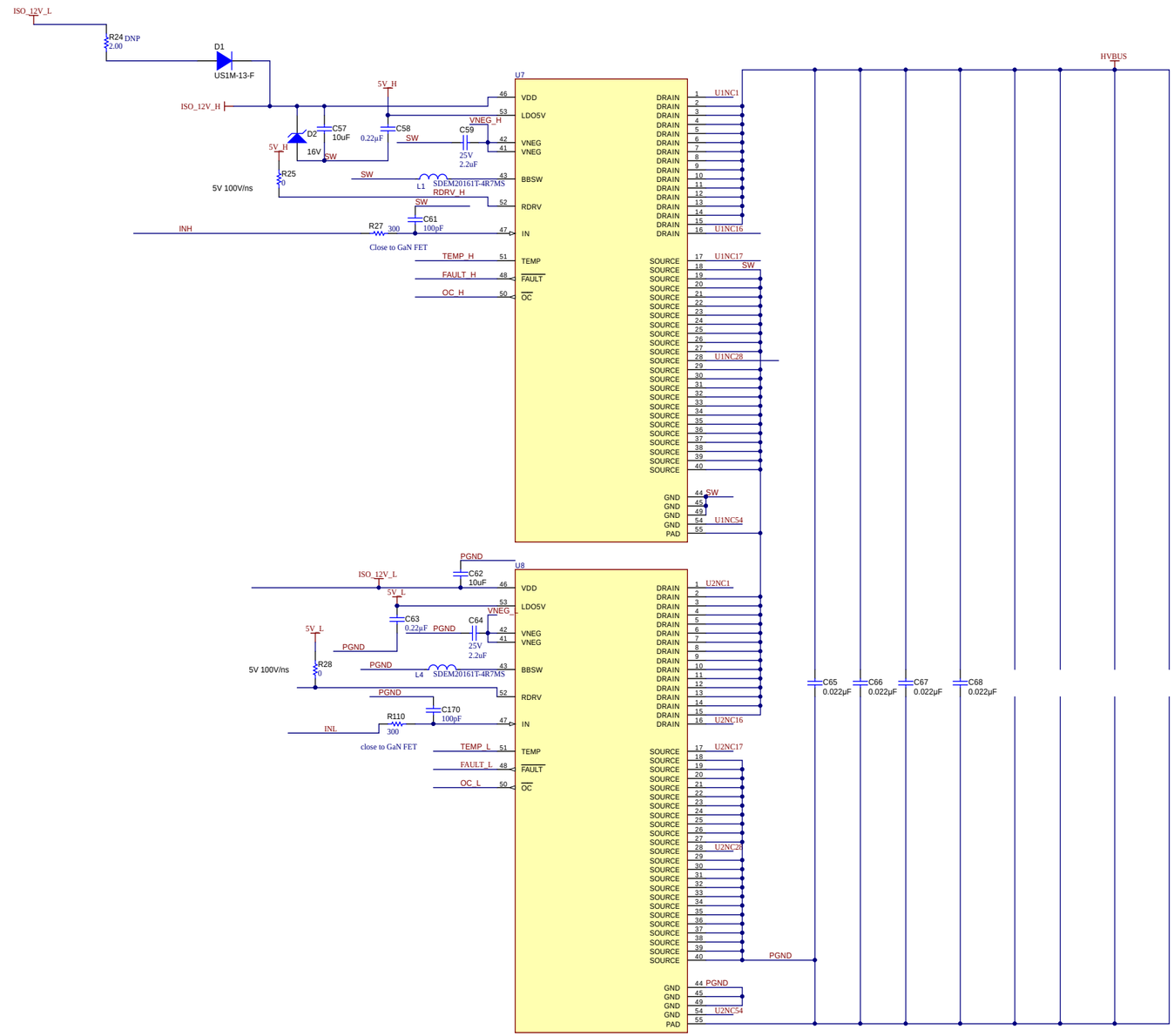

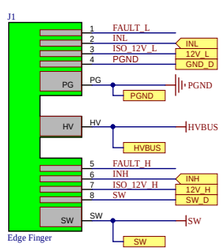

Texas Instruments and/or its licensors do not warrant the accuracy or completeness of this specification or any information contained therein. Texas Instruments and/or its licensors do not warrant that this design will meet the specifications, will be suitable for your application or fit for any particular purpose, or will operate in an implementation. Texas Instruments and/or its licensors do not warrant that the design is production worthy. You should completely validate and test your design implementation to confirm the system functionality for your application.

Orderable: ChangeMe in variant	Designed for: Public Release	Mod. Date: 1/30/2023
TID #: N/A	Project Title: LMG342x Half-Bridge GaN Daughter Card1	
Number: PMP41056 Rev: V1.2	Sheet Title:	
SVN Rev: Not in version control	Assembly Variant: 001	Sheet: 1 of 1
Drawn By: Desheng Guo |Kevin Zeng	File: PMP41056.SchDoc	Size: A2
Engineer: Desheng Guo |Kevin Zeng	Contact: http://www.ti.com/support	

Texas Instruments
http://www.ti.com

© Texas Instruments 2023