bq24600 Stand-Alone Synchronous Switch-Mode Li-Ion or Li-Polymer Battery Charger with Low I_q

1 Features

- 1.2-MHz NMOS-NMOS Synchronous Buck Converter
- Stand-Alone Charger Support for Li-Ion or Li-Polymer
- 5-V – 28-V VCC Input Voltage Range and Supports 1S-6S Battery Cells
- Up to 10-A Charge Current and Adapter Current
- High-Accuracy Voltage and Current Regulation
  - ±0.5% Charge-Voltage Accuracy
  - ±3% Charge-Current Accuracy
- Integration
  - Internal Loop Compensation
  - Internal Soft Start
- Safety
  - Input Overvoltage Protection
  - Battery Thermistor Sense Hot/Cold Charge Suspend
  - Battery Detection
  - Built-In Safety Timer
  - Charge Overcurrent Protection
  - Battery Short Protection
  - Battery Overvoltage Protection
  - Thermal Shutdown
- Status Outputs
  - Adapter Present
  - Charger Operation Status
- Charge Enable Pin
- 6-V Gate Drive for Synchronous Power Converter
- 30-ns Driver Dead-Time and 99.5% Max. Effective Duty Cycle
- 16-Pin 3.5-mm × 3.5-mm QFN package
- Energy Star Low Quiescent Current I_q
  - < 15-µA Off-State Battery Discharge Current
  - < 1.5-mA Off-State Input Quiescent Current

2 Applications

- Portable Equipment Handle Terminals
- Industrial and Medical Equipment
- Power Tools Appliance
- Mobile Internet Device, and Ultra-Mobile PC

3 Description

The bq24600 is a highly integrated Li-ion or Li-polymer switch-mode battery-charge controller. It offers a constant-frequency synchronous PWM controller with high-accuracy charge current and voltage regulation, charge preconditioning, termination, and charge status monitoring,

The bq24600 charges the battery in three phases: preconditioning, constant current, and constant voltage. Charge is terminated when the current reaches a minimum level. An internal charge timer provides a safety backup. The bq24600 automatically restarts the charge cycle if the battery voltage falls below an internal threshold, and enters a low-quiescent-current sleep mode when the input voltage falls below the battery voltage.

Device Information(1)

PART NUMBER	PACKAGE	BODY SIZE (NOM)
bq24600	VQFN (16)	3.50 mm x 3.50 mm

(1) For all available packages, see the orderable addendum at the end of the datasheet.

Simplified Schematic

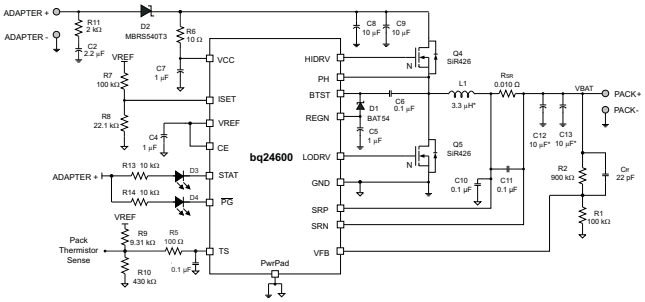

An IMPORTANT NOTICE at the end of this data sheet addresses availability, warranty, changes, use in safety-critical applications, intellectual property matters and other important disclaimers. PRODUCTION DATA.

Table of Contents

1 Features ... 1
2 Applications ... 1
3 Description ... 1
4 Revision History ... 2
5 Pin Configuration and Functions ... 3
6 Specifications ... 4
6.1 Absolute Maximum Ratings ... 4
6.2 Handling Ratings ... 4
6.3 Recommended Operating Conditions ... 4
6.4 Thermal Information ... 5
6.5 Electrical Characteristics ... 5
6.6 Timing Requirements ... 8
6.7 Typical Characteristics ... 9
7 Detailed Description ... 10
7.1 Overview ... 10
7.2 Functional Block Diagram ... 10
7.3 Feature Description ... 11
7.4 Device Functional Modes ... 19
8 Application and Implementation ... 21
8.1 Application Information ... 21
8.2 Typical Application ... 21
9 Power Supply Recommendations ... 26
10 Layout ... 27
10.1 Layout Guidelines ... 27
10.2 Layout Example ... 28
11 Device and Documentation Support ... 29
11.1 Trademarks ... 29
11.2 Third-Party Products Disclaimer ... 29
11.3 Electrostatic Discharge Caution ... 29
11.4 Glossary ... 29
12 Mechanical, Packaging, and Orderable Information ... 29

4 Revision History

NOTE: Page numbers for previous revisions may differ from page numbers in the current version.

Changes from Revision A (October 2011) to Revision B	Page
• Changed Added Handling Rating table, Feature Description section, Device Functional Modes, Application and Implementation section, Power Supply Recommendations section, Device and Documentation	1
• Changed feature text From: "Supports 1-6 Battery Cells" To: "Supports 1S-6S Battery Cells"	1
• Changed the Application list	1
• Deleted the Table of Graphs from the Typical Characteristics section	9
• Changed the Description of D3, D4 in Table 4 From: "LED diode, green, 2.1 V, 10 mΩ, Vishay-Dale, WSL2010R0100F" To:"LED diode, green, 2.1 V, 20 mA, LTST-C190GKT"	22

Changes from Original (February 2010) to Revision A	Page
• Changed descriptions of PH and BTST pins in Pin Description table	3
• Changed V_{HTF} to V_{TCO} in two places in Equation 5	14
• Changed Equation 15	23

Copyright © 2010–2014, Texas Instruments Incorporated

5 Pin Configuration and Functions

RVA Package
(Top View)

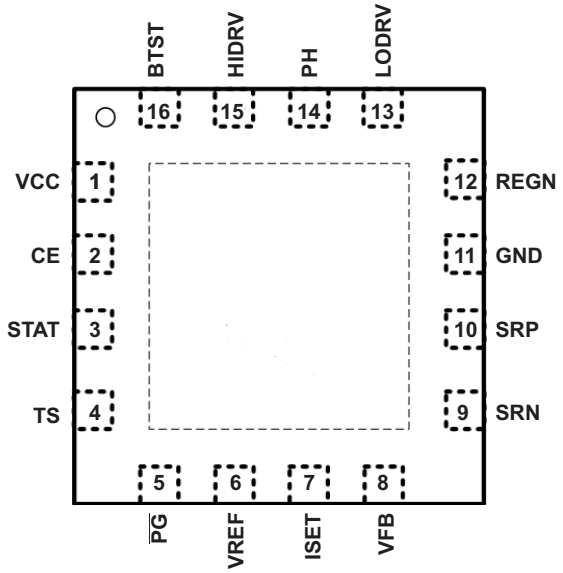

Pin Functions

PIN		I/O	FUNCTION DESCRIPTION
NAME	NO.		
VCC	1	I	IC power positive supply. Connect, through a 10-Ω resistor to the common-source (diode-OR) point: source of high-side P-channel MOSFET and source of reverse-blocking power P-channel MOSFET. Or connect through a 10-Ω resistor to the cathode of the input diode. Place a 1-μF ceramic capacitor from VCC to the GND pin close to the IC.
CE	2	I	Charge-enable active-HIGH logic input. HI enables charge. LO disables charge. It has an internal 1MΩ pull-down resistor.
STAT	3	I	Open-drain charge status pin to indicate various charger operation (See Table 2)
TS	4	I	Temperature qualification voltage input for battery pack negative temperature coefficient thermistor. Program the hot and cold temperature window with a resistor divider from VREF to TS to GND.
$\overline{PG}$	5	O	Open-drain power-good status output. The transistor turns on when a valid VCC is detected. It is turned off in the sleep mode. $\overline{PG}$ can be used to drive an LED or communicate with a host processor. It can be used to drive ACFET and BATFET.
VREF	6	O	3.3-V regulated voltage output. Place a 1-μF ceramic capacitor from VREF to the GND pin close to the IC. This voltage could be used for programming of voltage and current regulation and for programming the TS threshold.
ISET	7	I	Charge current set input. The voltage of ISET pin programs the charge current regulation, pre-charge current and termination current set-point.
VFB	8	O	Output voltage analog feedback adjustment. Connect the output of a resistive voltage divider from the battery terminals to this node to adjust the output battery regulation voltage.
SRN	9	I	Charge-current sense resistor, negative input. A 0.1-μF ceramic capacitor is placed from SRN to SRP to provide differential-mode filtering. An optional 0.1-μF ceramic capacitor is placed from SRN pin to GND for common-mode filtering.
SRP	10	I	Charge-current sense resistor, positive input. A 0.1-μF ceramic capacitor is placed from SRN to SRP to provide differential-mode filtering. A 0.1-μF ceramic capacitor is placed from SRP pin to GND for common-mode filtering.
GND	11	--	Low-current sensitive analog/digital ground. On PCB layout, connect with thermal pad underneath the IC.
REGN	12	O	PWM low-side driver positive 6-V supply output. Connect a 1-μF ceramic capacitor from REGN to the PGND pin, close to the IC. Use for low-side driver and high-side driver bootstrap voltage by connecting a small-signal Schottky diode from REGN to BTST.
LODRV	13	O	PWM low-side driver output. Connect to the gate of the low-side power MOSFET with a short trace.
PH	14	I	PWM high-side driver negative supply. Connect to the phase-switching node (junction of the low-side power MOSFET drain, high-side power MOSFET source, and output inductor).
HIDRV	15	O	PWM high-side driver output. Connect to the gate of the high-side power MOSFET with a short trace.
BTST	16	I	PWM high-side driver negative supply. Connect the 0.1-μF bootstrap capacitor from PH to BTST, and a bootstrap Schottky diode from REGN to BTST.
Thermal pad	--	--	Exposed pad beneath the IC. Always solder thermal pad to the board, and have vias on the thermal pad plane star-connecting to GND and ground plane for high-current power converter. It also serves as a thermal pad to dissipate the heat.

Copyright © 2010–2014, Texas Instruments Incorporated

6 Specifications

6.1 Absolute Maximum Ratings(1) (2) (3)

over operating free-air temperature range (unless otherwise noted)

		MIN	MAX	UNIT
Voltage range	VCC, SRP, SRN, CE, STAT, $\overline{PG}$	–0.3	33	V
	PH	–2	36	V
	VFB	–0.3	16	V
	REGN, LODRV, TS	–0.3	7	V
	BTST, HIDRV with respect to GND	–0.3	39	V
	VREF, ISET	–0.3	3.6	V
Maximum difference voltage	SRP–SRN	–0.5	0.5	V
Junction temperature range, T_J		–40	155	ºC

(1) Stresses beyond those listed under *Absolute Maximum Ratings* may cause permanent damage to the device. These are stress ratings only, and functional operation of the device at these or any other conditions beyond those indicated under *Recommended Operating Conditions* is not implied. Exposure to absolute-maximum-rated conditions for extended periods may affect device reliability.
(2) All voltages are with respect to GND if not specified. Currents are positive into, negative out of the specified terminal. Consult Packaging Section of the data book for thermal limitations and considerations of packages.
(3) Must have a series resistor between battery pack and VFB if battery-pack voltage is expected to be greater than 16 V. Usually the resistor-divider top resistor takes care of this.

6.2 Handling Ratings

			MIN	MAX	UNIT
T_{stg}	Storage temperature range		–55	155	°C
$V_{(ESD)}$	Electrostatic discharge	Human body model (HBM), per ANSI/ESDA/JEDEC JS-001, all pins(1)	–1000	1000	V
		Charged device model (CDM), per JEDEC specification JESD22-C101, all pins(2)	–250	250	

(1) JEDEC document JEP155 states that 500-V HBM allows safe manufacturing with a standard ESD control process.
(2) JEDEC document JEP157 states that 250-V CDM allows safe manufacturing with a standard ESD control process.

6.3 Recommended Operating Conditions

		VALUE	UNIT
Voltage range	VCC, SRP, SRN, CE, STAT, $\overline{PG}$	–0.3 to 28	V
	PH	–2 to 30	V
	VFB	–0.3 to 14	V
	REGN, LODRV, TS	–0.3 to 6.5	V
	BTST, HIDRV with respect to GND	–0.3 to 34	V
	ISET	–0.3 to 3.3	V
	VREF	3.3	V
Maximum difference voltage	SRP–SRN	–0.2 to 0.2	V
Junction temperature range, T_J		0 to 125	ºC

Copyright © 2010–2014, Texas Instruments Incorporated

6.4 Thermal Information

THERMAL METRIC[1]		RVA 16 PINS	UNIT
$R_{\theta JA}$	Junction-to-ambient thermal resistance	43.8	°C/W
$R_{\theta JC(top)}$	Junction-to-case (top) thermal resistance	81	
$R_{\theta JB}$	Junction-to-board thermal resistance	16	
ψ_{JT}	Junction-to-top characterization parameter	0.6	
ψ_{JB}	Junction-to-board characterization parameter	15.77	
$R_{\theta JC(bot)}$	Junction-to-case (bottom) thermal resistance	4	

(1) For more information about traditional and new thermal metrics, see the *IC Package Thermal Metrics* application report, SPRA953.

6.5 Electrical Characteristics

5 V ≤ V_{VCC} ≤ 28 V, 0°C < T_J < 125°C, typical values are at T_A = 25°C, with respect to GND (unless otherwise noted)

PARAMETER		TEST CONDITIONS	MIN	TYP	MAX	UNIT
OPERATING CONDITIONS						
V_{VCC_OP}	VCC input voltage operating range		5		28	V
QUIESCENT CURRENTS						
I_{BAT}	Total battery discharge current (sum of currents into VCC, BTST, PH, SRP, SRN, VFB), VFB ≤ 2.1 V	V_{VCC} < V_{SRN}, V_{VCC} > V_{UVLO} (SLEEP)			15	μA
I_{AC}	Adapter supply current (current into VCC pin)	V_{VCC} > V_{SRN}, V_{VCC} > V_{UVLO} CE = LOW (IC quiescent current)		1	1.5	mA
		V_{VCC} > V_{SRN}, V_{VCC} >V_{VCCLOW}, CE = HIGH, charge done		2	5	
		V_{VCC} > V_{SRN}, V_{VCC} >V_{VCCLOW}, CE = HIGH, Charging, Qg_total = 20 nC, V_{VCC}= 20 V		50		
CHARGE VOLTAGE REGULATION						
V_{FB}	Feedback regulation voltage			2.1		V
	Charge voltage regulation accuracy	T_J = 0°C to 85°C	–0.5%		0.5%	
		T_J = –40°C to 125°C	–0.7%		0.7%	
I_{VFB}	Leakage Current into VFB pin	VFB = 2.1 V			100	nA
CURRENT REGULATION – FAST CHARGE						
V_{ISET}	ISET voltage range				2	V
V_{IREG_CHG}	SRP-SRN current sense voltage range	V_{IREG_CHG} = V_{SRP} – V_{SRN}			100	mV
K_{ISET}	Charge current set factor (amps of charge current per volt on ISET pin)	R_{SENSE} = 10 mΩ		5		A/V
	Charge current regulation accuracy	V_{IREG_CHG} = 40 mV	–3%		3%	
		V_{IREG_CHG} = 20 mV	–4%		4%	
		V_{IREG_CHG} = 5 mV	–25%		25%	
		V_{IREG_CHG} = 1.5 mV (V_{SRN} > 3.1 V)	–40%		40%	
I_{ISET}	Leakage current into ISET pin	V_{ISET} = 2 V			100	nA
CURRENT REGULATION – PRECHARGE						
	Precharge current range	R_{SENSE} = 10 mΩ		I_{CHARGE}/10		A
K_{PRECH}	Precharge current set factor (amps of precharge current per volt on ISET pin)	R_{SENSE} = 10 mΩ		0.5		A/V
	Precharge current regulation accuracy	V_{IREG_PRECH} = 10 mV	–10%		10%	
		V_{IREG_PRECH} = 5 mV	–25%		25%	
		V_{IREG_PRECH} = 1.5 mV (V_{SRN} < 3.1 V)	–55%		55%	

Copyright © 2010–2014, Texas Instruments Incorporated

Electrical Characteristics (continued)

5 V ≤ V_{VCC} ≤ 28 V, 0°C < T_J < 125°C, typical values are at T_A = 25°C, with respect to GND (unless otherwise noted)

PARAMETER		TEST CONDITIONS	MIN	TYP	MAX	UNIT
CHARGE TERMINATION						
	Termination current range	R_{SENSE} = 10 mΩ		I_{CHARGE}/10		A
K_{TERM}	Termination current set factor (amps of termination current per volt on ISET pin)	R_{SENSE} = 10 mΩ		0.5		A/V
	Termination current accuracy	V_{ITERM} = 10 mV	–10%		10%	
		V_{ITERM} = 5 mV	–25%		25%	
		V_{ITERM} = 1.5 mV	–45%		45%	
I_{QUAL}	Termination qualification current	Discharge current once termination is detected		2		mA
INPUT UNDERVOLTAGE LOCKOUT COMPARATOR (UVLO)						
V_{UVLO}	AC undervoltage rising threshold	Measure on VCC	3.65	3.85	4	V
V_{UVLO_HYS}	AC undervoltage hysteresis, falling			350		mV
VCC LOWV COMPARATOR						
	Falling threshold, disable charge	Measure on VCC		4.1		V
	Rising threshold, resume charge			4.35	4.5	V
SLEEP COMPARATOR (REVERSE DISCHARGING PROTECTION)						
V_{SLEEP_FALL}	SLEEP falling threshold	V_{VCC} – V_{SRN} to enter SLEEP	40	100	150	mV
V_{SLEEP_HYS}	SLEEP hysteresis			500		mV
BAT LOWV COMPARATOR						
V_{LOWV}	Precharge to fast-charge transition (LOWV threshold)	Measured on VFB pin	1.534	1.55	1.566	V
V_{LOWV_HYS}	LOWV hysteresis			100		mV
RECHARGE COMPARATOR						
V_{RECHG}	Recharge threshold (with respect to.V_{REG})	Measured on VFB pin	35	50	65	mV
BAT OVER-VOLTAGE COMPARATOR						
V_{OV_RISE}	Overvoltage rising threshold	As percentage of VFB		104%		
V_{OV_FALL}	Overvoltage falling threshold	As percentage of VFB		102%		
INPUT OVER-VOLTAGE COMPARATOR (ACOV)						
V_{ACOV}	AC overvoltage rising threshold on VCC		31.04	32	32.96	V
V_{ACOV_HYS}	AC overvoltage falling hysteresis			1		V
THERMAL SHUTDOWN COMPARATOR						
T_{SHUT}	Thermal shutdown rising temperature	Temperature increasing		145		°C
T_{SHUT_HYS}	Thermal shutdown hysteresis			15		°C
THERMISTOR COMPARATOR						
V_{LTF}	Cold temperature rising threshold	As percentage to V_{VREF}	72.5%	73.5%	74.5%	
V_{LTF_HYS}	Rising hysteresis	As percentage to V_{VREF}	0.2%	0.4%	0.6%	
V_{HTF}	Hot temperature rising threshold	As percentage to V_{VREF}	36.2%	37%	37.8%	
V_{TCO}	Cutoff temperature rising threshold	As percentage to V_{VREF}	33.7%	34.4%	35.1%	
	Deglitch time for temperature out of range detection	V_{TS} > V_{LTF}, or V_{TS} < V_{TCO}, or V_{TS} < V_{HTF}		400		ms
	Deglitch time for temperature in valid range detection	V_{TS} < V_{LTF} – V_{LTF_HYS} or V_{TS} >V_{TCO}, or V_{TS} > V_{HTF}		20		ms
CHARGE OVERCURRENT COMPARATOR (CYCLE-BY-CYCLE)						
V_{OC}	Charge overcurrent falling threshold	Current rising, in non-synchronous mode, mesure on $V_{(SRP-SRN)}$, V_{SRP} < 2 V		45.5		mV
		Current rising, as percentage of $V_{(IREG_CHG)}$, in synchronous mode, V_{SRP} > 2.2 V		160%		
	Charge overcurrent threshold floor	Minimum OCP threshold in synchronous mode, measure on $V_{(SRP-SRN)}$, V_{SRP} > 2.2 V		50		mV
	Charge over-current threshold ceiling	Maximum OCP threshold in synchronous mode, measure on $V_{(SRP-SRN)}$, V_{SRP} > 2.2 V		180		mV
CHARGE UNDERCURRENT COMPARATOR (CYCLE-BY-CYCLE)						
$V_{ISYNSET}$	Charge under-current falling threshold	V_{SRP}>2.2 V, switch from CCM to DCM	1	5	9	mV

Copyright © 2010–2014, Texas Instruments Incorporated

Electrical Characteristics (continued)

5 V ≤ V_{VCC} ≤ 28 V, 0°C < T_J < 125°C, typical values are at T_A = 25°C, with respect to GND (unless otherwise noted)

PARAMETER		TEST CONDITIONS	MIN	TYP	MAX	UNIT
BATTERY SHORTED COMPARATOR (BATSHORT)						
V_{BATSHT}	BAT Short falling threshold, forced non-syn mode	V_{SRP} falling		2		V
V_{BATSHT_HYS}	BAT short rising hysteresis			200		mV
LOW CHARGE CURRENT COMPARATOR						
V_{LC}	Low charge current (average) falling threshold to force into non-sync mode	Measure $V_{(SRP-SRN)}$		1.25		mV
V_{LC_HYS}	Low charge current rising hysteresis			1.25		mV
VREF REGULATOR						
V_{VREF_REG}	VREF regulator voltage	V_{VCC} > V_{UVLO} (0 - 35-mA load)	3.267	3.3	3.333	V
I_{VREF_LIM}	VREF current limit	V_{VREF} = 0 V, V_{VCC} > V_{UVLO}	35			mA
REGN REGULATOR						
V_{REGN_REG}	REGN regulator voltage	V_{VCC} > 10 V, CE = HIGH (0 - 40 mA load)	5.7	6.0	6.3	V
I_{REGN_LIM}	REGN current limit	V_{REGN} = 0 V, V_{VCC} > V_{UVLO}	40			mA
BATTERY DETECTION						
I_{WAKE}	Wake current	R_{SENSE} = 10 mΩ	50	125	200	mA
$I_{DISCHARGE}$	Discharge current			8		mA
I_{FAULT}	Fault current after a timeout fault			2		mA
V_{WAKE}	Wake threshold (relative to V_{REG})	Voltage on VFB to detect battery absent during wake		50		mV
V_{DISCH}	Discharge threshold	Voltage on VFB to detect battery absent during discharge		1.55		V
PWM HIGH SIDE DRIVER (HIDRV)						
$R_{DS_HI_ON}$	High-side driver (HSD) turnon resistance	V_{BTST} – V_{PH} = 5.5 V		3.3	6	Ω
$R_{DS_HI_OFF}$	High-side driver turnoff resistance	V_{BTST} – V_{PH} = 5.5 V		1	1.3	Ω
$V_{BTST_REFRESH}$	Bootstrap refresh comparator threshold voltage	V_{BTST} – V_{PH} when low side refresh pulse is requested	4	4.2		V
PWM LOW SIDE DRIVER (LODRV)						
$R_{DS_LO_ON}$	Low-side driver (LSD) turnon resistance			4.1	7	Ω
$R_{DS_LO_OFF}$	Low-side driver turnoff resistance			1	1.4	Ω
PWM OSCILLATOR						
V_{RAMP_HEIGHT}	PWM ramp height	As percentage of VCC		7%		
	PWM switching frequency(1)		1020	1200	1380	kHz
INTERNAL SOFT START (8 steps to regulation current I_{CHARGE})						
	Soft-start steps			8		step
CHARGER SECTION POWER-UP SEQUENCING						
	Charge-enable delay after power up	Delay from when CE = 1 to when the charger is allowed to turn on		1.5		s
LOGIC IO PIN CHARACTERISTICS (CE, STAT, $\overline{PG}$)						
V_{IN_LO}	CE input low threshold voltage				0.8	V
V_{IN_HI}	CE input high threshold voltage		2.1			
V_{BIAS_CE}	CE input bias current	V = 3.3 V (CE has internal 1MΩ pulldown resistor)			6	µA
V_{OUT_LO}	STAT, $\overline{PG}$ output low saturation voltage	Sink current = 5 mA			0.5	V
I_{OUT_HI}	Leakage current	V = 32 V			1.2	µA

(1) Specified by design.

Copyright © 2010–2014, Texas Instruments Incorporated

6.6 Timing Requirements

			MIN	TYP	MAX	UNIT
CHARGE TERMINATION						
	Deglitch time for termination (both edges)			100		ms
t_{QUAL}	Termination qualification time	$V_{BAT} > V_{RECH}$ and $I_{CHARGE} < I_{TERM}$		250		ms
SLEEP COMPARATOR (REVERSE DISCHARGING PROTECTION)						
	SLEEP rising delay	VCC falling below SRN, delay to pull up $\overline{PG}$		1		µs
	SLEEP falling delay	VCC rising above SRN, delay to pull down $\overline{PG}$		30		ms
	SLEEP rising shutdown deglitch	VCC falling below SRN, delay to enter SLEEP mode		100		ms
	SLEEP falling powerup deglitch	VCC rising above SRN, delay to come out of SLEEP mode		30		ms
BAT LOWV COMPARATOR						
	LOWV rising deglitch	VFB falling below V_{LOWV}			25	ms
	LOWV falling deglitch	VFB rising above $V_{LOWV} + V_{LOWV_HYS}$			25	ms
RECHARGE COMPARATOR						
	Recharge rising deglitch	VFB decreasing below V_{RECHG}		10		ms
	Recharge falling deglitch	VFB increasing above V_{RECHG}		10		ms
INPUT OVER-VOLTAGE COMPARATOR (ACOV)						
V_{ACOV_HYS}	AC overvoltage rising deglitch			1		ms
	AC overvoltage falling deglitch			1		ms
THERMISTOR COMPARATOR						
	Thermal shutdown rising deglitch	Temperature increasing		100		µs
	Thermal shutdown falling deglitch	Temperature decreasing		10		ms
BATTERY SHORTED COMPARATOR (BATSHORT)						
V_{BATSHT_DEG}	Deglitch on both edges			1		µs
LOW CHARGE CURRENT COMPARATOR						
V_{LC_DEG}	Deglitch on both edges			1		µs
SAFETY TIMER						
t_{PRECHG}	Precharge safety timer range (1)	Precharge time before fault occurs	1440	1800	2160	s
t_{CHARGE}	Internal five hour safety timer (1)		4.25	5	5.75	hr
BATTERY DETECTION						
t_{WAKE}	Wake timer	Max time charge is enabled		500		ms
$t_{DISCHARGE}$	Discharge timer	Max time discharge current is applied		1		s
PWM DRIVERS TIMING						
	Driver dead time	Dead time when switching between LSD and HSD, no load at LSD and HSD		30		ns
INTERNAL SOFT START (8 steps to regulation current I_{CHARGE})						
	Soft-start step time			1.6		ms

(1) Specified by design.

Copyright © 2010–2014, Texas Instruments Incorporated

6.7 Typical Characteristics

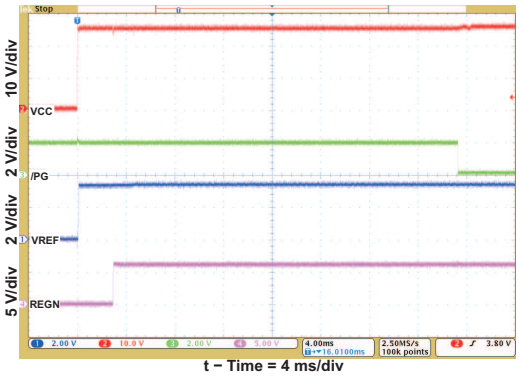

CE = 1

Figure 1. REF REGN and $\overline{PG}$ Power Up

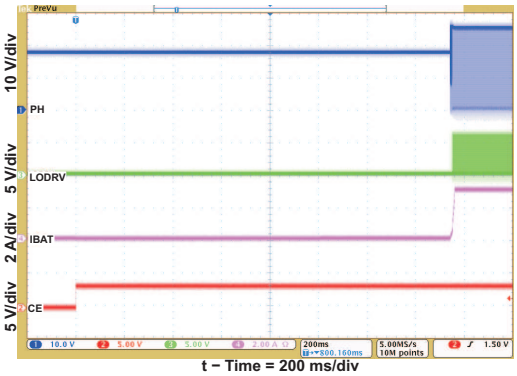

Figure 2. Charge Enable

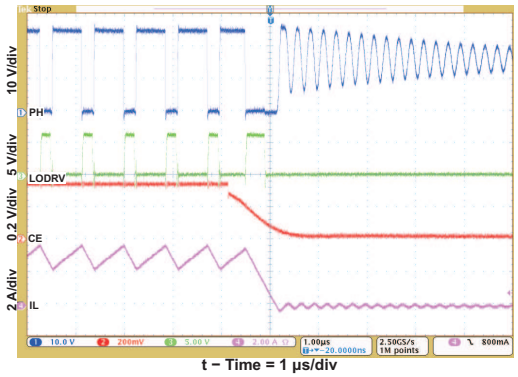

Figure 3. Charge Disable

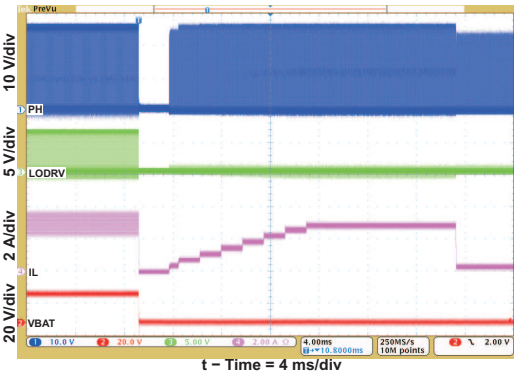

Figure 4. Battery-to-GND Short Protection

7 Detailed Description

7.1 Overview

The bq24600 is a highly integrated Li-ion or Li-polymer switch-mode battery charge controller.

7.2 Functional Block Diagram

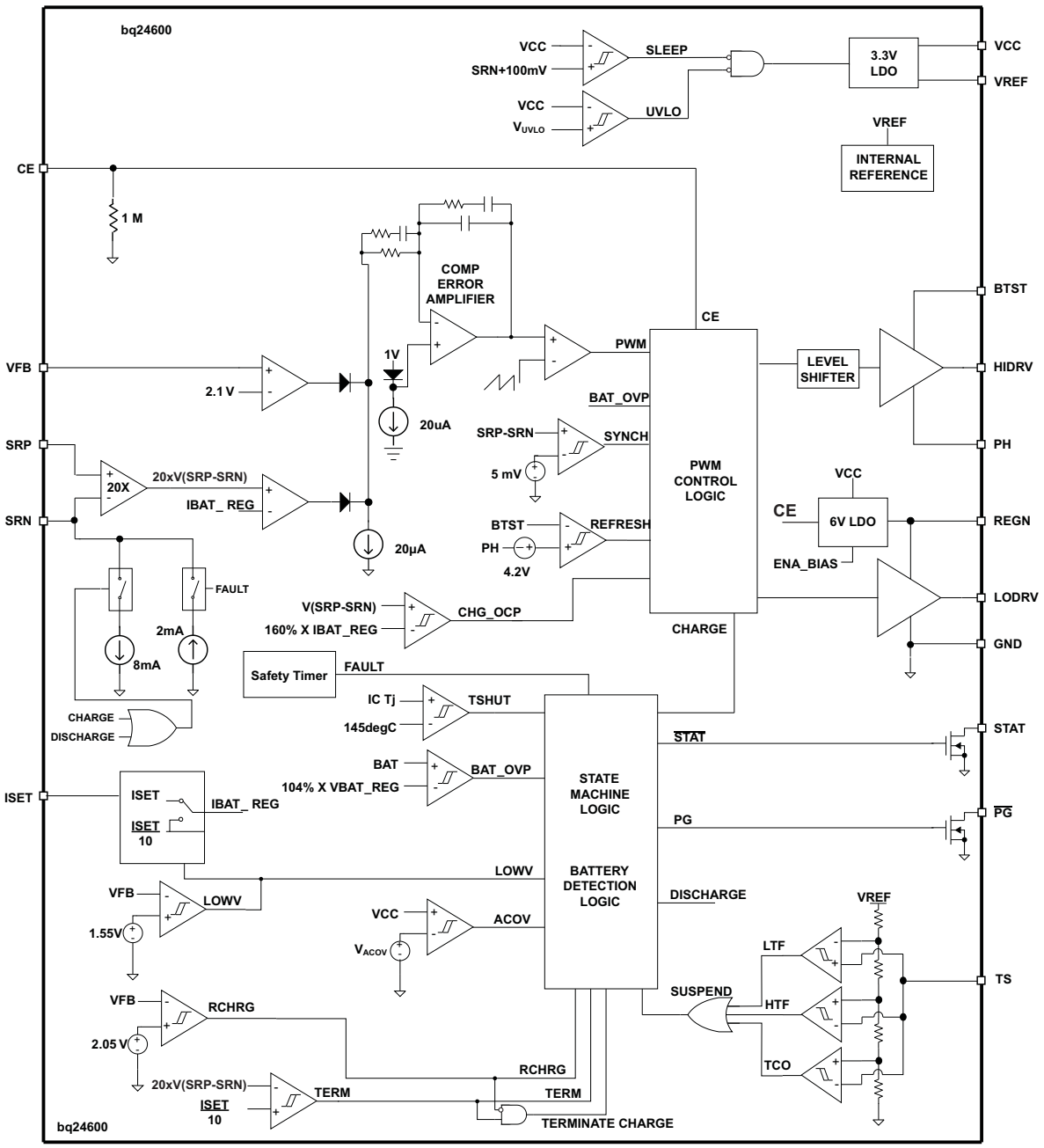

Copyright © 2010–2014, Texas Instruments Incorporated

7.3 Feature Description

7.3.1 Battery Voltage Regulation

The bq24600 uses a high-accuracy voltage band gap and regulator for the high-accuracy charging voltage. The charge voltage is programmed via a resistor divider from the battery to ground, with the midpoint tied to the VFB pin. The voltage at the VFB pin is regulated to 2.1 V, giving the following equation for the regulation voltage:

$$V_{BAT} = 2.1\ V \times \left[1 + \frac{R2}{R1}\right] \tag{1}$$

where R2 is connected from VFB to the battery and R1 is connected from VFB to GND.

7.3.2 Battery Current Regulation

The ISET input sets the maximum charging current. Battery current is sensed by resistor R_{SR} connected between SRP and SRN. The full-scale differential voltage between SRP and SRN is 100 mV. Thus, for a 10-mΩ sense resistor, the maximum charging current is 10 A. The equation for charge current is:

$$I_{CHARGE} = \frac{V_{ISET}}{20 \times R_{SR}} \tag{2}$$

V_{ISET}, The input voltage range of ISET is between 0 and 2 V. The SRP and SRN pins are used to sense voltage across RSR with default value of 10 mΩ. However, resistors of other values can also be used. A larger sense resistor gives a larger sense voltage and a higher regulation accuracy, but at the expense of higher conduction loss.

7.3.3 Precharge

On power up, if the battery voltage is below the V_{LOWV} threshold, the bq24600 applies the precharge current to the battery. This feature is intended to revive deeply discharged cells. If the V_{LOWV} threshold is not reached within 30 minutes of initiating precharge, the charger turns off and a FAULT is indicated on the status pins.

The precharge current is fixed 1/10th of the programmed charge current, which is determined by the voltage on the ISET pin according to Equation 3:

$$I_{PRECHARGE} = \frac{I_{CHARGE}}{10} = \frac{V_{ISET}}{200 \times R_{SR}} \tag{3}$$

The minimum precharge current is clamped to be around 125 mA with default 10-mΩ sensing resistor.

Feature Description (continued)

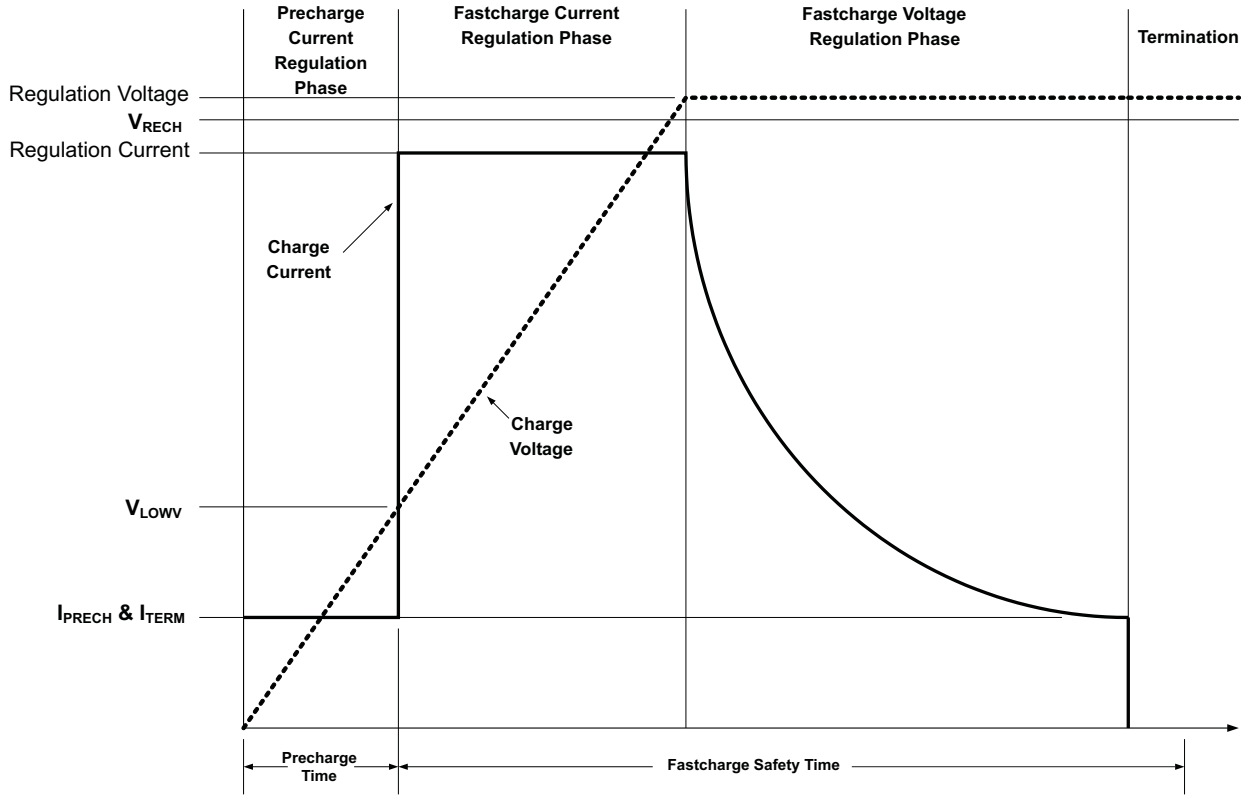

Figure 5. Typical Charging Profile

7.3.4 Charge Termination, Recharge, and Safety Timer

The bq24600 monitors the charging current during the voltage regulation phase. Termination is detected while the voltage on the VFB pin is higher than the V_{RECH} threshold AND the charge current is less than the I_{TERM} threshold, which is fixed at 1/10th of the programmed charge current, as calculated in Equation 4:

$$I_{TERM} = \frac{V_{ISET}}{200 \times R_{SR}} \tag{4}$$

As a safety backup, the bq24600 also provides an internal 5-hour safety timer for fast charge.

A new charge cycle is initiated and safety timer is reset when one of the following conditions occurs:

- The battery voltage falls below the recharge threshold
- A power-on-reset (POR) event occurs
- CE is toggled

7.3.5 Power Up

The bq24600 uses a SLEEP comparator to determine the source of power on the VCC pin, because VCC can be supplied either from the battery or the adapter. If the VCC voltage is greater than the SRN voltage, bq24600 exits the SLEEP mode. If all other conditions are met for charging, bq24600 then attempts to charge the battery (see *Enable and Disable Charging*). If the SRN voltage is greater than VCC, bq24600 enters a low-quiescent-current (<15 µA) SLEEP mode to minimize current drain from the battery.

If VCC is below the UVLO threshold, the device is disabled.

7.3.6 Enable and Disable Charging

The following conditions must be valid before charge is enabled:

Copyright © 2010–2014, Texas Instruments Incorporated

Feature Description (continued)

- CE is HIGH
- The device is not in VCCLOWV mode
- The device is not in SLEEP mode
- The VCC voltage is lower than the ac overvoltage threshold (VCC < V_{ACOV})
- 30-ms delay is complete after initial power up
- The REGN LDO and VREF LDO voltages are at the correct levels
- Thermal shut (TSHUT) is not valid
- TS fault is not detected

One of the following conditions stops on-going charging:

- CE is LOW
- Adapter is removed, causing the device to enter VCCLOWV or SLEEP mode
- Adapter is over voltage
- The REGN or VREF LDOs are overloaded
- TSHUT IC temperature threshold is reached (145°C on rising-edge with 15°C hysteresis)
- TS voltage goes out of range, indicating the battery temperature is too hot or too cold

7.3.7 Automatic Internal Soft-Start Charger Current

The charger automatically soft-starts the charger regulation current every time the charger goes into fast-charge to ensure there is no overshoot or stress on the output capacitors or the power converter. The soft-start consists of stepping up the charge regulation current in eight evenly divided steps up to the programmed charge current. Each step lasts around 1.6 ms, for a typical rise time of 12.8 ms. No external components are needed for this function.

7.3.8 Cycle-by-Cycle Charge Undercurrent Protection

If the SRP-SRN voltage decreases below 5 mV (the charger is also forced into non-synchronous mode when the average SRP-SRN voltage is lower than 1.25 mV), the low side FET is turned off for the remainder of the switching cycle to prevent negative inductor current. During DCM, the low-side FET only turns on for around 80 ns when the bootstrap capacitor voltage drops below 4.2 V to provide refresh charge for the bootstrap capacitor. This is important to prevent negative inductor current from causing a boost effect in which the input voltage increases as power is transferred from the battery to the input capacitors and leads to an overvoltage stress on the VCC node, potentially causing damage to the system.

7.3.9 Input Overvoltage Protection (ACOV)

ACOV provides protection to prevent system damage due to high input voltage. Once the adapter voltage reaches the ACOV threshold, charge is disabled and the system is switched to battery instead of adapter.

7.3.10 Input Undervoltage Lock-Out (UVLO)

The system must have a minimum VCC voltage to allow proper operation. This VCC voltage could come from either input adapter or battery, if a conduction path exists from the battery to VCC through the high-side NMOS body diode. When VCC is below the UVLO threshold, all circuits in the IC are disabled.

7.3.11 Battery Overvoltage Protection

The converter does not allow the high-side FET to turn on until the BAT voltage goes below 102% of the regulation voltage. This allows one-cycle response to an overvoltage condition, such as occurs when the load is removed or the battery is disconnected. An 8-mA current sink from SRP/SRN to GND is on only during charge and allows discharging the stored output-inductor energy that is transferred to the output capacitors.

7.3.12 Cycle-by-Cycle Charge Overcurrent Protection

The charger has secondary cycle-to-cycle overcurrent protection. It monitors the charge current and prevents the current from exceeding 160% of the programmed charge current. The high-side gate drive turns off when the overcurrent is detected, and automatically resumes when the current falls below the overcurrent threshold.

Copyright © 2010–2014, Texas Instruments Incorporated

Feature Description (continued)

7.3.13 Thermal Shutdown Protection

The QFN package has low thermal impedance, which provides good thermal conduction from the silicon to the ambient, to keep junctions temperatures low. As an added level of protection, the charger converter turns off and self-protects whenever the junction temperature exceeds the TSHUT threshold of 145°C. The charger stays off until the junction temperature falls below 130°C, then the charger soft-starts again if all other enable charge conditions are valid. Thermal shutdown also suspends the safety timer.

7.3.14 Temperature Qualification

The controller continuously monitors battery temperature by measuring the voltage between the TS pin and GND. A negative temperature-coefficient thermistor (NTC) and an external voltage divider typically develop this voltage. The controller compares this voltage against its internal thresholds to determine if charging is allowed. To initiate a charge cycle, the battery temperature must be within the V_{LTF} to V_{HTF} thresholds. If battery temperature is outside of this range, the controller suspends charge and the safety timer and waits until the battery temperature is within the V_{LTF} to V_{HTF} range. During the charge cycle, the battery temperature must be within the V_{LTF} to V_{TCO} thresholds. If battery temperature is outside of this range, the controller suspends charge and the safety timer and waits until the battery temperature is within the V_{LTF} to V_{HTF} range. The controller suspends charge by turning off the PWM charge FETs. Figure 6 summarizes the operation.

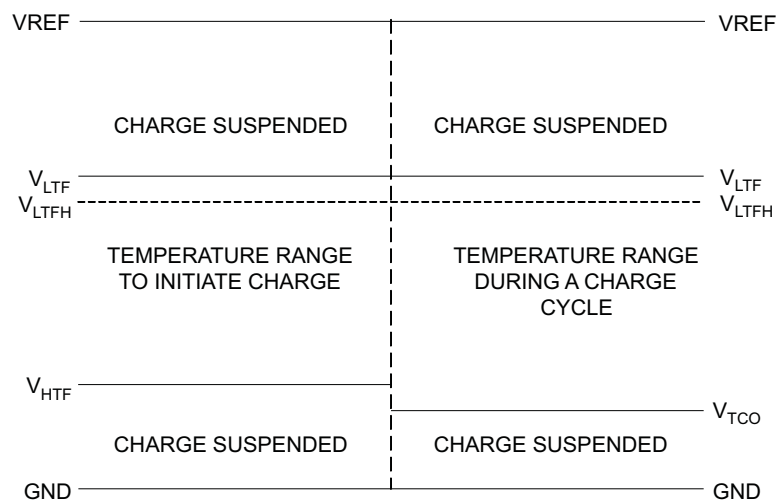

Figure 6. TS Pin, Thermistor Sense Thresholds

Assuming a 103AT NTC thermistor on the battery pack as shown in Figure 11, the value RT1 and RT2 can be determined by using Equation 5 and Equation 6:

$$RT2 = \frac{V_{VREF} \times RTH_{COLD} \times RTH_{HOT} \times \left(\frac{1}{V_{LTF}} - \frac{1}{V_{TCO}}\right)}{RTH_{HOT} \times \left(\frac{V_{VREF}}{V_{TCO}} - 1\right) - RTH_{COLD} \times \left(\frac{V_{VREF}}{V_{LTF}} - 1\right)} \tag{5}$$

$$RT1 = \frac{\frac{V_{VREF}}{V_{LTF}} - 1}{\frac{1}{RT2} + \frac{1}{RTH_{COLD}}} \tag{6}$$

For example, a 103AT NTC thermestor is used to monitor the battery pack temperature. Select T_{COLD} = 0ºC and T_{CUT_OFF} = 45ºC. Then we get R_{T2} = 430 kΩ, R_{T1} = 9.311 Ω. A small RC filter is suggested to use for system-level ESD protection.

Copyright © 2010–2014, Texas Instruments Incorporated

Feature Description (continued)

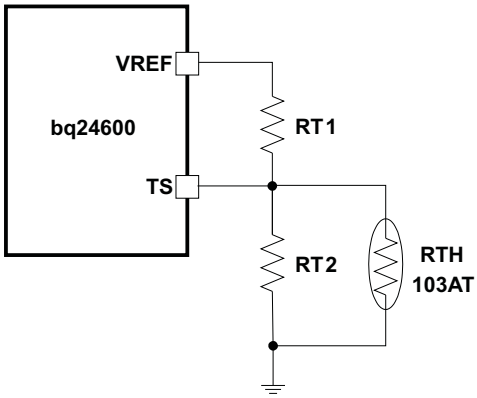

Figure 7. TS Resistor Network

7.3.15 Timer Fault Recovery

The bq24600 provides a recovery method to deal with timer fault conditions. The following summarizes this method:

- **Condition 1:** The battery voltage is above the recharge threshold and a timeout fault occurs.
- **Recovery Method:** The timer fault clears when the battery voltage falls below the recharge threshold, and battery detection begins. Taking CE low or a POR condition also clears the fault.
- **Condition 2:** The battery voltage is below the recharge threshold and a timeout fault occurs.
- **Recovery Method:** Under this scenario, the bq24600 applies the I_{FAULT} current to the battery. This small current is used to detect a battery removal condition and remains on as long as the battery voltage stays below the recharge threshold. If the battery voltage goes above the recharge threshold, the bq24600 disables the fault current and executes the recovery method described in Condition 1. Taking CE low or a POR condition also clears the fault.

7.3.16 $\overline{PG}$ Output

The open-drain $\overline{PG}$ (power-good) output indicates whether the VCC voltage is valid or not. The open-drain FET turns on whenever bq24600 has a valid VCC input (not in UVLO or ACOV or SLEEP mode). The $\overline{PG}$ pin can be used to drive an LED or communicate to the host processor. It can also be used to drive ACFET and BATFET.

7.3.17 CE (Charge Enable)

The CE digital input is used to disable or enable the charge process. A high-level signal on this pin enables charge, provided all the other conditions for charge are met (see *Enabling and Disabling Charge*). A high-to-low transition on this pin also resets all timers and fault conditions. There is an internal 1-MΩ pulldown resistor on the CE pin, so if CE is floated the charge does not turn on.

7.3.18 Inductor, Capacitor, and Sense Resistor Selection Guidelines

The bq24600 provides internal loop compensation. With this scheme, best stability occurs when the LC resonant frequency, f_o, is approximately 17 kHz–25 kHz for the bq24600, per Equation 7:

$$f_o = \frac{1}{2\pi\sqrt{L_o C_o}} \tag{7}$$

Feature Description (continued)

Table 1 provides a summary of typical LC components for various charge currents.

Table 1. Typical Inductor, Capacitor, and Sense Resistor Values as a Function of Charge Current

Charge Current	2 A	4 A	6 A	8 A	10 A
Output inductor L_O	3.3 µH	3.3 µH	2.2 µH	1.5 µH	1.5 µH
Output capacitor C_O	20 µF	20 µF	30 µF	40 µF	40 µF
Sense resistor	10 mΩ	10 mΩ	10 mΩ	10 mΩ	10 mΩ

7.3.19 Charge Status Outputs

The open-drain STAT outputs indicate various charger operations as shown in Table 2. These status pins can be used to drive LEDs or communicate with the host processor. Note that OFF indicates that the open-drain transistor is turned off.

Table 2. STAT Pin Definition for bq24600

CHARGE STATE	STAT
Charge in progress	ON
Charge complete ($\overline{PG}$ = LOW)	OFF
Sleep mode ($\overline{PG}$ = HIGH)	OFF
Charge suspend, timer fault, input overvoltage, battery absent	BLINK (0.5 Hz)

Copyright © 2010–2014, Texas Instruments Incorporated

7.3.20 Battery Detection

For applications with removable battery packs, bq24600 provides a battery-absent detection scheme to reliably detect insertion or removal of battery packs. CE must be HIGH to enable the battery-detection function.

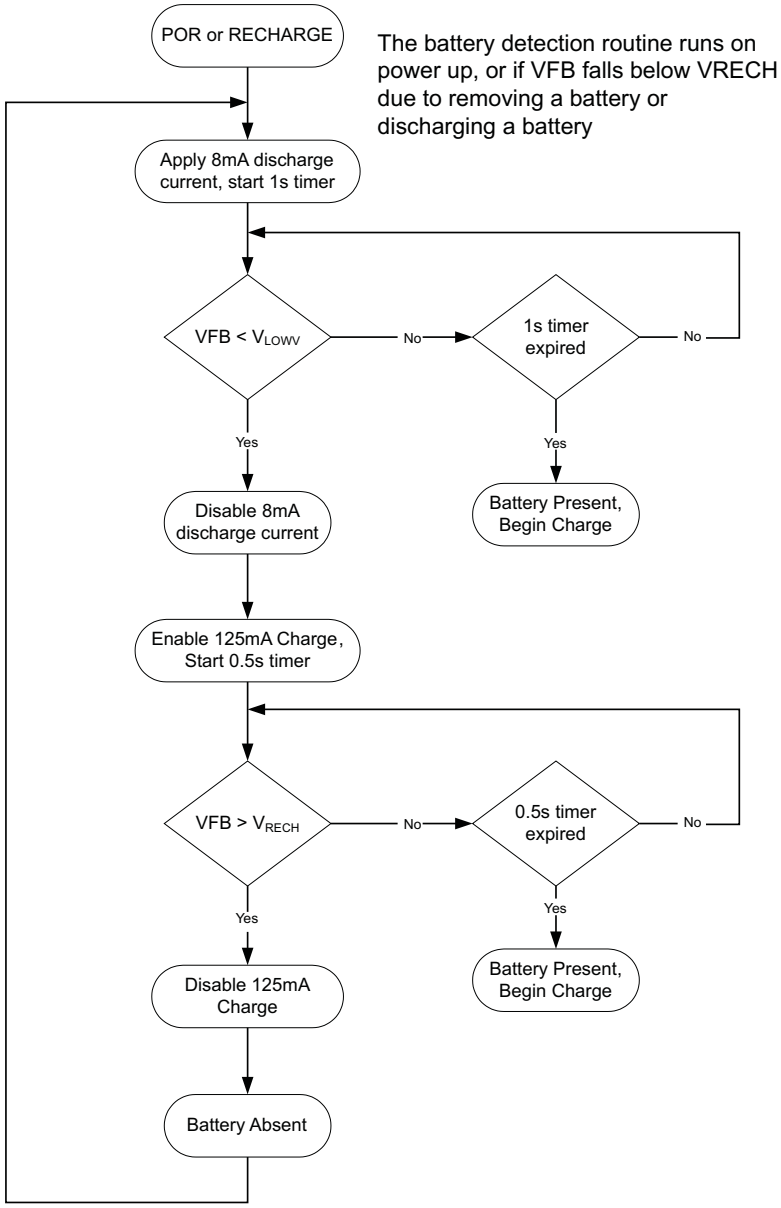

Figure 8. Battery Detection Flowchart

Once the device has powered up, an 8-mA discharge current is applied to the SRN terminal. If the battery voltage falls below the LOWV threshold within 1 second, the discharge source is turned off, and the charger is turned on at low charge current (125 mA). If the battery voltage rises above the recharge threshold within 500 ms, no battery is present and the cycle restarts. If either the 500-ms or 1-second timer times out before the respective thresholds are hit, a battery is detected and a charge cycle is initiated.

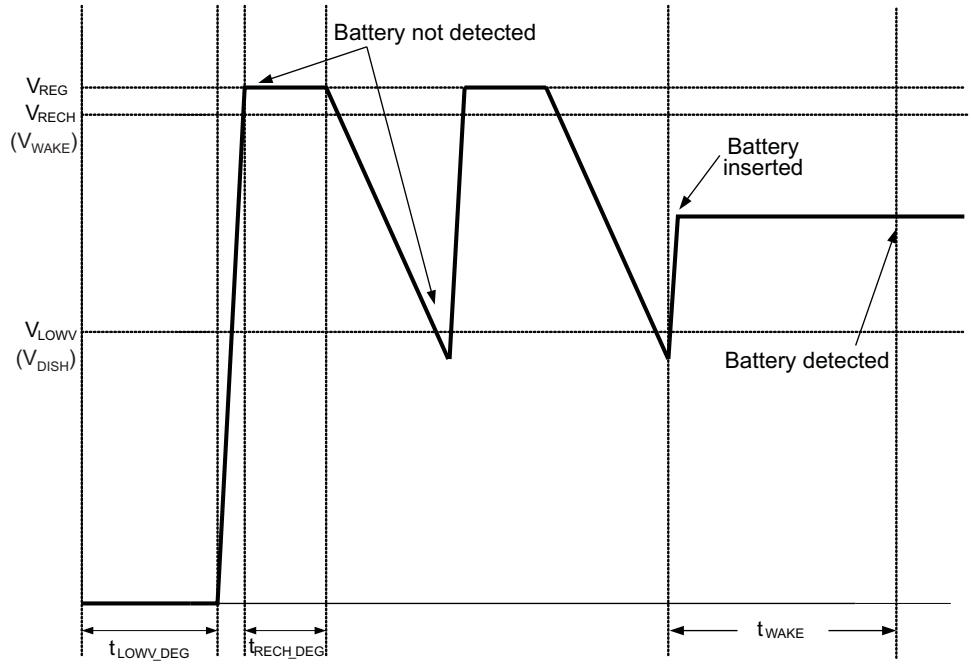

Figure 9. Battery-Detect Timing Diagram

Care must be taken that the total output capacitance at the battery node is not so large that the discharge current source cannot pull the voltage below the LOWV threshold during the 1-second discharge time. The maximum output capacitance can be calculated as shown in Equation 8.

$$C_{MAX} = \frac{I_{DISCH} \times t_{DISCH}}{0.5 \times \left[1 + \frac{R_2}{R_1}\right]} \tag{8}$$

Where C_{MAX} is the maximum output capacitance, I_{DISCH} is the discharge current, t_{DISCH} is the discharge time, and R_2 and R_1 are the voltage feedback resistors from the battery to the VFB pin. The 0.5 factor is the difference between the RECHARGE and the LOWV thresholds at the VFB pin.

7.3.20.1 Example

For a 3-cell Li+ charger with R2 = 500 kΩ, R1 = 100kΩ (giving 12.6 V for voltage regulation), I_{DISCH} = 8 mA, t_{DISCH} = 1 second,

$$C_{MAX} = \frac{8mA \times 1sec}{0.5 \times \left[1 + \frac{500\ k\Omega}{100\ k\Omega}\right]} = 2.7mF \tag{9}$$

Based on these calculations, no more than 2.7 mF should be allowed on the battery node for proper operation of the battery-detection circuit.

Copyright © 2010–2014, Texas Instruments Incorporated

7.4 Device Functional Modes

7.4.1 Converter Operation

The synchronous buck PWM converter uses a fixed-frequency voltage mode with a feed-forward control scheme. A type-III compensation network allows using ceramic capacitors at the output of the converter. The compensation input stage is connected internally between the feedback output (FBO) and the error amplifier input (EAI). The feedback compensation stage is connected between the error amplifier input (EAI) and error amplifier output (EAO). The LC output filter is selected to give a resonant frequency of 17 kHz–25 kHz for the bq24600, where the resonant frequency, f_o, is given by Equation 10:

$$f_o = \frac{1}{2\pi\sqrt{L_o C_o}} \tag{10}$$

An internal sawtooth ramp is compared to the internal EAO error control signal to vary the duty-cycle of the converter. The ramp height is 7% of the input adapter voltage, making it always directly proportional to the input adapter voltage. This cancels out any loop gain variation due to a change in input voltage, and simplifies the loop compensation. The ramp is offset by 300 mV in order to allow zero-percent duty cycle when the EAO signal is below the ramp. The EAO signal is also allowed to exceed the sawtooth ramp signal in order to get a 100% duty-cycle PWM request. Internal gate-drive logic allows achieving 99.5% duty cycle while ensuring the N-channel upper device always has enough voltage to stay fully on. If the BTST pin to PH pin voltage falls below 4.2 V for more than 3 cycles, then the high-side n-channel power MOSFET is turned off and the low-side n-channel power MOSFET is turned on to pull the PH node down and recharge the BTST capacitor. Then the high-side driver returns to 100% duty-cycle operation until the (BTST–PH) voltage is detected to fall low again due to leakage current discharging the BTST capacitor below 4.2 V, and the reset pulse is reissued.

The fixed-frequency oscillator keeps tight control of the switching frequency under all conditions of input voltage, battery voltage, charge current, and temperature, simplifying output filter design and keeping it out of the audible noise region.

7.4.2 Synchronous and Non-Synchronous Operation

The charger operates in synchronous mode when the SRP-SRN voltage is above 5 mV (0.5-A inductor current for a 10-mΩ sense resistor). During synchronous mode, the internal gate-drive logic ensures there is break-before-make complementary switching to prevent shoot-through currents. During the 30-ns dead time where both FETs are off, the body-diode of the low-side power MOSFET conducts the inductor current. Having the low-side FET turn on keeps the power dissipation low, and allows safely charging at high currents. During synchronous mode, the inductor current is always flowing and the converter operates in continuous-conduction mode (CCM), creating a fixed two-pole system.

The charger operates in non-synchronous mode when the SRP-SRN voltage is below 5 mV (0.5-A inductor current for a 10-mΩ sense resistor). The charger is forced into non-synchronous mode when battery voltage is lower than 2 V or when the average SRP-SRN voltage is lower than 1.25 mV.

During non-synchronous operation, the body diode of the low-side MOSFET can conduct the positive inductor current after the high-side n-channel power MOSFET turns off. When the load current decreases and the inductor current drops to zero, the body diode is naturally turned off and the inductor current becomes discontinuous. This mode is called discontinuous-conduction mode (DCM). During DCM, the low-side n-channel power MOSFET turns on for around 80 ns when the bootstrap capacitor voltage drops below 4.2 V; then the low-side power MOSFET turns off and stays off until the beginning of the next cycle, where the high-side power MOSFET is turned on again. The 80-ns low-side MOSFET on-time is required to ensure the bootstrap capacitor is always recharged and able to keep the high-side power MOSFET on during the next cycle. This is important for battery chargers, where unlike regular dc-dc converters, there is a battery load that maintains a voltage and can both source and sink current. The 80-ns low-side pulse pulls the PH node (connection between high and low-side MOSFETs) down, allowing the bootstrap capacitor to recharge up to the REGN LDO value. After the 80 ns, the low-side MOSFET is kept off to prevent negative inductor current from occurring.

At very low currents during non-synchronous operation, there may be a small amount of negative inductor current during the 80-ns recharge pulse. The charge should be low enough to be absorbed by the input capacitance. Whenever the converter goes into zero-percent duty cycle, the high-side MOSFET does not turn on, and the low-side MOSFET does not turn on (only 80-ns recharge pulse) either, and there is almost no discharge from the battery.

Copyright © 2010–2014, Texas Instruments Incorporated

Device Functional Modes (continued)

During the DCM mode, the loop response automatically changes and has a single-pole system at which the pole is proportional to the load current, because the converter does not sink current, and only the load provides a current sink. This means at very low currents the loop response is slower, as there is less sinking current available to discharge the output voltage.

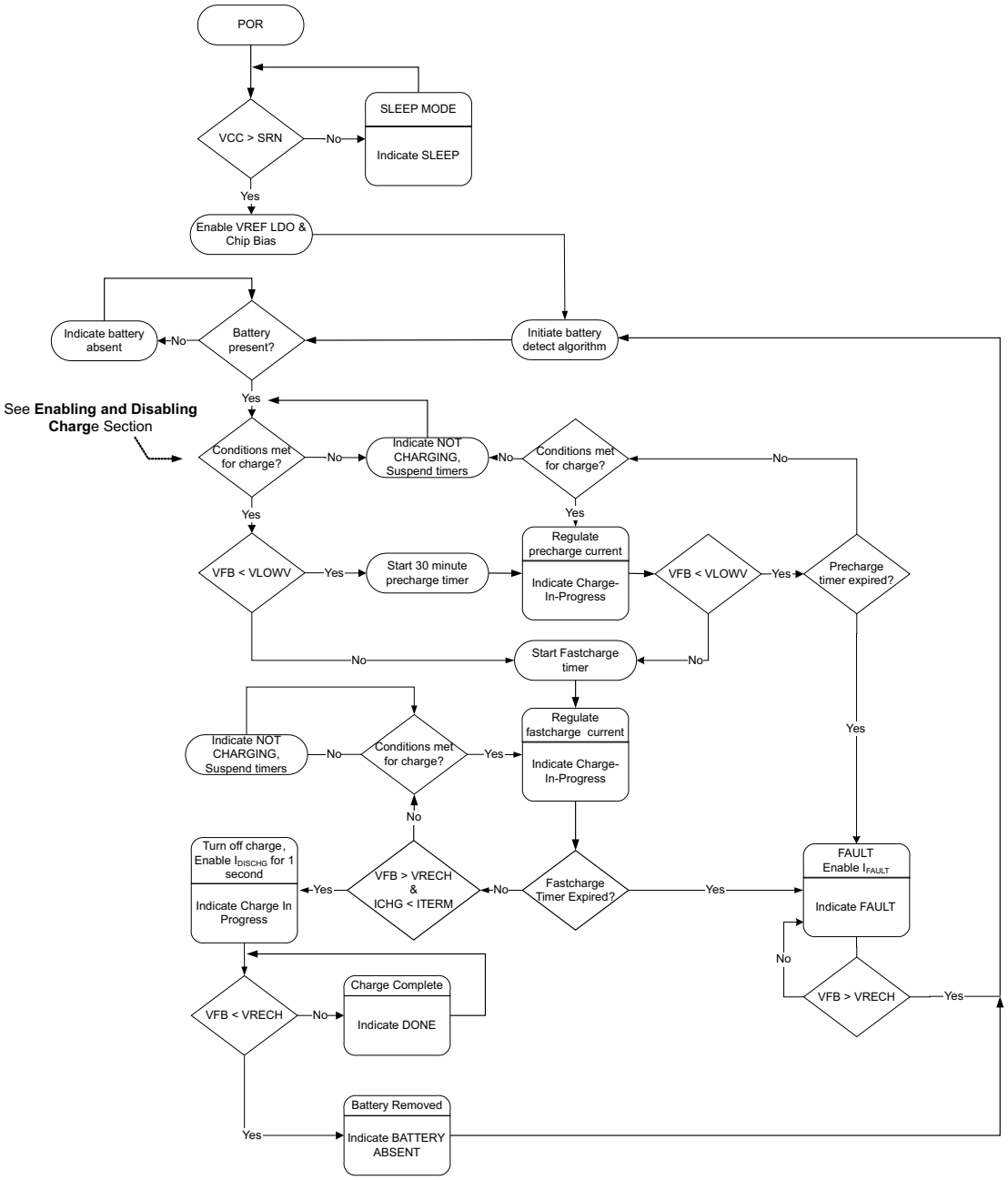

Figure 10. Operational Flowchart for bq24600

Copyright © 2010–2014, Texas Instruments Incorporated

8 Application and Implementation

NOTE

Information in the following applications sections is not part of the TI component specification, and TI does not warrant its accuracy or completeness. TI's customers are responsible for determining suitability of components for their purposes. Customers should validate and test their design implementation to confirm system functionality.

8.1 Application Information

The evaluation module (EVM) is a complete charger module for evaluating a stand-alone single multi-cell Li-ion charger using the bq241600 device.

8.2 Typical Application

The typical application shown is a 28-V input, 5-cell Li-ion, 3-A charger.

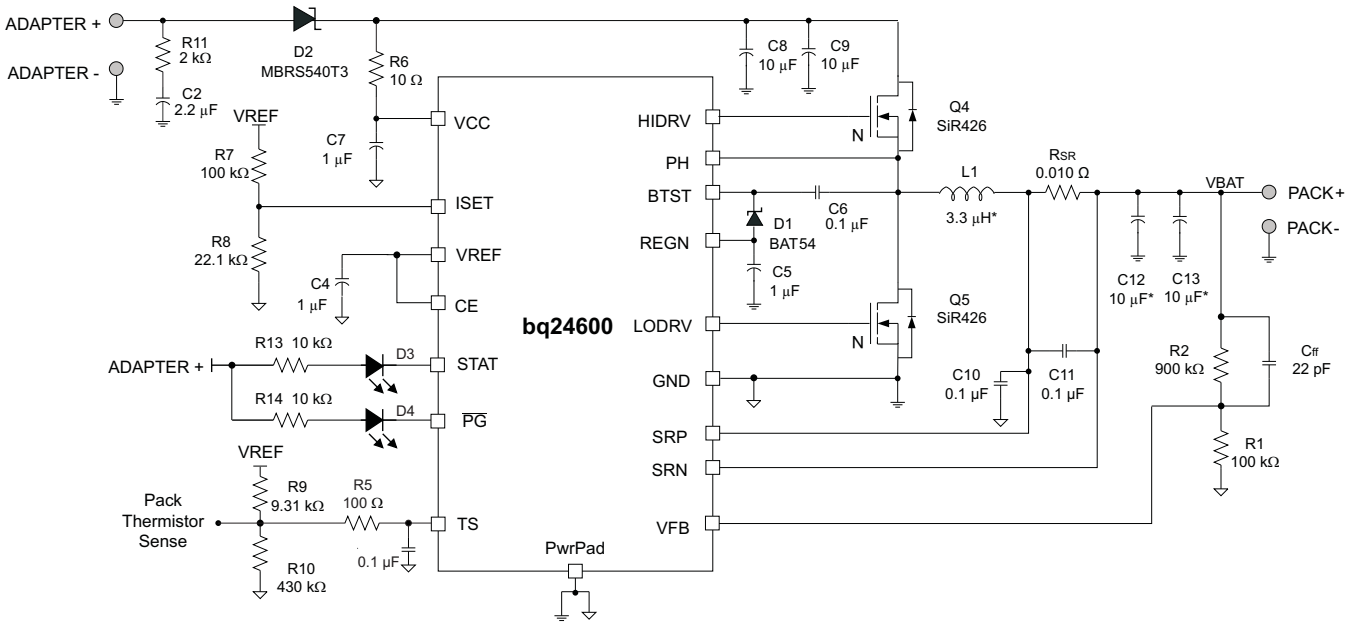

V_{IN} = 28 V, BAT = 5-cell Li-Ion, I_{charge} = 3 A, $I_{pre\text{-}charge}$ = I_{term} = 0.3 A

Figure 11. Typical Application Circuit

8.2.1 Design Requirements

For this design example, use the parameters shown in Table 3.

Table 3. Design Parameters

PARAMETER	VALUE
Input voltage	28 V
Battery Charge Voltage	21 V
Battery Charge Current	3 A

Table 4. Supporting Components for Figure 11

PART DESIGNATOR	QTY	DESCRIPTION
Q4, Q5	2	N-channel MOSFET, 40 V, 30 A, PowerPAK SO-8, Vishay-Siliconix, SiR426DN
D1	1	Diode, dual Schottky, 30 V, 200 mA, SOT23, Fairchild, BAT54C
D2	1	Schottky diode, 40V, 5A, SMC, ON Semiconductor, MBRS540T3
R_{SR}	2	Sense resistor, 10 mΩ, 1%, 1 W, 2010, Vishay-Dale, WSL2010R0100F
L1	1	Inductor, 3.3 µH, 5.5 A, Vishay-Dale, IHLP2525CZ
C8, C9, C12, C13	4	Capacitor, ceramic, 10 µF, 35 V, 10%, X7R
C2	1	Capacitor, ceramic, 2.2µF, 50 V, 10%, X7R
C4, C5	2	Capacitor, ceramic, 1 µF, 16V, 10%, X7R
C7	1	Capacitor, ceramic, 1µF, 50 V, 10%, X7R
C1, C6, C11	4	Capacitor, ceramic, 0.1 µF, 16 V, 10%, X7R
C_{ff}	1	Capacitor, ceramic, 22 pF, 35 V, 10%, X7R
C10	1	Capacitor, ceramic, 0.1 µF, 50V, 10%
R1, R7	2	Resistor, chip, 100 kΩ, 1/16W, 0.5%
R2	1	Resistor, chip, 900 kΩ, 1/16W, 0.5%
R8	1	Resistor, chip, 22.1 kΩ, 1/16W, 0.5%
R9	1	Resistor, chip, 9.31 kΩ, 1/16W, 1%
R10	1	Resistor, chip, 430 kΩ, 1/16W, 1%
R11	1	Resistor, chip, 2Ω, 1W, 5%
R13, R14	2	Resistor, chip, 10 kΩ, 1/16W, 5%
R5	1	Resistor, chip, 100 Ω, 1/16W, 0.5%
R6	1	Resistor, chip, 10 Ω, 1W, 5%
D3, D4	2	LED diode, green, 2.1 V, 20 mA, LTST-C190GKT

Copyright © 2010–2014, Texas Instruments Incorporated

8.2.2 Detailed Design Procedure

8.2.2.1 Inductor Selection

The bq24600 has a 1.2-MHz switching frequency to allow the use of small inductor and capacitor values. Inductor saturation current should be higher than the charging current (I_{CHARGE}) plus half the ripple current (I_{RIPPLE}):

$$I_{SAT} \geq I_{CHG} + (1/2)\, I_{RIPPLE} \tag{11}$$

The inductor ripple current depends on input voltage (V_{IN}), duty cycle ($D = V_{OUT}/V_{IN}$), switching frequency (f_s) and inductance (L):

$$I_{RIPPLE} = \frac{V_{IN} \times D \times (1 - D)}{f_S \times L} \tag{12}$$

The maximum inductor ripple current happens with D = 0.5 or close to 0.5. For example, the battery charging voltage range is from 9 V to 12.6 V for a 3-cell battery pack. For a 20-V adapter voltage, 10-V battery voltage gives the maximum inductor ripple current. Another example is a 4-cell battery, for which the battery voltage range is from 12 V to 16.8 V, and 12-V battery voltage gives the maximum inductor ripple current.

Usually, inductor ripple is designed in the range of 20%–40% of maximum charging current as a trade-off between inductor size and efficiency for a practical design.

The bq24600 has cycle-by-cycle charge undercurrent protection (UCP) by monitoring the charging-current-sensing resistor to prevent negative inductor current. The typical UCP threshold is 5 mV falling edge, corresponding to 0.5-A falling edge for a 10-mΩ charging-current-sensing resistor.

8.2.2.2 Input Capacitor

The input capacitor should have enough ripple-current rating to absorb the input switching-ripple current. The worst-case rms ripple current is half of the charging current when the duty cycle is 0.5. If the converter does not operate at 50% duty cycle, then the worst-case capacitor rms current I_{CIN} occurs where the duty cycle is closest to 50% and can be estimated by the following equation:

$$I_{CIN} = I_{CHG} \times \sqrt{D \times (1 - D)} \tag{13}$$

8.2.2.3 Output Capacitor

A low-ESR ceramic capacitor such as X7R or X5R is preferred for the input decoupling capacitor and should be placed near the drain of the high-side MOSFET and the source of the low-side MOSFET as close as possible. The voltage rating of the capacitor must be higher than the normal input voltage level. A 25-V rating or higher capacitor is preferred for a 20-V input voltage. A 10-µF to 20-µF capacitance is suggested for typical of 3-A to 4-A charging current.

The output capacitor also should have enough ripple-current rating to absorb the output switching ripple current. The output capacitor rms current I_{COUT} is given:

$$I_{COUT} = \frac{I_{RIPPLE}}{2 \times \sqrt{3}} \approx 0.29 \times I_{RIPPLE} \tag{14}$$

The output capacitor voltage ripple can be calculated as follows:

$$\Delta V_o = \frac{1}{8LCf_s^2}\left(V_{BAT} - \frac{V_{BAT}^2}{V_{IN}}\right) \tag{15}$$

At certain input/output voltage and switching frequency, the voltage ripple can be reduced by increasing the output filter LC.

The bq24600 has an internal loop compensator. To get good loop stability, the resonant frequency of the output inductor and output capacitor should be designed between 17 kHz and 25 kHz. The preferred ceramic capacitor for a 4-cell application has a 25-V or higher rating and X7R or X5R dielectric.

Copyright © 2010–2014, Texas Instruments Incorporated

8.2.2.4 Power MOSFET Selection

Two external N-channel MOSFETs are used for a synchronous switching battery charger. The gate drivers are internally integrated into the IC with 6 V of gate drive voltage. 30-V or higher voltage rating MOSFETs are preferred for 20-V input voltage, and 40-V or higher rating MOSFETs are preferred for 20-V to 28-V input voltage.

Figure-of-merit (FOM) is usually used for selecting the proper MOSFET based on a tradeoff between the conduction loss and switching loss. For a top-side MOSFET, FOM is defined as the product of a MOSFET on-resistance, $r_{DS(on)}$, and the gate-to-drain charge, Q_{GD}. For a bottom-side MOSFET, FOM is defined as the product of the MOSFET on-resistance, $r_{DS(on)}$, and the total gate charge, Q_G.

$$FOM_{top} = R_{DS(on)} \times Q_{GD} \qquad FOM_{bottom} = R_{DS(on)} \times Q_G \tag{16}$$

The lower the FOM value, the lower the total power loss. Usually lower $r_{DS(on)}$ has higher cost with the same package size.

The top-side MOSFET loss includes conduction loss and switching loss. It is a function of duty cycle ($D = V_{OUT}/V_{IN}$), charging current (I_{CHARGE}), the MOSFET on-resistance $r_{DS(on)}$), input voltage (V_{IN}), switching frequency (f_S), turnon time (t_{on}) and turnoff time (t_{toff}):

$$P_{top} = D \times I_{CHG}^2 \times R_{DS(on)} + \frac{1}{2} \times V_{IN} \times I_{CHG} \times \left(t_{on} + t_{off}\right) \times f_S \tag{17}$$

The first item represents the conduction loss. Usually, MOSFET $r_{DS(on)}$ increases by 50% with a 100ºC junction-temperature rise. The second term represents the switching loss. The MOSFET turnon and turnoff times are given by:

$$t_{on} = \frac{Q_{SW}}{I_{on}}, \; t_{off} = \frac{Q_{SW}}{I_{off}} \tag{18}$$

where Q_{sw} is the switching charge, I_{on} is the turnon gate-drive current and I_{off} is the turnoff gate-drive current. If the switching charge is not given in the MOSFET data sheet, it can be estimated by gate-to-drain charge (Q_{GD}) and gate-to-source charge (Q_{GS}):

$$Q_{SW} = Q_{GD} + \frac{1}{2} \times Q_{GS} \tag{19}$$

Total gate-drive current can be estimated by REGN voltage (V_{REGN}), MOSFET plateau voltage (V_{plt}), total turn-on gate resistance (Ron) and turn-off gate resistance R_{off}) of the gate driver:

$$I_{on} = \frac{V_{REGN} - V_{plt}}{R_{on}}, \; I_{off} = \frac{V_{plt}}{R_{off}} \tag{20}$$

The conduction loss of the bottom-side MOSFET is calculated with the following equation when it operates in synchronous continuous-conduction mode:

$$P_{bottom} = (1 - D) \times I_{CHG}^2 \times R_{DS(on)} \tag{21}$$

If the SRP-SRN voltage decreases below 5 mV (the charger is also forced into non-synchronous mode when the average SRP-SRN voltage is lower than 1.25 mV), the low side FET is turned off for the remainder of the switching cycle to prevent negative inductor current.

As a result, all the freewheeling current goes through the body diode of the bottom-side MOSFET. The maximum charging current in non-synchronous mode can be up to 0.9 A (0.5 A typ.) for a 10-mΩ charging-current sensing resistor considering IC tolerance. Choose the bottom-side MOSFET with either an internal Schottky or body diode capable of carrying the maximum non-synchronous-mode charging current.

MOSFET gate driver power loss contributes to the dominant losses on the controller IC when the buck converter is switching. Choosing a MOSFET with a small Q_{g_total} largely reduces the IC power loss to avoid thermal shutdown.

$$P_{ICLoss_driver} = V_{IN} \cdot Q_{g_total} \cdot f_s \tag{22}$$

where Q_{g_total} is the total gate charge for both upper and lower MOSFETs at 6-V V_{REGN}.

Copyright © 2010–2014, Texas Instruments Incorporated

8.2.2.5 Input Filter Design

During adapter hot plug-in, the parasitic inductance and input capacitor from the adapter cable form a second-order system. The voltage spike at the VCC pin may be beyond the IC maximum voltage rating and damage IC. The input filter must be carefully designed and tested to prevent an overvoltage event on the VCC pin.

There are several methods for damping or limiting the overvoltage spike during adapter hot plug-in. An electrolytic capacitor with high ESR as an input capacitor can damp the overvoltage spike well below the IC maximum pin voltage rating. A high-current-capability TVS Zener diode can also limit the overvoltage level to an IC-safe level. However these two solutions may not have low cost or small size.

A cost-effective and small-size solution is shown in Figure 12. R1 and C1 comprise a damping RC network to damp the hot plug-in oscillation. As a result, the overvoltage spike is limited to a safe level. D1 is used for reverse voltage protection for the VCC pin (it can be the input Schottky diode or the body diode of input ACFET). C2 is the VCC pin decoupling capacitor and it should be placed as close as possible to the VCC pin. R2 and C2 form a damping RC network to further protect the IC from high dv/dt and high-voltage spikes. The C2 value should be less than the C1 value so R1 can be dominant over the ESR of C1 to get enough damping effect for hot plug-in. The R1 and R2 packages must be sized to handle inrush-current power loss according to resistor manufacturer's datasheet. The filter component values must always be verified with the real application and minor adjustments may be needed to fit in the real application circuit.

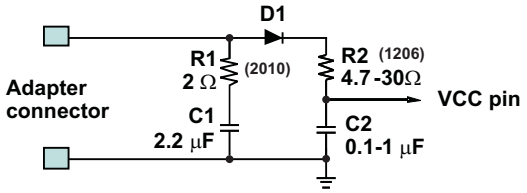

Figure 12. Input Filter

8.2.3 Application Curves

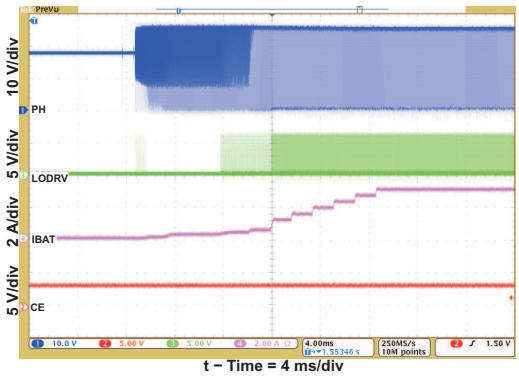

CE = 1

Figure 13. Current Soft-Start

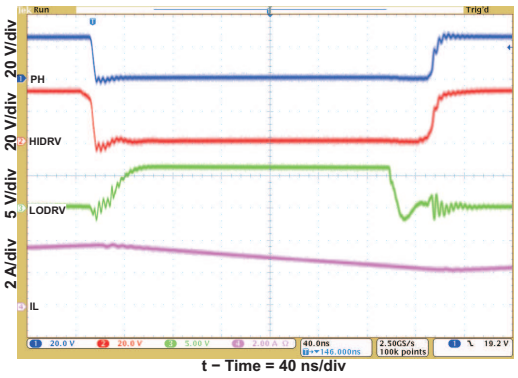

Figure 14. Continuous-Conduction-Mode Switching Waveforms

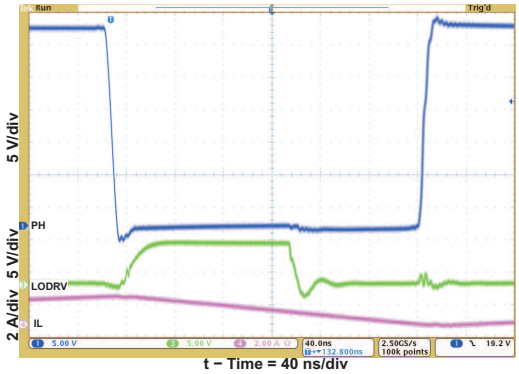

Figure 15. Cycle-by-Cycle Synchronous to Nonsynchronous

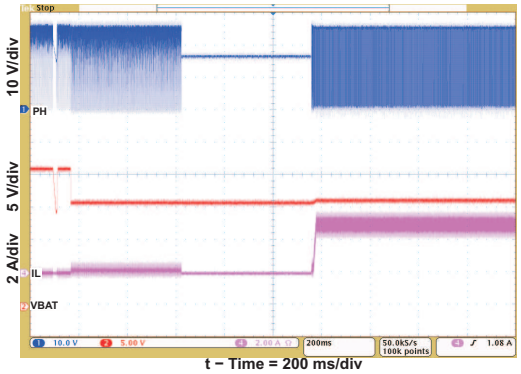

Figure 16. Battery Insertion

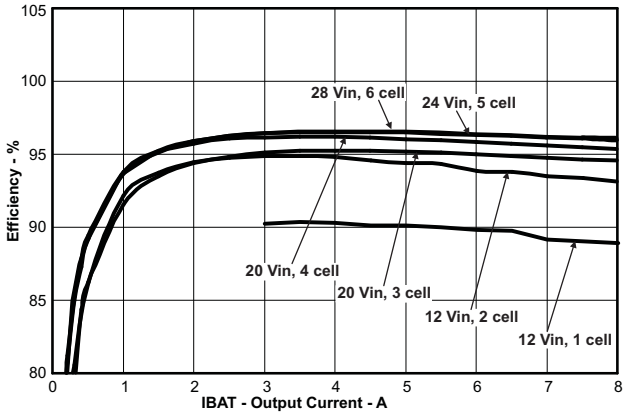

Figure 17. Efficiency vs Output Current

9 Power Supply Recommendations

The bq24600 requires a voltage source between 5 V and 28 V connected to VCC. and VCC can be supplied either from the battery or the adapter. If the VCC voltage is greater than the SRN voltage, bq24600 exits the SLEEP mode. If the SRN voltage is greater than VCC, bq24600 enters a low-quiescent current (< 15 µA) SLEEP mode to minimize current drain from the battery.

Copyright © 2010–2014, Texas Instruments Incorporated

10 Layout

10.1 Layout Guidelines

The switching node rise and fall times should be minimized for minimum switching loss. Proper layout of the components to minimize high-frequency current-path loop (see Figure 19) is important to prevent electrical and magnetic field radiation and high-frequency resonant problems. Here is a PCB priority list for proper layout. Layout of the PCB according to this specific order is essential.

1. Place the input capacitor as close as possible to switching the MOSFET supply and ground connections, and use the shortest possibloe copper trace connection. These parts should be placed on the same layer of PCB instead of on different layers, using vias to make this connection.
2. The IC should be placed close to the switching MOSFET gate terminals to keep the gate-drive signal traces short for a clean MOSFET drive. The IC can be placed on the other side of the PCB from the switching MOSFET.
3. Place the inductor input terminal as close as possible to the switching MOSFET output terminal. Minimize the copper area of this trace to lower electrical and magnetic field radiation but make the trace wide enough to carry the charging current. Do not use multiple layers in parallel for this connection. Minimize parasitic capacitance from this area to any other trace or plane.
4. The charging-current sensing resistor should be placed right next to the inductor output. Route the sense leads connected across the sensing resistor back to the IC in same layer, close to each other (minimize loop area) and do not route the sense leads through a high-current path (see Figure 18 for Kelvin connection for best current accuracy). Place the decoupling capacitor on these traces next to the IC.
5. Place the output capacitor next to the sensing resistor output and ground.
6. Output capacitor ground connections must be tied to the same copper that connects to the input capacitor ground before connecting to system ground.
7. Route the analog ground separately from the power ground and use a single ground connection to tie the charger power ground to the charger analog ground. Just beneath the IC, use copper pour for analog ground, but avoid the power pins to reduce inductive and capacitive noise coupling. Connect the analog ground to GND. Connect the analog ground and power ground together using the thermal pad as the single ground connection point. Or use a 0-Ω resistor to tie the analog ground to power ground (the thermal pad should tie to analog ground in this case). A star connection under the thermal pad is highly recommended.
8. It is critical that the exposed thermal pad on the back side of the IC package be soldered to the PCB ground. Ensure that there are sufficient thermal vias directly under the IC connecting to the ground plane on the other layers.
9. Place decoupling capacitors next to the IC pins, and make trace connections as short as possible.
10. All via sizes and numbers should be enough for a given current path.

See the EVM design (SLUU410) for the recommended component placement with trace and via locations.

For QFN information, see SCBA017 and SLUA271.

10.2 Layout Example

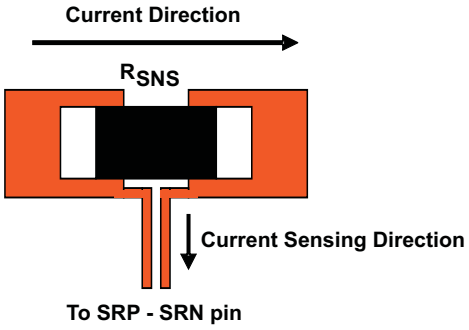

Figure 18. Sensing Resistor PCB Layout

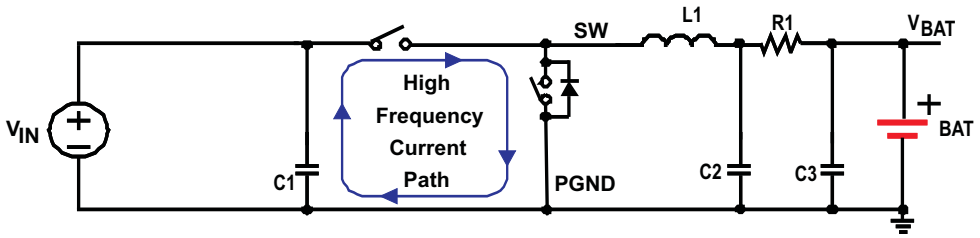

Figure 19. High Frequency Current Path

Copyright © 2010–2014, Texas Instruments Incorporated

11 Device and Documentation Support

11.1 Trademarks

All trademarks are the property of their respective owners.

11.2 Third-Party Products Disclaimer

TI'S PUBLICATION OF INFORMATION REGARDING THIRD-PARTY PRODUCTS OR SERVICES DOES NOT CONSTITUTE AN ENDORSEMENT REGARDING THE SUITABILITY OF SUCH PRODUCTS OR SERVICES OR A WARRANTY, REPRESENTATION OR ENDORSEMENT OF SUCH PRODUCTS OR SERVICES, EITHER ALONE OR IN COMBINATION WITH ANY TI PRODUCT OR SERVICE.

11.3 Electrostatic Discharge Caution

These devices have limited built-in ESD protection. The leads should be shorted together or the device placed in conductive foam during storage or handling to prevent electrostatic damage to the MOS gates.

11.4 Glossary

SLYZ022 — *TI Glossary*.

This glossary lists and explains terms, acronyms, and definitions.

12 Mechanical, Packaging, and Orderable Information

The following pages include mechanical, packaging, and orderable information. This information is the most current data available for the designated devices. This data is subject to change without notice and revision of this document. For browser-based versions of this data sheet, refer to the left-hand navigation.

PACKAGING INFORMATION

Orderable part number	Status (1)	Material type (2)	Package | Pins	Package qty | Carrier	RoHS (3)	Lead finish/ Ball material (4)	MSL rating/ Peak reflow (5)	Op temp (°C)	Part marking (6)
BQ24600RVAR	Active	Production	VQFN (RVA) | 16	3000 | LARGE T&R	Yes	NIPDAU	Level-1-260C-UNLIM	-40 to 85	OAQ
BQ24600RVAR.A	Active	Production	VQFN (RVA) | 16	3000 | LARGE T&R	Yes	NIPDAU	Level-1-260C-UNLIM	-40 to 85	OAQ
BQ24600RVAR.B	Active	Production	VQFN (RVA) | 16	3000 | LARGE T&R	Yes	NIPDAU	Level-1-260C-UNLIM	-40 to 85	OAQ
BQ24600RVAT	Active	Production	VQFN (RVA) | 16	250 | SMALL T&R	Yes	NIPDAU	Level-2-260C-1 YEAR	-40 to 85	OAQ
BQ24600RVAT.A	Active	Production	VQFN (RVA) | 16	250 | SMALL T&R	Yes	NIPDAU	Level-2-260C-1 YEAR	-40 to 85	OAQ
BQ24600RVAT.B	Active	Production	VQFN (RVA) | 16	250 | SMALL T&R	Yes	NIPDAU	Level-2-260C-1 YEAR	-40 to 85	OAQ
BQ24600RVATG4	Active	Production	VQFN (RVA) | 16	250 | SMALL T&R	Yes	NIPDAU	Level-2-260C-1 YEAR	-40 to 85	OAQ
BQ24600RVATG4.A	Active	Production	VQFN (RVA) | 16	250 | SMALL T&R	Yes	NIPDAU	Level-2-260C-1 YEAR	-40 to 85	OAQ
BQ24600RVATG4.B	Active	Production	VQFN (RVA) | 16	250 | SMALL T&R	Yes	NIPDAU	Level-2-260C-1 YEAR	-40 to 85	OAQ

(1) **Status:** For more details on status, see our product life cycle.

(2) **Material type:** When designated, preproduction parts are prototypes/experimental devices, and are not yet approved or released for full production. Testing and final process, including without limitation quality assurance, reliability performance testing, and/or process qualification, may not yet be complete, and this item is subject to further changes or possible discontinuation. If available for ordering, purchases will be subject to an additional waiver at checkout, and are intended for early internal evaluation purposes only. These items are sold without warranties of any kind.

(3) **RoHS values:** Yes, No, RoHS Exempt. See the TI RoHS Statement for additional information and value definition.

(4) **Lead finish/Ball material:** Parts may have multiple material finish options. Finish options are separated by a vertical ruled line. Lead finish/Ball material values may wrap to two lines if the finish value exceeds the maximum column width.

(5) **MSL rating/Peak reflow:** The moisture sensitivity level ratings and peak solder (reflow) temperatures. In the event that a part has multiple moisture sensitivity ratings, only the lowest level per JEDEC standards is shown. Refer to the shipping label for the actual reflow temperature that will be used to mount the part to the printed circuit board.

(6) **Part marking:** There may be an additional marking, which relates to the logo, the lot trace code information, or the environmental category of the part.

Multiple part markings will be inside parentheses. Only one part marking contained in parentheses and separated by a "~" will appear on a part. If a line is indented then it is a continuation of the previous line and the two combined represent the entire part marking for that device.

Important Information and Disclaimer: The information provided on this page represents TI's knowledge and belief as of the date that it is provided. TI bases its knowledge and belief on information provided by third parties, and makes no representation or warranty as to the accuracy of such information. Efforts are underway to better integrate information from third parties. TI has taken and continues to take reasonable steps to provide representative

and accurate information but may not have conducted destructive testing or chemical analysis on incoming materials and chemicals. TI and TI suppliers consider certain information to be proprietary, and thus CAS numbers and other limited information may not be available for release.

In no event shall TI's liability arising out of such information exceed the total purchase price of the TI part(s) at issue in this document sold by TI to Customer on an annual basis.

TAPE AND REEL INFORMATION

REEL DIMENSIONS

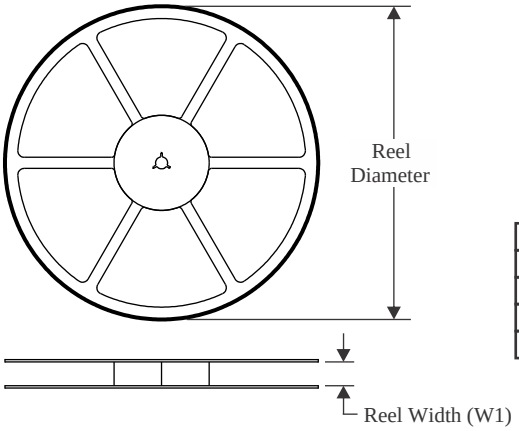

TAPE DIMENSIONS

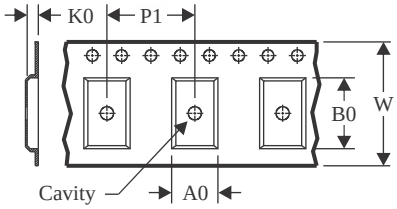

A0	Dimension designed to accommodate the component width
B0	Dimension designed to accommodate the component length
K0	Dimension designed to accommodate the component thickness
W	Overall width of the carrier tape
P1	Pitch between successive cavity centers

QUADRANT ASSIGNMENTS FOR PIN 1 ORIENTATION IN TAPE

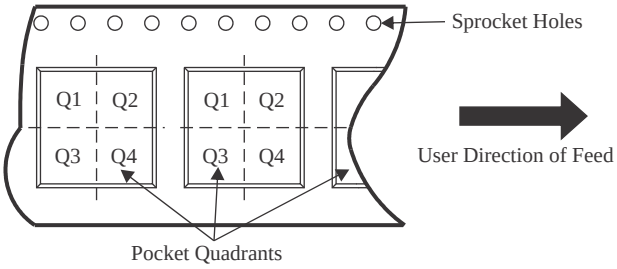

*All dimensions are nominal

Device	Package Type	Package Drawing	Pins	SPQ	Reel Diameter (mm)	Reel Width W1 (mm)	A0 (mm)	B0 (mm)	K0 (mm)	P1 (mm)	W (mm)	Pin1 Quadrant
BQ24600RVAR	VQFN	RVA	16	3000	330.0	12.4	3.75	3.75	1.15	8.0	12.0	Q2
BQ24600RVAT	VQFN	RVA	16	250	180.0	12.4	3.75	3.75	1.15	8.0	12.0	Q2
BQ24600RVATG4	VQFN	RVA	16	250	180.0	12.4	3.75	3.75	1.15	8.0	12.0	Q2

TAPE AND REEL BOX DIMENSIONS

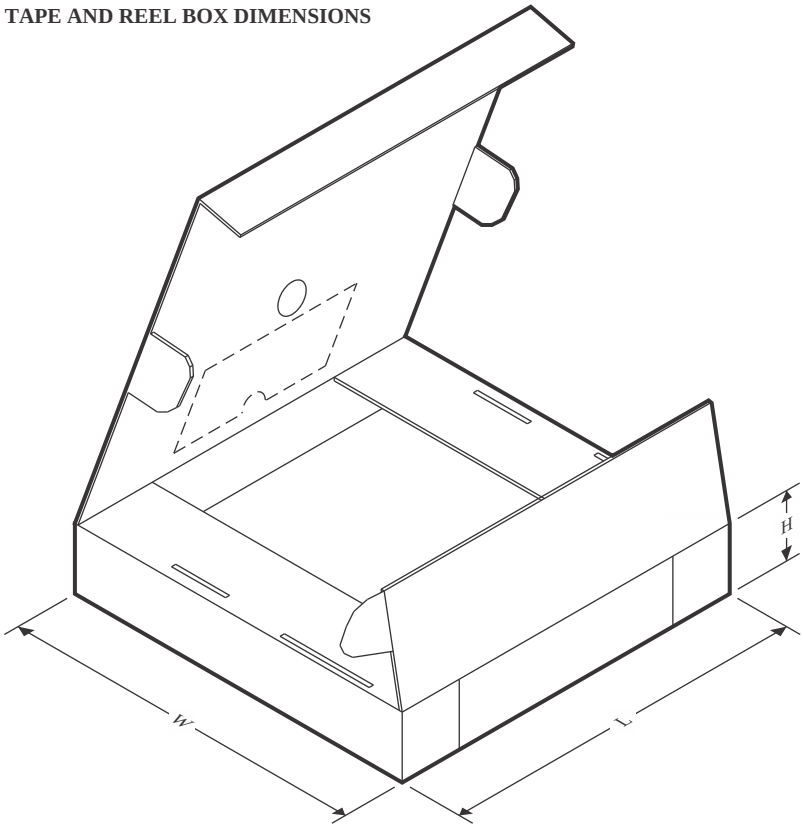

*All dimensions are nominal

Device	Package Type	Package Drawing	Pins	SPQ	Length (mm)	Width (mm)	Height (mm)
BQ24600RVAR	VQFN	RVA	16	3000	346.0	346.0	33.0
BQ24600RVAT	VQFN	RVA	16	250	210.0	185.0	35.0
BQ24600RVATG4	VQFN	RVA	16	250	210.0	185.0	35.0

RVA (S–PVQFN–N16) PLASTIC QUAD FLATPACK NO–LEAD

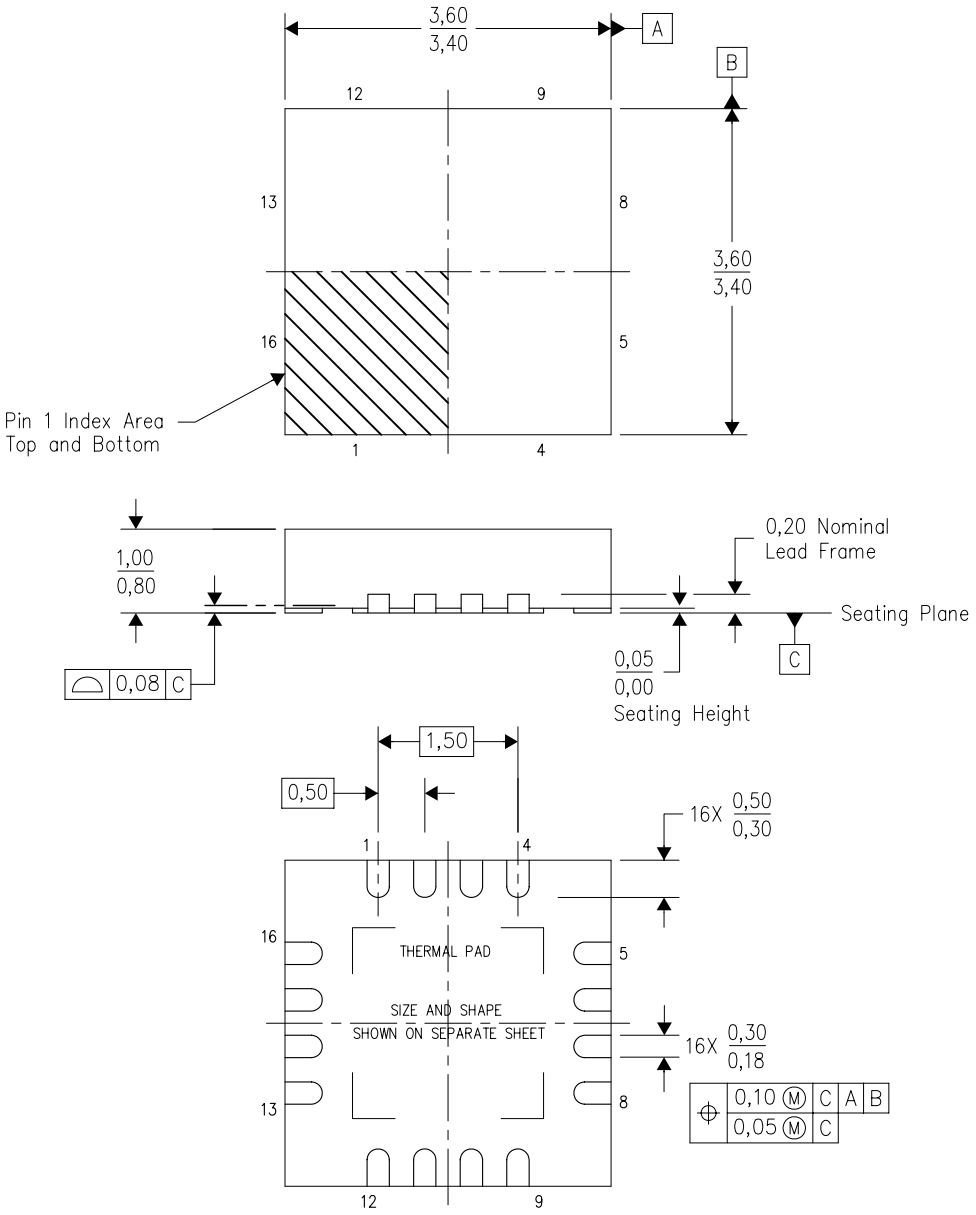

Bottom View

4209676/C 05/11

NOTES:
A. All linear dimensions are in millimeters. Dimensioning and tolerancing per ASME Y14.5M–1994.
B. This drawing is subject to change without notice.
C. QFN (Quad Flatpack No–Lead) package configuration.
D. The package thermal pad must be soldered to the board for thermal and mechanical performance.
E. See the additional figure in the Product Data Sheet for details regarding the exposed thermal pad features and dimensions.

IMPORTANT NOTICE AND DISCLAIMER

TI PROVIDES TECHNICAL AND RELIABILITY DATA (INCLUDING DATASHEETS), DESIGN RESOURCES (INCLUDING REFERENCE DESIGNS), APPLICATION OR OTHER DESIGN ADVICE, WEB TOOLS, SAFETY INFORMATION, AND OTHER RESOURCES “AS IS” AND WITH ALL FAULTS, AND DISCLAIMS ALL WARRANTIES, EXPRESS AND IMPLIED, INCLUDING WITHOUT LIMITATION ANY IMPLIED WARRANTIES OF MERCHANTABILITY, FITNESS FOR A PARTICULAR PURPOSE OR NON-INFRINGEMENT OF THIRD PARTY INTELLECTUAL PROPERTY RIGHTS.

These resources are intended for skilled developers designing with TI products. You are solely responsible for (1) selecting the appropriate TI products for your application, (2) designing, validating and testing your application, and (3) ensuring your application meets applicable standards, and any other safety, security, regulatory or other requirements.

These resources are subject to change without notice. TI grants you permission to use these resources only for development of an application that uses the TI products described in the resource. Other reproduction and display of these resources is prohibited. No license is granted to any other TI intellectual property right or to any third party intellectual property right. TI disclaims responsibility for, and you fully indemnify TI and its representatives against any claims, damages, costs, losses, and liabilities arising out of your use of these resources.

TI’s products are provided subject to TI’s Terms of Sale, TI’s General Quality Guidelines, or other applicable terms available either on ti.com or provided in conjunction with such TI products. TI’s provision of these resources does not expand or otherwise alter TI’s applicable warranties or warranty disclaimers for TI products. Unless TI explicitly designates a product as custom or customer-specified, TI products are standard, catalog, general purpose devices.

TI objects to and rejects any additional or different terms you may propose.

Copyright © 2026, Texas Instruments Incorporated

Last updated 10/2025