ISO7142CC 4242 V_{PK} 小型封装低功耗四通道数字隔离器

1 特性

- 最大信号传输速率：50Mbps（5V 电源供电）
- 具有集成噪声滤波器的稳健设计
- 低功耗，每通道 I_{CC} 典型值（3.3V 电源）：
  - 1Mbps 时为 1.3mA，25Mbps 时为 2.5mA
- 宽温度范围：–55°C 至 +125°C
- 典型值为 50kV/µs 的瞬态抗扰度
- 使用 SiO_2 绝缘隔栅实现长使用寿命
- 可由 2.7V、3.3V 和 5V 电源供电
- 2.7V 和 5V 电平转换
- 小型四分之一尺寸小外形封装 (QSOP)-16 封装
- 安全及管理批准
  - 符合 UL 1577 标准且长达 1 分钟的 2500 V_{RMS} 隔离
  - 符合 DIN V VDE V 0884-10 (VDE V 0884-10):2006-12 标准的 4242 V_{PK} 隔离
  - CSA 组件验收通知 5A，IEC 60950-1 和 IEC 61010-1 终端设备标准
  - 符合 GB4943.1-2011 的 CQC 认证

2 应用

- 通用隔离
- 工业自动化
- 电机控制
- 太阳能逆变器

3 说明

ISO7142CC 器件可提供符合 UL 1577 标准的长达 1 分钟且高达 2500 V_{RMS} 的电流隔离，以及符合 VDE V 0884-10 标准的 4242 V_{PK}隔离。

ISO7142CC 是一款四通道隔离器，此隔离器具有两个正向和两个反向通道。此器件在由 5V 电源供电时的最大数据传输速率为 50Mbps，而在由 3.3V 或 2.7V 电源供电时的最大数据传输速率为 40Mbps。

ISO7142CC 器件的输入端集成有滤波器，适用于易受噪声干扰的应用。

每个隔离通道都有一个由二氧化硅 (SiO_2) 绝缘隔栅分开的逻辑输入和输出缓冲器。与隔离式电源一起使用，这个器件可防止数据总线或者其它电路上的噪音电流进入本地接地和干扰或损坏敏感电路。该器件具有晶体管晶体管逻辑电路 (TTL) 输入阈值，并且可由 2.7V、3.3V 和 5V 电压供电运行。

器件信息(1)

器件型号	封装	封装尺寸（标称值）
ISO7142CC	SSOP (16)	4.90mm × 3.90mm

(1) 要了解所有可用封装，请见数据表末尾的可订购产品附录。

简化电路原理图

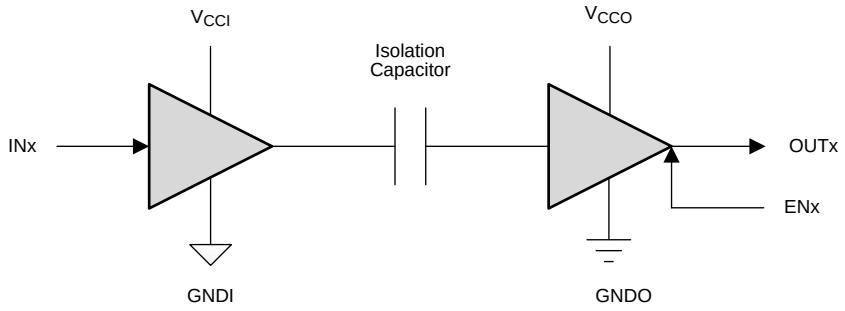

V_{CCI} 和 GNDI 分别是输入通道的电源和接地连接。

V_{CCO} 和 GNDO 分别是输出通道的电源和接地连接。

An IMPORTANT NOTICE at the end of this data sheet addresses availability, warranty, changes, use in safety-critical applications, intellectual property matters and other important disclaimers. PRODUCTION DATA.

目录

1 特性 ... 1
2 应用 ... 1
3 说明 ... 1
4 修订历史记录 ... 2
5 **Pin Configuration and Functions** ... 3
6 **Specifications** ... 4
6.1 Absolute Maximum Ratings ... 4
6.2 ESD Ratings ... 4
6.3 Recommended Operating Conditions ... 4
6.4 Thermal Information ... 4
6.5 Electrical Characteristics—5-V Supply ... 5
6.6 Supply Current Characteristics—5-V Supply ... 5
6.7 Electrical Characteristics—3.3-V Supply ... 5
6.8 Supply Current Characteristics—3.3-V Supply ... 6
6.9 Electrical Characteristics—2.7-V Supply ... 6
6.10 Supply Current Characteristics—2.7-V Supply ... 6
6.11 Power Dissipation Characteristics ... 6
6.12 Switching Characteristics—5-V Supply ... 7
6.13 Switching Characteristics—3.3-V Supply ... 7
6.14 Switching Characteristics—2.7-V Supply ... 8
6.15 Typical Characteristics ... 8
7 **Parameter Measurement Information** ... 10
8 **Detailed Description** ... 12
8.1 Overview ... 12
8.2 Functional Block Diagram ... 12
8.3 Feature Description ... 13
8.4 Device Functional Modes ... 15
9 **Application and Implementation** ... 16
9.1 Application Information ... 16
9.2 Typical Application ... 16
10 **Power Supply Recommendations** ... 18
11 **Layout** ... 18
11.1 Layout Guidelines ... 18
11.2 Layout Example ... 19
12 器件和文档支持 ... 20
12.1 文档支持 ... 20
12.2 社区资源 ... 20
12.3 商标 ... 20
12.4 静电放电警告 ... 20
12.5 Glossary ... 20
13 机械、封装和可订购信息 ... 20

4 修订历史记录

注：之前版本的页码可能与当前版本有所不同。

Changes from Revision A (September 2013) to Revision B — **Page**

- 已添加 *引脚配置和功能部分*，*ESD 额定值表*、*特性描述部分*，*器件功能模式*，*应用和实施部分*，*电源相关建议部分*，*布局部分*，*器件和文档支持部分以及机械、封装和可订购信息部分* ... 1
- 已更改 “VDE 标准”至“DIN V VDE V 0884-10 (VDE V 0884-10)2006-12 标准” ... 1

Changes from Original (September 2013) to Revision A — **Page**

- Deleted the MIN value of –55°C from T_J in the RECOMMENDED OPERATING CONDITIONS table ... 4
- Changed the TYP value of C_I From: 3.5 To: 2 pF in the INSULATION AND SAFETY-RELATED SPECIFICATIONS table ... 13
- Changed the CSA column description for Basic Insulation ... 14
- Changed Figure 14 ... 15

Copyright © 2013–2015, Texas Instruments Incorporated

5 Pin Configuration and Functions

DBQ Package
16-Pin SSOP
Top View

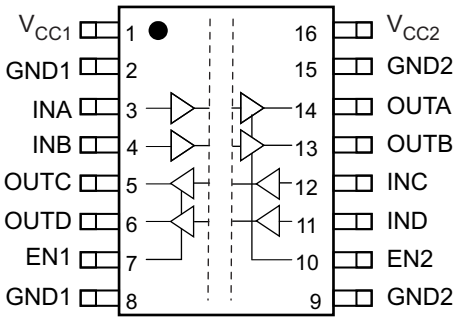

Pin Functions

PIN		I/O	DESCRIPTION
NAME	NO.		
EN1	7	I	Output enable 1. Output pins on side 1 are enabled when EN1 is high or open and in high-impedance state when EN1 is low.
EN2	10	I	Output enable 2. Output pins on side 2 are enabled when EN2 is high or open and in high-impedance state when EN2 is low.
GND1	2	—	Ground connection for V_{CC1}
	8		
GND2	9	—	Ground connection for V_{CC2}
	15		
INA	3	I	Input, channel A
INB	4	I	Input, channel B
INC	12	I	Input, channel C
IND	11	I	Input, channel D
OUTA	14	O	Output, channel A
OUTB	13	O	Output, channel B
OUTC	5	O	Output, channel C
OUTD	6	O	Output, channel D
V_{CC1}	1	—	Power supply, V_{CC1}
V_{CC2}	16	—	Power supply, V_{CC2}

Copyright © 2013–2015, Texas Instruments Incorporated

6 Specifications

6.1 Absolute Maximum Ratings

over operating free-air temperature range (unless otherwise noted)[1]

			MIN	MAX	UNIT
	Supply voltage[2]	V_{CC1}, V_{CC2}	–0.5	6	V
	Voltage	INx, OUTx, ENx	–0.5	V_{CC} + 0.5[3]	V
I_O	Output current		–15	15	mA
T_J	Maximum junction temperature			150	°C
T_{stg}	Storage temperature		–65	150	°C

(1) Stresses beyond those listed under *Absolute Maximum Ratings* may cause permanent damage to the device. These are stress ratings only, and functional operation of the device at these or any other conditions beyond those indicated under *Recommended Operating Conditions* is not implied. Exposure to absolute-maximum-rated conditions for extended periods may affect device reliability.
(2) All voltage values except differential I/O bus voltages are with respect to the local ground terminal (GND1 or GND2) and are peak voltage values.
(3) Maximum voltage must not exceed 6 V.

6.2 ESD Ratings

			VALUE	UNIT
$V_{(ESD)}$	Electrostatic discharge	Human body model (HBM), per ANSI/ESDA/JEDEC JS-001[1]	±4000	V
		Charged-device model (CDM), per JEDEC specification JESD22-C101[2]	±1500	

(1) JEDEC document JEP155 states that 500-V HBM allows safe manufacturing with a standard ESD control process.
(2) JEDEC document JEP157 states that 250-V CDM allows safe manufacturing with a standard ESD control process.

6.3 Recommended Operating Conditions

			MIN	NOM	MAX	UNIT
V_{CC1}, V_{CC2}	Supply voltage		2.7		5.5	V
I_{OH}	High-level output current	V_{CC} ≥ 3 V	–4			mA
		V_{CC} < 3 V	–2			
I_{OL}	Low-level output current				4	mA
V_{IH}	High-level input voltage		2		5.5	V
V_{IL}	Low-level input voltage		0		0.8	V
t_{ui}	Input pulse duration	V_{CC} ≥ 4.5 V	20			ns
		V_{CC} < 4.5 V	25			
1 / t_{ui}	Signaling rate	V_{CC} ≥ 4.5 V	0		50	Mbps
		V_{CC} < 4.5 V	0		40	
T_J	Junction temperature				136	°C
T_A	Ambient temperature		–55	25	125	°C

6.4 Thermal Information

THERMAL METRIC[1]		ISO7142CC DBQ (SSOP) 16 PINS	UNIT
$R_{\theta JA}$	Junction-to-ambient thermal resistance	104.5	°C/W
$R_{\theta JC(top)}$	Junction-to-case(top) thermal resistance	57.8	°C/W
$R_{\theta JB}$	Junction-to-board thermal resistance	46.8	°C/W
ψ_{JT}	Junction-to-top characterization parameter	18.3	°C/W
ψ_{JB}	Junction-to-board characterization parameter	46.4	°C/W
$R_{\theta JCbot}$	Junction-to-case (bottom) thermal resistance	N/A	°C/W

(1) For more information about traditional and new thermal metrics, see the *Semiconductor and IC Package Thermal Metrics* application report, SPRA953.

Copyright © 2013–2015, Texas Instruments Incorporated

6.5 Electrical Characteristics—5-V Supply

V_{CC1} and V_{CC2} at 5 V ± 10% (over recommended operating conditions unless otherwise noted.)

PARAMETER		TEST CONDITIONS	MIN	TYP	MAX	UNIT
V_{OH}	High-level output voltage	I_{OH} = –4 mA; see Figure 8	V_{CCO} (1) – 0.5			V
		I_{OH} = –20 µA; see Figure 8	V_{CCO} – 0.1			
V_{OL}	Low-level output voltage	I_{OL} = 4 mA; see Figure 8			0.4	V
		I_{OL} = 20 µA; see Figure 8			0.1	
$V_{I(HYS)}$	Input threshold voltage hysteresis			480		mV
I_{IH}	High-level input current	V_{IH} = V_{CCI} (1) at INx or ENx			10	µA
I_{IL}	Low-level input current	V_{IL} = 0 V at INx or ENx	–10			
CMTI	Common-mode transient immunity	V_I = V_{CCI} or 0 V; see Figure 11	25	70		kV/µs

(1) V_{CCI}= Supply voltage for the input channel; V_{CCO} = Supply voltage for the output channel

6.6 Supply Current Characteristics—5-V Supply

V_{CC1} and V_{CC2} at 5 V ± 10% (over recommended operating conditions unless otherwise noted.)

PARAMETER	TEST CONDITIONS		SUPPLY CURRENT	MIN	TYP	MAX	UNIT
Supply current for V_{CC1} and V_{CC2}	Disable	EN1 = EN2 = 0 V	I_{CC1}, I_{CC2}		0.8	1.6	mA
	DC to 1 Mbps	DC signal: V_I = V_{CCI} or 0 V, AC signal: All channels switching with square wave clock input; C_L = 15 pF	I_{CC1} , I_{CC2}		3.3	5	
	10 Mbps	DC signal: V_I = V_{CCI} or 0 V, AC signal: All channels switching with square wave clock input; C_L = 15 pF	I_{CC1}, I_{CC2}		4.9	7	
	25 Mbps	DC signal: V_I = V_{CCI} or 0 V, AC signal: All channels switching with square wave clock input; C_L = 15 pF	I_{CC1}, I_{CC2}		7.3	10	
	50 Mbps	DC signal: V_I = V_{CCI} or 0 V, AC signal: All channels switching with square wave clock input; C_L = 15 pF	I_{CC1}, I_{CC2}		11.1	14.5	

6.7 Electrical Characteristics—3.3-V Supply

V_{CC1} and V_{CC2} at 3.3 V ± 10% (over recommended operating conditions unless otherwise noted.)

PARAMETER		TEST CONDITIONS	MIN	TYP	MAX	UNIT
V_{OH}	High-level output voltage	I_{OH} = –4 mA; see Figure 8	V_{CCO} (1) – 0.5			V
		I_{OH} = –20 µA; see Figure 8	V_{CCO} – 0.1			
V_{OL}	Low-level output voltage	I_{OL} = 4 mA; see Figure 8			0.4	V
		I_{OL} = 20 µA; see Figure 8			0.1	
$V_{I(HYS)}$	Input threshold voltage hysteresis			460		mV
I_{IH}	High-level input current	V_{IH} = V_{CCI} (1) at INx or ENx			10	µA
I_{IL}	Low-level input current	V_{IL} = 0 V at INx or ENx	–10			
CMTI	Common-mode transient immunity	V_I = V_{CCI} or 0 V; see Figure 11	25	50		kV/µs

(1) V_{CCI}= Supply voltage for the input channel; V_{CCO} = Supply voltage for the output channel

Copyright © 2013–2015, Texas Instruments Incorporated

6.8 Supply Current Characteristics—3.3-V Supply

V_{CC1} and V_{CC2} at 3.3 V ± 10% (over recommended operating conditions unless otherwise noted.)

PARAMETER	TEST CONDITIONS		SUPPLY CURRENT	MIN	TYP	MAX	UNIT
Supply current for V_{CC1} and V_{CC2}	Disable	EN1 = EN2 = 0 V	I_{CC1}, I_{CC2}		0.5	1	mA
	DC to 1 Mbps	DC signal: $V_I = V_{CCI}$ or 0 V AC signal: All channels switching with square-wave clock input; C_L = 15 pF	I_{CC1}, I_{CC2}		2.5	4	
	10 Mbps	DC signal: $V_I = V_{CCI}$ or 0 V, AC signal: All channels switching with square wave clock input; C_L = 15 pF	I_{CC1}, I_{CC2}		3.5	5	
	25 Mbps	DC signal: $V_I = V_{CCI}$ or 0 V, AC signal: All channels switching with square wave clock input; C_L = 15 pF	I_{CC1}, I_{CC2}		5	7	
	40 Mbps	DC signal: $V_I = V_{CCI}$ or 0 V, AC signal: All channels switching with square wave clock input; C_L = 15 pF	I_{CC1}, I_{CC2}		6.5	10	

6.9 Electrical Characteristics—2.7-V Supply

V_{CC1} and V_{CC2} at 2.7 V (over recommended operating conditions unless otherwise noted.)

PARAMETER		TEST CONDITIONS	MIN	TYP	MAX	UNIT
V_{OH}	High-level output voltage	I_{OH} = –2 mA; see Figure 8	V_{CCO} (1) – 0.3			V
		I_{OH} = –20 µA; see Figure 8	V_{CCO} – 0.1			
V_{OL}	Low-level output voltage	I_{OL} = 4 mA; see Figure 8			0.4	V
		I_{OL} = 20 µA; see Figure 8			0.1	
$V_{I(HYS)}$	Input threshold voltage hysteresis			360		mV
I_{IH}	High-level input current	$V_{IH} = V_{CCI}$ (1) at INx or ENx			10	µA
I_{IL}	Low-level input current	V_{IL} = 0 V at INx or ENx	–10			
CMTI	Common-mode transient immunity	$V_I = V_{CCI}$ or 0 V; see Figure 11	25	45		kV/µs

(1) V_{CCI}= Supply voltage for the input channel; V_{CCO} = Supply voltage for the output channel

6.10 Supply Current Characteristics—2.7-V Supply

V_{CC1} and V_{CC2} at 2.7 V (over recommended operating conditions unless otherwise noted.)

PARAMETER	TEST CONDITIONS		SUPPLY CURRENT	MIN	TYP	MAX	UNIT
Supply current for V_{CC1} and V_{CC2}	Disable	EN1 = EN2 = 0 V	I_{CC1}, I_{CC2}		0.4	0.8	mA
	DC to 1 Mbps	DC signal: $V_I = V_{CCI}$ or 0 V AC signal: All channels switching with square-wave clock input; C_L = 15 pF	I_{CC1}, I_{CC2}		2.2	3.5	
	10 Mbps	DC signal: $V_I = V_{CCI}$ or 0 V, AC signal: All channels switching with square wave clock input; C_L = 15 pF	I_{CC1}, I_{CC2}		3	4.2	
	25 Mbps	DC signal: $V_I = V_{CCI}$ or 0 V, AC signal: All channels switching with square wave clock input; C_L = 15 pF	I_{CC1}, I_{CC2}		4.2	5.5	
	40 Mbps	DC signal: $V_I = V_{CCI}$ or 0 V, AC signal: All channels switching with square wave clock input; C_L = 15 pF	I_{CC1}, I_{CC2}		5.4	7.5	

6.11 Power Dissipation Characteristics

PARAMETER		TEST CONDITIONS	MIN	TYP	MAX	UNIT
P_D	Device power dissipation	$V_{CC1} = V_{CC2}$ = 5.5 V, T_J = 150°C, C_L = 15 pF Input a 25-MHz, 50% duty cycle square wave			170	mW

Copyright © 2013–2015, Texas Instruments Incorporated

6.12 Switching Characteristics—5-V Supply

V_{CC1} and V_{CC2} at 5 V ± 10% (over recommended operating conditions unless otherwise noted.)

PARAMETER		TEST CONDITIONS	MIN	TYP	MAX	UNIT
t_{PLH}, t_{PHL}	Propagation delay time	See Figure 8	15	21	38	ns
PWD (1)	Pulse width distortion $\|t_{PHL} – t_{PLH}\|$	See Figure 8			3.5	ns
$t_{sk(o)}$ (2)	Channel-to-channel output skew time	Same-direction channels			1.5	ns
		Opposite-direction channels			6.5	
$t_{sk(pp)}$ (3)	Part-to-part skew time				14	ns
t_r	Output signal rise time	See Figure 8		2.5		ns
t_f	Output signal fall time	See Figure 8		2.1		ns
t_{PHZ}, t_{PLZ}	Disable propagation delay, high/low-to-high impedance output	See Figure 9		7	12	ns
t_{PZH}	Enable propagation delay, high impedance-to-high output	See Figure 9		6	12	ns
t_{PZL}	Enable propagation delay, high impedance-to-low output	See Figure 9		12	23	us
t_{fs}	Fail-safe output delay time from input data or power loss	See Figure 10		8		µs
t_{GR}	Input glitch rejection time			9.5		ns

(1) Also known as pulse skew
(2) $t_{sk(o)}$ is the skew between outputs of a single device with all driving inputs connected together and the outputs switching in the same direction while driving identical loads.
(3) $t_{sk(pp)}$ is the magnitude of the difference in propagation delay times between any terminals of different devices switching in the same direction while operating at identical supply voltages, temperature, input signals, and loads.

6.13 Switching Characteristics—3.3-V Supply

V_{CC1} and V_{CC2} at 3.3 V ± 10% (over recommended operating conditions unless otherwise noted.)

PARAMETER		TEST CONDITIONS	MIN	TYP	MAX	UNIT
t_{PLH}, t_{PHL}	Propagation delay time	See Figure 8	16	25	46	ns
PWD (1)	Pulse width distortion $\|t_{PHL} – t_{PLH}\|$	See Figure 8			3	ns
$t_{sk(o)}$ (2)	Channel-to-channel output skew time	Same-direction Channels			2	ns
		Opposite-direction Channels			6.5	
$t_{sk(pp)}$ (3)	Part-to-part skew time				21	ns
t_r	Output signal rise time	See Figure 8		3		ns
t_f	Output signal fall time	See Figure 8		2.5		ns
t_{PHZ}, t_{PLZ}	Disable propagation delay, from high/low to high-impedance output	See Figure 9		9	14	ns
t_{PZH}	Enable propagation delay, from high-impedance to high output	See Figure 9		9	17	ns
t_{PZL}	Enable propagation delay, from high-impedance to low output	See Figure 9		12	24	us
t_{fs}	Fail-safe output delay time from input data or power loss	See Figure 10		7		µs
t_{GR}	Input glitch rejection time			11		ns

(1) Also known as pulse skew
(2) $t_{sk(o)}$ is the skew between outputs of a single device with all driving inputs connected together and the outputs switching in the same direction while driving identical loads.
(3) $t_{sk(pp)}$ is the magnitude of the difference in propagation delay times between any terminals of different devices switching in the same direction while operating at identical supply voltages, temperature, input signals and loads.

Copyright © 2013–2015, Texas Instruments Incorporated

6.14 Switching Characteristics—2.7-V Supply

V_{CC1} and V_{CC2} at 2.7 V (over recommended operating conditions unless otherwise noted.)

PARAMETER		TEST CONDITIONS	MIN	TYP	MAX	UNIT
t_{PLH}, t_{PHL}	Propagation delay time	See Figure 8	18	28	50	ns
PWD (1)	Pulse width distortion $\|t_{PHL} - t_{PLH}\|$	See Figure 8			3	ns
$t_{sk(o)}$ (2)	Channel-to-channel output skew time	Same-direction Channels			3	ns
		Opposite-direction Channels			8.5	ns
$t_{sk(pp)}$ (3)	Part-to-part skew time				24	ns
t_r	Output signal rise time	See Figure 8		3.5		ns
t_f	Output signal fall time	See Figure 8		2.8		ns
t_{PHZ}, t_{PLZ}	Disable propagation delay, from high/low to high-impedance output	See Figure 9		10	15	ns
t_{PZH}	Enable propagation delay, from high-impedance to high output	See Figure 9		10	19	ns
t_{PZL}	Enable propagation delay, from high-impedance to low output	See Figure 9		12	23	us
t_{fs}	Fail-safe output delay time from input data or power loss	See Figure 10		7		µs
t_{GR}	Input glitch rejection time			12		ns

(1) Also known as pulse skew
(2) $t_{sk(o)}$ is the skew between outputs of a single device with all driving inputs connected together and the outputs switching in the same direction while driving identical loads.
(3) $t_{sk(pp)}$ is the magnitude of the difference in propagation delay times between any terminals of different devices switching in the same direction while operating at identical supply voltages, temperature, input signals, and loads.

6.15 Typical Characteristics

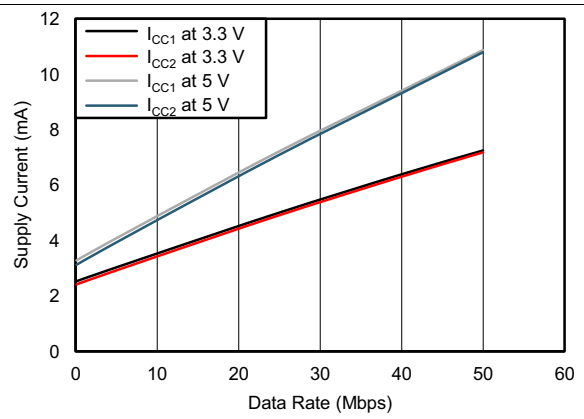

Figure 1. ISO7142 Supply Current for All Channels vs Data Rate

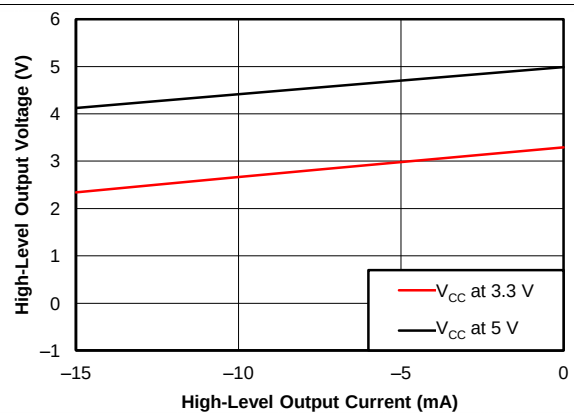

Figure 2. High-Level Output Voltage vs High-Level Output Current

Copyright © 2013–2015, Texas Instruments Incorporated

Typical Characteristics (continued)

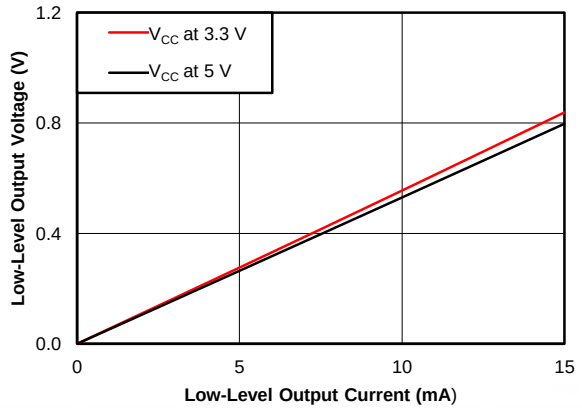

Figure 3. Low-Level Output Voltage vs Low-Level Output Current

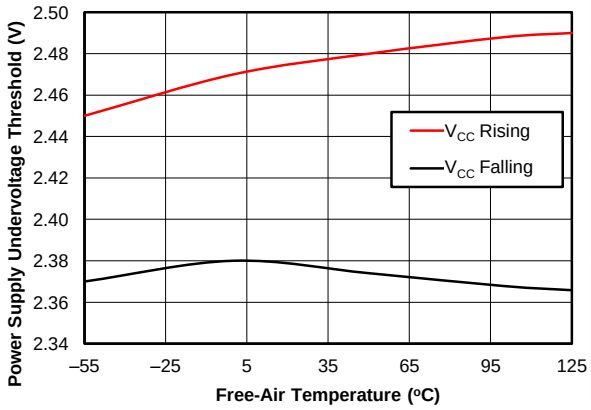

Figure 4. V_{CC} Undervoltage Threshold vs Free-Air Temperature

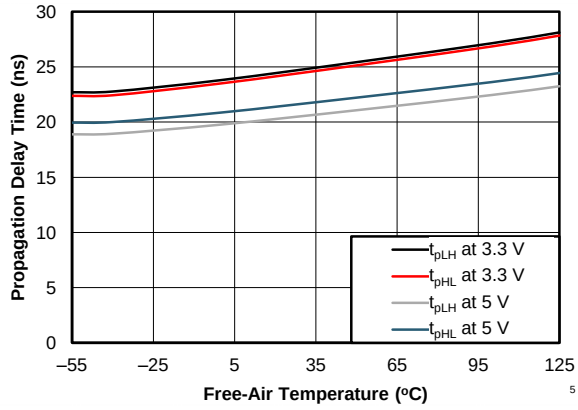

Figure 5. Propagation Delay Time vs Free-Air Temperature

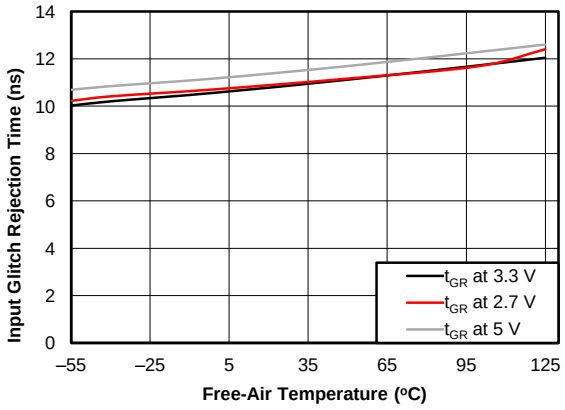

Figure 6. Input Glitch Rejection Time vs Free-Air Temperature

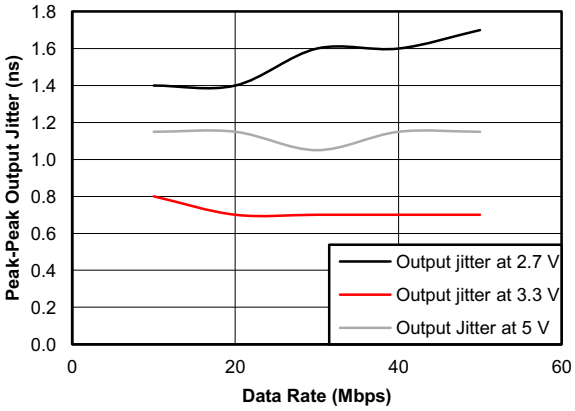

Figure 7. Peak-Peak Output Jitter vs Data Rate

7 Parameter Measurement Information

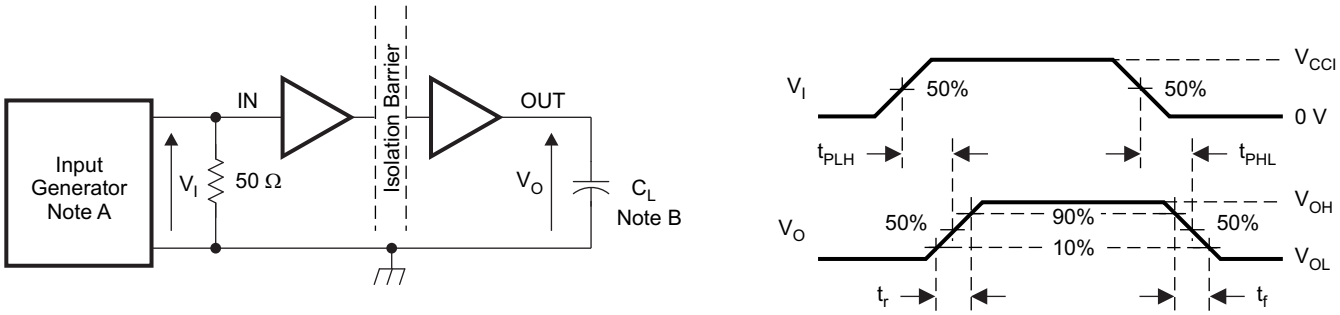

A. The input pulse is supplied by a generator having the following characteristics: PRR ≤ 50 kHz, 50% duty cycle, t_r ≤ 3 ns, t_f ≤ 3 ns, Z_O = 50 Ω. At the input, a 50-Ω resistor is required to terminate the input-generator signal. It is not needed in an actual application.

B. C_L = 15 pF and includes instrumentation and fixture capacitance within ±20%.

Figure 8. Switching-Characteristics Test Circuit and Voltage Waveforms

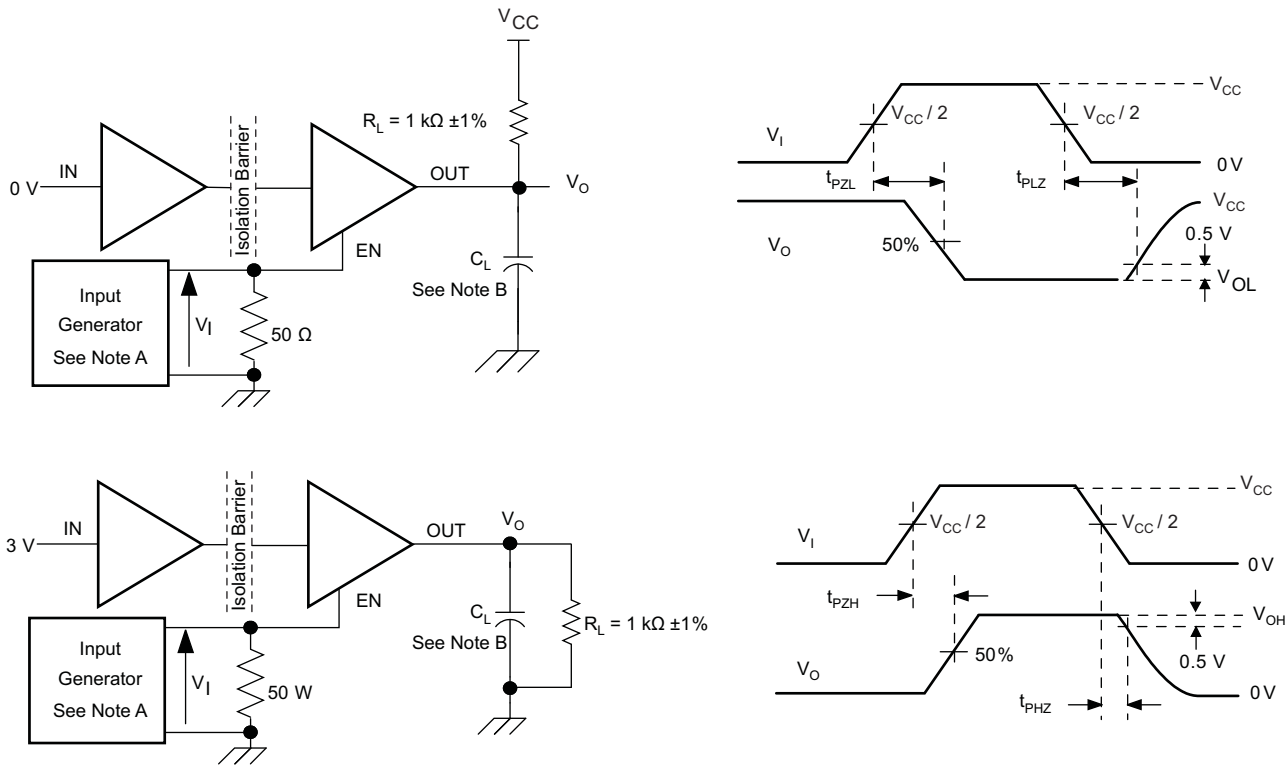

A. The input pulse is supplied by a generator having the following characteristics: PRR ≤ 50 kHz, 50% duty cycle, t_r ≤ 3 ns, t_f ≤ 3 ns, Z_O = 50 Ω.

B. C_L = 15 pF and includes instrumentation and fixture capacitance within ±20%.

Figure 9. Enable/Disable Propagation Delay-Time Test Circuit and Waveform

Copyright © 2013–2015, Texas Instruments Incorporated

Parameter Measurement Information (continued)

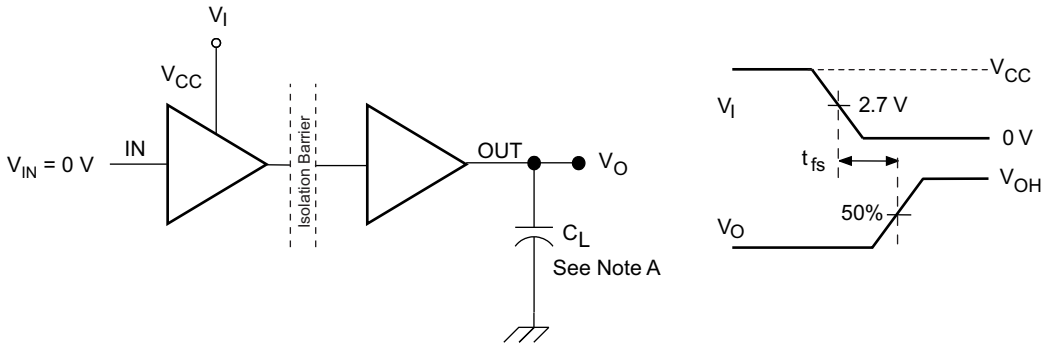

A. C_L = 15 pF and includes instrumentation and fixture capacitance within ±20%.

Figure 10. Failsafe Delay-Time Test Circuit and Voltage Waveforms

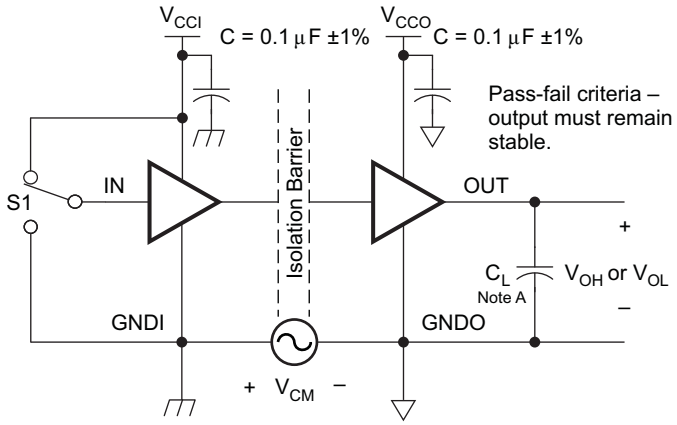

A. C_L = 15pF and includes instrumentation and fixture capacitance within ±20%.

Figure 11. Common-Mode Transient Immunity Test Circuit

8 Detailed Description

8.1 Overview

The isolator in Figure 12 is based on a capacitive isolation barrier technique. The I/O channel of the device consists of two internal data channels, a high-frequency channel (HF) with a bandwidth from 100 kbps up to 50 Mbps, and a low-frequency channel (LF) covering the range from 100 kbps down to DC. In principle, a single-ended input signal entering the HF-channel is split into a differential signal through the inverter gate at the input. The following capacitor-resistor networks differentiate the signal into transients, which then are converted into differential pulses by two comparators. The comparator outputs drive a NOR-gate flip-flop whose output feeds an output multiplexer. A decision logic (DCL) at the driving output of the flip-flop measures the durations between signal transients. If the duration between two consecutive transients exceeds a certain time limit, (as in the case of a low-frequency signal), the DCL forces the output-multiplexer to switch from the high- to the low-frequency channel.

Because low-frequency input signals require the internal capacitors to assume prohibitively large values, these signals are pulse-width modulated (PWM) with the carrier frequency of an internal oscillator, thus creating a sufficiently high frequency signal, capable of passing the capacitive barrier. As the input is modulated, a low-pass filter (LPF) is needed to remove the high-frequency carrier from the actual data before passing it on to the output multiplexer.

8.2 Functional Block Diagram

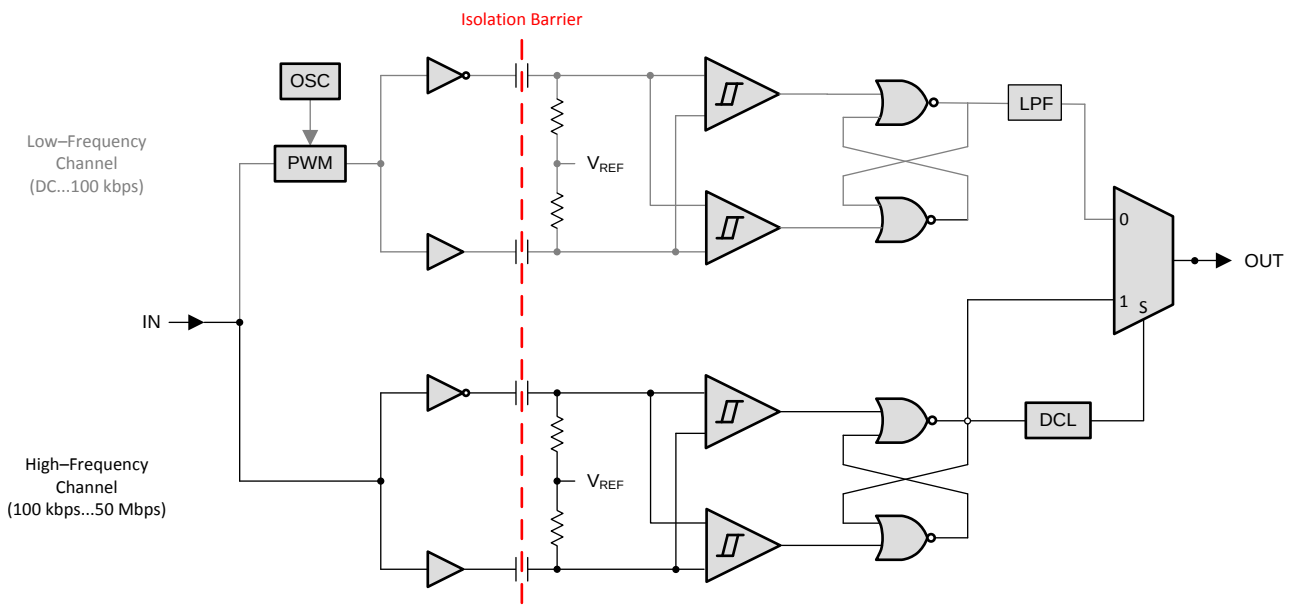

Figure 12. Conceptual Block Diagram of a Digital Capacitive Isolator

Copyright © 2013–2015, Texas Instruments Incorporated

8.3 Feature Description

8.3.1 Insulation and Safety-Related Specifications

PARAMETER		TEST CONDITIONS	MIN	TYP	MAX	UNIT
DTI	Distance through the insulation	Minimum internal gap (internal clearance)	0.014			mm
C_I (1)	Input capacitance	$V_I = V_{CC}/2 + 0.4 \sin(2\pi ft)$, f = 1 MHz, V_{CC} = 5 V		2		pF
DIN V VDE V 0884-10 (VDE V 0884-10):2006-12						
V_{IOTM}	Maximum transient isolation voltage				4242	V_{PK}
V_{IORM}	Maximum working isolation voltage				566	V_{PK}
V_{PR}	Input-to-output test voltage	After Input/Output safety test subgroup 2/3, $V_{PR} = V_{IORM}$ x 1.2, t = 10 s, Partial discharge < 5 pC			679	V_{PK}
		Method a, After environmental tests subgroup 1, $V_{PR} = V_{IORM}$ x 1.6, t = 10 s, Partial discharge < 5 pC			906	
		Method b1, 100% production test, $V_{PR} = V_{IORM}$ x 1.875, t = 1 s, Partial discharge < 5 pC			1061	
L(I01)	Minimum air gap (clearance)	Shortest terminal to terminal distance through air	3.7			mm
L(I02)	Minimum external tracking (creepage)	Shortest terminal to terminal distance across the package surface	3.7			mm
	Pollution degree			2		
CTI	Tracking resistance (comparative tracking index)	DIN EN 60112 (VDE 0303-11); IEC 60112	≥400			V
R_{IO} (2)	Isolation resistance, input to output	V_{IO} = 500 V, T_A = 25°C		>10^{12}		Ω
		V_{IO} = 500 V, 100°C ≤ T_A ≤ 125°C		>10^{11}		
		V_{IO} = 500 V, T_S = 150°C		>10^{9}		
C_{IO} (2)	Barrier capacitance, input to output	$V_I = 0.4 \sin(2\pi ft)$, f = 1 MHz		2.4		pF
UL 1577						
V_{ISO}	Withstanding Isolation voltage	$V_{TEST} = V_{ISO}$= 2500 V_{RMS}, 60 sec (qualification); V_{TEST} = 1.2 * V_{ISO}= 3000 V_{RMS}, 1 sec (100% production)			2500	V_{RMS}

(1) Measured from input data pin to ground.
(2) All pins on each side of the barrier tied together creating a two-terminal device.

NOTE

Creepage and clearance requirements should be applied according to the specific equipment isolation standards of an application. Care should be taken to maintain the creepage and clearance distance of a board design to ensure that the mounting pads of the isolator on the printed circuit board do not reduce this distance.

Creepage and clearance on a printed circuit board become equal in certain cases. Techniques such as inserting grooves and/or ribs on a printed circuit board are used to help increase these specifications.

Table 1. IEC 60664-1 Ratings Table

PARAMETER	TEST CONDITIONS	SPECIFICATION
Material Group		II
Installation classification / Overvoltage Category for Basic Insulation	Rated mains voltage ≤ 150 V_{RMS}	I–IV
	Rated mains voltage ≤ 300 V_{RMS}	I–III

8.3.2 Regulatory Information

VDE	UL	CSA	CQC
Certified according to DIN V VDE V 0884-10 (VDE V 0884-10):2006-12 and DIN EN 61010-1 (VDE 0411-1):2011-07	Certified under UL 1577 Component Recognition Program	Approved under CSA Component Acceptance Notice 5A, IEC 60950-1 and IEC 61010-1	Certified according to GB 4943.1-2011
Basic Insulation; Maximum transient Isolation IsolatiIsolationvoltage, 4242 V_{PK} Maximum working isolation voltage, 566 V_{PK}	Single protection, 2500 V_{RMS} (1)	3000 V_{RMS} Isolation rating; 185 V_{RMS} Reinforced Insulation and 370 V_{RMS} Basic Insulation per CSA 60950-1-07+A1+A2 and IEC 60950-1 2nd Ed.+A1+A2; 150 V_{RMS} Reinforced Insulation and 300 V_{RMS} Basic Insulation per CSA 61010-1-12 and IEC 61010-1 3rd Ed.	Basic Insulation, Altitude ≤ 5000m, Tropical climate, 250 V_{RMS} maximum working voltage.
File number: 40016131	File number: E181974	Master contract number: 220991	Certificate number: CQC14001109540

(1) Production tested ≥ 3000 V_{RMS} for 1 second in accordance with UL 1577.

8.3.3 Safety Limiting Values

Safety limiting intends to minimize potential damage to the isolation barrier upon failure of input or output circuitry. A failure of the IO can allow low resistance to ground or the supply and, without current limiting, dissipate sufficient power to overheat the die and damage the isolation barrier, potentially leading to secondary system failures.

PARAMETER		TEST CONDITIONS		MIN	TYP	MAX	UNIT
I_S	Safety input, output, or supply current	DBQ-16	θ_{JA} = 104.5°C/W, V_I = 5.5 V, T_J = 150°C, T_A = 25°C			217	mA
			θ_{JA} = 104.5°C/W, V_I = 3.6 V, T_J = 150°C, T_A = 25°C			332	
			θ_{JA} = 104.5°C/W, V_I = 2.7 V, T_J = 150°C, T_A = 25°C			443	
T_S	Maximum safety temperature					150	°C

The safety-limiting constraint is the absolute-maximum junction temperature specified in the *Absolute Maximum Ratings* table. The power dissipation and junction-to-air thermal impedance of the device installed in the application hardware determines the junction temperature. The assumed junction-to-air thermal resistance in the *Thermal Information* table is that of a device installed on a high-K test board for leaded surface-mount packages. The power is the recommended maximum input voltage times the current. The junction temperature is then the ambient temperature plus the power times the junction-to-air thermal resistance.

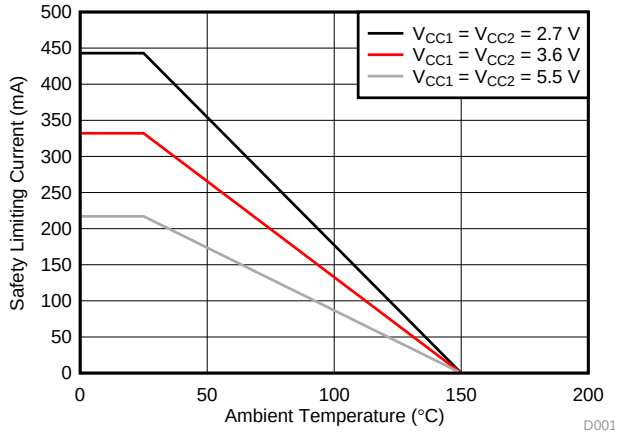

Figure 13. Thermal Derating Curve for Safety Limiting Current per VDE

Copyright © 2013–2015, Texas Instruments Incorporated

8.4 Device Functional Modes

Table 2 lists the functional modes for the ISO7142CC.

Table 2. Function Table(1)

V_{CCI}	V_{CCO}	INPUT (INx)	OUTPUT ENABLE (ENx)	OUTPUT (OUTx)
PU	PU	H	H or open	H
		L	H or open	L
		X	L	Z
		Open	H or open	H
PD	PU	X	H or open	H
PD	PU	X	L	Z
X	PD	X	X	Undetermined

(1) V_{CCI} = Input-side Supply Voltage; V_{CCO} = Output-side Supply Voltage; PU = Powered Up (V_{CC} ≥ 2.7 V); PD = Powered Down (V_{CC} ≤ 2.1 V); X = Irrelevant; H = High Level; L = Low Level; Z = High Impedance

8.4.1 Device I/O Schematics

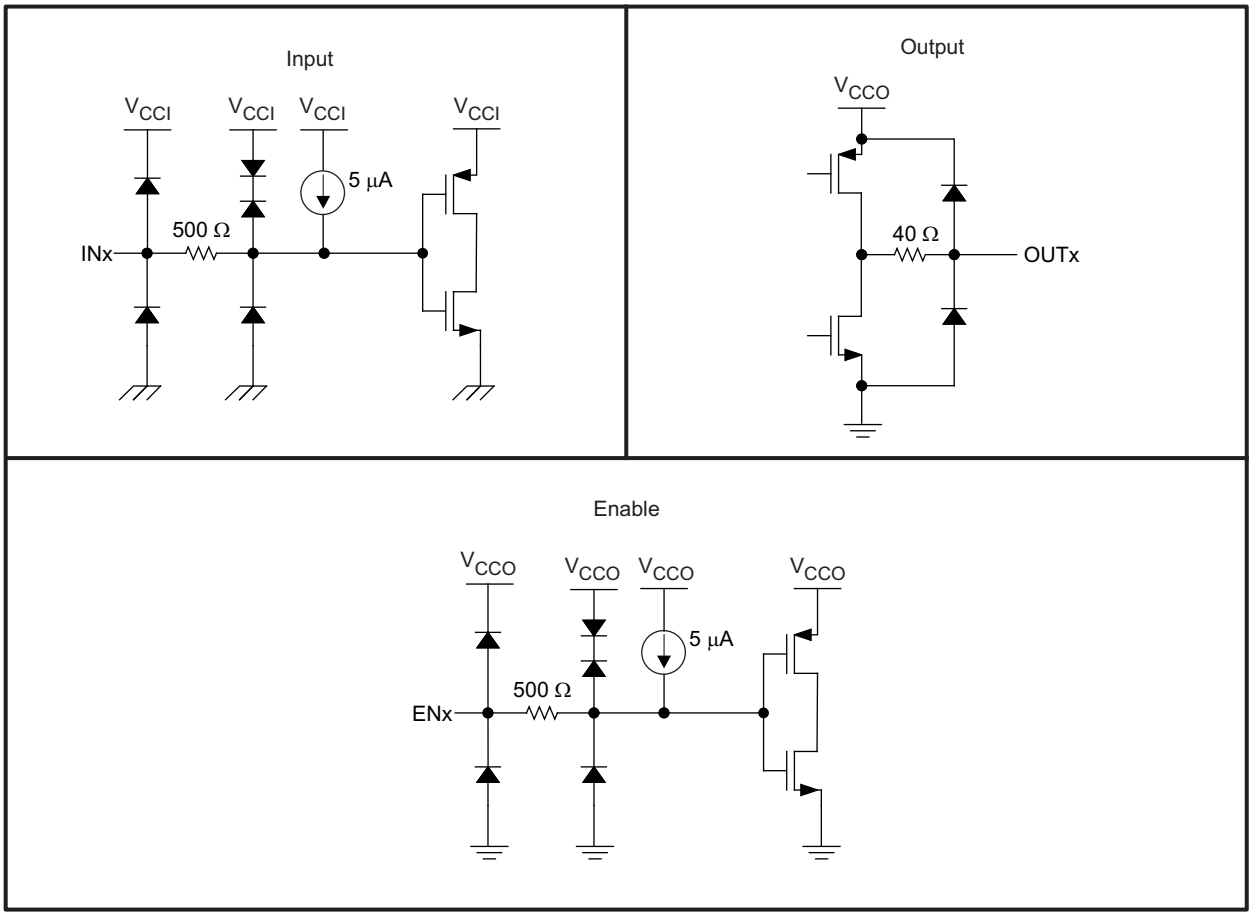

Figure 14. Device I/O Schematics

9 Application and Implementation

NOTE

Information in the following applications sections is not part of the TI component specification, and TI does not warrant its accuracy or completeness. TI's customers are responsible for determining suitability of components for their purposes. Customers should validate and test their design implementation to confirm system functionality.

9.1 Application Information

The ISO7142CC device uses single-ended TTL-logic switching technology. The supply voltage range is from 2.7 V to 5.5 V for both supplies, V_{CC1} and V_{CC2}. When designing with digital isolators, keep in mind that because of the single-ended design structure the single-ended design structure, digital isolators do not conform to any specific interface standard and are only intended for isolating single-ended CMOS or TTL digital signal lines. The isolator is typically placed between the data controller (that is, µC or UART), and a data converter or a line transceiver, regardless of the interface type or standard.

9.2 Typical Application

Figure 15 shows the typical isolated RS-232 interface implementation.

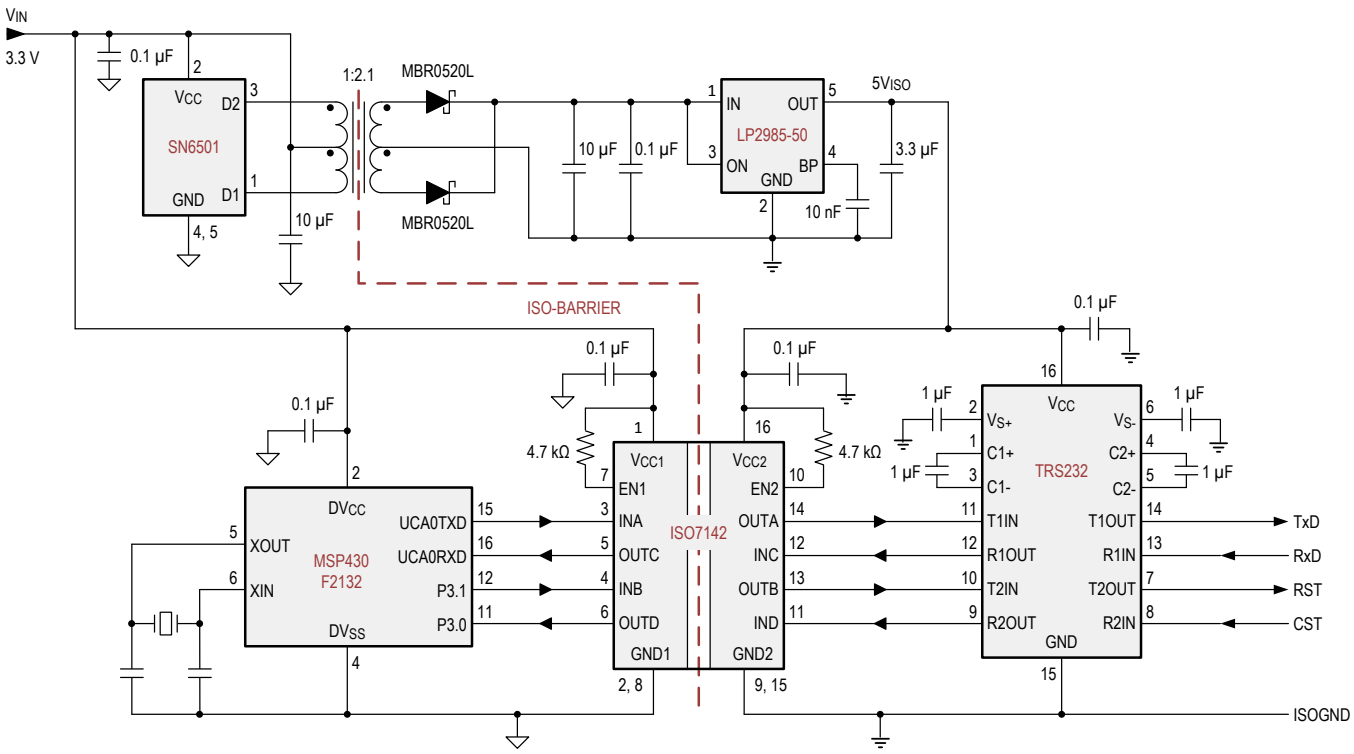

Figure 15. Typical Isolated RS-232 Application Circuit for ISO7142

9.2.1 Design Requirements

Unlike optocouplers, which require external components to improve performance, provide bias, or limit current, the ISO7142CC device only requires two external bypass capacitors to operate.

Copyright © 2013–2015, Texas Instruments Incorporated

Typical Application (continued)

9.2.2 Detailed Design Procedure

Figure 16 shows the hookup of a typical ISO7142CC circuit. The only external components are two bypass capacitors.

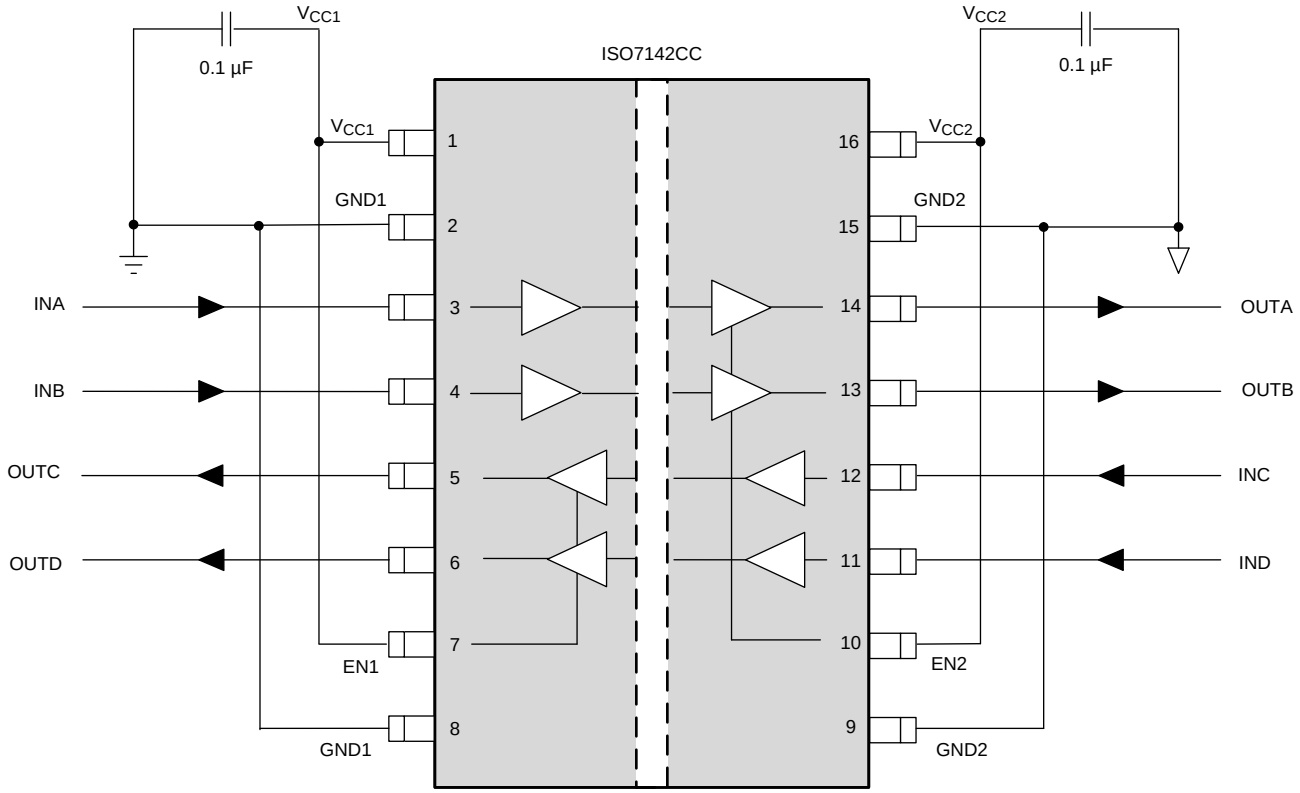

Figure 16. Typical ISO7142CC Circuit Hook-up

9.2.3 Application Curves

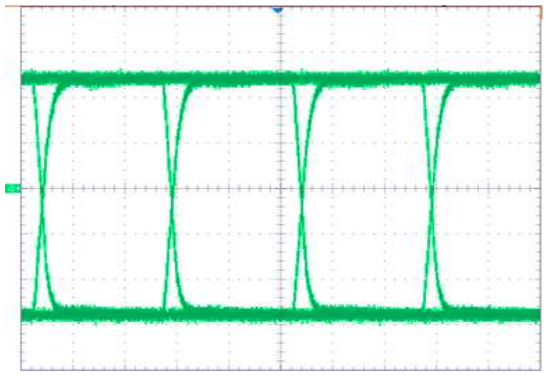

Figure 17. Typical Eye Diagram at 40 Mbps, PRBS 2^{16} - 1, 2.7-V Operation

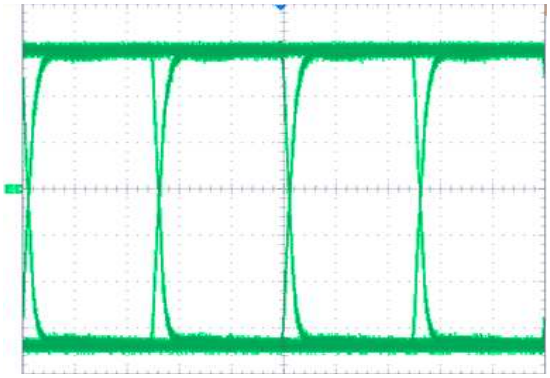

Figure 18. Typical Eye Diagram at 40 Mbps, PRBS 2^{16} - 1, 3.3-V Operation

Typical Application (continued)

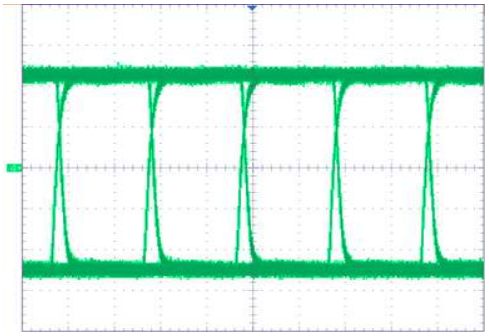

Figure 19. Typical Eye Diagram at 50 Mbps, PRBS 2^{16} - 1, 5-V Operation

10 Power Supply Recommendations

To help ensure reliable operation supply voltages, a 0.1-µF bypass capacitor is recommended at the input and output supply pins (V_{CC1} and V_{CC2}). The capacitors should be placed as close to the supply pins as possible. If only a single primary-side power supply is available in an application, isolated power can be generated for the secondary-side with the help of a transformer driver such as Texas Instruments' SN6501-Q1. For such applications, detailed power supply design and transformer selection recommendations are available in SN6501-Q1 datasheet (SLLSEF3).

11 Layout

11.1 Layout Guidelines

A minimum of four layers is required to accomplish a low EMI PCB design (see Figure 20). Layer stacking should be in the following order (top-to-bottom): high-speed signal layer, ground plane, power plane and low-frequency signal layer.

- Routing the high-speed traces on the top layer avoids the use of vias (and the introduction of their inductances) and allows for clean interconnects between the isolator and the transmitter and receiver circuits of the data link.
- Placing a solid ground plane next to the high-speed signal layer establishes controlled impedance for transmission line interconnects and provides an excellent low-inductance path for the return current flow.
- Placing the power plane next to the ground plane creates additional high-frequency bypass capacitance of approximately 100 pF/in^2.
- Routing the slower speed control signals on the bottom layer allows for greater flexibility as these signal links usually have margin to tolerate discontinuities such as vias.

If an additional supply voltage plane or signal layer is needed, add a second power and ground plane system to the stack to keep it symmetrical. This makes the stack mechanically stable and prevents it from warping. Also the power and ground plane of each power system can be placed closer together, thus increasing the high-frequency bypass capacitance significantly.

For detailed layout recommendations, see the application note, *Digital Isolator Design Guide*, SLLA284.

Copyright © 2013–2015, Texas Instruments Incorporated

Layout Guidelines (continued)

11.1.1 PCB Material

For digital circuit boards operating below 150 Mbps, (or rise and fall times higher than 1 ns), and trace lengths of up to 10 inches, use standard FR-4 UL 94 V-0 printed circuit board. This PCB is preferred over cheaper alternatives because of lower dielectric losses at high frequencies, less moisture absorption, greater strength and stiffness, and self-extinguishing flammability-characteristics.

11.2 Layout Example

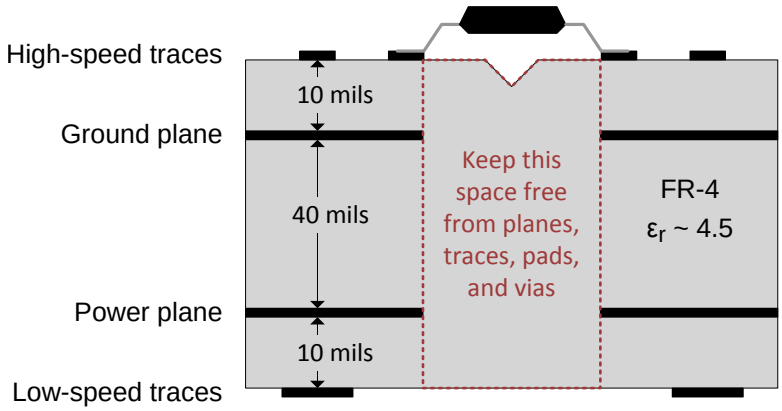

Figure 20. Recommended Layer Stack

12 器件和文档支持

12.1 文档支持

12.1.1 相关文档

相关文档如下：

- *《数字隔离器设计指南》*，SLLA284
- *《隔离相关术语》*，SLLA353
- *《ISO71xx EVM 用户指南》*，SLLU179
- *《LP2985 具有关断模式的 150mA 低噪声低压降滤波器》*，SLVS522
- *《SN6501 用于隔离电源的变压器驱动器》*，SLLSEA0
- *《MSP430F2132 混合信号微控制器》*，SLAS578
- 《TRS232 *具有 IEC61000-4-2 保护的双路 RS-232 驱动器/接收器》*，SLLS861

12.2 社区资源

The following links connect to TI community resources. Linked contents are provided "AS IS" by the respective contributors. They do not constitute TI specifications and do not necessarily reflect TI's views; see TI's Terms of Use.

TI E2E™ Online Community ***TI's Engineer-to-Engineer (E2E) Community.*** Created to foster collaboration among engineers. At e2e.ti.com, you can ask questions, share knowledge, explore ideas and help solve problems with fellow engineers.

Design Support ***TI's Design Support*** Quickly find helpful E2E forums along with design support tools and contact information for technical support.

12.3 商标

E2E is a trademark of Texas Instruments.
All other trademarks are the property of their respective owners.

12.4 静电放电警告

这些装置包含有限的内置 ESD 保护。 存储或装卸时，应将导线一起截短或将装置放置于导电泡棉中，以防止 MOS 门极遭受静电损伤。

12.5 Glossary

SLYZ022 — *TI Glossary*.

This glossary lists and explains terms, acronyms, and definitions.

13 机械、封装和可订购信息

以下页中包括机械、封装和可订购信息。这些信息是针对指定器件可提供的最新数据。这些数据会在无通知且不对本文档进行修订的情况下发生改变。欲获得该数据表的浏览器版本，请查阅左侧的导航栏。

版权 © 2013–2015, Texas Instruments Incorporated

PACKAGING INFORMATION

Orderable part number	Status (1)	Material type (2)	Package | Pins	Package qty | Carrier	RoHS (3)	Lead finish/ Ball material (4)	MSL rating/ Peak reflow (5)	Op temp (°C)	Part marking (6)
ISO7142CCDBQ	Active	Production	SSOP (DBQ) | 16	75 | TUBE	Yes	NIPDAU	Level-2-260C-1 YEAR	-55 to 125	7142C
ISO7142CCDBQ.A	Active	Production	SSOP (DBQ) | 16	75 | TUBE	Yes	NIPDAU	Level-2-260C-1 YEAR	-55 to 125	7142C
ISO7142CCDBQR	Active	Production	SSOP (DBQ) | 16	2500 | LARGE T&R	Yes	NIPDAU	Level-2-260C-1 YEAR	-55 to 125	7142C
ISO7142CCDBQR.A	Active	Production	SSOP (DBQ) | 16	2500 | LARGE T&R	Yes	NIPDAU	Level-2-260C-1 YEAR	-55 to 125	7142C
ISO7142CCDBQRG4	Active	Production	SSOP (DBQ) | 16	2500 | LARGE T&R	Yes	NIPDAU	Level-2-260C-1 YEAR	-55 to 125	7142C
ISO7142CCDBQRG4.A	Active	Production	SSOP (DBQ) | 16	2500 | LARGE T&R	Yes	NIPDAU	Level-2-260C-1 YEAR	-55 to 125	7142C

(1) **Status:** For more details on status, see our product life cycle.

(2) **Material type:** When designated, preproduction parts are prototypes/experimental devices, and are not yet approved or released for full production. Testing and final process, including without limitation quality assurance, reliability performance testing, and/or process qualification, may not yet be complete, and this item is subject to further changes or possible discontinuation. If available for ordering, purchases will be subject to an additional waiver at checkout, and are intended for early internal evaluation purposes only. These items are sold without warranties of any kind.

(3) **RoHS values:** Yes, No, RoHS Exempt. See the TI RoHS Statement for additional information and value definition.

(4) **Lead finish/Ball material:** Parts may have multiple material finish options. Finish options are separated by a vertical ruled line. Lead finish/Ball material values may wrap to two lines if the finish value exceeds the maximum column width.

(5) **MSL rating/Peak reflow:** The moisture sensitivity level ratings and peak solder (reflow) temperatures. In the event that a part has multiple moisture sensitivity ratings, only the lowest level per JEDEC standards is shown. Refer to the shipping label for the actual reflow temperature that will be used to mount the part to the printed circuit board.

(6) **Part marking:** There may be an additional marking, which relates to the logo, the lot trace code information, or the environmental category of the part.

Multiple part markings will be inside parentheses. Only one part marking contained in parentheses and separated by a "~" will appear on a part. If a line is indented then it is a continuation of the previous line and the two combined represent the entire part marking for that device.

Important Information and Disclaimer: The information provided on this page represents TI's knowledge and belief as of the date that it is provided. TI bases its knowledge and belief on information provided by third parties, and makes no representation or warranty as to the accuracy of such information. Efforts are underway to better integrate information from third parties. TI has taken and continues to take reasonable steps to provide representative and accurate information but may not have conducted destructive testing or chemical analysis on incoming materials and chemicals. TI and TI suppliers consider certain information to be proprietary, and thus CAS numbers and other limited information may not be available for release.

In no event shall TI's liability arising out of such information exceed the total purchase price of the TI part(s) at issue in this document sold by TI to Customer on an annual basis.

OTHER QUALIFIED VERSIONS OF ISO7142CC :

- Automotive : ISO7142CC-Q1

NOTE: Qualified Version Definitions:

- Automotive - Q100 devices qualified for high-reliability automotive applications targeting zero defects

TAPE AND REEL INFORMATION

REEL DIMENSIONS

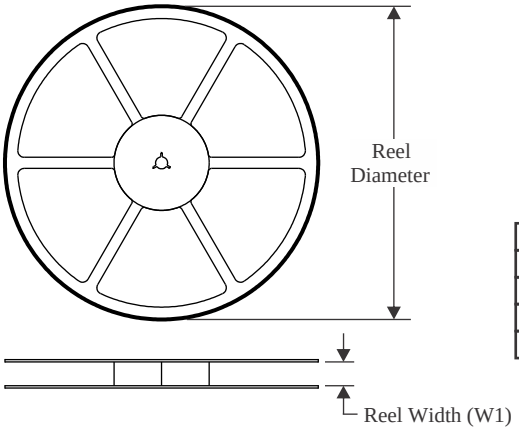

TAPE DIMENSIONS

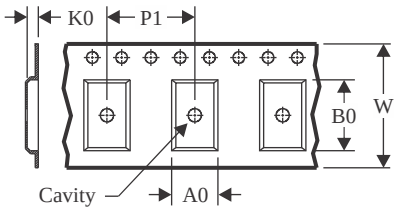

A0	Dimension designed to accommodate the component width
B0	Dimension designed to accommodate the component length
K0	Dimension designed to accommodate the component thickness
W	Overall width of the carrier tape
P1	Pitch between successive cavity centers

QUADRANT ASSIGNMENTS FOR PIN 1 ORIENTATION IN TAPE

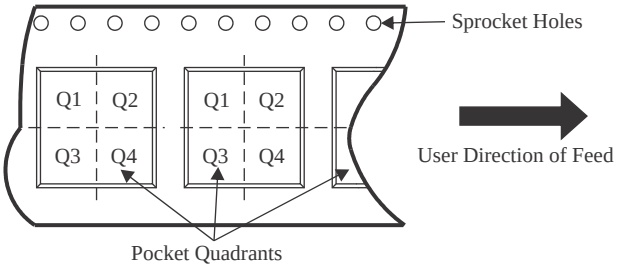

*All dimensions are nominal

Device	Package Type	Package Drawing	Pins	SPQ	Reel Diameter (mm)	Reel Width W1 (mm)	A0 (mm)	B0 (mm)	K0 (mm)	P1 (mm)	W (mm)	Pin1 Quadrant
ISO7142CCDBQR	SSOP	DBQ	16	2500	330.0	12.4	6.4	5.2	2.1	8.0	12.0	Q1
ISO7142CCDBQRG4	SSOP	DBQ	16	2500	330.0	12.4	6.4	5.2	2.1	8.0	12.0	Q1

TAPE AND REEL BOX DIMENSIONS

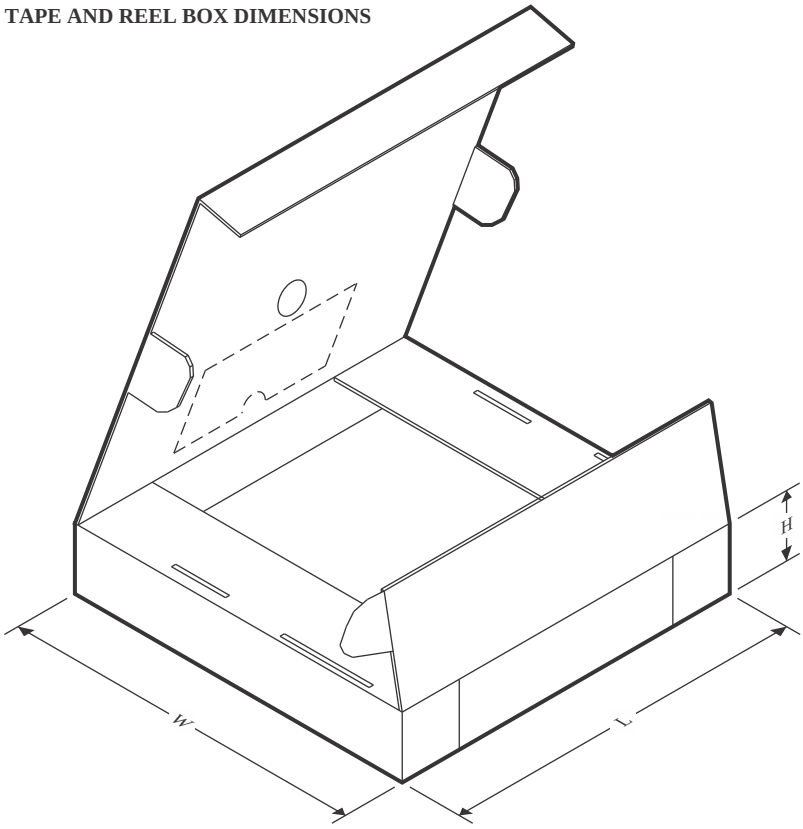

*All dimensions are nominal

Device	Package Type	Package Drawing	Pins	SPQ	Length (mm)	Width (mm)	Height (mm)
ISO7142CCDBQR	SSOP	DBQ	16	2500	350.0	350.0	43.0
ISO7142CCDBQRG4	SSOP	DBQ	16	2500	350.0	350.0	43.0

TUBE

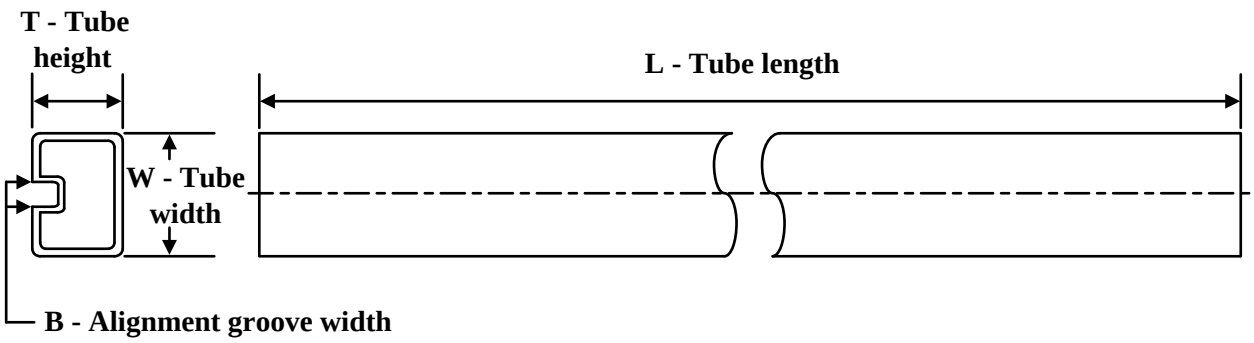

*All dimensions are nominal

Device	Package Name	Package Type	Pins	SPQ	L (mm)	W (mm)	T (µm)	B (mm)
ISO7142CCDBQ	DBQ	SSOP	16	75	506.6	8	3940	4.32
ISO7142CCDBQ	DBQ	SSOP	16	75	505.46	6.76	3810	4
ISO7142CCDBQ.A	DBQ	SSOP	16	75	505.46	6.76	3810	4
ISO7142CCDBQ.A	DBQ	SSOP	16	75	506.6	8	3940	4.32
ISO7142CCDBQR	DBQ	SSOP	16	2500	506.6	8	3940	4.32
ISO7142CCDBQR.A	DBQ	SSOP	16	2500	506.6	8	3940	4.32

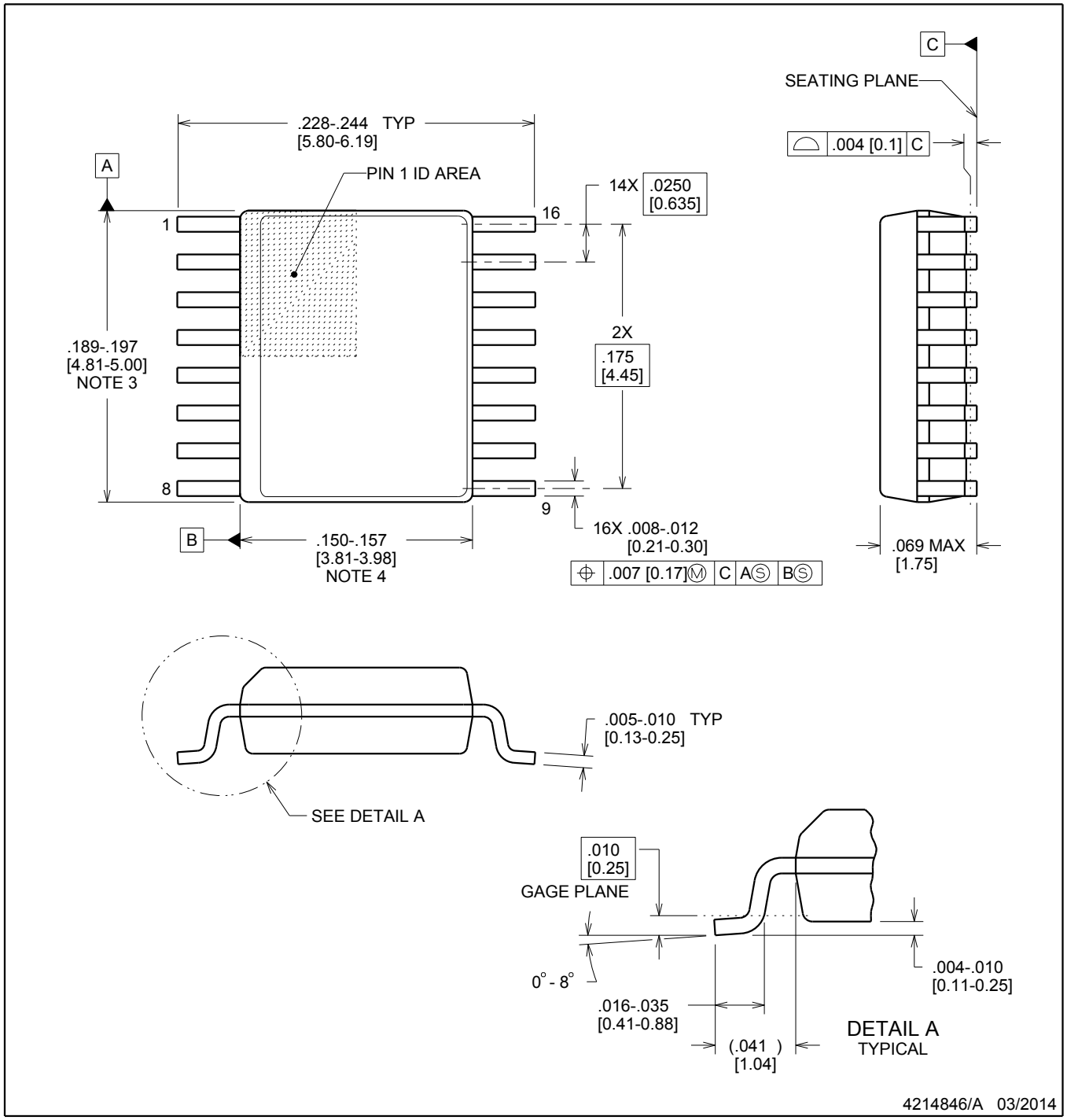

NOTES:

1. Linear dimensions are in inches [millimeters]. Dimensions in parenthesis are for reference only. Controlling dimensions are in inches. Dimensioning and tolerancing per ASME Y14.5M.
2. This drawing is subject to change without notice.
3. This dimension does not include mold flash, protrusions, or gate burrs. Mold flash, protrusions, or gate burrs shall not exceed .006 inch, per side.
4. This dimension does not include interlead flash.
5. Reference JEDEC registration MO-137, variation AB.

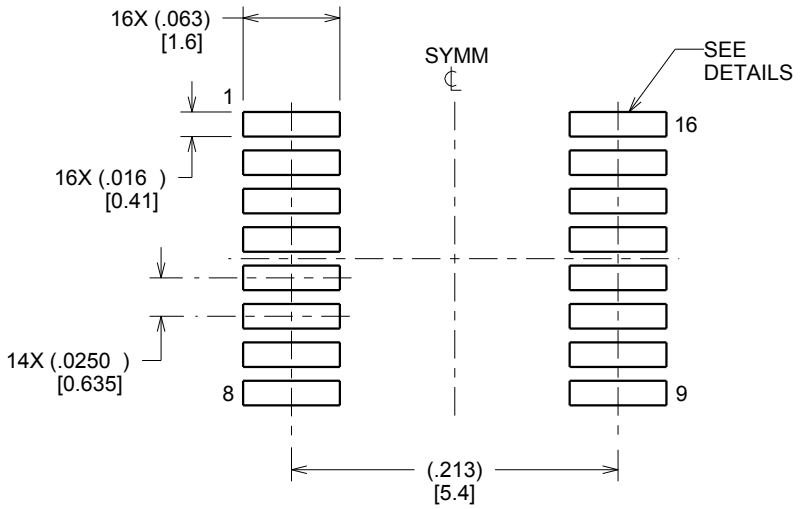

LAND PATTERN EXAMPLE
SCALE:8X

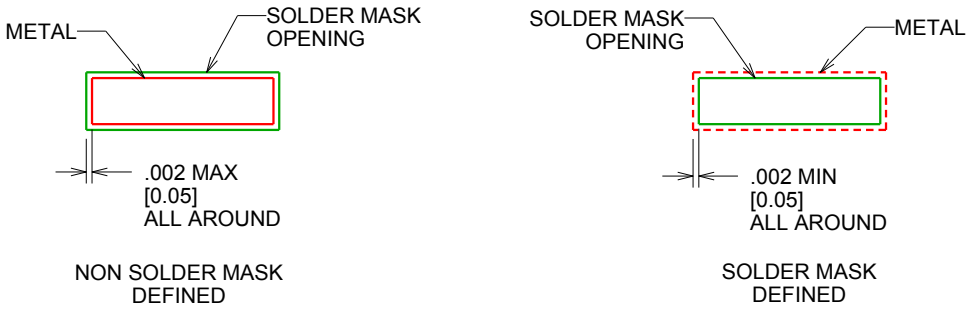

SOLDER MASK DETAILS

4214846/A 03/2014

NOTES: (continued)

6. Publication IPC-7351 may have alternate designs.
7. Solder mask tolerances between and around signal pads can vary based on board fabrication site.

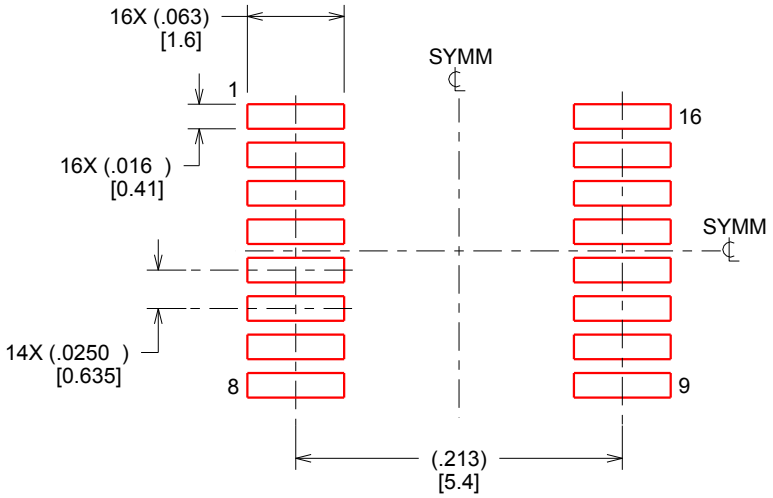

SOLDER PASTE EXAMPLE
BASED ON .005 INCH [0.127 MM] THICK STENCIL
SCALE:8X

4214846/A 03/2014

NOTES: (continued)

8. Laser cutting apertures with trapezoidal walls and rounded corners may offer better paste release. IPC-7525 may have alternate design recommendations.
9. Board assembly site may have different recommendations for stencil design.

重要通知和免责声明

TI“按原样”提供技术和可靠性数据（包括数据表）、设计资源（包括参考设计）、应用或其他设计建议、网络工具、安全信息和其他资源，不保证没有瑕疵且不做出任何明示或暗示的担保，包括但不限于对适销性、与某特定用途的适用性或不侵犯任何第三方知识产权的暗示担保。

这些资源可供使用 TI 产品进行设计的熟练开发人员使用。您将自行承担以下全部责任：(1) 针对您的应用选择合适的 TI 产品，(2) 设计、验证并测试您的应用，(3) 确保您的应用满足相应标准以及任何其他安全、安保法规或其他要求。

这些资源如有变更，恕不另行通知。TI 授权您仅可将这些资源用于研发本资源所述的 TI 产品的相关应用。严禁以其他方式对这些资源进行复制或展示。您无权使用任何其他 TI 知识产权或任何第三方知识产权。对于因您对这些资源的使用而对 TI 及其代表造成的任何索赔、损害、成本、损失和债务，您将全额赔偿，TI 对此概不负责。

TI 提供的产品受 TI 销售条款)、TI 通用质量指南 或 ti.com 上其他适用条款或 TI 产品随附的其他适用条款的约束。TI 提供这些资源并不会扩展或以其他方式更改 TI 针对 TI 产品发布的适用的担保或担保免责声明。 除非德州仪器 (TI) 明确将某产品指定为定制产品或客户特定产品，否则其产品均为按确定价格收入目录的标准通用器件。

TI 反对并拒绝您可能提出的任何其他或不同的条款。

版权所有 © 2026，德州仪器 (TI) 公司

最后更新日期：2025 年 10 月