16-Bit Low-Power Stereo Audio ADC With Microphone Bias and Microphone Amplifier

FEATURES

- **Analog Front End:**
  - **Stereo Single End Input With MUX**
  - **Mono Differential Input**
  - **Stereo Programmable Gain Amplifier**
  - **Microphone Boost Amplifier and Bias**
- **Analog Performances Dynamic Range: 90 dB**
- **Power-Supply Voltage**
  - **1.71 V to 3.6 V for Digital I/O Section**
  - **1.71 V to 3.6 V for Digital Core Section**
  - **2.4 V to 3.6 V for Analog Section**
- **Low Power Dissipation:**
  - **13 mW in Record, 1.8/2.4 V, 48 kHz, Stereo**
  - **5.3 mW in Record, 1.8/2.4 V, 8 kHz, Mono**
  - **3.3 µW in All Power Down**
- **Sampling Frequency: 5 kHz to 50 kHz**
- **Auto Level Control for Recording**
- **Operation by Single Clock Input Without PLL**
- **System Clock: Common Audio Clock ($256\ f_S/384\ f_S$), 12/24, 13/26, 13.5/27, 19.2/38.4, 19.68/39.36 MHz**
- **2 (I^2C) or 3 (SPI) Wire Serial Control**
- **Programmable Function by Register Control:**
  - **Digital Soft Mute**
  - **Power Up/Down Control for Each Module**
  - **30-dB to –12-dB Gain for Analog Inputs**
  - **0/12/20-dB Boost for Microphone Input**
  - **Parameter Settings for ALC**
  - **Three-Band Tone Control and 3D Sound**
  - **High-Pass Filter and Two-Stage Notch Filter**
- **Pop Noise Reduction Circuit**
- **Package:**
  - **24-QFN (4 mm × 5 mm)**
  - **24-DSBGA (2.49 mm × 3.49 mm)**
- **Operation Temperature Range: –40°C to 85°C**

APPLICATIONS

- **Portable Audio Player, Cellular Phone**
- **Video Camcorder, Movie Digital Still Camera**
- **PMP/DMB, Voice Recorder**

DESCRIPTION

The PCM1870 is a low-power stereo ADC designed for portable digital audio applications, with line-input amplifier, boost amplifier, microphone bias, programmable gain control, sound effects, and auto level control (ALC). It is available in 24-QFN (4-mm × 5-mm) and 24-DSBGA (2.49-mm × 3.49-mm) packages to save footprint. The PCM1870 accepts right-justified, left-justified, I^2S, and DSP formats, providing easy interfacing to audio DSP and encoder chips. Sampling rates up to 50 kHz are supported. The user-programmable functions are accessible through a 2- or 3-wire serial control port.

Please be aware that an important notice concerning availability, standard warranty, and use in critical applications of Texas Instruments semiconductor products and disclaimers thereto appears at the end of this data sheet.

PRODUCTION DATA information is current as of publication date. Products conform to specifications per the terms of the Texas Instruments standard warranty. Production processing does not necessarily include testing of all parameters.

Copyright © 2007, Texas Instruments Incorporated

This integrated circuit can be damaged by ESD. Texas Instruments recommends that all integrated circuits be handled with appropriate precautions. Failure to observe proper handling and installation procedures can cause damage.

ESD damage can range from subtle performance degradation to complete device failure. Precision integrated circuits may be more susceptible to damage because very small parametric changes could cause the device not to meet its published specifications.

ABSOLUTE MAXIMUM RATINGS

over operating free-air temperature range (unless otherwise noted)[1]

		PCM1870	UNIT
V_{DD}, V_{IO}, V_{CC}	Supply voltage	–0.3 to 4	V
	Ground voltage differences: DGND, AGND, PGND	±0.1	V
	Input voltage	–0.3 to 4	V
	Input current (any pins except supplies)	±10	mA
	Ambient temperature under bias	–40 to 110	°C
	Storage temperature	–55 to 150	°C
	Junction temperature	150	°C
	Lead temperature (soldering)	260 / 5	°C / s
	Package temperature (reflow, peak)	260	°C

(1) Stresses beyond those listed under *absolute maximum ratings* may cause permanent damage to the device. These are stress ratings only, and functional operation of the device at these or any other conditions beyond those indicted under *recommended operating conditions* is not impled. Exposure to absolute-maximum-rated conditions for extended periods may affect device reliabiltiy.

RECOMMENDED OPERATING CONDITIONS

			MIN	NOM	MAX	UNIT
V_{CC}	Analog supply voltage		2.4	3.3	3.6	V
V_{DD}, V_{IO}	Digital supply voltage		1.71	3.3	3.6	V
	Digital input logic family			CMOS		
	Digital input clock frequency	SCKI system clock	3.072		18.432	MHz
		LRCK sampling clock	8		48	kHz
	Digital output load capacitance				10	pF
T_A	Operating free-air temperature		–40		85	°C

Copyright © 2007, Texas Instruments Incorporated

ELECTRICAL CHARACTERISTICS

All specifications at T_A = 25°C, V_{DD} = V_{IO} = V_{CC} = V_{PA} = 3.3 V, f_S = 48 kHz, system clock = 256 f_S, and 16-bit data, unless otherwise noted

PARAMETER		TEST CONDITIONS	PCM1870RHF, PCM1870YZF			UNIT
			MIN	TYP	MAX	
AUDIO DATA						
Data Format						
	Resolution			16		Bits
	Audio data interface format			I^2S, left-, right-justified, DSP		
	Audio data bit length			16		Bits
	Audio data format			MSB-first, 2s-complement		
f_S	Sampling frequency		5		50	kHz
	System clock	V_{DD} < 2 V			27	MHz
		V_{DD} > 2 V			40	
DIGITAL INPUT/OUTPUT						
	Logic family			CMOS compatible		
V_{IH}	Input logic level		0.7 V_{IO}			VDC
V_{IL}					0.3 V_{IO}	
I_{IH}	Input logic current	V_{IN} = 3.3 V			10	µA
I_{IL}		V_{IN} = 0 V			–10	
V_{OH}	Output logic level	I_{OH} = –2 mA	0.75 V_{IO}			VDC
V_{OL}		I_{OL} = 2 mA			0.25 V_{IO}	
LINE INPUT TO DIGITAL OUTPUT THROUGH ADC (AIN1L/R, AIN2L/R AND PGINL/R—ALC = OFF, PG1 = PG2 = PG3 = PG4 = 0 dB						
Dynamic Performance						
	Full-scale input voltage	0 dB		2.828		Vp-p
				1		Vrms
	Dynamic range	EIAJ, A-weighted		90		dB
SNR	Signal-to-noise ratio	EIAJ, A-weighted	83	90		dB
	Channel separation			87		dB
THD+N	Total harmonic distortion + noise	–1 dB		0.009%	0.017%	
Analog Input						
	Center voltage			0.5 V_{CC}		V
	Input impedance	AIN1L, AIN1R, AIN2L, and AIN2R	10	20		kΩ
		PGINL and PGINR, PG3 = PG4 = –12 dB	70	142		
		PGINL and PGINR, PG3 = PG4 = 30 dB	4.7	9.5		
ANALOG OUTPUTS (AOL AND AOR)						
	Center voltage			0.5 V_{CC}		V
	Load resistance		10			kΩ
	Load capacitance				20	pF
MICROPHONE BIAS—ALC = OFF, PG1 = PG2 = PG3 = PG4 = 0 dB						
	Bias voltage			0.75 V_{CC}		V
	Bias source current			2		mA
	Output noise			6.5		µV

Copyright © 2007, Texas Instruments Incorporated

ELECTRICAL CHARACTERISTICS (continued)

All specifications at T_A = 25°C, V_{DD} = V_{IO} = V_{CC} = V_{PA} = 3.3 V, f_S = 48 kHz, system clock = 256 f_S, and 16-bit data, unless otherwise noted

PARAMETER		TEST CONDITIONS	PCM1870RHF, PCM1870YZF			UNIT
			MIN	TYP	MAX	
FILTER CHARACTERISTICS						
Decimation Filter for ADC						
	Pass band				0.408 f_S	
	Stop band		0.591 f_S			
	Pass-band ripple				±0.02	dB
	Stop-band attenuation	f < 3.268 f_S	–60			dB
	Group delay			17/f_S		s
High-Pass Filter for ADC						
	Frequency response (f_c = 4 Hz)	–3 dB		3.74		Hz
		–0.5 dB		10.66		
		–0.1 dB		24.20		
	Frequency response (f_c = 120 Hz)	–3 dB		118.77		Hz
		–0.5 dB		321.75		
		–0.1 dB		605.52		
	Frequency response (f_c = 240 Hz)	–3 dB		235.68		Hz
		–0.5 dB		609.95		
		–0.1 dB		2601.2		
POWER SUPPLY AND SUPPLY CURRENT						
V_{IO}	Voltage range	V_{IO}	1.71	3.3	3.6	VDC
V_{DD}		V_{DD}	1.71	3.3	3.6	
V_{CC}		V_{CC}	2.4	3.3	3.6	
	Supply current	BPZ input, all active, no load		8	12	mA
		All inputs are held static.		1	10	µA
	Power dissipation	BPZ input		26.4	39.6	mW
		All inputs are held static.		3.3	33	µW
TEMPERATURE CONDITION						
	Operation temperature		–40		85	°C
θ_{JA}	Thermal resistance			35		°C/W

Copyright © 2007, Texas Instruments Incorporated

PIN ASSIGNMENTS

RHF Package (Top View)

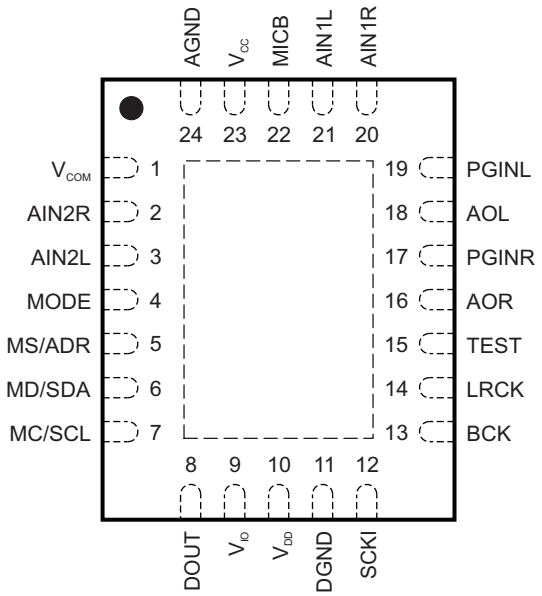

YZF Package (Top View)

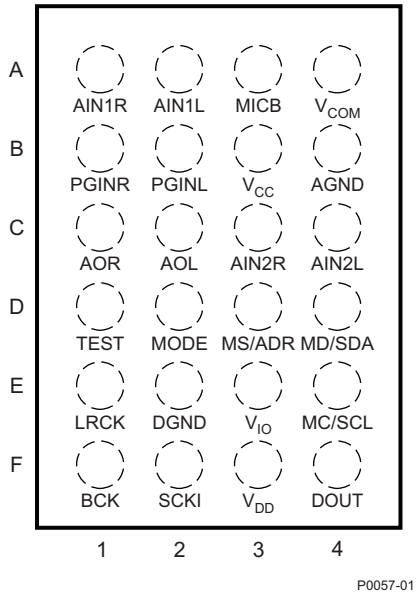

Table 1. TERMINAL FUNCTIONS

TERMINAL			I/O	DESCRIPTION
NAME	NO.			
	RHF	YZF		
AGND	24	B4	–	Ground for analog
AIN1L	21	A2	I	Analog input 1 for L-channel
AIN1R	20	A1	I	Analog input 1 for R-channel
AIN2L	3	C4	I	Analog input 2 for L-channel
AIN2R	2	C3	I	Analog input 2 for R-channel
AOL	18	C2	O	Microphone amplifier output for L-channel
AOR	16	C1	O	Microphone amplifier output for R-channel
BCK	13	F1	I/O	Serial bit clock
DGND	11	E2	–	Ground for digital
DOUT	8	F4	O	Serial audio data output
LRCK	14	E1	I/O	Left- and right-channel clock
MC/SCL	7	E4	I	Mode control clock for 3-wire / 2-wire interface
MD/SDA	6	D4	I/O	Mode control data for 3-wire / 2-wire interface
MICB	22	A3	O	Microphone bias source output
MODE	4	D2	I	2- or 3-wire interface selection (LOW: SPI, HIGH: I^2C)
MS/ADR	5	D3	I	Mode control select for 3-wire / 2-wire interface
PGINL	19	B2	I	Analog input to gain amplifier for L-channel
PGINR	17	B1	I	Analog input to gain amplifier for R-channel
SCKI	12	F2	I	System clock
TEST	15	D1	I	Test Pin. Should be connected to ground.
V_{CC}	23	B3	–	Power supply for analog
V_{COM}	1	A4	–	Common voltage for analog
V_{DD}	10	F3	–	Power supply for digital core
V_{IO}	9	E3	–	Power supply for digital I/O

Copyright © 2007, Texas Instruments Incorporated

FUNCTIONAL BLOCK DIAGRAM

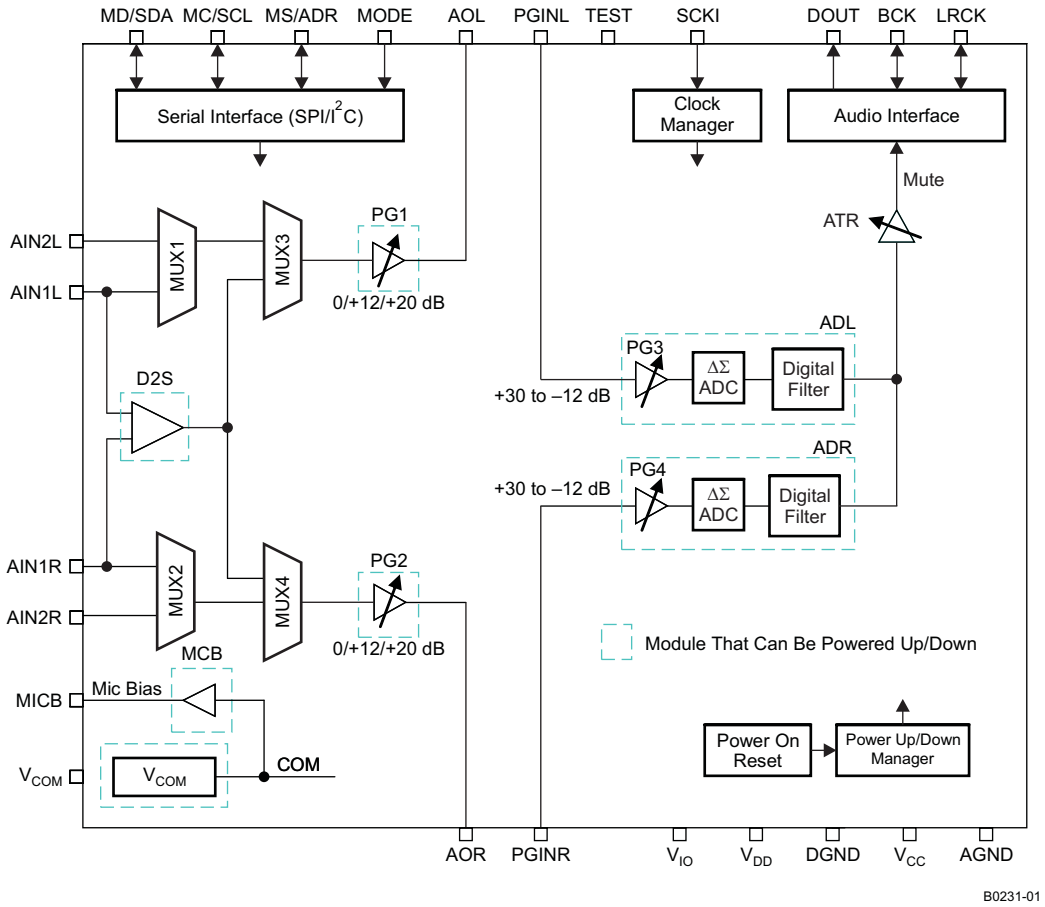

Copyright © 2007, Texas Instruments Incorporated

TYPICAL PERFORMANCE CURVES

All specifications at T_A = 25°C, V_{DD} = V_{IO} = V_{CC} = V_{PA} = 3.3 V, f_S = 8 kHz to 48 kHz, system clock = 256 f_S and 16-bit data, unless otherwise noted.

DECIMATION FILTER, STOP-BAND

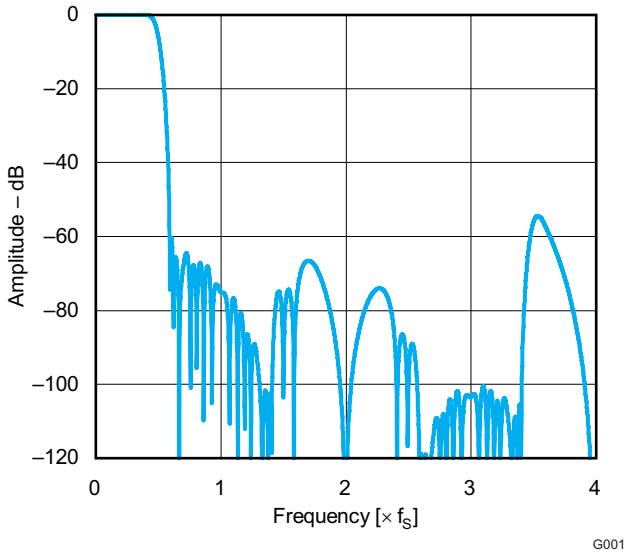

Figure 1.

DECIMATION FILTER, PASS-BAND

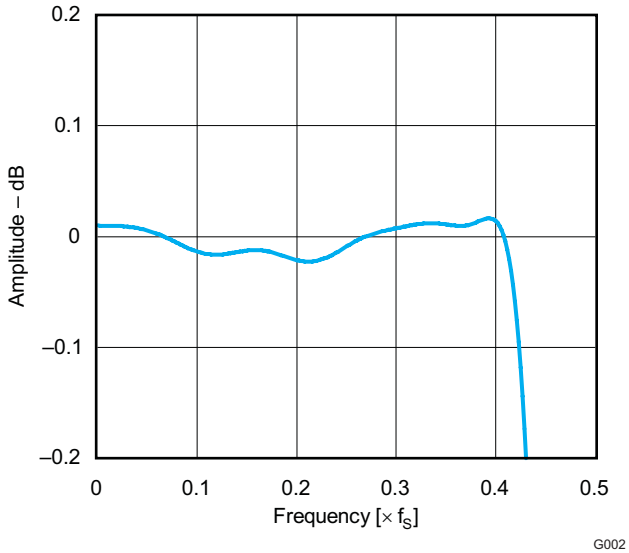

Figure 2.

HIGH-PASS FILTER PASS-BAND CHARACTERISTICS (f_C = 4 Hz at 48 kHz)

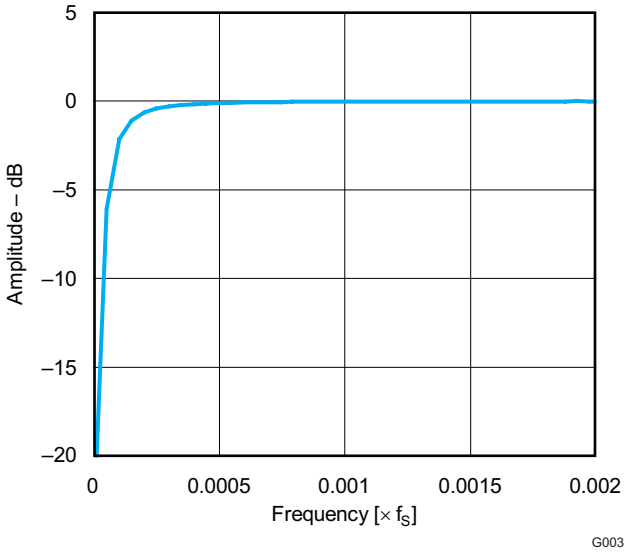

Figure 3.

HIGH-PASS FILTER PASS-BAND CHARACTERISTICS (f_C = 120 Hz at 48 kHz)

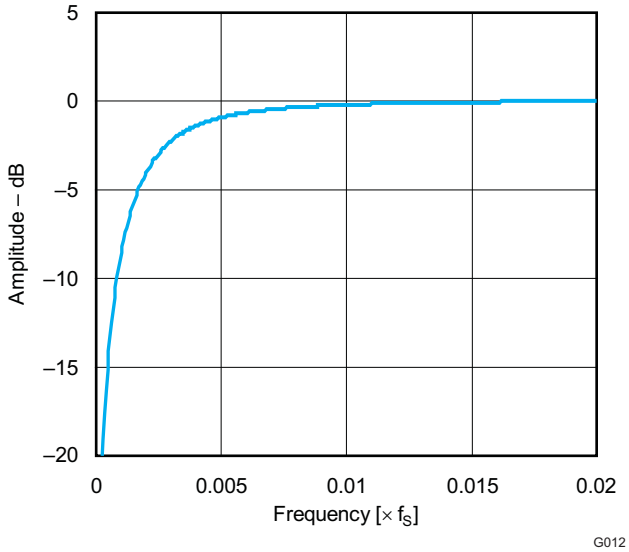

Figure 4.

Copyright © 2007, Texas Instruments Incorporated

TYPICAL PERFORMANCE CURVES (continued)

All specifications at T_A = 25°C, V_{DD} = V_{IO} = V_{CC} = V_{PA} = 3.3 V, f_S = 8 kHz to 48 kHz, system clock = 256 f_S and 16-bit data, unless otherwise noted.

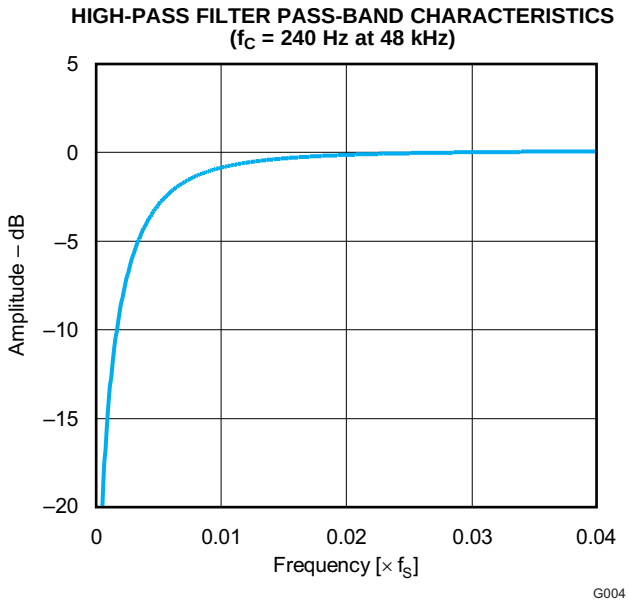

Figure 5.

Copyright © 2007, Texas Instruments Incorporated

TYPICAL PERFORMANCE CURVES (continued)

All specifications at T_A = 25°C, V_{DD} = V_{IO} = V_{CC} = V_{PA} = 3.3 V, f_S = 44.1 kHz, system clock = 256 f_S and 16-bit data, unless otherwise noted.

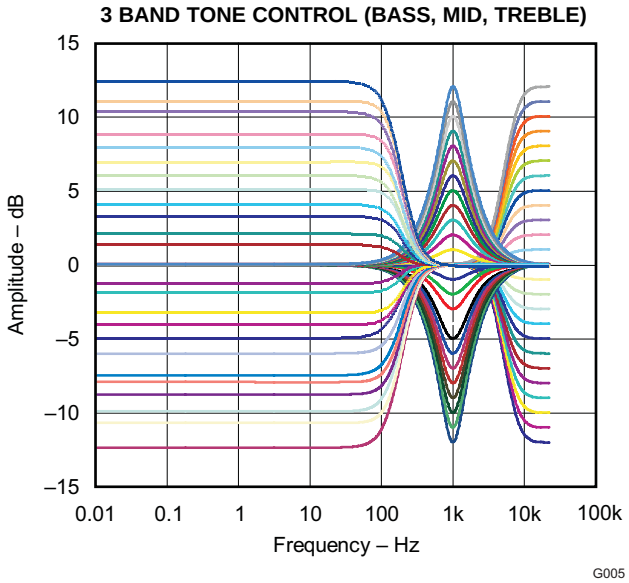

Figure 6.

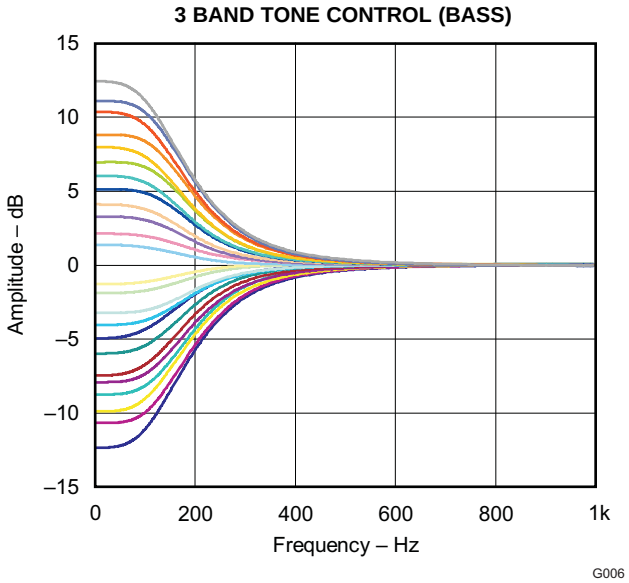

Figure 7.

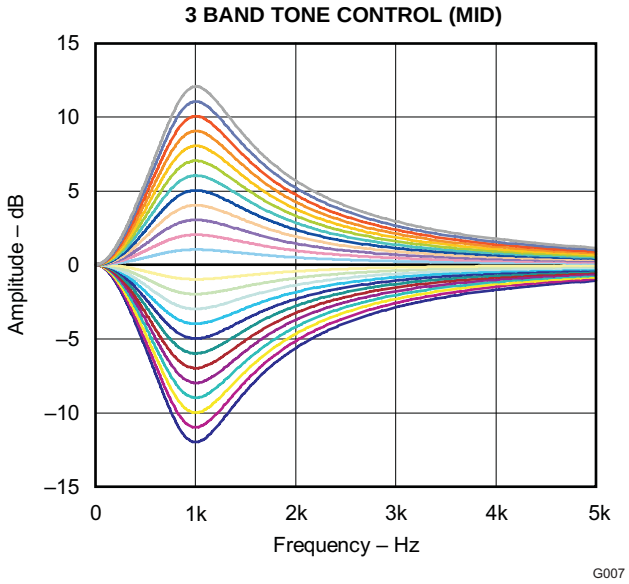

Figure 8.

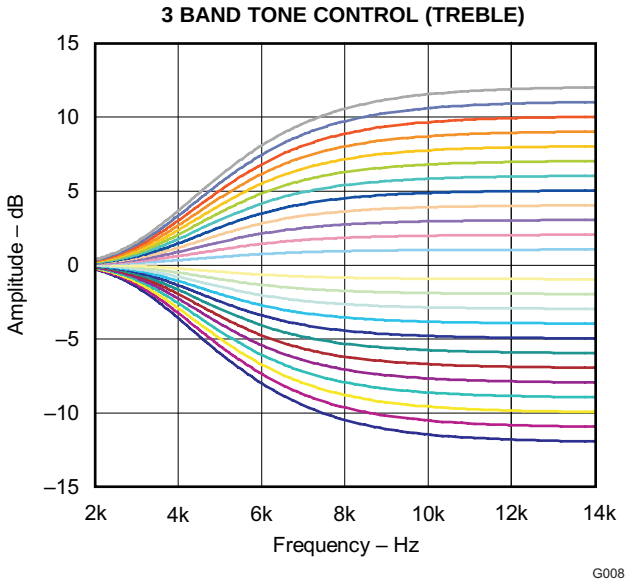

Figure 9.

TYPICAL PERFORMANCE CURVES (continued)

All specifications at T_A = 25°C, V_{DD} = V_{IO} = V_{CC} = V_{PA} = 3.3 V, f_S = 48 kHz, system clock = 256 f_S and 16-bit data, unless otherwise noted.

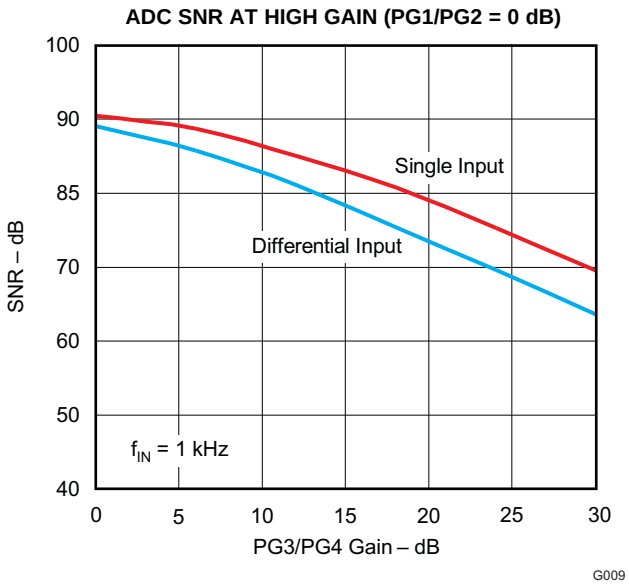

Figure 10.

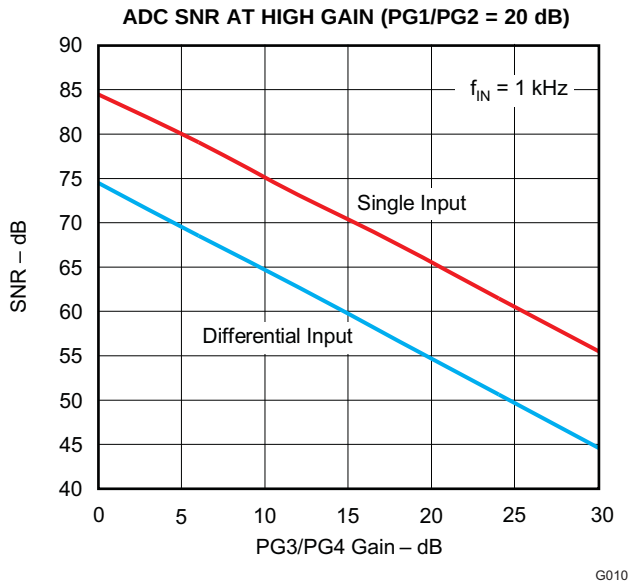

Figure 11.

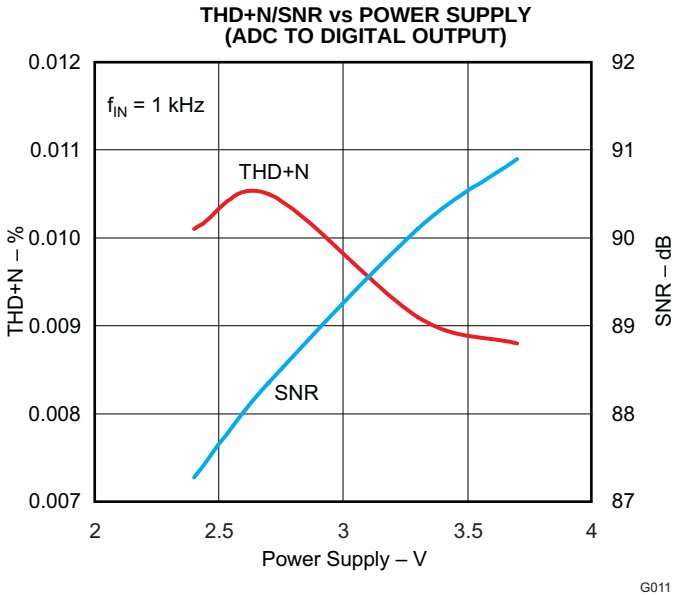

Figure 12.

Copyright © 2007, Texas Instruments Incorporated

PCM1870 DESCRIPTION

Analog Input

The AIN1L, AIN1R, AIN2L and AIN2R pins can be used as microphone or line inputs with selectable 0- or 20-dB boost and 1-Vrms input. All analog inputs have high input impedance (20 kΩ), which is not changed by gain settings. One pair of inputs is selected by register 87 (AIL[1:0], AIR[1:0]). AIN1L and AIN1R can also be used as a monaural differential input.

Gain Setting for Analog Input

Analog signals can be adjusted from 30 dB to –12 dB in 1-dB steps after the 0-, 12- or 20-dB boost amplifier. Gain level can be set for each channel by register 79, 80 (ALV[5:0], ARV[5:0]).

A/D Converter

The ADC includes a multilevel delta-sigma modulator, aliasing filter, decimation filter, high-pass filter and notch filter and can accept 1 Vrms as full-scale input voltage. The decimation filter has a digital soft mute controlled by register 81 (RMUL, RMUR), and the high-pass and notch filters can be disabled by register 81 (HPF[1:0]) and registers 96 through 104 if they are not needed to cancel dc offset or avoid wind noise.

Common Voltage

Unbuffered common voltage. The V_{COM} pin is normally biased to 0.5 V_{CC}, and it provides common voltage to internal circuitry. Connecting a 4.7-µF capacitor to this pin is recommended to optimize analog performance.

Microphone Bias

The MICB pin is a microphone bias source for an external microphone, which can provide 2 mA (typ) bias current.

Auto Level Control (ALC) for Recording

The sound when microphone recording should be adjusted to a suitable level without saturation. The digitally controlled auto level control (ALC) automatically expands small input signals and compresses large input signals while recording. Expansion level, compression level, attack time, and recovery time can be selected by register 83. See the bit descriptions of register 83 for detailed settings.

3D Sound

A 3D sound effect is provided by mixing L-channel and R-channel data through a band-pass filter with two control parameters, mixing ratio and band-pass filter characteristic. The control parameters are set in register 95 (3DP[3:0], 3FLO). The 3D sound effect is applied to the ADC digital output.

3-Band Tone Control

Tone control has bass, midrange, and treble controls that can be adjusted from 12 dB to –12 dB in 1-dB steps by register 92 to 94 (LGA[4:0], MGA[4:0] and HGA[4:0]). Register 92 (LPAE), which attenuates the digital input signal automatically, can prevent clipping of the output signal at settings higher than 0 dB for bass control. LPAE is not effective for midrange and treble control.

High-Pass Filter and Notch Filter

The high-pass filter cuts dc offset in the analog section of the ADC and can be set to 4 Hz, 120 Hz, or 240 Hz at 48-kHz sampling by register 81 (HPF[1:0]).

Notch filters remove noise at particular frequencies, CCD noise, motor noise and other mechanical noise in an application. The PCM1870 has two notch filters, whose center frequency and frequency bandwidth can be programmed by registers 96 to 104.

Digital Monaural Mixing

The audio data can be mixed to monaural digital data from stereo digital data in the internal audio interface section by register 96 (MXEN).

Copyright © 2007, Texas Instruments Incorporated

Zero-Cross Detection

Zero-cross detection minimizes audible zipper noise while changing analog volume and digital attenuation. This function can be applied to digital input or digital output by register 86 (ZCRS).

Power Up/Down for Each Module

Using register 73 (PBIS), register 82 (PAIR, PAIL, PADS, PMCB, PADR, PADL), and register 90 (PCOM), unused modules can be powered down to minimize power consumption (13 mW when recording only).

Digital Interface

All digital I/O pins can interface at various power supply voltages. The V_{IO} pin can be connected to a 1.71-V to 3.6-V power supply.

Power Supply

The V_{CC} pin can be connected to 2.4 V to 3.6 V. The V_{DD} pin and V_{IO} pin can be connected to 1.71 to 3.6 V. A different voltage can be applied to each of these pins (for example, V_{DD} = 1.8 V, V_{IO} = 3.3 V).

Copyright © 2007, Texas Instruments Incorporated

DESCRIPTION OF OPERATION

System Clock Input

The PCM1870 can accept input clocks of various frequencies without a PLL. The clocks are used for clocking of the digital filters, auto level control, and delta-sigma modulators, and classified into common-audio and application-specific clocks. Table 2 shows frequencies of the common audio clock and the application-specific clock. Figure 13 shows timing requirements for system clock inputs. The sampling rate and frequency of the system clock are determined by settings in register 86 (MSR[2:0]) and register 85 (NPR[5:0]). Note that the sampling rate of the application-specific clock has a little sampling error. The details are shown in Table 8.

Table 2. Frequency of Common Audio Clock

	FREQUENCY
Common audio clock	11.2896, 12.288, 16.9344, 18.432 MHz
Application-specific clock	12, 13, 13.5, 24, 26, 27, 19.2, 19.68, 38.4, 39.36 MHz

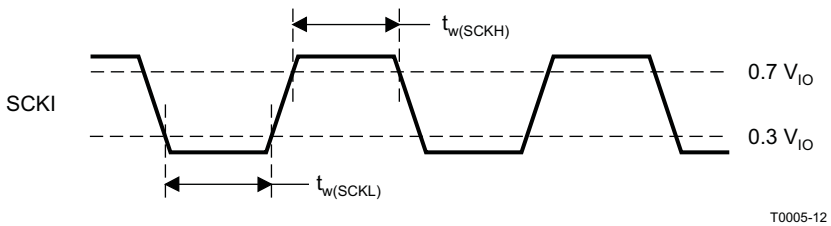

PARAMETERS	SYMBOL	MIN	UNIT
System clock pulse duration, high	$t_{w(SCKH)}$	14	ns
System clock pulse duration, low	$t_{w(SCKL)}$	14	ns

Figure 13. System Clock Timing

Power-On Reset and System Reset

The power-on-reset circuit outputs reset signal, typically at V_{DD} = 1.2 V, and this circuit does not depend on the voltage of other power-supplies (V_{CC}, V_{PA}, and V_{IO}). Internal circuits are cleared to default status, then signals are removed from all analog and digital outputs. The PCM1870 does not require any power supply sequencing. Register data must be written after turning all power supplies on.

System reset is enabled by setting register 85 (SRST), and all registers are cleared automatically. All circuits are reset to their default status at once. Note that the PCM1870 has audible pop noise on the analog outputs when enabling SRST.

Power On/Off Sequence

To reduce audible pop noise, a sequence of register settings is required after turning all power supplies on when powering up, or before turning the power supplies off when powering down. If some modules are not required for a particular application or operation, they should be placed in the power-down state after performing the power-on sequence. The recommended power-on and power-off sequences are shown in Table 3 and Table 4, respectively.

Copyright © 2007, Texas Instruments Incorporated

Table 3. Recommended Power-On Sequence

STEP	REGISTER SETTINGS	NOTE
1	—	Turn ON all power supplies (1)
2	5102_H	ADC audio interface format (left-justified) (2)
3	$5A00_H$	PG1, PG2 gain control (0 dB)
4	4980_H	Analog bias power up
5	5601_H	Zero-cross detection enable
6	$4A01_H$	V_{COM} power up
7	$523F_H$	Analog front end (ADL, ADR, D2S, MCB, PG1, 2, 5, 6) power up
8	5711_H	Analog input (MUX3, MUX4) select. Analog input (MUX1, MUX2) select
9	$4F0C_H$	Analog input L-ch (PG3) volume (0 dB) (3)
10	$500C_H$	Analog input R-ch (PG4) volume (0 dB) (3)

(1) V_{DD} should be turned on first or at the same time with other power supplies. It is recommended to set the register data after turning on all power supplies and while the system clock is running.
(2) The audio interface format should be set to match the DSP or decoder being used.
(3) Any level is acceptable for volume or attenuation. The level should return to that recorded in the register data when system was last powered off.

Table 4. Recommended Power-Off Sequence

STEP	REGISTER SETTINGS	NOTE
1	5132_H	ADC L-ch/R-ch digital soft mute enable, ADC audio interface format (left-justified) (1)
2	5200_H	Analog front end (ADL, ADR, D2S, MCB, PG1, 2, 5, 6) power down
3	$4A00_H$	V_{COM} power down
4	4900_H	Analog bias power down
5	—	Turn OFF all power supplies. (2)

(1) The audio interface format should be set to match the DSP or decoder being used.
(2) Power-supply sequencing is not required. It is recommended to make the required register settings while the system clock is running, then turn off all power supplies.

Copyright © 2007, Texas Instruments Incorporated

Power-Supply Current

The current consumption of the PCM1870 depends on the power-up/down status of each circuit module. In order to save power consumption, disabling each module is recommended when it is not used in an appliction or operation. Table 5 shows current consumtption in some states.

Table 5. Power Consumption Table

OPERATION MODE	POWER SUPPLY CURRENT [mA]				PD [mW]	
	V_{DD} (1.8 V)	V_{DD} (3.3 V)	V_{CC} (3.3 V)	V_{IO} (3.3 V)	TOTAL (V_{DD} = 1.8 V)	TOTAL (V_{DD} = 3.3 V)
ALL POWER DOWN	0.000	0.000	0.001	0.000	0.003	0.003
Recording (f_S = 48 kHz)						
Line input (AIN2L/AIN2R)	1.78	3.71	4.58	0.10	18.3	27.7
Mic input (AIN1L/AIN1R, 20 dB)	1.79	3.71	5.06	0.10	19.9	29.3
Mic input (AIN1L/AIN1R, 20 dB) with ALC	2.73	5.59	5.06	0.10	21.6	35.5
Mono mic input (AIN1L, 20 dB)	1.33	2.80	3.56	0.10	14.1	21.3
Mono mic input (AIN1L, 20 dB) with ALC	2.21	4.60	3.56	0.10	15.7	27.3
Mono diff mic input (AIN1L/AIN1R, 20 dB)	1.33	2.80	3.88	0.10	15.2	22.4
Mono diff mic input (AIN1L/AIN1R, 20 dB) with ALC	2.21	4.60	3.88	0.10	16.8	28.3
Recording (f_S = 22.05 kHz)						
Line input (AIN2L/AIN2R)	0.82	1.66	3.71	0.10	13.7	18.1
Mic input (AIN1L/AIN1R, 20 dB)	0.82	1.66	4.20	0.10	15.3	19.7
Mic input (AIN1L/AIN1R, 20 dB) with ALC	1.26	2.55	4.20	0.10	16.1	22.6
Mono mic input (AIN1L, 20 dB)	0.61	1.23	2.74	0.10	10.1	13.4
Mono mic input (AIN1L, 20 dB) with ALC	1.03	2.10	2.74	0.10	10.9	1.63
Mono diff mic input (AIN1L/AIN1R, 20 dB)	0.61	1.23	3.06	0.10	11.2	14.5
Mono diff mic input (AIN1L/AIN1R, 20 dB) with ALC	1.02	2.08	3.06	0.10	11.9	17.3
Recording (f_S = 16 kHz)						
Line input (AIN2L/AIN2R)	0.59	1.18	3.51	0.10	12.7	15.8
Mic input (AIN1L/AIN1R, 20 dB)	0.59	1.18	3.99	0.10	14.2	17.4
Mic input (AIN1L/AIN1R, 20 dB) with ALC	0.91	1.85	3.99	0.10	14.8	19.6
Mono mic input (AIN1L, 20 dB)	0.44	0.87	2.55	0.10	9.2	11.6
Mono mic input (AIN1L, 20 dB) with ALC	0.75	1.52	2.55	0.10	9.8	13.8
Mono diff mic input (AIN1L/AIN1R, 20 dB)	0.44	0.87	2.87	0.10	10.3	12.7
Mono diff mic input (AIN1L/AIN1R, 20 dB) with ALC	0.74	1.50	2.87	0.10	10.8	14.8
Recording (f_S = 8 kHz)						
Line input (AIN2L/AIN2R)	0.29	0.54	3.23	0.10	11.2	12.8
Mic input (AIN1L/AIN1R, 20 dB)	0.29	0.54	3.72	0.10	12.8	14.4
Mic input (AIN1L/AIN1R, 20 dB) with ALC	0.46	0.88	3.72	0.10	13.1	15.5
Mono mic input (AIN1L, 20 dB)	0.22	0.39	2.29	0.10	8.0	9.2
Mono mic input (AIN1L, 20 dB) with ALC	0.37	0.70	2.29	0.10	8.2	10.2
Mono diff mic input (AIN1L/AIN1R, 20 dB)	0.22	0.39	2.61	0.10	9.0	10.2
Mono diff mic input (AIN1L/AIN1R, 20 dB) with ALC)	0.37	0.70	2.61	0.10	9.3	11.3
Condition: 256 f_S, 16 bits, slave mode, zero data input, no load						

Copyright © 2007, Texas Instruments Incorporated

Audio Serial Interface

The audio serial interface of the PCM1870 consists of LRCK, BCK and DOUT. Sampling rate (f_S), left and right channel are present on LRCK. DOUT transmits the serial data from the decimation filter for the ADC. BCK is used to transmit the serial audio data on DOUT at its high-to-low transition. BCK and LRCK should be synchronized with audio system clock. Ideally, it is recommended that they are derived from it.

The PCM1870 requires LRCK to be synchronized with the system clock. The PCM1870 do not need a specific phase relationship between LRCK and the system clock.

The PCM1870 has both master mode and slave mode interface formats, which can be selected by register 84 (MSTR). LRCK and BCK are generated from the system clock in master mode.

Audio Data Formats and Timing

The PCM1870 supports I^2S, right-justified, left-justified, and DSP formats. The data formats are shown in Figure 16, and they are selected using resister 70 (RFM[1:0], PFM[1:0]). All formats require binary 2s-complement, MSB-first audio data. The default format is I^2S. Figure 14 shows a detailed timing diagram.

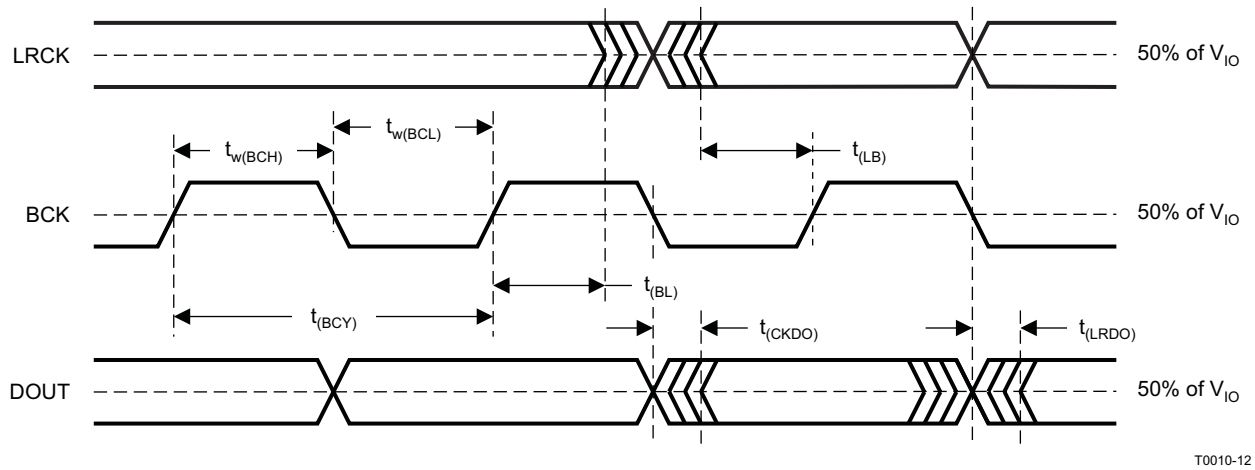

PARAMETERS	SYMBOL	MIN	MAX	UNIT
BCK pulse cycle time (I^2S, left- and right-justified formats)	$t_{(BCY)}$	$1/(64f_S)$ (1)		
BCK pulse cycle time (DSP format)	$t_{(BCY)}$	$1/(256f_S)$ (1)		
BCK high-level time	$t_{w(BCH)}$	35		ns
BCK low-level time	$t_{w(BCL)}$	35		ns
BCK rising edge to LRCK edge	$t_{(BL)}$	10		ns
LRCK edge to BCK rising edge	$t_{(LB)}$	10		ns
DOUT delay time from BCK falling edge	$t_{(CKDO)}$		40	ns

(1) f_S is the sampling frequency.

Figure 14. Audio Interface Timing (Slave Mode)

Copyright © 2007, Texas Instruments Incorporated

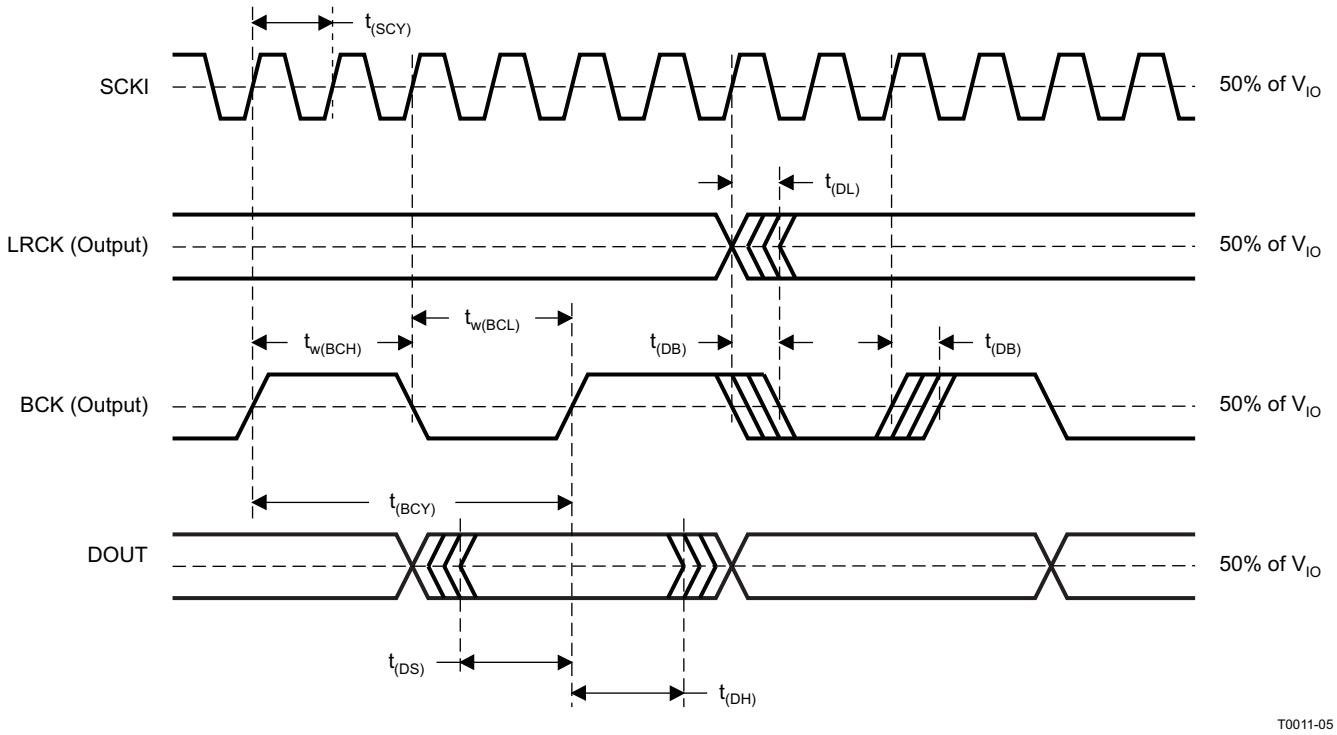

PARAMETERS	SYMBOL	MIN	MAX	UNIT
SCKI pulse cycle time	$t_{(SCY)}$	$1/(256f_S)$ (1)		
LRCK edge from SCKI rising edge	$t_{(DL)}$	5	140	ns
BCK edge from SCKI rising edge	$t_{(DB)}$	5	140	ns
BCK pulse cycle time	$t_{(BCY)}$	$1/(64f_S)$ (1)		
BCK high-level time	$t_{w(BCH)}$	146		ns
BCK low-level time	$t_{w(BCL)}$	146		ns
DOUT setup time	$t_{(DS)}$	10		ns
DOUT hold time	$t_{(DH)}$	10		ns

(1) f_S is up to 48 kHz. f_S is the sampling frequency

Figure 15. Audio Interface Timing (Master Mode)

(a) Right-Justified Data Format; L-Channel = HIGH, R-Channel = LOW

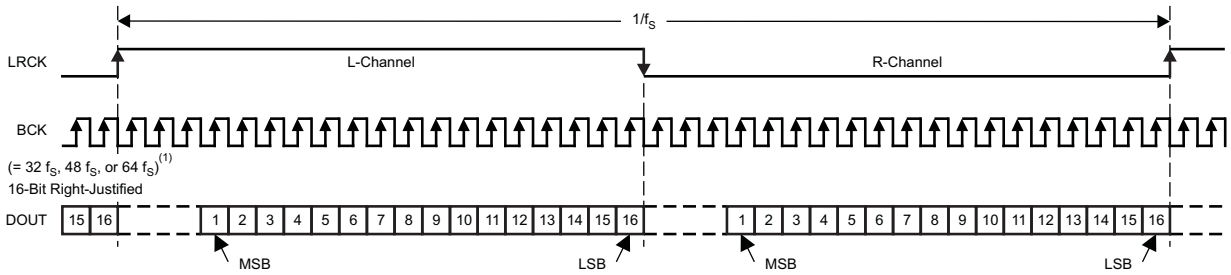

(b) I²S Data Format; L-Channel = LOW, R-Channel = HIGH

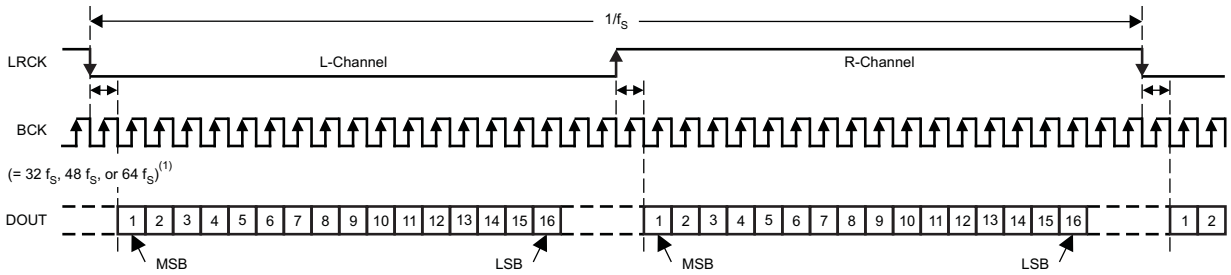

(c) Left-Justified Data Format; L-Channel = HIGH, R-Channel = LOW

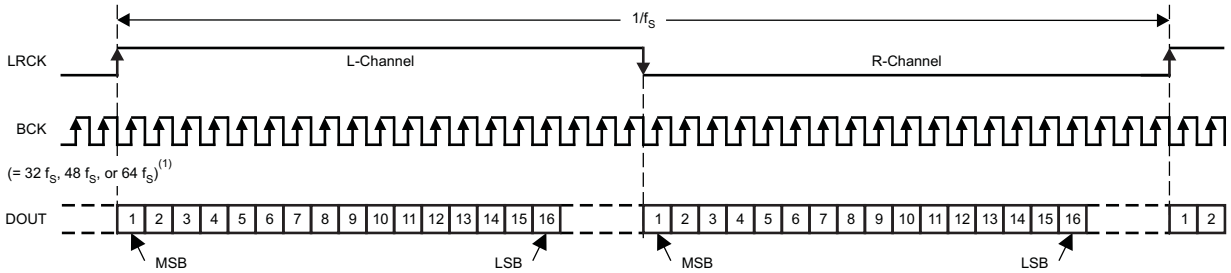

(d) Burst BCK Interface Format in Master Mode; L-Channel = HIGH, R-Channel = LOW

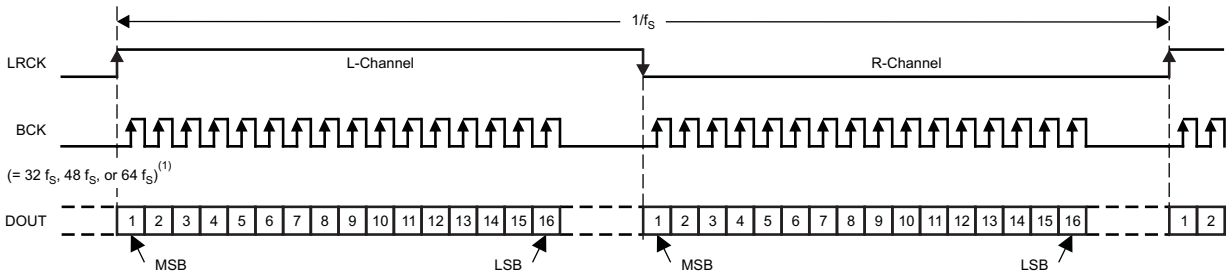

(e) DSP Format

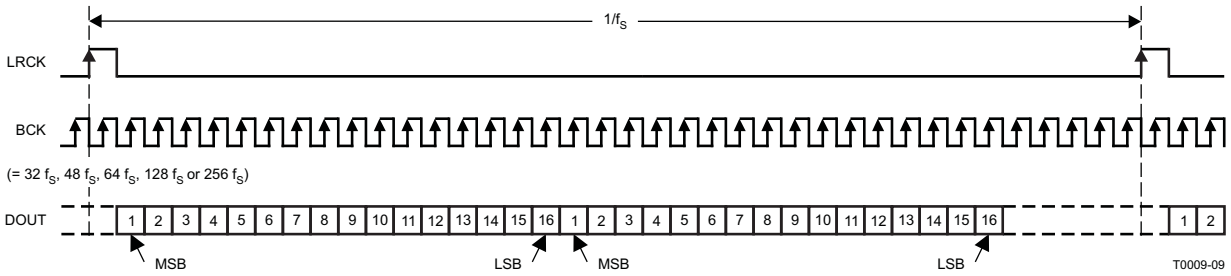

(1) All audio interface formats support BCK = 64 f_S in master mode (register 69, MSTR = 1). When set to multisampling rate, f_S of BCK is set to half the rate of the DSM operation frequency.

Figure 16. Audio Data Output Formats

Copyright © 2007, Texas Instruments Incorporated

THREE-WIRE INTERFACE (SPI, MODE (PIN 28) = LOW)

All write operations for the serial control port use 16-bit data words. Figure 17 shows the control data word format. The most significant bit must be 0. There are seven bits, labeled IDX[6:0], that set the register address for the write operation. The least-significant eight bits, D[7:0], contain the data to be written to the register specified by IDX[6:0].

Figure 18 shows the functional timing diagram for writing to the serial control port. To write the data into the mode register, the data is clocked into an internal shift register on the rising edge of the MC clock. The serial data should change on the falling edge of the MC clock and should be LOW during write mode. The rising edge of MS should be aligned with the falling edge of the last MC clock pulse in the 16-bit frame. The MC can run continuously between transactions while MS is in the LOW state.

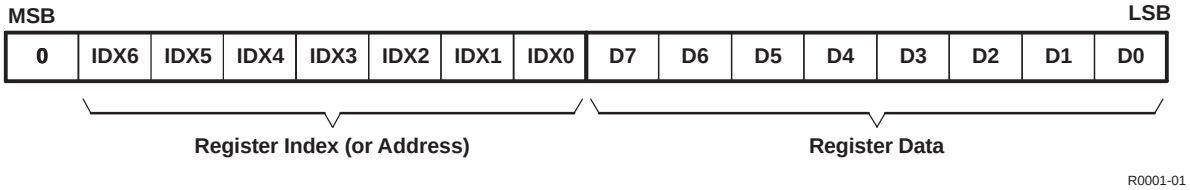

Figure 17. Control Data Word Format for MD

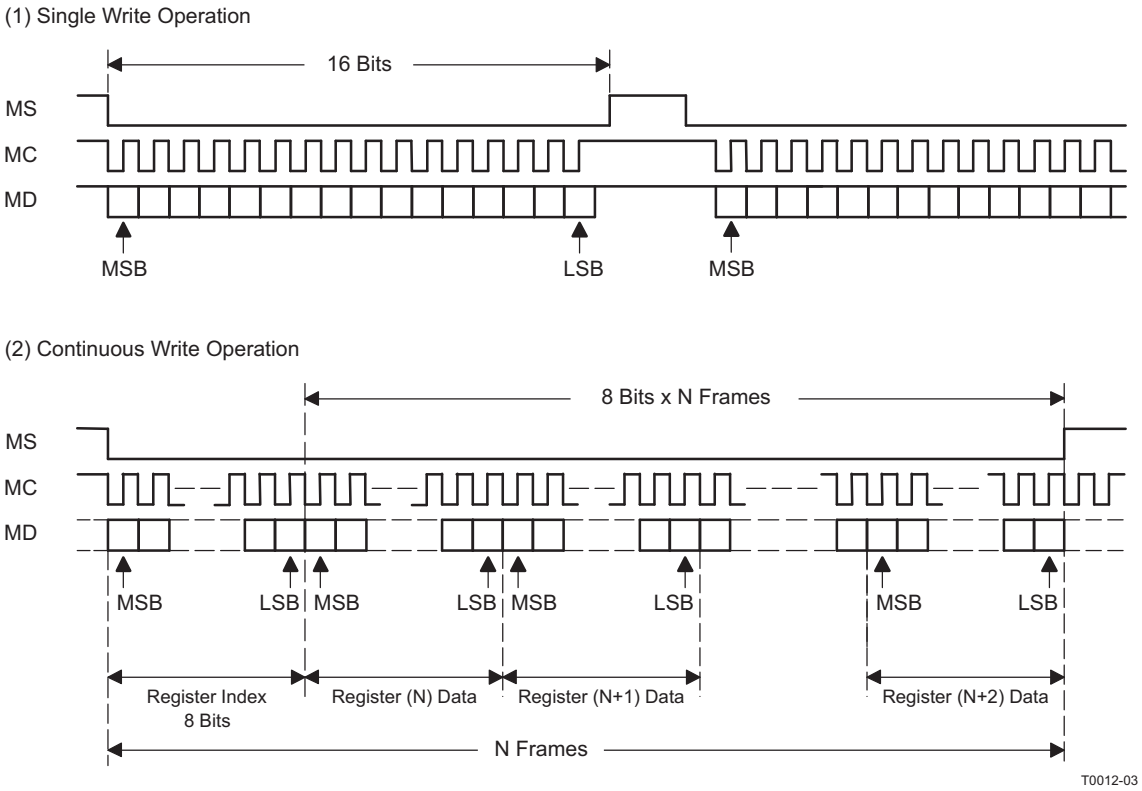

Figure 18. Register Write Operation

Three-Wire Interface (SPI) Timing Requirements

Figure 19 shows a detailed timing diagram for the serial control interface. These timing parameters are critical for proper control port operation.

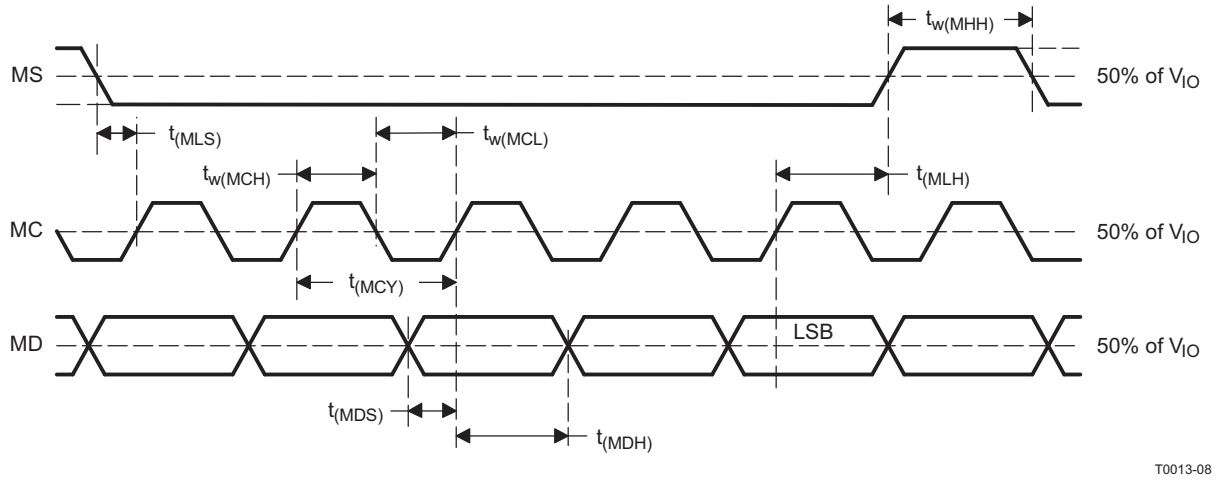

PARAMETERS	SYMBOL	MIN	TYP	MAX	UNIT
MC pulse cycle time	$t_{(MCY)}$	500 (1)			ns
MC low-level time	$t_{w(MCL)}$	50			ns
MC high-level time	$t_{w(MCH)}$	50			ns
MS high-level time	$t_{w(MHH)}$	See (1)			ns
MS falling edge to MC rising edge	$t_{(MLS)}$	50			ns
MS hold time	$t_{(MLH)}$	20			ns
MD hold time	$t_{(MDH)}$	15			ns
MD setup time	$t_{(MDS)}$	20			ns

(1) 3/(128 f_S) s (min), where f_S is the sampling frequency

Figure 19. SPI Interface Timing

Copyright © 2007, Texas Instruments Incorporated

TWO-WIRE INTERFACE [I²C, MODE (PIN 28) = HIGH]

The PCM1870 supports the I²C serial bus and the data transmission protocol for the I²C standard as a slave device. This protocol is explained in I²C specification 2.0.

In I²C mode, the control terminals are changed as follows.

TERMINAL NAME	PROPERTY	DESCRIPTION
MS/ADR	Input	I²C address
MD/SDA	Input/output	I²C data
MC/SCL	Input	I²C clock

Slave Address

MSB							LSB
1	0	0	0	1	1	ADR	R/$\overline{W}$

The PCM1870 has its 7-bit slave address. The first six bits (MSBs) of the slave address are factory preset to 1000 11. The next bit of the address byte is the device select bit, which can be user-defined by ADR terminal. A maximum of two PCM1870s can be connected on the same bus at one time. Each PCM1870 responds when it receives its own slave address.

Packet Protocol

A master device must control packet protocol, which is start condition, slave address with read/write bit, data if write or acknowledgement if read, and stop condition. The PCM1870 supports only slave-receiver and slave-transmitter.

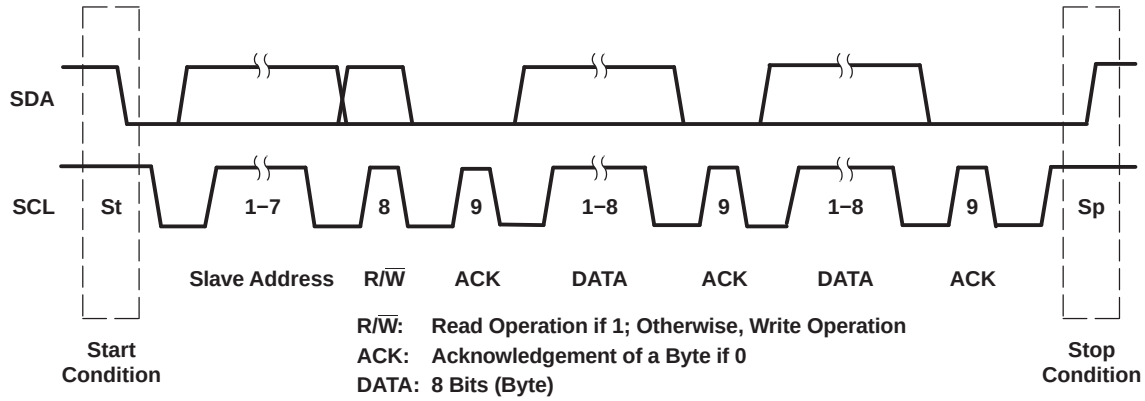

Write Operation

Transmitter	*M*	*M*	*M*	*S*	*M*	*S*	*M*	*S*	*M*
Data Type	St	Slave Address	R/$\overline{W}$	ACK	DATA	ACK	DATA	ACK	Sp

Read Operation

Transmitter	*M*	*M*	*M*	*S*	*S*	*M*	*S*	*M*	*M*
Data Type	St	Slave Address	R/$\overline{W}$	ACK	DATA	ACK	DATA	NACK	Sp

M: Master Device *S: Slave Device*
St: Start Condition Sp: Stop Condition

T0049-03

Figure 20. Basic I²C Framework

Write Operation

A master can write any PCM1870 registers using single access. The master sends a PCM1870 slave address with a write bit, a register address, and the data. When undefined registers are accessed, the PCM1870 does not send an acknowledgement. The Figure 21 shows a diagram of the write operation.

Transmitter	*M*	*M*	*M*	*S*	*M*	*S*	*M*	*S*	*M*
Data Type	St	Slave Address	$\overline{W}$	ACK	Reg Address	ACK	Write Data	ACK	Sp

M: Master Device *S: Slave Device*
St: Start Condition $\overline{W}$: Write ACK: Acknowledge Sp: Stop Condition

R0002-01

Figure 21. Framework for Write Operation

Read Operation

A master can read the PCM1870 register. The value of the register address is stored in an indirect index register in advance. The master sends a PCM1870 slave address with a read bit after storing the register address. Then the PCM1870 transfers the data which the index register points to. Figure 22 shows a diagram of the read operation.

Transmitter	*M*	*M*	*M*	*S*	*M*	*S*	*M*	*M*	*M*	*S*	*S*	*M*	*M*
Data Type	St	Slave Address	$\overline{W}$	ACK	Reg Address	ACK	Sr	Slave Address	R	ACK	Read Data	NACK	Sp

M: Master Device *S: Slave Device* St: Start Condition
Sr: Repeated Start Condition ACK: Acknowledge Sp: Stop Condition NACK: Not Acknowledge
$\overline{W}$: Write R: Read

R0002-02

NOTE: The slave address after the repeated start condition must be the same as the previous slave address.

Figure 22. Read Operation

Copyright © 2007, Texas Instruments Incorporated

Timing Diagram

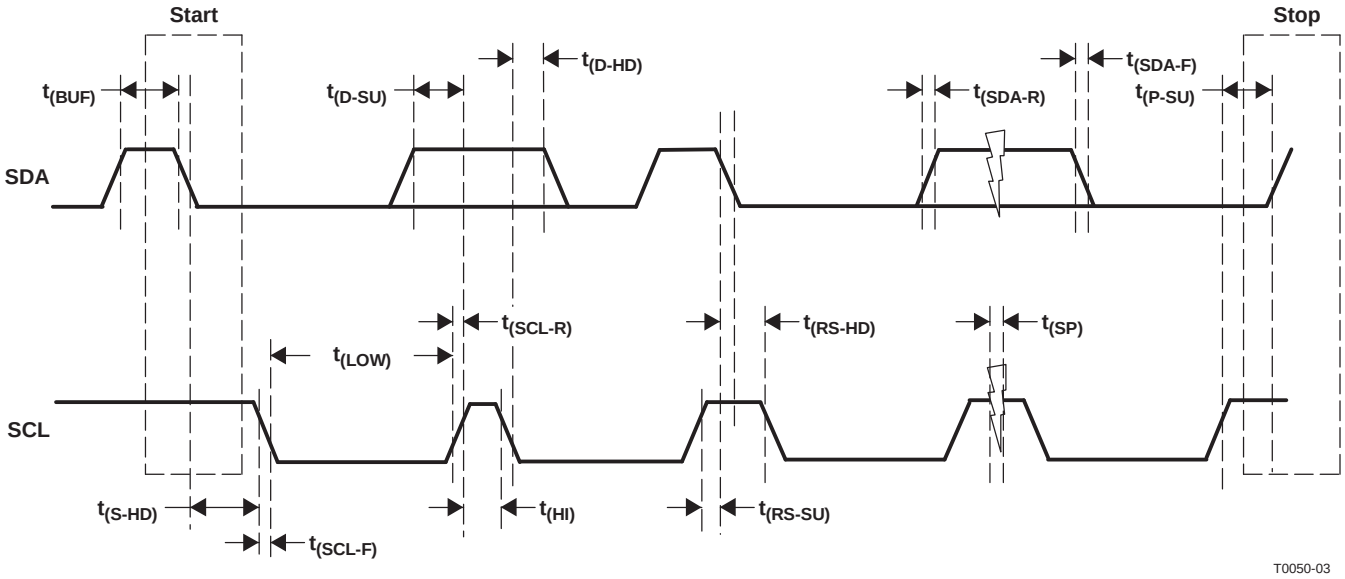

TIMING CHARACTERISTICS					
SYMBOL	**PARAMETER**	**CONDITIONS**	**MIN**	**MAX**	**UNIT**
f_{SCL}	SCL clock frequency	Standard		100	kHz
$t_{(BUF)}$	Bus free time between a STOP and START condition	Standard	4.7		µs
$t_{(LOW)}$	Low period of the SCL clock	Standard	4.7		µs
$t_{(HI)}$	High period of the SCL clock	Standard	4		µs
$t_{(RS-SU)}$	Setup time for START condition	Standard	4.7		µs
$t_{(S-HD)}$	Hold time for START condition	Standard	4		µs
$t_{(D-SU)}$	Data setup time	Standard	250		ns
$t_{(D-HD)}$	Data hold time	Standard	0	900	ns
$t_{(SCL-R)}$	Rise time of SCL signal	Standard	20 + 0.1 C_B	1000	ns
$t_{(SCL-F)}$	Fall time of SCL signal	Standard	20 + 0.1 C_B	1000	ns
$t_{(SDA-R)}$	Rise time of SDA signal	Standard	20 + 0.1 C_B	1000	ns
$t_{(SDA-F)}$	Fall time of SDA signal	Standard	20 + 0.1 C_B	1000	ns
$t_{(P-SU)}$	Setup time for STOP condition	Standard	4		µs
C_B	Capacitive load for SDA and SCL line			400	pF
$t_{(SP)}$	Pulse duration of spike suppressed			25	ns

Figure 23. I²C Interface Timing

USER-PROGRAMMABLE MODE CONTROLS

Register Map

The mode control register map is shown in Table 6. Each register includes an index (or address) indicated by the IDX[6:0] bits.

Table 6. Mode Control Register Map

REGISTER	IDX [6:0] (B14–B8)	DESCRIPTION	B7	B6	B5	B4	B3	B2	B1	B0
Register 73	49h	Analog bias power up/down	PBIS	RSV	RSV	RSV	RSV	RSV	RSV	RSV
Register 74	4Ah	V_{COM} power up/down	RSV	RSV	RSV	RSV	RSV	RSV	RSV	PCOM
Register 79	4Fh	Volume for ADC input (L-ch)	RSV	RSV	ALV5	ALV4	ALV3	ALV2	ALV1	ALV0
Register 80	50h	Volume for ADC input (R-ch)	RSV	RSV	ARV5	ARV4	ARV3	ARV2	ARV1	ARV0
Register 81	51h	ADC high pass-filter, soft mute, audio interface	HPF1	HPF0	RMUL	RMUR	RSV	DSMC	RFM1	RFM0
Register 82	52h	ADC, MCB, PG1, 2, 5, 6, D2S power up/down	RSV	RSV	PAIR	PAIL	PADS	PMCB	PADR	PADL
Register 83	53h	Auto level control for recording	RALC	RSV	RRTC	RATC	RCP1	RCP0	RLV1	RLV0
Register 84	54h	Master mode	RSV	RSV	RSV	RSV	RSV	MSTR	RSV	BIT0
Register 85	55h	System reset, sampling rate control	SRST	RSV	NPR5	NPR4	NPR3	NPR2	NPR1	NPR0
Register 86	56h	BCK config, master mode, zero cross	MBST	MSR2	MSR1	MSR0	RSV	RSV	RSV	ZCRS
Register 87	57h	Analog input select (MUX1, 2, 3, 4)	AD2S	RSV	AIR1	AIR0	RSV	RSV	AIL1	AIL0
Register 90	5Ah	V_{COM} power up/down, ramp up/down time, boost	RSV	RSV	RSV	RSV	RSV	RSV	G20R	G20L
Register 92	5Ch	Bass boost gain level (200 Hz)	LPAE	RSV	RSV	LGA4	LGA3	LGA2	LGA1	LGA0
Register 93	5Dh	Middle boost gain level (1 kHz)	RSV	RSV	RSV	MGA4	MGA3	MGA2	MGA1	MGA0
Register 94	5Eh	Treble boost gain level (5 kHz)	RSV	RSV	RSV	HGA4	HGA3	HGA2	HGA1	HGA0
Register 95	5Fh	Sound effect source select, 3D sound	RSV	3DEN	RSV	3FL0	3DP3	3DP2	3DP1	3DP0
Register 96	60h	2-stage notch filter, digital monaural mixing	NEN2	NEN1	NUP2	NUP1	RSV	RSV	RSV	MXEN
Register 97	61h	1st-stage notch filter lower coefficient (a1)	F107	F106	F105	F104	F103	F102	F101	F100
Register 98	62h	1st-stage notch filter upper coefficient (a1)	F115	F114	F113	F112	F111	F110	F109	F108
Register 99	63h	1st-stage notch filter lower coefficient (a2)	F207	F206	F205	F204	F203	F202	F201	F200
Register 100	64h	1st-stage notch filter upper coefficient (a2)	F215	F214	F213	F212	F211	F210	F209	F208
Register 101	65h	2nd-stage notch filter lower coefficient (a1)	S107	S106	S105	S104	S103	S102	S101	S100
Register 102	66h	2nd-stage notch filter upper coefficient (a1)	S115	S114	S113	S112	S111	S110	S109	S108
Register 103	67h	2nd-stage notch filter lower coefficient (a2)	S207	S206	S205	S204	S203	S202	S201	S200
Register 104	68h	2nd-stage notch filter upper coefficient (a2)	S215	S214	S213	S212	S211	S210	S209	S208
Register 124	7Ch	Mic boost	RSV	RSV	RSV	RSV	RSV	RSV	G12R	G12L
ADC: A/D converter MCB: Microphone bias PGx: Analog input buffer D2S: Differential to single-ended amplifier										

Copyright © 2007, Texas Instruments Incorporated

Register 73

	B15	B14	B13	B12	B11	B10	B9	B8	B7	B6	B5	B4	B3	B2	B1	B0
Register 73	0	IDX6	IDX5	IDX4	IDX3	IDX2	IDX1	IDX0	PBIS	RSV	RSV	RSV	RSV	RSV	RSV	RSV

IDX[6:0]: 100 1001b (49h) Register 73

PBIS: Power Up/Down Control for Bias

Default value: 0

This bit is used to control power up/down for the analog bias circuit.

PBIS = 0	Power down (default)
PBIS = 1	Power up

Register 74

	B15	B14	B13	B12	B11	B10	B9	B8	B7	B6	B5	B4	B3	B2	B1	B0
Register 74	0	IDX6	IDX5	IDX4	IDX3	IDX2	IDX1	IDX0	RSV	RSV	RSV	RSV	RSV	RSV	RSV	PCOM

IDX[6:0]: 100 1010b (4Ah) Register 74

PCOM: Power Up/Down Control for V_{COM}

Default value: 0

This bit is used to control power up/down for V_{COM}.

PCOM = 0	Power down (default)
PCOM = 1	Power up

Copyright © 2007, Texas Instruments Incorporated

Register 79 and 80

	B15	B14	B13	B12	B11	B10	B9	B8	B7	B6	B5	B4	B3	B2	B1	B0
Register 79	0	IDX6	IDX5	IDX4	IDX3	IDX2	IDX1	IDX0	RSV	RSV	ALV5	ALV4	ALV3	ALV2	ALV1	ALV0
Register 80	0	IDX6	IDX5	IDX4	IDX3	IDX2	IDX1	IDX0	RSV	RSV	ARV5	ARV4	ARV3	AR2	ARV1	ARV0

IDX[6:0]: 100 1111b (4Fh) Register 79

IDX[6:0]: 101 0000b (50h) Register 80

ALV[5:0]: Gain Control for PG3 (ADC Analog Input R-Channel)

ARV[5:0]: Gain Control for PG4 (ADC Analog Input L-Channel)

Default value: 00

PG3 and PG4 can be independently controlled for ADC input from 30 dB to –12 dB in 1-dB steps. ADC output may have zipper noise when changing levels. In the PCM1870, the noise can be reduced when making the change by using zero-cross detection (Register 85, ZCRS).

Table 7. Gain Level Setting

ALV[5:0], ARV[5:0]		GAIN LEVEL SETTING	ALV[5:0], ARV[5:0]		GAIN LEVEL SETTING
BINARY	HEX		BINARY	HEX	
10 1010	2A	30 dB	01 0100	14	8 dB
10 1001	29	29 dB	01 0011	13	7 dB
10 1000	28	28 dB	01 0010	12	6 dB
10 0111	27	27 dB	01 0001	11	5 dB
10 0110	26	26 dB	01 0000	10	4 dB
10 0101	25	25 dB	00 1111	0F	3 dB
10 0100	24	24 dB	00 1110	0E	2 dB
10 0011	23	23 dB	00 1101	0D	1 dB
10 0010	22	22 dB	00 1100	0C	0 dB
10 0001	21	21 dB	00 1011	0B	–1 dB
10 0000	20	20 dB	00 1010	0A	–2 dB
01 1111	1F	19 dB	00 1001	09	–3 dB
01 1110	1E	18 dB	00 1000	08	–4 dB
01 1101	1D	17 dB	00 0111	07	–5 dB
01 1100	1C	16 dB	00 0110	06	–6 dB
01 1011	1B	15 dB	00 0101	05	–7 dB
01 1010	1A	14 dB	00 0100	04	–8 dB
01 1001	19	13 dB	00 0011	03	–9 dB
01 1000	18	12 dB	00 0010	02	–10 dB
01 0111	17	11 dB	00 0001	01	–11 dB
01 0110	16	10 dB	00 0000	00	–12 dB (default)
01 0101	15	9 dB			

Copyright © 2007, Texas Instruments Incorporated

Register 81

	B15	B14	B13	B12	B11	B10	B9	B8	B7	B6	B5	B4	B3	B2	B1	B0
Register 81	0	IDX6	IDX5	IDX4	IDX3	IDX2	IDX1	IDX0	HPF1	HPF0	RMUL	RMUR	RSV	DSMC	RFM1	RFM0

IDX[6:0]: 101 0001b (51h) Register 81

HPF[1:0]: High-Pass Filter Selection

Default value: 00

The PCM1870 has a digital high-pass filter to remove dc voltage at the input of the ADC. The cutoff frequency of the high-pass filter can be selected.

HPF[1:0]	High Pass Filter Selection
0 0	f_C = 4 Hz at 48 kHz (default)
0 1	f_C = 240 Hz at 48 kHz
1 0	f_C = 120 Hz at 48 kHz
1 1	High-pass filter disabled

RMUL: Digital Soft Mute Control for ADC L-Channel

RMUR: Digital Soft Mute Control for ADC R-Channel

Default value: 1

The digital output of the ADC can be independently muted or unmuted. The transition from the current volume level to mute, or the return to the previous volume setting from mute, occurs at the rate of one 1-dB step for each $8/f_S$ time period. When RMUL and RMUR = 0, the digital data is increased from mute to the previous attenuation level, and when RMUL and RMUR = 1, the digital data is decreased from the current attenuation level to mute. In the PCM1870, audible zipper noise can be reduced by using zero-cross detection (register 85, ZCRS).

RMUL, RMUR = 0	Mute disabled
RMUL, RMUR = 1	Mute enabled (default)

DSMC: Waiting Time Turn ADC Mute Off at Power Up

Default value: 0

ADC digital output has waiting time at power up when DSMC = 0. It is recommended to set DSMC = 0.

DSMC = 0	10 ms at 48 kHz (default)
DSMC = 1	No wait

RFM[1:0]: Audio Interface Selection for ADC (Digital Output)

Default value: 00

The audio interface format for ADC digital output has I^2S, right-justified, left-justified, and DSP formats.

RFM[1:0]	Audio Interface Selection for ADC Digital Output
0 0	I^2S (default)
0 1	Right-justified
1 0	Left-justified
1 1	DSP mode

Copyright © 2007, Texas Instruments Incorporated

Register 82

	B15	B14	B13	B12	B11	B10	B9	B8	B7	B6	B5	B4	B3	B2	B1	B0
Register 82	0	IDX6	IDX5	IDX4	IDX3	IDX2	IDX1	IDX0	RSV	RSV	PAIR	PAIL	PADS	PMCB	PADR	PADL

IDX[6:0]: 101 0010b (52h) Register 82

PAIR: Power Up/Down for PG2 and PG6 (Gain Amplifier for Analog Input R-Channel)

PAIR: Power Up/Down for PG1 and PG5 (Gain Amplifier for Analog Input L-Channel)

Default value: 0

This bit is used to control power up/down for PG1, -2 and PG5, -6 (gain amplifier for analog input).

PAIR, PAIL = 0	Power down (default)
PAIR, PAIL = 1	Power up

PADS: Power Up/Down for D2S (Differential Amplifier) of AIN1L and AIN1R

Default value: 0

This bit is used to control power up/down for D2S (differential-to-single amplifier).

PADS = 0	Power down (default)
PADS = 1	Power up

PMCB: Power Up/Down Control for Microphone Bias Source

Default value: 0

This bit is used to control power up/down for the microphone bias source.

PMCB = 0	Power down (default)
PMCB = 1	Power up

PADR: Power Up/Down Control for ADR (ADC and Digital Filter R-Channel)

PADL: Power Up/Down Control for ADL (ADC and Digital Filter L-Channel)

Default value: 0

This bit is used to control power up/down for the ADC and decimation filter.

PADR, PADL = 0	Power down (default)
PADR, PADL = 1	Power up

Copyright © 2007, Texas Instruments Incorporated

Register 83

	B15	B14	B13	B12	B11	B10	B9	B8	B7	B6	B5	B4	B3	B2	B1	B0
Register 83	0	IDX6	IDX5	IDX4	IDX3	IDX2	IDX1	IDX0	RALC	RSV	RRTC	RATC	RCP1	RCP0	RLV1	RLV0

IDX[6:0]: 1010011b (53h) Register 83

RALC: Automatic Level Control (ALC) Enable for Recording

Default value: 0

Auto level control can be enabled with some parameters for microphone input or lower-level analog source.

RALC = 0	Disabled (default)
RALC = 1	Enabled

RRTC: ALC Recovery Time Control for Recording

Default value: 0

This bit selects the time during which a gain level change completes to compress the signal when the input to the ADC increases in amplitude.

RRTC = 0	3.4 s (default)
RRTC = 1	13.6 s

RATC: ALC Attack Time Control for Recording

Default value: 0

This bit selects the time during which a gain level change completes to expand the signal when the input to the ADC decreases in amplitude.

RATC = 0	1 ms (default)
RATC = 1	2 ms

RCP[1:0]: ALC Compression Level Control for Recording

Default value: 00

Auto level control can set the compression level to –2, –6, or –12 dB. Higher-level signals should be compressed to avoid saturation or degradation of sound quality.

RCP[1:0]	ALC Compression Level Control for Recording
0 0	–2 dB (default)
0 1	–6 dB
1 0	–12 dB
1 1	Reserved

RLV[1:0]: ALC Expansion Level Control for Recording

Default value: 00

Auto level control can set the expansion level to 0, 6, 14, or 24 dB. Lower-level signals should be expanded to make a small signal easy to hear. If set to 0 dB, the ALC can be operated only as a limiter.

RLV[1:0]	ALC Expansion Level Control for Recording
0 0	0 dB (default)
0 1	6 dB
1 0	14 dB
1 1	24 dB

Copyright © 2007, Texas Instruments Incorporated

Register 84–86

	B15	B14	B13	B12	B11	B10	B9	B8	B7	B6	B5	B4	B3	B2	B1	B0
Register 84	0	IDX6	IDX5	IDX4	IDX3	IDX2	IDX1	IDX0	RSV	RSV	RSV	RSV	RSV	MSTR	RSV	BIT0
Register 85	0	IDX6	IDX5	IDX4	IDX3	IDX2	IDX1	IDX0	SRST	RSV	NPR5	NPR4	NPR3	NPR2	NPR1	NPR0
Register 86	0	IDX6	IDX5	IDX4	IDX3	IDX2	IDX1	IDX0	MBST	MSR2	MSR1	MSR0	RSV	RSV	RSV	ZCRS

IDX[6:0]: 101 0100b (54h) Register 84

IDX[6:0]: 101 0101b (55h) Register 85

IDX[6:0]: 101 0110b (56h) Register 86

MSTR: Master or Slave Selection for Audio Interface

Default value: 0

This bit is used to select either master or slave mode for the audio interface. In master mode, PCM1870 generates LRCK and BCK from the system clock. In slave mode, it receives LRCK and BCK from another device.

MSTR = 0	Slave interface (default)
MSTR = 1	Master interface

BIT0: Bit Length Selection for Audio Interface

Default value: 1

This bit is used to select data bit length for the ADC output.

BIT0 = 0	Reserved
BIT0 = 1	16 bits (default)

SRST: System Reset

Default value: 0

This bit is used to enable system reset. All circuits are reset by setting SRST = 1. After completing the reset sequence, SRST resets to 0 automatically.

SRST = 0	Reset disabled (default)
SRST = 1	Reset enabled

NPR[5:0]: System Clock Rate Selection

Default value: 00 0000

These bits are used to select the system clock rate. See Table 8 for details.

MBST: BCK Output Configuration in Master Mode

Default value: 0

This bit is used to control the BCK output configuration in master mode. V_{IO} (I/O cell power supply) power consumption can be reduced by adjusting BCK edge to bit number when setting MBST = 1. This is effective in master mode (register 69 MSTR = 1).

MBST = 0	Normal output (default)
MBST = 1	Burst output

Copyright © 2007, Texas Instruments Incorporated

MSR[2:0]: System Clock Dividing Rate Selection in Master Mode (Register 70)

Default value: 000

These bits are used to set the dividing rate of the input system clock. See Table 8 for details.

Table 8. System Clock Frequency for Common Audio Clock

SYSTEM CLOCK SCK (MHz)	ADC SAMPLING RATE ADC f_S (kHz) / DAC SAMPLING RATE DAC f_S (kHz)	REGISTER SETTING		BIT CLOCK BCK (f_S)
		MSR[2:0]	NPR[5:0]	
6.144	24 (SCK/256)	010	00 0000	64
	16 (SCK/384)	011	00 0000	64
	12 (SCK/512)	100	00 0000	64
	8 (SCK/768)	101	00 0000	64
	6 (SCK/1024)	110	00 0000	64
	4 (SCK/1536)	111	00 0000	64
8.192	32 (SCK/256)	010	00 0000	64
	16 (SCK/512)	100	00 0000	64
	8 (SCK/1024)	110	00 0000	64
12.288	48 (SCK/256)	010	00 0000	64
	32 (SCK/384)	011	00 0000	64
	24 (SCK/512)	100	00 0000	64
	16 (SCK/768)	101	00 0000	64
	12 (SCK/1024)	110	00 0000	64
	8 (SCK/1536)	111	00 0000	64
18.432	48 (SCK/384)	011	00 0000	64
	24 (SCK/768)	101	00 0000	64
	12 (SCK/1536)	111	00 0000	64
5.6448	22.05 (SCK/256)	010	00 0000	64
	14.7 (SCK/384)	011	00 0000	64
	11.025 (SCK/512)	100	00 0000	64
	7.35 (SCK/768)	101	00 0000	64
	5.5125 (SCK/1024)	110	00 0000	64
	3.675 (SCK/1536)	111	00 0000	64
11.2896	44.1 (SCK/256)	010	00 0000	64
	29.4 (SCK/384)	011	00 0000	64
	22.05 (SCK/512)	100	00 0000	64
	14.7 (SCK/768)	101	00 0000	64
	11.025 (SCK/1024)	110	00 0000	64
	7.35 (SCK/1536)	111	00 0000	64
NOTE: Other settings are reserved.				

Copyright © 2007, Texas Instruments Incorporated

Table 9. System Clock Frequency for Application-Specific Audio Clock

SYSTEM CLOCK SCK (MHz)	ADC SAMPLING RATE ADC f_S (kHz) / DAC SAMPLING RATE DAC f_S (kHz)	REGISTER SETTING		BIT CLOCK BCK (f_S)
		MSR[2:0]	NPR[5:0]	
13.5	48.214 (SCK/280)	010	00 0010	70
	44.407 (SCK/304)	010	00 0001	76
	32.142 (SCK/420)	010	10 0010	70
	24.107 (SCK/560)	100	00 0010	70
	22.203 (SCK/608)	100	00 0001	76
	16.071 (SCK/840)	100	10 0010	70
	12.053 (SCK/1120)	110	00 0010	70
	8.035 (SCK/1680)	110	10 0010	70
27	48.214 (SCK/560)	010	01 0010	70
	44.407 (SCK/608)	010	01 0001	76
	32.142 (SCK/840)	010	11 0010	70
	24.107 (SCK/1120)	100	01 0010	70
	22.203 (SCK/1216)	100	01 0001	76
	16.071 (SCK/1680)	100	11 0010	70
	12.053 (SCK/2240)	110	01 0010	70
	8.035 (SCK/3360)	110	11 0010	70
12	48.387 (SCK/248)	010	00 0100	62
	44.117 (SCK/272)	010	00 0011	68
	32.258 (SCK/372)	010	10 0100	62
	24.193 (SCK/496)	100	00 0100	62
	22.058 (SCK/544)	100	00 0011	68
	16.129 (SCK/744)	100	10 0100	62
	12.096 (SCK/992)	110	00 0100	62
	8.064 (SCK/1488)	110	10 0100	62
24	48.387 (SCK/496)	010	01 0100	62
	44.117 (SCK/544)	010	01 0011	68
	32.258 (SCK/744)	010	11 0100	62
	24.193 (SCK/992)	100	01 0100	62
	22.058 (SCK/1088)	100	01 0011	68
	16.129 (SCK/1488)	100	11 0100	62
	12.096 (SCK/1984)	110	01 0100	62
	8.064 (SCK/2796)	110	11 0100	62
19.2	48.484 (SCK/396)	011	00 0110	66
	44.444 (SCK/432)	011	00 0101	72
	32.323 (SCK/594)	011	10 0110	66
	24.242 (SCK/792)	101	00 0110	66
	22.222 (SCK/864)	101	00 0101	72
	16.161 (SCK/1188)	101	10 0110	66
	12.121 (SCK/1584)	111	00 0110	66
	8.080 (SCK/2376)	111	10 0110	66

Copyright © 2007, Texas Instruments Incorporated

Table 9. System Clock Frequency for Application-Specific Audio Clock (continued)

SYSTEM CLOCK SCK (MHz)	ADC SAMPLING RATE ADC f_S (kHz) / DAC SAMPLING RATE DAC f_S (kHz)	REGISTER SETTING		BIT CLOCK BCK (f_S)
		MSR[2:0]	NPR[5:0]	
38.4	48.484 (SCK/792)	011	01 0110	66
	44.444 (SCK/864)	011	01 0101	72
	32.323 (SCK/1188)	011	11 0110	66
	24.242 (SCK/1584)	101	01 0110	66
	22.222 (SCK/1728)	101	01 0101	72
	16.161 (SCK/2376)	101	11 0110	66
	12.121 (SCK/3168)	111	01 0110	66
	8.080 (SCK/4752)	111	11 0110	66
13	47.794 (SCK/272)	010	00 1000	68
	43.918 (SCK/296)	010	00 0111	74
	31.862 (SCK/408)	010	10 1000	68
	23.897 (SCK/544)	100	00 1000	68
	21.959 (SCK/592)	100	00 0111	74
	15.931 (SCK/816)	100	10 1000	68
	11.948 (SCK/1088)	110	00 1000	68
	7.965 (SCK/1632)	110	10 1000	68
26	47.794 (SCK/544)	010	01 1000	68
	43.918 (SCK/592)	010	01 0111	74
	31.862 (SCK/816)	010	11 1000	68
	23.897 (SCK/1088)	100	01 1000	68
	21.959 (SCK/1184)	100	01 0111	74
	15.931 (SCK/1632)	100	11 1000	68
	11.948 (SCK/2176)	110	01 1000	68
	7.965 (SCK/3264)	110	11 1000	68
19.68	48.235 (SCK/408)	011	00 1010	68
	44.324 (SCK/444)	011	00 1001	74
	32.156 (SCK/612)	011	10 1010	68
	24.117 (SCK/816)	101	00 1010	68
	22.162 (SCK/888)	101	00 1001	74
	16.078 (SCK/1224)	101	10 1010	68
	12.058 (SCK/1632)	111	00 1010	68
	8.039 (SCK/2448)	111	10 1010	68
39.36	48.235 (SCK/816)	011	01 1010	68
	44.324 (SCK/888)	011	01 1001	74
	32.156 (SCK/1224)	011	11 1010	68
	24.117 (SCK/1632)	101	01 1010	68
	22.162 (SCK/1776)	101	01 1001	74
	16.078 (SCK/2448)	101	11 1010	68
	12.058 (SCK/3264)	111	01 1010	68
	8.039 (SCK/4896)	111	11 1010	68

Copyright © 2007, Texas Instruments Incorporated

ZCRS: Zero Cross for Digital Attenuation/Mute and Analog Gain Setting

Default value: 0

This bit is used to enable the zero-cross detector, which reduces zipper noise while the digital soft mute or analog gain setting is being changed. If no zero-cross data is input for a 512/f_S period (10.6 ms at a 48-kHz sampling rate), then a time-out occurs and the PCM1870 starts changing the attenuation, gain, or volume level. The zero-cross detector cannot be used with continuous-zero and dc data.

ZCRS = 0	Zero cross disabled (default)
ZCRS = 1	Zero cross enabled

Register 87

	B15	B14	B13	B12	B11	B10	B9	B8	B7	B6	B5	B4	B3	B2	B1	B0
Register 87	0	IDX6	IDX5	IDX4	IDX3	IDX2	IDX1	IDX0	AD2S	RSV	AIR1	AIR0	RSV	RSV	AIL1	AIL0

IDX[6:0]: 101 0111b (57h) Register 87

AD2S: Differential Amplifier Selector (MUX3 and MUX4)

Default value: 0

This bit is used to select whether a single-ended amplifier or differential amplifier (D2S) is used as the input for the ADC. MUX3 and MUX4 use the single-ended input when AD2S = 0. MUX3 and MUX4 use the monaural differential input when AD2S = 1.

AD2S = 0	Single-ended amplifier (default)
AD2S = 1	Differential amplifier

AIL[1:0]: AIN1L and AIN2L Selector (MUX1)

Default value: 00

MUX1 selects the analog input, AIN1L or AIN2L.

AIL[1:0]	AIN L-channel Select
0 0	Disconnect (default)
0 1	AIN1L
1 0	AIN2L
1 1	Reserved

AIR[1:0]: AIN1R and AIN2R Selector (MUX2)

Default value: 00

MUX2 selects the analog input, AIN1R or AIN2R.

AIR[1:0]	AIN R-channel Select
0 0	Disconnect (default)
0 1	AIN1R
1 0	AIN2R
1 1	Reserved

Copyright © 2007, Texas Instruments Incorporated

Register 90

	B15	B14	B13	B12	B11	B10	B9	B8	B7	B6	B5	B4	B3	B2	B1	B0
Register 90	0	IDX6	IDX5	IDX4	IDX3	IDX2	IDX1	IDX0	RSV	RSV	RSV	RSV	RSV	RSV	G20R	G20L

IDX[6:0]: 101 1010b (5Ah) Register 90

G20R: 20-dB Boost for PG2 (Gain Amplifier for AIN1R and AIN2R)

Default value: 0

This bit is used to boost the microphone signal when the analog input is small.

G12R (REGISTER 124)	G20R (REGISTER 90)	PG2 GAIN
0	0	0 dB (default)
0	1	20 dB
1	0	12 dB
1	1	Reserved

G20L: 20 dB Boost for PG1 (Gain Amplifier for AIN1L and AIN2L)

Default value: 0

This bit is used to boost the microphone signal when the analog input is small.

G12L (REGISTER 124)	G20L (REGISTER 90)	PG1 GAIN
0	0	0 dB (default)
0	1	20 dB
1	0	12 dB
1	1	Reserved

Copyright © 2007, Texas Instruments Incorporated

Register 92

	B15	B14	B13	B12	B11	B10	B9	B8	B7	B6	B5	B4	B3	B2	B1	B0
Register 92	0	IDX6	IDX5	IDX4	IDX3	IDX2	IDX1	IDX0	LPAE	RSV	RSV	LGA4	LGA3	LGA2	LGA1	LGA0

IDX[6:0]: 101 1100b (5Ch) Register 92

LPAE: Automatic Attenuation Setting for Bass Boost Gain Control

Default value: 0

A gain setting for bass boost may cause digital data saturation, depending on the input data level. Where this could occur, LPAE can be used to set the same attenuation level as the bass boost gain level for the digital input data.

LPAE = 0	Disble (default)
LPAE = 1	Enable

LGA[4:0]: Bass Boost Gain Control

Default value: 0 0000

These bits are used to set bass boost gain level for the digital data. The center frequency for boost is 200 Hz at 44.1 kHz.

LGA[4:0]	TONE CONTROL GAIN (BASS)	LGA[4:0]	TONE CONTROL GAIN (BASS)
0 0000	0 dB (default)	0 1111	0 dB
0 0011	12 dB	1 0000	–1 dB
0 0100	11 dB	1 0001	–2 dB
0 0101	10 dB	1 0010	–3 dB
0 0110	9 dB	1 0011	–4 dB
0 0111	8 dB	1 0100	–5 dB
0 1000	7 dB	1 0101	–6 dB
0 1001	6 dB	1 0110	–7 dB
0 1010	5 dB	1 0111	–8 dB
0 1011	4 dB	1 1000	–9 dB
0 1100	3 dB	1 1001	–10 dB
0 1101	2 dB	1 1010	–11 dB
0 1110	1 dB	1 1011	–12 dB

Copyright © 2007, Texas Instruments Incorporated

Register 93

	B15	B14	B13	B12	B11	B10	B9	B8	B7	B6	B5	B4	B3	B2	B1	B0
Register 93	0	IDX6	IDX5	IDX4	IDX3	IDX2	IDX1	IDX0	RSV	RSV	RSV	MGA4	MGA3	MGA2	MGA1	MGA0

IDX[6:0]: 101 1101b (5Dh) Register 93

MGA[4:0]: Middle Boost Gain Control

Default value: 0 0000

These bits are used to set midrange boost gain level for the digital data. The center frequency for boost is 1 kHz.

MGA[4:0]	TONE CONTROL GAIN (MID)	MGA[4:0]	TONE CONTROL GAIN (MID)
0 0000	0 dB (default)	0 1111	0 dB
0 0011	12 dB	1 0000	–1 dB
0 0100	11 dB	1 0001	–2 dB
0 0101	10 dB	1 0010	–3 dB
0 0110	9 dB	1 0011	–4 dB
0 0111	8 dB	1 0100	–5 dB
0 1000	7 dB	1 0101	–6 dB
0 1001	6 dB	1 0110	–7 dB
0 1010	5 dB	1 0111	–8 dB
0 1011	4 dB	1 1000	–9 dB
0 1100	3 dB	1 1001	–10 dB
0 1101	2 dB	1 1010	–11 dB
0 1110	1 dB	1 1011	–12 dB

Copyright © 2007, Texas Instruments Incorporated

Register 94

	B15	B14	B13	B12	B11	B10	B9	B8	B7	B6	B5	B4	B3	B2	B1	B0
Register 94	0	IDX6	IDX5	IDX4	IDX3	IDX2	IDX1	IDX0	RSV	RSV	RSV	HGA4	HGA3	HGA2	HGA1	HGA0

IDX[6:0]: 101 1110b (5Eh) Register 94

HGA[4:0]: Treble Boost Gain Control

Default value: 0 0000

These bits are used to set treble boost gain level for the digital data. The center frequency for boost is 5 kHz.

HGA[4:0]	TONE CONTROL GAIN (TREBLE)	HGA[4:0]	TONE CONTROL GAIN (TREBLE)
0 0000	0 dB (default)	0 1111	0 dB
0 0011	12 dB	1 0000	–1 dB
0 0100	11 dB	1 0001	–2 dB
0 0101	10 dB	1 0010	–3 dB
0 0110	9 dB	1 0011	–4 dB
0 0111	8 dB	1 0100	–5 dB
0 1000	7 dB	1 0101	–6 dB
0 1001	6 dB	1 0110	–7 dB
0 1010	5 dB	1 0111	–8 dB
0 1011	4 dB	1 1000	–9 dB
0 1100	3 dB	1 1001	–10 dB
0 1101	2 dB	1 1010	–11 dB
0 1110	1 dB	1 1011	–12 dB

Copyright © 2007, Texas Instruments Incorporated

Register 95

	B15	B14	B13	B12	B11	B10	B9	B8	B7	B6	B5	B4	B3	B2	B1	B0
Register 95	0	IDX6	IDX5	IDX4	IDX3	IDX2	IDX1	IDX0	RSV	3DEN	RSV	3FL0	3DP3	3DP2	3DP1	3DP0

IDX[6:0]: 1011111b (5Fh) Register 95

3DEN: 3D Sound Effect Enable

Default value: 0

This bit is used for enabling the 3-D sound effect filter. This filter has two independently controlled parameters.

3DEN = 0	Disable (default)
3DEN = 1	Enable

3FL0: Filter Selection for 3D Sound

Default value: 0

This bit is used for selecting from two kinds of filter type, narrow and wide. These filters produce different 3-D effects.

3FL0 = 0	Narrow (default)
3FL0 = 1	Wide

3DP[3:0]: Efficiency for 3D Sound Effect

Default value: 0000

These bits are used for adjusting the 3-D sound efficiency. Higher percentages have greater efficiency.

3DP[3:0]	3D Sound Effect Efficiency
0000	0% (default)
0001	10%
0010	20%
0011	30%
0100	40%
0101	50%
0110	60%
0111	70%
1000	80%
1001	90%
1010	100%
1011	Reserved
:	:
1111	Reserved

Copyright © 2007, Texas Instruments Incorporated

Register 96

	B15	B14	B13	B12	B11	B10	B9	B8	B7	B6	B5	B4	B3	B2	B1	B0
Register 96	0	IDX6	IDX5	IDX4	IDX3	IDX2	IDX1	IDX0	NEN2	NEN1	NUP2	NUP1	RSV	RSV	RSV	MXEN

IDX[6:0]: 110 0000b (60h) Register 96

NEN2: Second-Stage Notch Filter Enable

Default value: 0

The PCM1870 has a two-stage notch filter. The two stages can separately set filter characteristics. This bit is used to enable the second stage.

NEN2 = 0	Disabled (default)
NEN2 = 1	Enabled

NEN1: First-Stage Notch Filter Enable

Default value: 0

The PCM1870 has a two-stage notch filter. The two stages can separately set filter characteristics. This bit is used to enable the first stage.

NEN1 = 0	Disabled (default)
NEN1 = 1	Enabled

NUP2: Second-Stage Notch Filter Coefficients Update

Default value: 0

This bit is used to update the coefficients for the second-stage notch filter. The coefficients written to registers 101, 102, 103, 104 are updated when NUP2 = 1.

NUP2 = 0	No update (default)
NUP2 = 1	Update

NUP1: First-Stage Notch Filter Coefficients Update

Default value: 0

This bit is used to update the coefficients for the first-stage notch filter. The coefficients written to registers 97, 98, 99, 100 are updated when NUP1 = 1.

NUP1 = 0	No update (default)
NUP1 = 1	Update

MXEN: Digital Monaural Mixing

Default value: 0

This bit is used to enable or disable monaural mixing in the section that combines L-ch and R-ch digital data.

MXEN = 0	Disabled (stereo, default)
MXEN = 1	Enabled (monaural mixing)

Copyright © 2007, Texas Instruments Incorporated

Registers 97–100

	B15	B14	B13	B12	B11	B10	B9	B8	B7	B6	B5	B4	B3	B2	B1	B0
Register 97	0	IDX6	IDX5	IDX4	IDX3	IDX2	IDX1	IDX0	F107	F106	F105	F104	F103	F102	F101	F100
Register 98	0	IDX6	IDX5	IDX4	IDX3	IDX2	IDX1	IDX0	F115	F114	F113	F112	F111	F110	F109	F108
Register 99	0	IDX6	IDX5	IDX4	IDX3	IDX2	IDX1	IDX0	F207	F206	F205	F204	F203	F202	F201	F200
Register 100	0	IDX6	IDX5	IDX4	IDX3	IDX2	IDX1	IDX0	F215	F214	F213	F212	F211	F210	F209	F208

IDX[6:0]: 110 0001b (61h) Register 97
IDX[6:0]: 110 0010b (62h) Register 98
IDX[6:0]: 110 0011b (63h) Register 99
IDX[6:0]: 110 0100b (64h) Register 100

F[107:100]: Lower 8 Bits of Coefficient a_1 for First-Stage Notch Filter
F[115:108]: Upper 8 Bits of Coefficient a_1 for First-Stage Notch Filter
F[207:200]: Lower 8 Bits of Coefficient a_2 for First-Stage Notch Filter
F[215:208]: Upper 8 Bits of Coefficient a_2 for First-Stage Notch Filter

Default value: 0000 0000

These bits are used to change the characteristics of the first-stage notch filter. See *Calculating Filter Coefficients* for details.

Registers 101–104

	B15	B14	B13	B12	B11	B10	B9	B8	B7	B6	B5	B4	B3	B2	B1	B0
Register 101	0	IDX6	IDX5	IDX4	IDX3	IDX2	IDX1	IDX0	S107	S106	S105	S104	S103	S102	S101	S100
Register 102	0	IDX6	IDX5	IDX4	IDX3	IDX2	IDX1	IDX0	S115	S114	S113	S112	S111	S110	S109	S108
Register 103	0	IDX6	IDX5	IDX4	IDX3	IDX2	IDX1	IDX0	S207	S206	S205	S204	S203	S202	S201	S200
Register 104	0	IDX6	IDX5	IDX4	IDX3	IDX2	IDX1	IDX0	S215	S214	S213	S212	S211	S210	S209	S208

IDX[6:0]: 110 0101b (65h) Register 101
IDX[6:0]: 110 0110b (66h) Register 102
IDX[6:0]: 110 0111b (67h) Register 103
IDX[6:0]: 110 1000b (68h) Register 104

S[107:100]: Lower 8 Bits of Coefficient a_1 for Second-Stage Notch Filter
S[115:108]: Upper 8 Bts of Coefficient a_1 for Second-Stage Notch Filter
S[207:200]: Lower 8 Bits of Coefficient a_2 for Second-Stage Notch Filter
S[215:208]: Upper 8 Bits of Coefficient a_2 for Second-Stage Notch Filter

Default value: 0000 0000

These bits are used to change the characteristics of the second-stage notch filter. See *Calculating Filter Coefficients* for details.

Copyright © 2007, Texas Instruments Incorporated

Calculating Filter Coefficients

The PCM1870 provides a dual-stage notch filter at the digital output of the ADC. The filter characteristics of each filter stage can be programmed. The characteristics are determined by calculating coefficients for three parameters, sampling frequency, center frequency and bandwidth, as shown in the following equations. All coefficients must be written as 2s-complement binary data into registers 97, 98, 99, 100, 101, 102, 103, and 104.

f_S = Sampling frequency [Hz]

f_C = Center frequency [Hz]

f_b = Bandwidth [Hz]

$$a_1 = -\left(1 + a_2\right)\cos\left(\frac{2\pi f_C}{f_S}\right)$$

$$a_2 = \frac{1 - \tan\left(\frac{2\pi f_b/f_S}{2}\right)}{1 + \tan\left(\frac{2\pi f_b/f_S}{2}\right)}$$

Register 124

	B15	B14	B13	B12	B11	B10	B9	B8	B7	B6	B5	B4	B3	B2	B1	B0
Register 124	0	IDX6	IDX5	IDX4	IDX3	IDX2	IDX1	IDX0	RSV	RSV	RSV	RSV	RSV	RSV	G12R	G12L

IDX[6:0]: 111 1100b (7Ch) Register 124

G12R: 12-dB Boost for PG2 (Gain Amplifier for AIN1R and AIN2R)
G12L: 12-dB Boost for PG1 (Gain Amplifier for AIN1L and AIN2L)

Default value: 0

These bits are used to boost the microphone signal when the analog input is small. See Register 90 for the detailed settings.

Copyright © 2007, Texas Instruments Incorporated

CONNECTION DIAGRAM

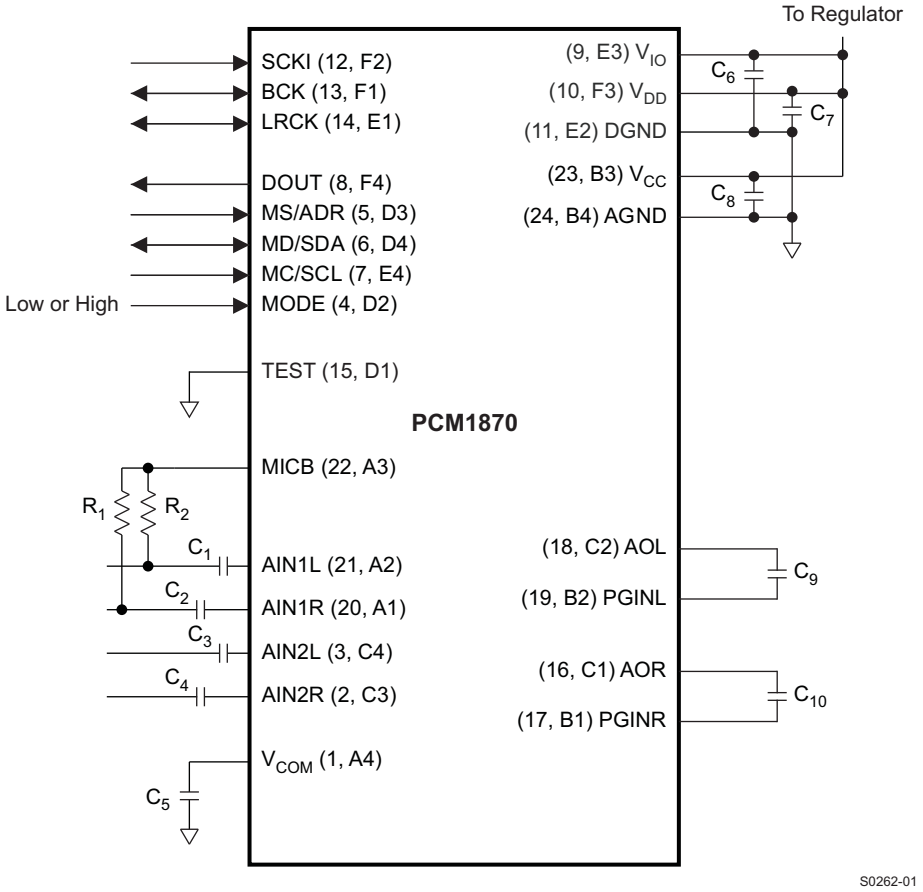

Figure 24. Connection Diagram

Table 10. Recommended External Parts

C_1–C_4	1 µF–10 µF	C_9, C_{10}	1 µF–10 µF
C_5	1 µF–4.7 µF	R_1, R_2	2.2 kΩ
C_6	0.1 µF		
C_7	1 µF		
C_8	1 µF–4.7 µF		

Copyright © 2007, Texas Instruments Incorporated

BOARD DESIGN AND LAYOUT CONSIDERATIONS

V_{CC}, V_{DD}, and V_{IO} Pins

The digital and analog power supply lines to the PCM1870 should be bypassed to the corresponding ground pins with 0.1- to 4.7-µF ceramic capacitors or electrolytic capacitors, placed as close to the pins as possible to maximize the dynamic performance of ADC.

AGND and DGND Pins

To maximize the dynamic performance of the PCM1870, the analog and digital grounds are not connected internally. These grounds should have very low impedance to avoid digital noise feeding back into the analog ground. So, they should be connected directly to each other under the part to reduce the potential of noise problems.

AIN1L, AIN1R, AIN2L, and AIN2R Pins

AIN1L, AIN1R, AIN2L, and AIN2R are single-ended inputs. AIN1L and AIN1R can also be used as a monaural differential input. The anti-aliasing low-pass filters are integrated on these inputs to remove the out-of-band noise from the audio. If the performance of these filters is not good enough for an application, appropriate external anti-aliasing filters are needed. The passive RC filter (100 Ω and 0.01 µF to 1 kΩ and 1000 pF) is used in general. Any pins that are not used in an application should be left open. Do not select open pins through register settings.

AOL, AOR, PGINL, and PGINR Pins

When AIN1L, AIN1R, AIN2L, and AIN2R pins are used as microphone inputs with high gain, AOL and AOR may have a large dc offset. It is recommended to locate a dc-blocking capacitor (1- to 10-µF capacitor) between AOL/AOR and PGINL/PGINR. If an application is not affected by dc offset, the PCM1870 does not need the capacitors.

V_{COM} Pin

1-µF to 4.7-µF capacitor is recommended between V_{COM} and AGND to ensure low source impedance for the ADC common voltage. This capacitor should be located as close as possible to the V_{COM} pin to reduce dynamic errors on the ADC common voltage.

BCK (Master Mode) and DOUT Pins

BCK in the master mode and DOUT have adequate load drive capability, but if the BCK and DOUT lines are long, locating a buffer near the PCM1870 and minimizing load capacitance is recommended in order to minimize crosstalk between digital and analog circuits, maximize the dynamic performance of the ADC, and reduce power consumption.

Copyright © 2007, Texas Instruments Incorporated

Changes from Original (May 2007) to Revision A **Page**

- Added new package in FEATURES section 1
- Added new package in DESCRIPTION section 1
- Added pinout for YZF package 5
- Inserted column in TERMINAL FUNCTIONS table for terminal numbers of YZF package 5
- Added pin numbers for YZF package to connection diagram 43

PACKAGING INFORMATION

Orderable part number	Status (1)	Material type (2)	Package | Pins	Package qty | Carrier	RoHS (3)	Lead finish/ Ball material (4)	MSL rating/ Peak reflow (5)	Op temp (°C)	Part marking (6)
PCM1870RHFR	Active	Production	VQFN (RHF) | 24	3000 | LARGE T&R	Yes	NIPDAU	Level-2-260C-1 YEAR	-40 to 85	1870
PCM1870RHFR.B	Active	Production	VQFN (RHF) | 24	3000 | LARGE T&R	Yes	NIPDAU	Level-2-260C-1 YEAR	-40 to 85	1870
PCM1870RHFT	Active	Production	VQFN (RHF) | 24	250 | SMALL T&R	Yes	NIPDAU	Level-2-260C-1 YEAR	-40 to 85	1870
PCM1870RHFT.B	Active	Production	VQFN (RHF) | 24	250 | SMALL T&R	Yes	NIPDAU	Level-2-260C-1 YEAR	-40 to 85	1870
PCM1870RHFTG4	Active	Production	VQFN (RHF) | 24	250 | SMALL T&R	Yes	NIPDAU	Level-2-260C-1 YEAR	-40 to 85	1870
PCM1870RHFTG4.B	Active	Production	VQFN (RHF) | 24	250 | SMALL T&R	Yes	NIPDAU	Level-2-260C-1 YEAR	-40 to 85	1870

(1) **Status:** For more details on status, see our product life cycle.

(2) **Material type:** When designated, preproduction parts are prototypes/experimental devices, and are not yet approved or released for full production. Testing and final process, including without limitation quality assurance, reliability performance testing, and/or process qualification, may not yet be complete, and this item is subject to further changes or possible discontinuation. If available for ordering, purchases will be subject to an additional waiver at checkout, and are intended for early internal evaluation purposes only. These items are sold without warranties of any kind.

(3) **RoHS values:** Yes, No, RoHS Exempt. See the TI RoHS Statement for additional information and value definition.

(4) **Lead finish/Ball material:** Parts may have multiple material finish options. Finish options are separated by a vertical ruled line. Lead finish/Ball material values may wrap to two lines if the finish value exceeds the maximum column width.

(5) **MSL rating/Peak reflow:** The moisture sensitivity level ratings and peak solder (reflow) temperatures. In the event that a part has multiple moisture sensitivity ratings, only the lowest level per JEDEC standards is shown. Refer to the shipping label for the actual reflow temperature that will be used to mount the part to the printed circuit board.

(6) **Part marking:** There may be an additional marking, which relates to the logo, the lot trace code information, or the environmental category of the part.

Multiple part markings will be inside parentheses. Only one part marking contained in parentheses and separated by a "~" will appear on a part. If a line is indented then it is a continuation of the previous line and the two combined represent the entire part marking for that device.

Important Information and Disclaimer: The information provided on this page represents TI's knowledge and belief as of the date that it is provided. TI bases its knowledge and belief on information provided by third parties, and makes no representation or warranty as to the accuracy of such information. Efforts are underway to better integrate information from third parties. TI has taken and continues to take reasonable steps to provide representative and accurate information but may not have conducted destructive testing or chemical analysis on incoming materials and chemicals. TI and TI suppliers consider certain information to be proprietary, and thus CAS numbers and other limited information may not be available for release.

In no event shall TI's liability arising out of such information exceed the total purchase price of the TI part(s) at issue in this document sold by TI to Customer on an annual basis.

TAPE AND REEL INFORMATION

REEL DIMENSIONS

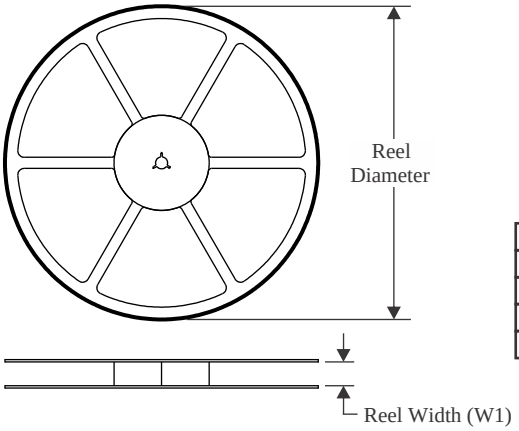

TAPE DIMENSIONS

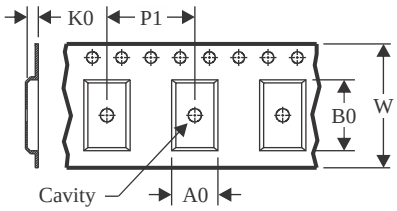

A0	Dimension designed to accommodate the component width
B0	Dimension designed to accommodate the component length
K0	Dimension designed to accommodate the component thickness
W	Overall width of the carrier tape
P1	Pitch between successive cavity centers

QUADRANT ASSIGNMENTS FOR PIN 1 ORIENTATION IN TAPE

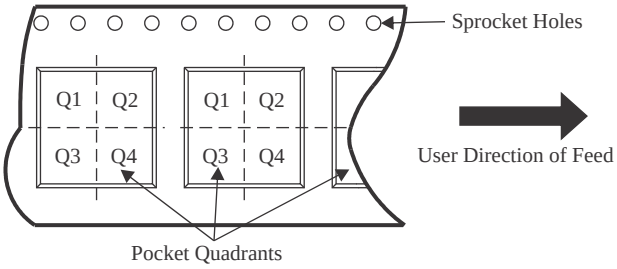

*All dimensions are nominal

Device	Package Type	Package Drawing	Pins	SPQ	Reel Diameter (mm)	Reel Width W1 (mm)	A0 (mm)	B0 (mm)	K0 (mm)	P1 (mm)	W (mm)	Pin1 Quadrant
PCM1870RHFR	VQFN	RHF	24	3000	330.0	12.4	4.3	5.3	1.3	8.0	12.0	Q1
PCM1870RHFT	VQFN	RHF	24	250	180.0	12.4	4.3	5.3	1.3	8.0	12.0	Q1
PCM1870RHFTG4	VQFN	RHF	24	250	180.0	12.4	4.3	5.3	1.3	8.0	12.0	Q1

TAPE AND REEL BOX DIMENSIONS

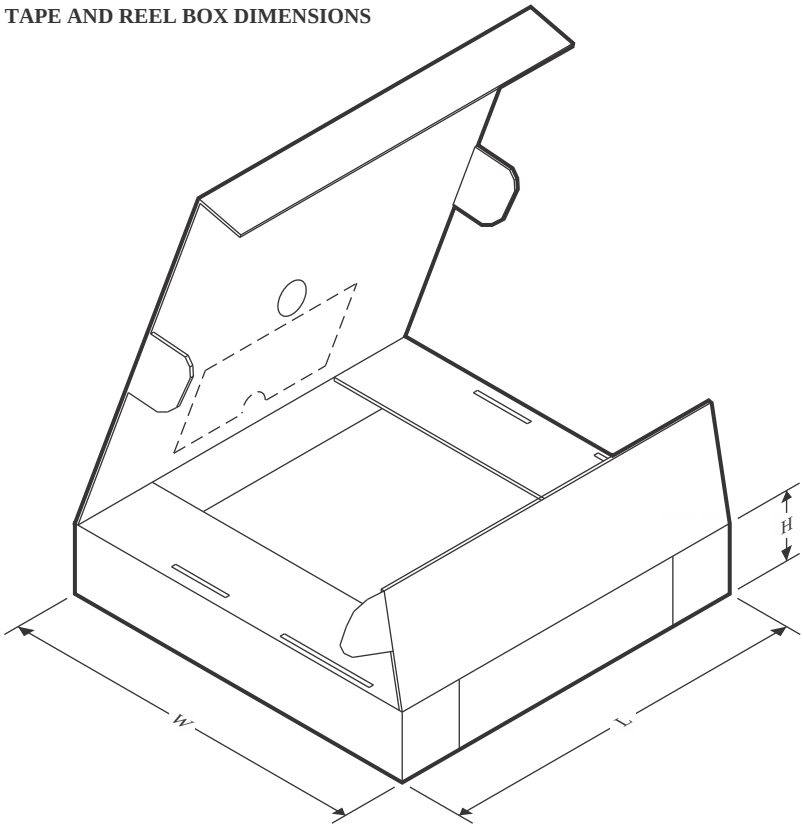

*All dimensions are nominal

Device	Package Type	Package Drawing	Pins	SPQ	Length (mm)	Width (mm)	Height (mm)
PCM1870RHFR	VQFN	RHF	24	3000	353.0	353.0	32.0
PCM1870RHFT	VQFN	RHF	24	250	213.0	191.0	35.0
PCM1870RHFTG4	VQFN	RHF	24	250	213.0	191.0	35.0

RHF0024A

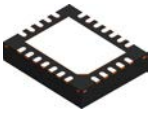

PACKAGE OUTLINE

VQFN - 1 mm max height

PLASTIC QUAD FLATPACK - NO LEAD

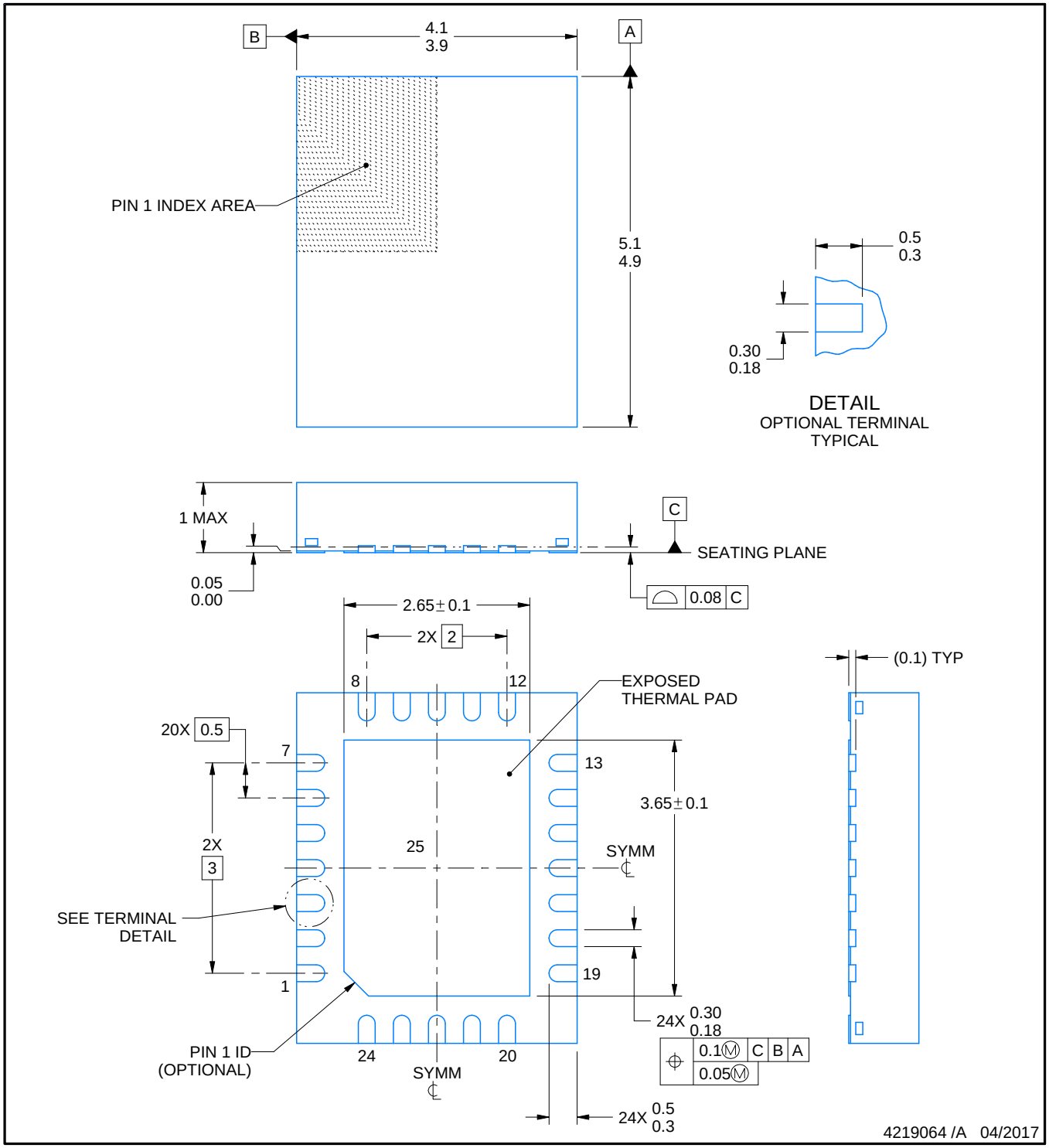

NOTES:

1. All linear dimensions are in millimeters. Any dimensions in parenthesis are for reference only. Dimensioning and tolerancing per ASME Y14.5M.
2. This drawing is subject to change without notice.
3. The package thermal pad must be soldered to the printed circuit board for thermal and mechanical performance.

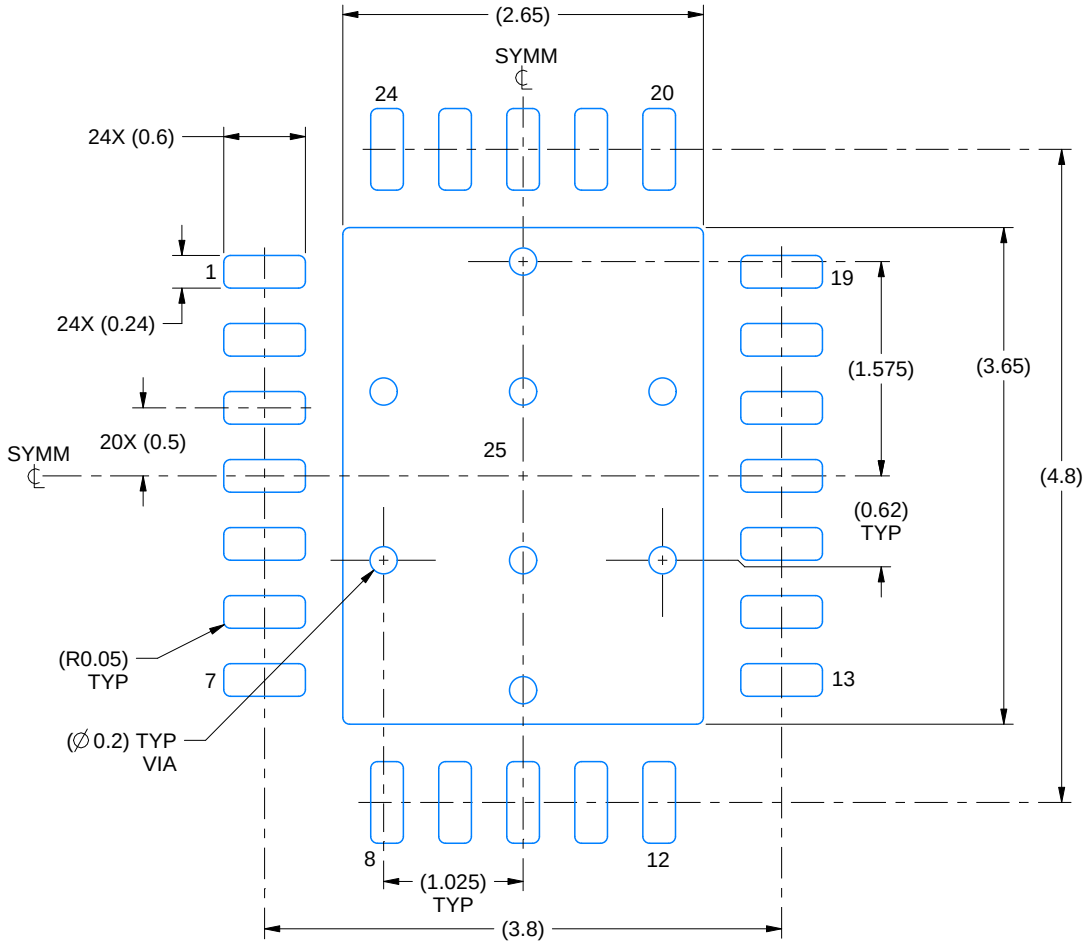

LAND PATTERN EXAMPLE
EXPOSED METAL SHOWN
SCALE:18X

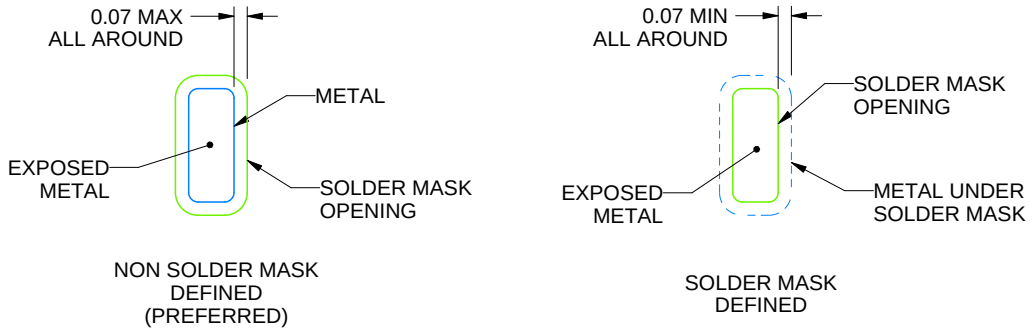

SOLDER MASK DETAILS

4219064 /A 04/2017

NOTES: (continued)

4. This package is designed to be soldered to a thermal pad on the board. For more information, see Texas Instruments literature number SLUA271 (www.ti.com/lit/slua271).
5. Vias are optional depending on application, refer to device data sheet. If any vias are implemented, refer to their locations shown on this view. It is recommended that vias under paste be filled, plugged or tented.

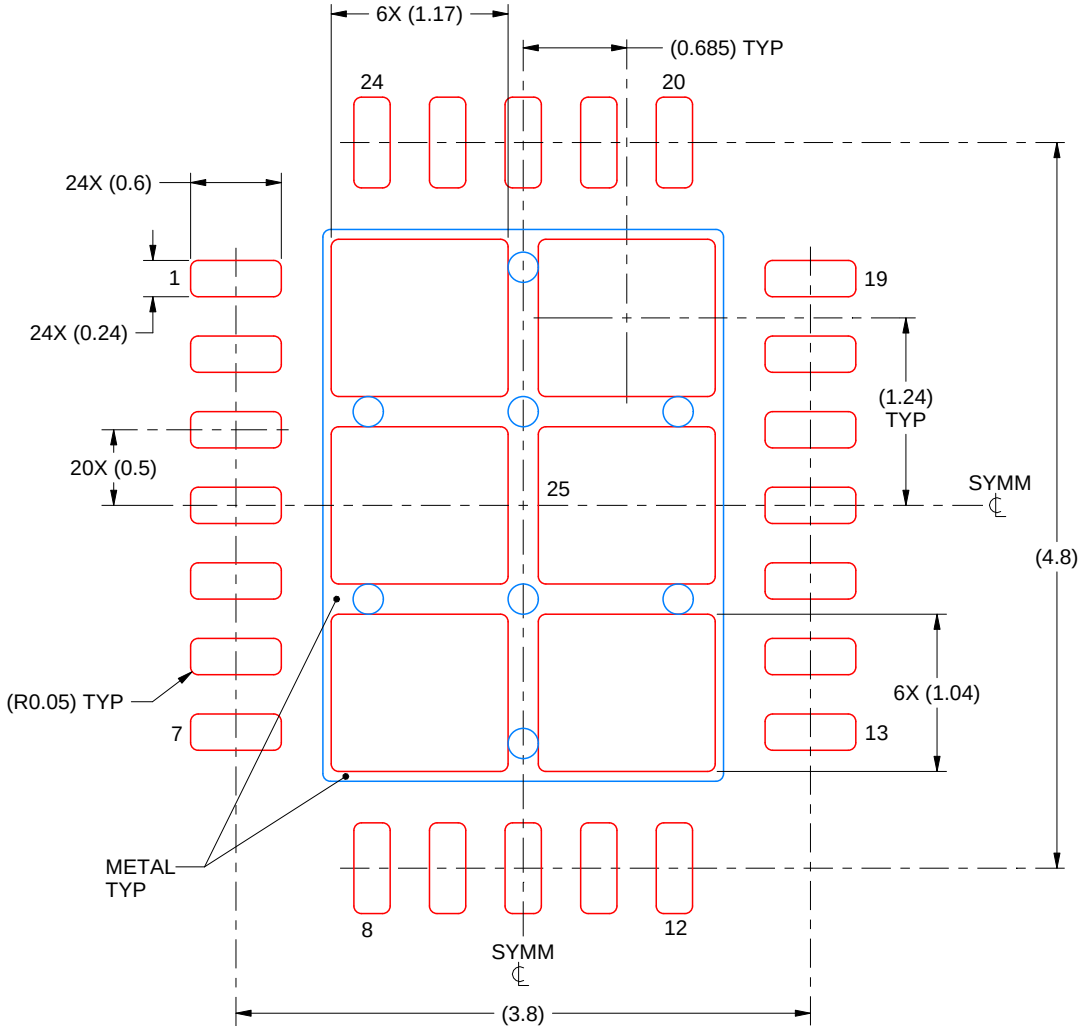

SOLDER PASTE EXAMPLE
BASED ON 0.125 mm THICK STENCIL

EXPOSED PAD 25
75% PRINTED SOLDER COVERAGE BY AREA UNDER PACKAGE
SCALE:20X

4219064 /A 04/2017

NOTES: (continued)

6. Laser cutting apertures with trapezoidal walls and rounded corners may offer better paste release. IPC-7525 may have alternate design recommendations.

IMPORTANT NOTICE AND DISCLAIMER

TI PROVIDES TECHNICAL AND RELIABILITY DATA (INCLUDING DATASHEETS), DESIGN RESOURCES (INCLUDING REFERENCE DESIGNS), APPLICATION OR OTHER DESIGN ADVICE, WEB TOOLS, SAFETY INFORMATION, AND OTHER RESOURCES “AS IS” AND WITH ALL FAULTS, AND DISCLAIMS ALL WARRANTIES, EXPRESS AND IMPLIED, INCLUDING WITHOUT LIMITATION ANY IMPLIED WARRANTIES OF MERCHANTABILITY, FITNESS FOR A PARTICULAR PURPOSE OR NON-INFRINGEMENT OF THIRD PARTY INTELLECTUAL PROPERTY RIGHTS.

These resources are intended for skilled developers designing with TI products. You are solely responsible for (1) selecting the appropriate TI products for your application, (2) designing, validating and testing your application, and (3) ensuring your application meets applicable standards, and any other safety, security, regulatory or other requirements.

These resources are subject to change without notice. TI grants you permission to use these resources only for development of an application that uses the TI products described in the resource. Other reproduction and display of these resources is prohibited. No license is granted to any other TI intellectual property right or to any third party intellectual property right. TI disclaims responsibility for, and you fully indemnify TI and its representatives against any claims, damages, costs, losses, and liabilities arising out of your use of these resources.

TI’s products are provided subject to TI’s Terms of Sale, TI’s General Quality Guidelines, or other applicable terms available either on ti.com or provided in conjunction with such TI products. TI’s provision of these resources does not expand or otherwise alter TI’s applicable warranties or warranty disclaimers for TI products. Unless TI explicitly designates a product as custom or customer-specified, TI products are standard, catalog, general purpose devices.

TI objects to and rejects any additional or different terms you may propose.

Copyright © 2026, Texas Instruments Incorporated

Last updated 10/2025