TLV702 300mA、低 I_Q、低压降稳压器

1 特性

- 极低压降：
  - 在 $I_{输出}$ = 50mA 并且 $V_{输出}$ = 2.8V 时，为 37mV
  - 在 $I_{输出}$ = 100mA 并且 $V_{输出}$ = 2.8V 时，为 75mV
  - 在 I_{OUT} = 300mA，V_{OUT} = 2.8V 时，电压为 220mV
- 精度 2%
- 低 I_Q：35μA
- 可提供从 1.2V 至 4.8V 的固定输出电压组合
- 高电源抑制比 (PSRR)：频率 1kHz 时为 68dB
- 可在采用 0.1 μF[(1)] 的有效电容时保持稳定
- 热关断保护和过流保护
- 封装：5 引脚 SOT-23 封装和 1.5mm × 1.5mm 6 引脚 WSON 封装

(1) 请参阅*应用信息*中的*输入和输出电容器要求*。

2 应用

- 无线手持终端
- 智能手机
- ZigBee®网络
- *Bluetooth*®器件
- 锂离子电池供电手持设备产品
- WLAN 和其他 PC 附加卡

3 说明

TLV702 系列低压降 (LDO) 线性稳压器是具有出色线路和负载瞬态性能的低静态电流器件。这些 LDO 专为功耗敏感型 应用中节省电路板空间。高精度带隙与误差放大器可提供 2% 的总精度。低输出噪声、极高电源抑制比 (PSRR) 和低压降电压使得这个器件成为广泛电池供电手持设备的理想选择。所有器件版本具有热关断和电流限值以保证安全。

此外，这些器件在有效输出电容只有 0.1μF 时保持稳定。这一特性允许使用具有较高偏置电压和温度降额的成本效益型电容器。这些器件在不产生输出负载的情况下可调节至特定的精度。

TLV702P 系列还可提供有源下拉电路，用于对输出进行快速放电。

TLV702 系列 LDO 线性稳压器采用 SOT23-5 和 1.5mm × 1.5mm WSON-6 封装。

器件信息[(1)]

器件型号	封装	封装尺寸（标称值）
TLV702	SOT-23 (5)	2.90mm × 1.60mm
	WSON (6)	1.50mm × 1.50mm

(1) 如需了解所有可用封装，请参阅数据表末尾的可订购产品附录。

典型应用电路

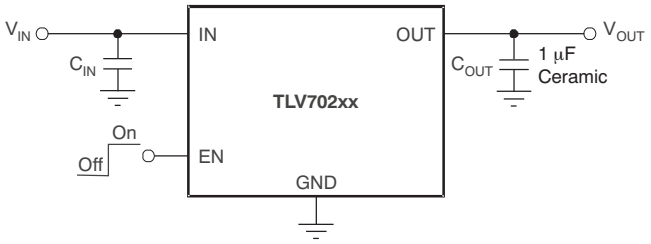

本文档旨在为方便起见，提供有关 TI 产品中文版本的信息，以确认产品的概要。 有关适用的官方英文版本的最新信息，请访问 www.ti.com，其内容始终优先。 TI 不保证翻译的准确性和有效性。 在实际设计之前，请务必参考最新版本的英文版本。

目录

1 特性 ... 1
2 应用 ... 1
3 说明 ... 1
4 修订历史记录 ... 2
5 **Pin Configuration and Functions** ... 3
6 **Specifications** ... 4
6.1 Absolute Maximum Ratings ... 4
6.2 ESD Ratings ... 4
6.3 Recommended Operating Conditions ... 4
6.4 Thermal Information ... 4
6.5 Electrical Characteristics ... 5
6.6 Typical Characteristics ... 6
7 **Detailed Description** ... 10
7.1 Overview ... 10
7.2 Functional Block Diagrams ... 10
7.3 Feature Description ... 11
7.4 Device Functional Modes ... 12
8 **Application and Implementation** ... 13
8.1 Application Information ... 13
8.2 Typical Application ... 13
9 **Power Supply Recommendations** ... 15
9.1 Power Dissipation ... 15
10 **Layout** ... 15
10.1 Layout Guidelines ... 15
10.2 Layout Examples ... 16
11 器件和文档支持 ... 17
11.1 器件支持 ... 17
11.2 文档支持 ... 17
11.3 接收文档更新通知 ... 17
11.4 社区资源 ... 17
11.5 商标 ... 17
11.6 静电放电警告 ... 17
11.7 Glossary ... 18
12 机械、封装和可订购信息 ... 18

4 修订历史记录

注：之前版本的页码可能与当前版本有所不同。

Changes from Revision C (March 2015) to Revision D — **Page**

- Changed OUT pin number from 5 to 3 for WSON package ... 3
- Added footnote to maximum EN voltage specification ... 4
- Added parameter names to *Recommended Operating Conditions* table ... 4

Changes from Revision B (February 2011) to Revision C — **Page**

- 已添加 *添加了 ESD 额定值* 表、*特性 说明* 部分、*器件功能模式*、*应用和实施* 部分、*电源建议* 部分、*布局* 部分、*器件和文档支持* 部分以及*机械、封装和可订购信息* 部分 ... 1
- Changed Pin Configuration and Functions section; updated table format ... 3
- Deleted *Ordering Information* table ... 3
- Changed "free-air temperature" to "junction temperature" in *Absolute Maximum Ratings* condition statement ... 4
- Changed *Thermal Information* table; updated thermal resistance values for all packages ... 4
- Deleted *Dissipation Ratings* table ... 4
- Changed V_{DO} dropout voltage test conditions; deleted I_{OUT} = 50 mA and I_{OUT} = 100 mA with V_{OUT} = 2.8 V test parameters ... 5
- Deleted *EVM Dissipation Ratings* table ... 16

Changes from Revision A (October 2010) to Revision B — **Page**

- 向数据表中添加了 SON-6 (DSE) 封装和相关基准 ... 1

Copyright © 2010–2019, Texas Instruments Incorporated

5 Pin Configuration and Functions

DBV Package
5-Pin SOT-23
Top View

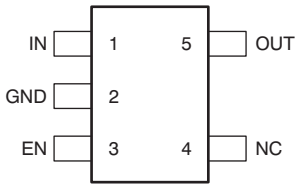

DSE Package
6-Pin WSON
Top View

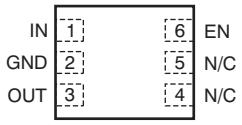

Pin Functions

PIN			I/O	DESCRIPTION
NAME	SOT-23	WSON		
IN	1	1	I	Input pin. A small, 1-μF ceramic capacitor is recommended from this pin to ground to assure stability and good transient performance. See *Input and Output Capacitor Requirements* in *Application Information* for more details.
GND	2	2	—	Ground pin
EN	3	6	I	Enable pin. Driving EN over 0.9 V turns on the regulator. Driving EN below 0.4 V puts the regulator into shutdown mode and reduces operating current to 1 μA, nominal. For TLV702P, output voltage is discharged through an internal 120-Ω resistor when device is shut down.
NC	4	4, 5	—	No connection. This pin can be tied to ground to improve thermal dissipation.
OUT	5	3	O	Regulated output voltage pin. A small, 1-μF ceramic capacitor is needed from this pin to ground to assure stability. See *Input and Output Capacitor Requirements* in *Application Information* for more details.

Copyright © 2010–2019, Texas Instruments Incorporated

6 Specifications

6.1 Absolute Maximum Ratings

over operating junction temperature range (unless otherwise noted)[1]

		MIN	MAX	UNIT
Voltage[2]	IN	–0.3	6	V
	EN	–0.3	6[3]	
	OUT	–0.3	6	
Current (source)	OUT	Internally limited		
Output short-circuit duration		Indefinite		
Total continuous power dissipation		See *Thermal Information*		
Temperature	Operating virtual junction, T_J	–55	150	°C
	Storage, T_{stg}	–55	150	

(1) Stresses beyond those listed under *Absolute Maximum Ratings* may cause permanent damage to the device. These are stress ratings only, and functional operation of the device at these or any other conditions beyond those indicated under *Recommended Operating Conditions* is not implied. Exposure to absolute-maximum-rated conditions for extended periods my affect device reliability.
(2) All voltages are with respect to network ground terminal.
(3) The absolute maximum rating is V_{IN} + 0.3 V or 6.0 V, whichever is smaller.

6.2 ESD Ratings

			VALUE	UNIT
$V_{(ESD)}$	Electrostatic discharge	Human body model (HBM), per ANSI/ESDA/JEDEC JS-001, all pins[1]	±2000	V
		Charged device model (CDM), per JEDEC specification JESD22-C101, all pins[2]	±500	

(1) JEDEC document JEP155 states that 500-V HBM allows safe manufacturing with a standard ESD control process.
(2) JEDEC document JEP157 states that 250-V CDM allows safe manufacturing with a standard ESD control process.

6.3 Recommended Operating Conditions

over operating free-air temperature range (unless otherwise noted).

		MIN	NOM	MAX	UNIT
V_{IN}	Input voltage	2		5.5	V
V_{OUT}	Output voltage	1.2		4.8	V
I_{OUT}	Output current	0		300	mA

6.4 Thermal Information

THERMAL METRIC[1]		TLV702		UNIT
		DBV (SOT-23)	DSE (WSON)	
		5 PINS	6 PINS	
$R_{\theta JA}$	Junction-to-ambient thermal resistance	249.2	321.3	°C/W
$R_{\theta JC(top)}$	Junction-to-case (top) thermal resistance	136.4	207.9	°C/W
$R_{\theta JB}$	Junction-to-board thermal resistance	85.9	281.5	°C/W
ψ_{JT}	Junction-to-top characterization parameter	19.5	42.4	°C/W
ψ_{JB}	Junction-to-board characterization parameter	85.3	284.8	°C/W
$R_{\theta JC(bot)}$	Junction-to-case (bottom) thermal resistance	N/A	142.3	°C/W

(1) For more information about traditional and new thermal metrics, see the *Semiconductor and IC Package Thermal Metrics* application report.

Copyright © 2010–2019, Texas Instruments Incorporated

6.5 Electrical Characteristics

At $V_{IN} = V_{OUT(nom)} + 0.5$ V or 2 V (whichever is greater); $I_{OUT} = 10$ mA, $V_{EN} = 0.9$ V, $C_{OUT} = 1$ µF, and $T_J = –40°C$ to +125°C, unless otherwise noted. Typical values are at $T_J = 25°C$.

PARAMETER		TEST CONDITIONS	MIN	TYP	MAX	UNIT
V_{IN}	Input voltage range		2		5.5	V
V_{OUT}	DC output accuracy	$–40°C \le T_J \le 125°C$	–2%	0.5%	2%	
$\Delta V_{OUT(\Delta VIN)}$	Line regulation	$V_{OUT(nom)} + 0.5\ V \le V_{IN} \le 5.5\ V$, $I_{OUT} = 10$ mA		1	5	mV
$\Delta V_{OUT(\Delta IOUT)}$	Load regulation	$0\ mA \le I_{OUT} \le 300$ mA		1	15	mV
V_{DO}	Dropout voltage (1)	$V_{IN} = 0.98 \times V_{OUT(nom)}$, $I_{OUT} = 300$ mA		260	375	mV
I_{CL}	Output current limit	$V_{OUT} = 0.9 \times V_{OUT(nom)}$	320	500	860	mA
I_{GND}	Ground pin current	$I_{OUT} = 0$ mA		35	55	µA
		$I_{OUT} = 300$ mA, $V_{IN} = V_{OUT} + 0.5$ V		370		µA
I_{SHDN}	Ground pin current (shutdown)	$V_{EN} \le 0.4$ V, $V_{IN} = 2$ V		400		nA
		$V_{EN} \le 0.4$ V, $2\ V \le V_{IN} \le 4.5$ V, $T_J = –40°C$ to +85°C		1	2	µA
PSRR	Power-supply rejection ratio	$V_{IN} = 2.3$ V, $V_{OUT} = 1.8$ V, $I_{OUT} = 10$ mA, f = 1 kHz		68		dB
V_n	Output noise voltage	BW = 100 Hz to 100 kHz, $V_{IN} = 2.3$ V, $V_{OUT} = 1.8$ V, $I_{OUT} = 10$ mA		48		μV_{RMS}
t_{STR}	Start-up time (2)	$C_{OUT} = 1$ µF, $I_{OUT} = 300$ mA		100		µs
$V_{EN(high)}$	Enable pin high (enabled)		0.9		V_{IN}	V
$V_{EN(low)}$	Enable pin low (disabled)		0		0.4	V
I_{EN}	Enable pin current	$V_{IN} = V_{EN} = 5.5$ V		0.04		µA
UVLO	Undervoltage lockout	V_{IN} rising		1.9		V
$R_{DISCHARGE}$	Active pulldown resistance (TLV702P only)	$V_{EN} = 0$ V		120		Ω
T_{sd}	Thermal shutdown temperature	Shutdown, temperature increasing		165		°C
		Reset, temperature decreasing		145		°C
T_J	Operating junction temperature		–40		125	°C

(1) V_{DO} is measured for devices with $V_{OUT(nom)} \ge 2.35$ V.
(2) Start-up time = time from EN assertion to $0.98 \times V_{OUT(nom)}$.

Copyright © 2010–2019, Texas Instruments Incorporated

6.6 Typical Characteristics

Over operating temperature range (T_J = –40°C to +125°C), V_{IN} = $V_{OUT(nom)}$ + 0.5 V or 2 V, whichever is greater; I_{OUT} = 10 mA, V_{EN} = V_{IN}, C_{OUT} = 1 µF, unless otherwise noted. Typical values are at T_J = 25°C.

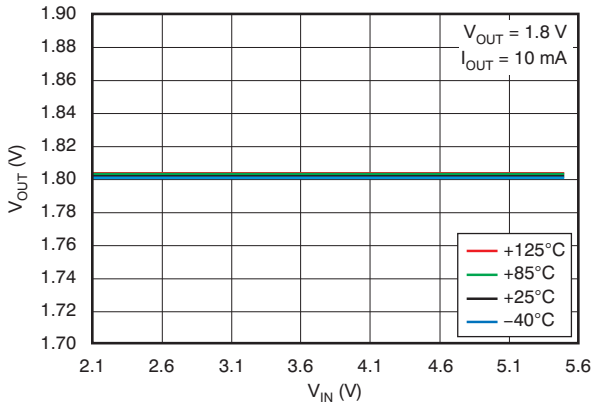

Figure 1. Line Regulation

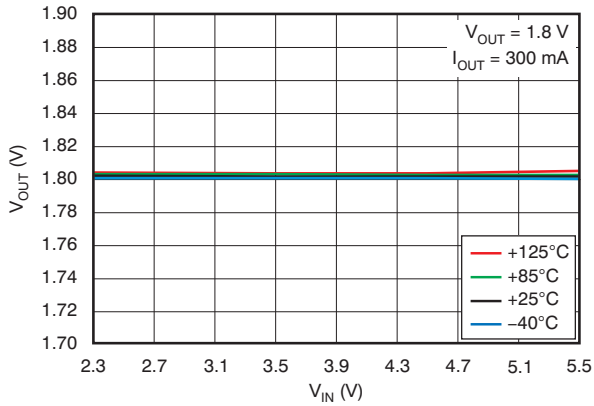

Figure 2. Line Regulation

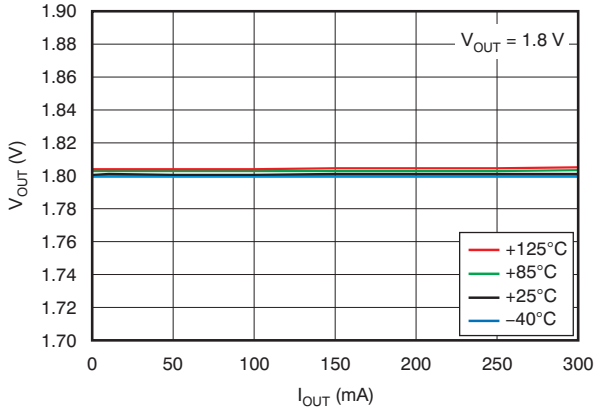

Figure 3. Load Regulation

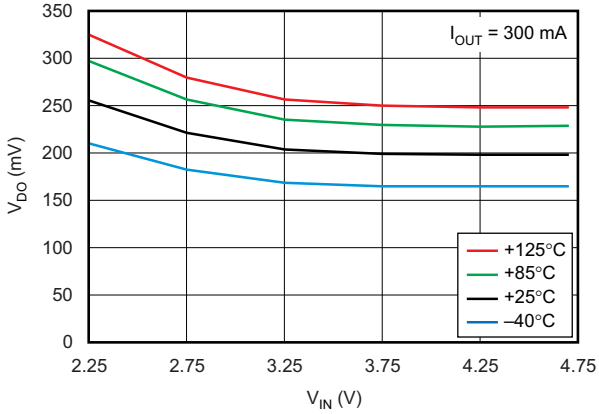

Figure 4. Dropout Voltage vs Input Voltage

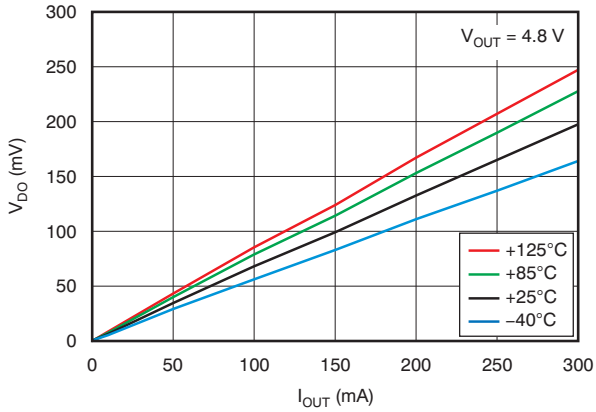

Figure 5. Dropout Voltage vs Output Current

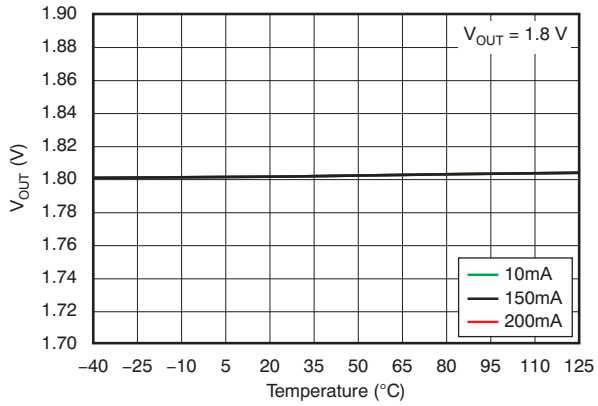

Figure 6. Output Voltage vs Temperature

Copyright © 2010–2019, Texas Instruments Incorporated

Typical Characteristics (continued)

Over operating temperature range (T_J = –40°C to +125°C), V_{IN} = $V_{OUT(nom)}$ + 0.5 V or 2 V, whichever is greater; I_{OUT} = 10 mA, V_{EN} = V_{IN}, C_{OUT} = 1 µF, unless otherwise noted. Typical values are at T_J = 25°C.

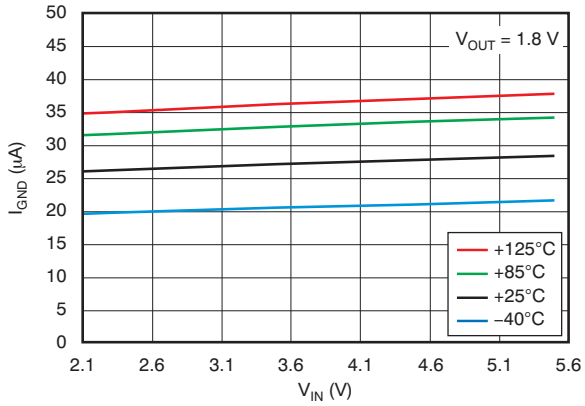

Figure 7. Ground Pin Current vs Input Voltage

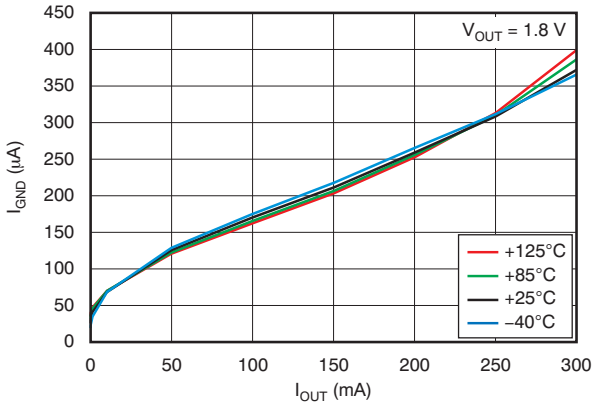

Figure 8. Ground Pin Current vs Load

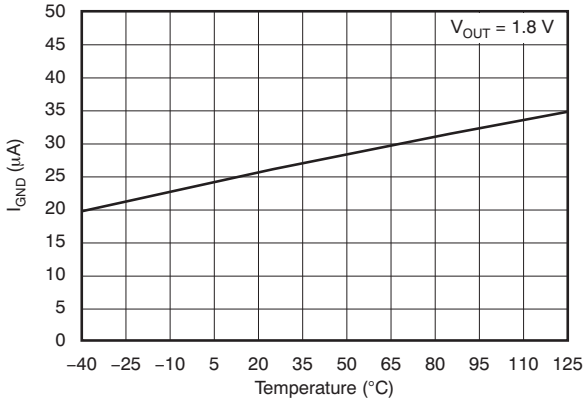

Figure 9. Ground Pin Current vs Temperature

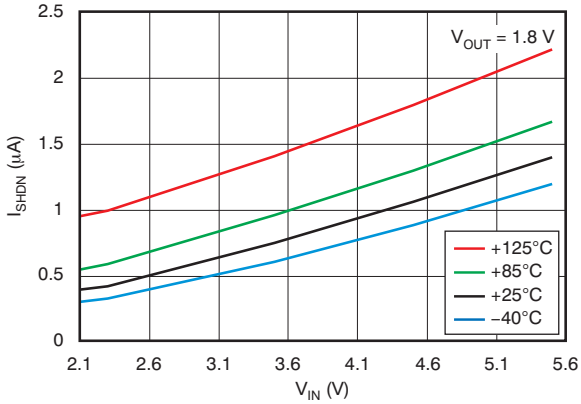

Figure 10. Shutdown Current vs Input Voltage

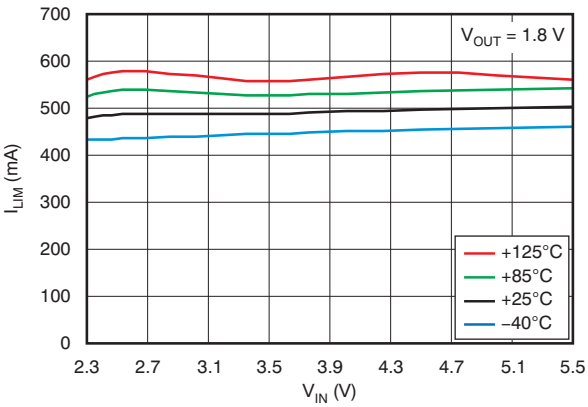

Figure 11. Current Limit vs Input Voltage

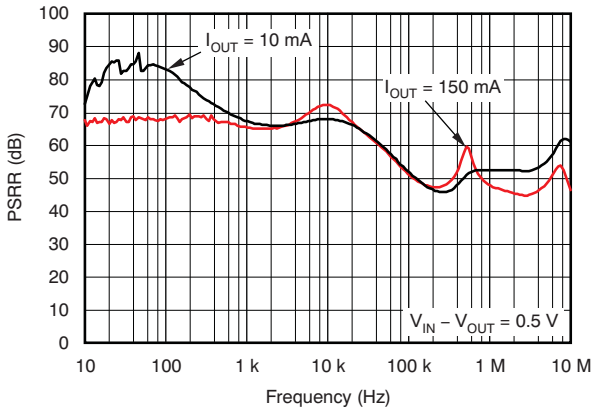

Figure 12. Power-Supply Ripple Rejection vs Frequency

Typical Characteristics (continued)

Over operating temperature range (T_J = –40°C to +125°C), V_{IN} = $V_{OUT(nom)}$ + 0.5 V or 2 V, whichever is greater; I_{OUT} = 10 mA, V_{EN} = V_{IN}, C_{OUT} = 1 µF, unless otherwise noted. Typical values are at T_J = 25°C.

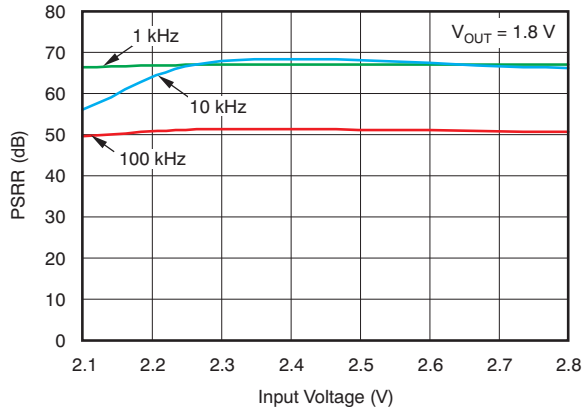

Figure 13. Power-Supply Ripple Rejection vs Input Voltage

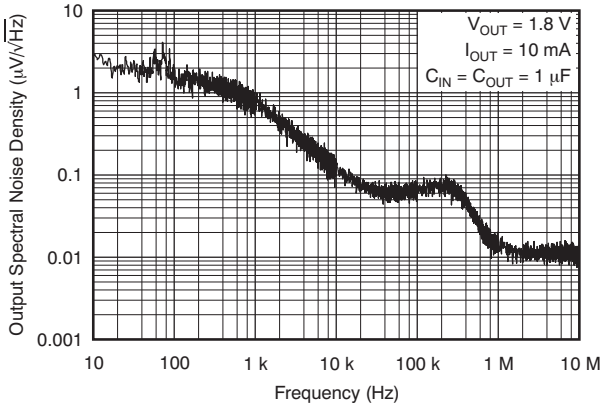

Figure 14. Output Spectral Noise Density vs Frequency

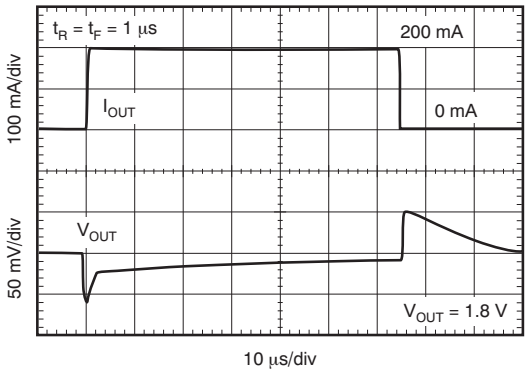

Figure 15. Load Transient Response

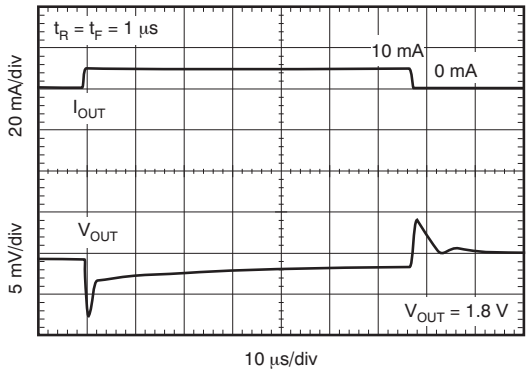

Figure 16. Load Transient Response

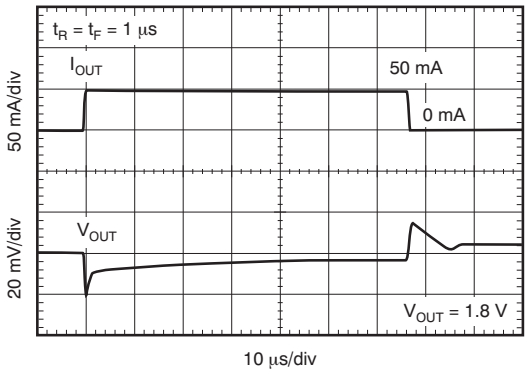

Figure 17. Load Transient Response

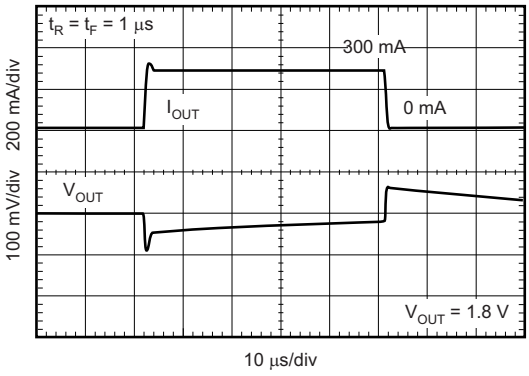

Figure 18. Load Transient Response

Copyright © 2010–2019, Texas Instruments Incorporated

Typical Characteristics (continued)

Over operating temperature range (T_J = –40°C to +125°C), V_{IN} = $V_{OUT(nom)}$ + 0.5 V or 2 V, whichever is greater; I_{OUT} = 10 mA, V_{EN} = V_{IN}, C_{OUT} = 1 µF, unless otherwise noted. Typical values are at T_J = 25°C.

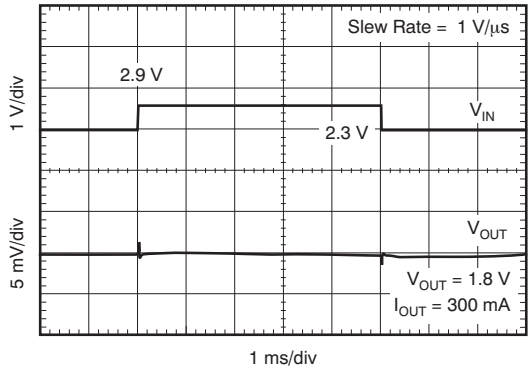

Figure 19. Line Transient Response

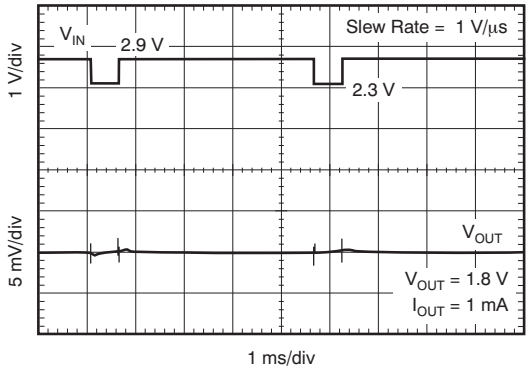

Figure 20. Line Transient Response

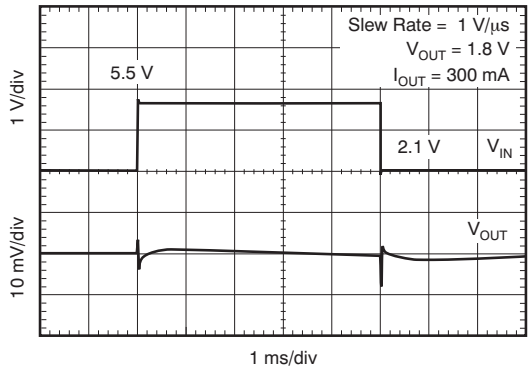

Figure 21. Line Transient Response

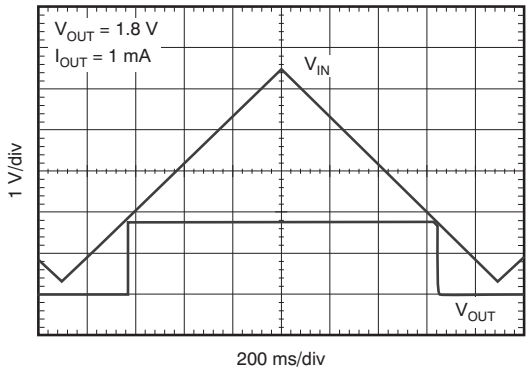

Figure 22. V_{IN} Ramp Up, Ramp Down Response

7 Detailed Description

7.1 Overview

The TLV702 series of low-dropout (LDO) linear regulators are low quiescent current devices with excellent line and load transient performance. These LDOs are designed for power-sensitive applications. A precision bandgap and error amplifier provides overall 2% accuracy. Low output noise, very high power-supply rejection ratio (PSRR), and low dropout voltage make this series of devices ideal for most battery-operated handheld equipment. All device versions have integrated thermal shutdown, current limit, and undervoltage lockout (UVLO).

7.2 Functional Block Diagrams

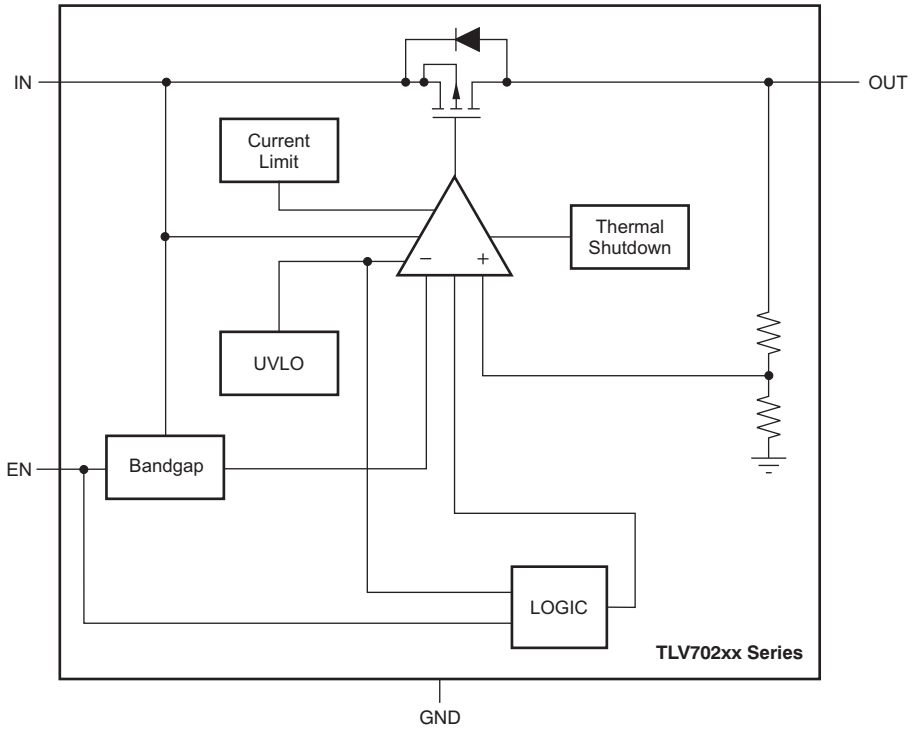

Figure 23. TLV702 Block Diagram

Copyright © 2010–2019, Texas Instruments Incorporated

Functional Block Diagrams (continued)

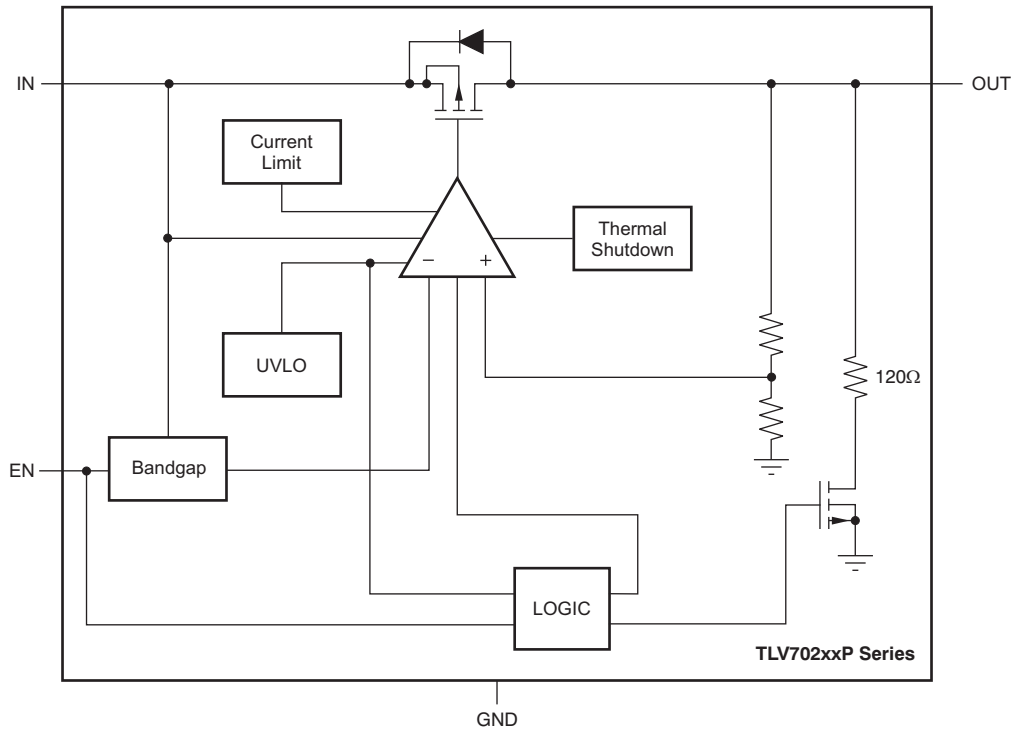

Figure 24. TLV702P Block Diagram

7.3 Feature Description

7.3.1 Internal Current Limit

The TLV702 internal current limit helps to protect the regulator during fault conditions. During current limit, the output sources a fixed amount of current that is largely independent of the output voltage. In such a case, the output voltage is not regulated, and is $V_{OUT} = I_{CL} \times R_{LOAD}$. The PMOS pass transistor dissipates $(V_{IN} - V_{OUT}) \times I_{CL}$ until thermal shutdown is triggered and the device turns off. As the device cools, it is turned on by the internal thermal shutdown circuit. If the fault condition continues, the device cycles between current limit and thermal shutdown. See *Thermal Consideration* for more details.

The PMOS pass element in the TLV702 has a built-in body diode that conducts current when the voltage at OUT exceeds the voltage at IN. This current is not limited, so if extended reverse voltage operation is anticipated, external limiting to 5% of the rated output current is recommended.

7.3.2 Shutdown

The enable pin (EN) is active high. The device is enabled when voltage at EN pin goes above 0.9 V. The device is turned off when the EN pin is held at less than 0.4 V. When shutdown capability is not required, EN can be connected to the IN pin.

The TLV702P version has internal active pulldown circuitry that discharges the output with a time constant of:

$$\tau = \frac{(120 \bullet R_L)}{(120 + R_L)} \bullet C_{OUT} \quad (1)$$

where:

- R_L = Load resistance
- C_{OUT} = Output capacitor

Feature Description (continued)

7.3.3 Dropout Voltage

The TLV702 uses a PMOS pass transistor to achieve low dropout. When (V_{IN} – V_{OUT}) is less than the dropout voltage (V_{DO}), the PMOS pass device is in the linear (triode) region of operation and the input-to-output resistance is the $R_{DS(on)}$ of the PMOS pass element. V_{DO} scales approximately with output current because the PMOS device behaves as a resistor in dropout.

As with any linear regulator, PSRR and transient response are degraded as (V_{IN} – V_{OUT}) approaches dropout. This effect is shown in Figure 13.

7.3.4 Undervoltage Lockout

The TLV702 uses a UVLO circuit to keep the output shut off until internal circuitry is operating properly.

7.4 Device Functional Modes

7.4.1 Normal Operation

The device regulates to the nominal output voltage under the following conditions:

- The input voltage is greater than the nominal output voltage added to the dropout voltage.
- The output current is less than the current limit.
- The input voltage is greater than the UVLO voltage.

7.4.2 Dropout Operation

If the input voltage is lower than the nominal output voltage plus the specified dropout voltage, but all other conditions are met for normal operation, the device operates in dropout mode. In this condition, the output voltage is the same as the input voltage minus the dropout voltage. The transient performance of the device is significantly degraded because the pass device is in a triode state and no longer regulates the output voltage of the LDO. Line or load transients in dropout may result in large output voltage deviations.

Table 1 lists the conditions that lead to the different modes of operation.

Table 1. Device Functional Mode Comparison

OPERATING MODE	PARAMETER	
	V_{IN}	I_{OUT}
Normal mode	$V_{IN} > V_{OUT\ (nom)} + V_{DO}$	$I_{OUT} < I_{CL}$
Dropout mode	$V_{IN} < V_{OUT\ (nom)} + V_{DO}$	$I_{OUT} < I_{CL}$
Current limit	V_{IN} > UVLO	$I_{OUT} > I_{CL}$

Copyright © 2010–2019, Texas Instruments Incorporated

8 Application and Implementation

NOTE

Information in the following applications sections is not part of the TI component specification, and TI does not warrant its accuracy or completeness. TI's customers are responsible for determining suitability of components for their purposes. Customers should validate and test their design implementation to confirm system functionality.

8.1 Application Information

The TLV702 belongs to a new family of next-generation value LDO regulators. These devices consume low quiescent current and deliver excellent line and load transient performance. These characteristics, combined with low noise and very good PSRR with little (V_{IN} – V_{OUT}) headroom, make this family of devices ideal for portable RF applications. This family of regulators offers current limit and thermal protection, and is specified from –40°C to +125°C.

8.2 Typical Application

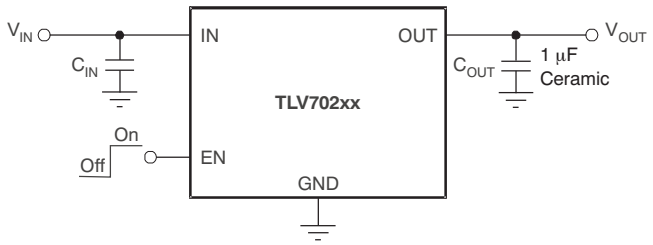

Figure 25. Typical Application Circuit

8.2.1 Design Requirements

Table 2 lists the design parameters.

Table 2. Design Parameters

PARAMETER	DESIGN REQUIREMENT
Input voltage	2.5 V to 3.3 V
Output voltage	1.8 V
Output current	100 mA

8.2.2 Detailed Design Procedure

8.2.2.1 Input and Output Capacitor Requirements

1-µF X5R- and X7R-type ceramic capacitors are recommended because these capacitors have minimal variation in value and equivalent series resistance (ESR) overtemperature.

However, the TLV702 is designed to be stable with an *effective capacitance* of 0.1 µF or larger at the output. Thus, the device is stable with capacitors of other dielectric types as well, as long as the effective capacitance under operating bias voltage and temperature is greater than 0.1 µF. This effective capacitance refers to the capacitance that the LDO sees under operating bias voltage and temperature conditions; that is, the capacitance after taking both bias voltage and temperature derating into consideration. In addition to allowing the use of lower-cost dielectrics, this capability of being stable with 0.1-µF effective capacitance also enables the use of smaller footprint capacitors that have higher derating in size- and space-constrained applications.

Using a 0.1-µF rated capacitor at the output of the LDO does not ensure stability because the effective capacitance under the specified operating conditions must not be less than 0.1 µF. Maximum ESR should be less than 200 mΩ.

Copyright © 2010–2019, Texas Instruments Incorporated

Although an input capacitor is not required for stability, it is good analog design practice to connect a 0.1-μF to 1-μF, low ESR capacitor across the IN pin and GND pin of the regulator. This capacitor counteracts reactive input sources and improves transient response, noise rejection, and ripple rejection. A higher-value capacitor may be necessary if large, fast rise-time load transients are anticipated, or if the device is not located close to the power source. If source impedance is more than 2 Ω, a 0.1-μF input capacitor may be necessary to ensure stability.

8.2.2.2 Transient Response

As with any regulator, increasing the size of the output capacitor reduces overshoot and undershoot magnitude but increases the duration of the transient response.

8.2.3 Application Curves

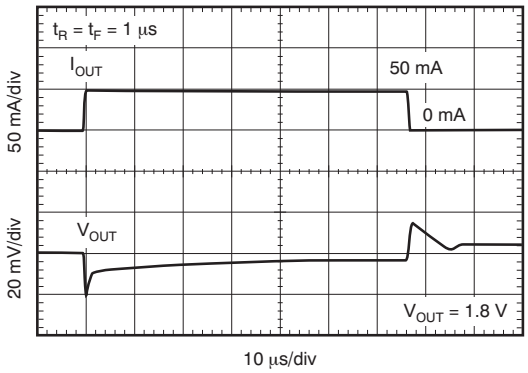

Figure 26. Load Transient Response

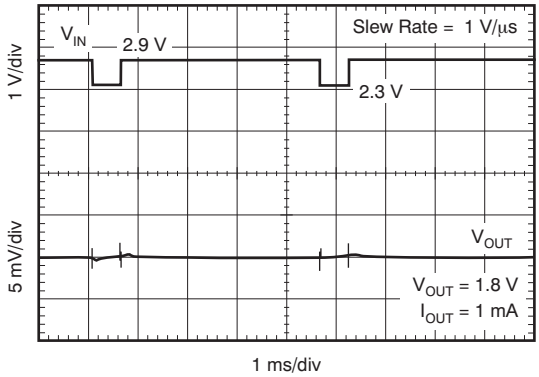

Figure 27. Line Transient Response

Copyright © 2010–2019, Texas Instruments Incorporated

9 Power Supply Recommendations

Connect a low output impedance power supply directly to the INPUT pin of the TLV702. Inductive impedances between the input supply and the INPUT pin can create significant voltage excursions at the INPUT pin during start-up or load transient events.

9.1 Power Dissipation

The ability to remove heat from the die is different for each package type, presenting different considerations in the printed-circuit-board (PCB) layout. The PCB area around the device that is free of other components moves the heat from the device to the ambient air.

Refer to *Thermal Information* for thermal performance on the TLV702 evaluation module (EVM). The EVM is a two-layer board with two ounces of copper per side.

Power dissipation depends on input voltage and load conditions. Power dissipation (P_D) is equal to the product of the output current and the voltage drop across the output pass element, as shown in Equation 2.

$$P_D = (V_{IN} - V_{OUT}) \times I_{OUT} \tag{2}$$

10 Layout

10.1 Layout Guidelines

Input and output capacitors should be placed as close to the device pins as possible. To improve AC performance such as PSRR, output noise, and transient response, TI recommends designing the board with separate ground planes for V_{IN} and V_{OUT}, with the ground plane connected only at the GND pin of the device. In addition, the ground connection for the output capacitor should be connected directly to the GND pin of the device. High ESR capacitors may degrade PSRR performance.

10.1.1 Thermal Consideration

Thermal protection disables the output when the junction temperature rises to approximately 165°C, allowing the device to cool. When the junction temperature cools to approximately 145°C, the output circuitry is again enabled. Depending on power dissipation, thermal resistance, and ambient temperature, the thermal protection circuit may cycle on and off. This cycling limits the dissipation of the regulator, protecting it from damage as a result of overheating.

Any tendency to activate the thermal protection circuit indicates excessive power dissipation or an inadequate heatsink. For reliable operation, junction temperature should be limited to 125°C maximum.

To estimate the margin of safety in a complete design (including heatsink), increase the ambient temperature until the thermal protection is triggered; use worst-case loads and signal conditions.

The internal protection circuitry of the TLV702 has been designed to protect against overload conditions. It was not intended to replace proper heatsinking. Continuously running the TLV702 into thermal shutdown degrades device reliability.

Copyright © 2010–2019, Texas Instruments Incorporated

Layout Guidelines (continued)

10.1.2 Package Mounting

Solder pad footprint recommendations for the TLV702 are available from the TI website at www.ti.com. The recommended land pattern for the DBV and DSE packages are shown in Figure 28 and Figure 29, respectively.

10.2 Layout Examples

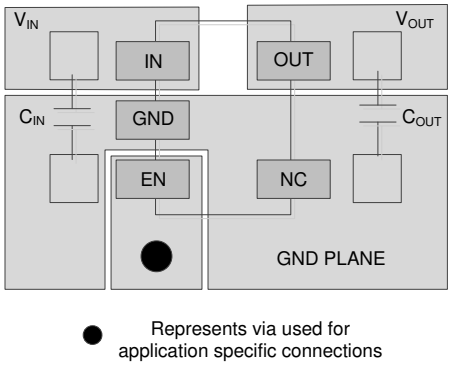

Figure 28. Layout Example for the DBV Package

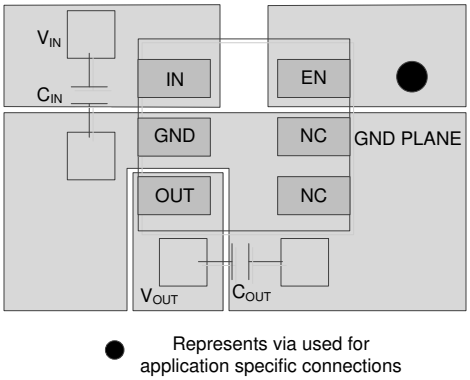

Figure 29. Layout Example for the DSE Package

版权 © 2010–2019, Texas Instruments Incorporated

11 器件和文档支持

11.1 器件支持

11.1.1 开发支持

11.1.1.1 Spice 模型

分析模拟电路和系统的性能时，使用 SPICE 模型对电路性能进行计算机仿真非常有用。您可以从产品文件夹中的*工具和软件* 下获取 TLV702 的 SPICE 模型。

11.1.2 器件命名规则

表 **3.** 订购信息 (1)

产品	V_{OUT} (2)
TLV702**xx** ***yyyz***	**XX** 为标称输出电压（例如 28 = 2.8V）。 **YYY** 为封装符号。 **Z** 为卷带数量（R = 3000，T = 250）。

(1) 要获得最新的封装和订货信息，请参阅本文档末尾的封装选项附录，或者访问器件产品文件夹，此文件夹位于www.ti.com.cn内。
(2) 可提供 1.2V 至 4.8V 范围内的输出电压（以 50mV 为单位增加）。更多详细信息及可用性，请联系制造商。

11.2 文档支持

11.2.1 相关文档

请参阅如下相关文档：

德州仪器 (TI)，*《使用 TLV700xxEVM-503》* 用户指南

11.3 接收文档更新通知

要接收文档更新通知，请导航至 TI.com.cn 上的器件产品文件夹。单击右上角的*通知我* 进行注册，即可每周接收产品信息更改摘要。有关更改的详细信息，请查看任何已修订文档中包含的修订历史记录。

11.4 社区资源

The following links connect to TI community resources. Linked contents are provided "AS IS" by the respective contributors. They do not constitute TI specifications and do not necessarily reflect TI's views; see TI's Terms of Use.

TI E2E™ Online Community ***TI's Engineer-to-Engineer (E2E) Community.*** Created to foster collaboration among engineers. At e2e.ti.com, you can ask questions, share knowledge, explore ideas and help solve problems with fellow engineers.

Design Support ***TI's Design Support*** Quickly find helpful E2E forums along with design support tools and contact information for technical support.

11.5 商标

E2E is a trademark of Texas Instruments.
Bluetooth is a registered trademark of Bluetooth SIG.
ZigBee is a registered trademark of the ZigBee Alliance.
All other trademarks are the property of their respective owners.

11.6 静电放电警告

ESD 可能会损坏该集成电路。德州仪器 (TI) 建议通过适当的预防措施处理所有集成电路。如果不遵守正确的处理措施和安装程序，可能会损坏集成电路。

ESD 的损坏小至导致微小的性能降级，大至整个器件故障。 精密的集成电路可能更容易受到损坏，这是因为非常细微的参数更改都可能会导致器件与其发布的规格不相符。

11.7 Glossary

SLYZ022 — *TI Glossary*.

This glossary lists and explains terms, acronyms, and definitions.

12 机械、封装和可订购信息

以下页面包含机械、封装和可订购信息。这些信息是指定器件的最新可用数据。数据如有变更，恕不另行通知，且不会对此文档进行修订。如需获取此数据表的浏览器版本，请查阅左侧的导航栏。

版权 © 2010–2019, Texas Instruments Incorporated

PACKAGING INFORMATION

Orderable part number	Status (1)	Material type (2)	Package | Pins	Package qty | Carrier	RoHS (3)	Lead finish/ Ball material (4)	MSL rating/ Peak reflow (5)	Op temp (°C)	Part marking (6)
TLV70212DBVR	Active	Production	SOT-23 (DBV) | 5	3000 | LARGE T&R	Yes	NIPDAU | SN	Level-1-260C-UNLIM	-40 to 125	QVN
TLV70212DBVR.A	Active	Production	SOT-23 (DBV) | 5	3000 | LARGE T&R	Yes	NIPDAU	Level-1-260C-UNLIM	-40 to 125	QVN
TLV70212DBVR.B	Active	Production	SOT-23 (DBV) | 5	3000 | LARGE T&R	Yes	NIPDAU	Level-1-260C-UNLIM	-40 to 125	QVN
TLV70212DBVRG4	Active	Production	SOT-23 (DBV) | 5	3000 | LARGE T&R	Yes	NIPDAU	Level-1-260C-UNLIM	-40 to 125	QVN
TLV70212DBVRG4.A	Active	Production	SOT-23 (DBV) | 5	3000 | LARGE T&R	Yes	NIPDAU	Level-1-260C-UNLIM	-40 to 125	QVN
TLV70212DBVRG4.B	Active	Production	SOT-23 (DBV) | 5	3000 | LARGE T&R	Yes	NIPDAU	Level-1-260C-UNLIM	-40 to 125	QVN
TLV70212DBVT	Active	Production	SOT-23 (DBV) | 5	250 | SMALL T&R	Yes	NIPDAU | SN	Level-1-260C-UNLIM	-40 to 125	QVN
TLV70212DBVT.A	Active	Production	SOT-23 (DBV) | 5	250 | SMALL T&R	Yes	NIPDAU	Level-1-260C-UNLIM	-40 to 125	QVN
TLV70212DBVT.B	Active	Production	SOT-23 (DBV) | 5	250 | SMALL T&R	Yes	NIPDAU	Level-1-260C-UNLIM	-40 to 125	QVN
TLV70213DBVR	Active	Production	SOT-23 (DBV) | 5	3000 | LARGE T&R	Yes	NIPDAU | SN	Level-1-260C-UNLIM	-40 to 125	12UW
TLV70213DBVR.A	Active	Production	SOT-23 (DBV) | 5	3000 | LARGE T&R	Yes	SN	Level-1-260C-UNLIM	-40 to 125	12UW
TLV70213DBVR.B	Active	Production	SOT-23 (DBV) | 5	3000 | LARGE T&R	Yes	SN	Level-1-260C-UNLIM	-40 to 125	12UW
TLV70213DBVT	Active	Production	SOT-23 (DBV) | 5	250 | SMALL T&R	Yes	NIPDAU | SN	Level-1-260C-UNLIM	-40 to 125	12UW
TLV70213DBVT.A	Active	Production	SOT-23 (DBV) | 5	250 | SMALL T&R	Yes	NIPDAU	Level-1-260C-UNLIM	-40 to 125	12UW
TLV70213DBVT.B	Active	Production	SOT-23 (DBV) | 5	250 | SMALL T&R	Yes	NIPDAU	Level-1-260C-UNLIM	-40 to 125	12UW
TLV70215DBVR	Active	Production	SOT-23 (DBV) | 5	3000 | LARGE T&R	Yes	NIPDAU | SN	Level-1-260C-UNLIM	-40 to 125	SIR
TLV70215DBVR.A	Active	Production	SOT-23 (DBV) | 5	3000 | LARGE T&R	Yes	NIPDAU	Level-1-260C-UNLIM	-40 to 125	SIR
TLV70215DBVR.B	Active	Production	SOT-23 (DBV) | 5	3000 | LARGE T&R	Yes	NIPDAU	Level-1-260C-UNLIM	-40 to 125	SIR
TLV70215DBVT	Active	Production	SOT-23 (DBV) | 5	250 | SMALL T&R	Yes	NIPDAU | SN	Level-1-260C-UNLIM	-40 to 125	SIR
TLV70215DBVT.A	Active	Production	SOT-23 (DBV) | 5	250 | SMALL T&R	Yes	NIPDAU	Level-1-260C-UNLIM	-40 to 125	SIR
TLV70215DBVT.B	Active	Production	SOT-23 (DBV) | 5	250 | SMALL T&R	Yes	NIPDAU	Level-1-260C-UNLIM	-40 to 125	SIR
TLV70215PDBVR	Active	Production	SOT-23 (DBV) | 5	3000 | LARGE T&R	Yes	NIPDAU | SN	Level-1-260C-UNLIM	-40 to 125	SLG
TLV70215PDBVR.B	Active	Production	SOT-23 (DBV) | 5	3000 | LARGE T&R	Yes	SN	Level-1-260C-UNLIM	-40 to 125	SLG
TLV70215PDBVT	Active	Production	SOT-23 (DBV) | 5	250 | SMALL T&R	Yes	NIPDAU | SN	Level-1-260C-UNLIM	-40 to 125	SLG
TLV70215PDBVT.B	Active	Production	SOT-23 (DBV) | 5	250 | SMALL T&R	Yes	SN	Level-1-260C-UNLIM	-40 to 125	SLG
TLV70218DBVR	Active	Production	SOT-23 (DBV) | 5	3000 | LARGE T&R	Yes	NIPDAU	Level-1-260C-UNLIM	-40 to 125	QUW
TLV70218DBVR.A	Active	Production	SOT-23 (DBV) | 5	3000 | LARGE T&R	Yes	NIPDAU	Level-1-260C-UNLIM	-40 to 125	QUW
TLV70218DBVR.B	Active	Production	SOT-23 (DBV) | 5	3000 | LARGE T&R	Yes	NIPDAU	Level-1-260C-UNLIM	-40 to 125	QUW
TLV70218DBVRG4	Active	Production	SOT-23 (DBV) | 5	3000 | LARGE T&R	Yes	NIPDAU	Level-1-260C-UNLIM	-40 to 125	QUW

Orderable part number	Status (1)	Material type (2)	Package | Pins	Package qty | Carrier	RoHS (3)	Lead finish/ Ball material (4)	MSL rating/ Peak reflow (5)	Op temp (°C)	Part marking (6)
TLV70218DBVRG4.A	Active	Production	SOT-23 (DBV) | 5	3000 | LARGE T&R	Yes	NIPDAU	Level-1-260C-UNLIM	-40 to 125	QUW
TLV70218DBVRG4.B	Active	Production	SOT-23 (DBV) | 5	3000 | LARGE T&R	Yes	NIPDAU	Level-1-260C-UNLIM	-40 to 125	QUW
TLV70218DBVT	Active	Production	SOT-23 (DBV) | 5	250 | SMALL T&R	Yes	NIPDAU | SN	Level-1-260C-UNLIM	-40 to 125	QUW
TLV70218DBVT.A	Active	Production	SOT-23 (DBV) | 5	250 | SMALL T&R	Yes	NIPDAU	Level-1-260C-UNLIM	-40 to 125	QUW
TLV70218DBVT.B	Active	Production	SOT-23 (DBV) | 5	250 | SMALL T&R	Yes	NIPDAU	Level-1-260C-UNLIM	-40 to 125	QUW
TLV70220PDBVR	Active	Production	SOT-23 (DBV) | 5	3000 | LARGE T&R	Yes	NIPDAU	Level-1-260C-UNLIM	-40 to 125	QXL
TLV70220PDBVR.B	Active	Production	SOT-23 (DBV) | 5	3000 | LARGE T&R	Yes	NIPDAU	Level-1-260C-UNLIM	-40 to 125	QXL
TLV70220PDBVRG4	Active	Production	SOT-23 (DBV) | 5	3000 | LARGE T&R	Yes	NIPDAU	Level-1-260C-UNLIM	-40 to 125	QXL
TLV70220PDBVRG4.B	Active	Production	SOT-23 (DBV) | 5	3000 | LARGE T&R	Yes	NIPDAU	Level-1-260C-UNLIM	-40 to 125	QXL
TLV70220PDBVT	Active	Production	SOT-23 (DBV) | 5	250 | SMALL T&R	Yes	NIPDAU	Level-1-260C-UNLIM	-40 to 125	QXL
TLV70220PDBVT.B	Active	Production	SOT-23 (DBV) | 5	250 | SMALL T&R	Yes	NIPDAU	Level-1-260C-UNLIM	-40 to 125	QXL
TLV70225DBVR	Active	Production	SOT-23 (DBV) | 5	3000 | LARGE T&R	Yes	NIPDAU | SN	Level-1-260C-UNLIM	-40 to 125	QVF
TLV70225DBVR.A	Active	Production	SOT-23 (DBV) | 5	3000 | LARGE T&R	Yes	SN	Level-1-260C-UNLIM	-40 to 125	QVF
TLV70225DBVR.B	Active	Production	SOT-23 (DBV) | 5	3000 | LARGE T&R	Yes	SN	Level-1-260C-UNLIM	-40 to 125	QVF
TLV70225DBVRG4	Active	Production	SOT-23 (DBV) | 5	3000 | LARGE T&R	Yes	NIPDAU	Level-1-260C-UNLIM	-40 to 125	QVF
TLV70225DBVRG4.A	Active	Production	SOT-23 (DBV) | 5	3000 | LARGE T&R	Yes	NIPDAU	Level-1-260C-UNLIM	-40 to 125	QVF
TLV70225DBVRG4.B	Active	Production	SOT-23 (DBV) | 5	3000 | LARGE T&R	Yes	NIPDAU	Level-1-260C-UNLIM	-40 to 125	QVF
TLV70225DBVT	Active	Production	SOT-23 (DBV) | 5	250 | SMALL T&R	Yes	NIPDAU | SN	Level-1-260C-UNLIM	-40 to 125	QVF
TLV70225DBVT.B	Active	Production	SOT-23 (DBV) | 5	250 | SMALL T&R	Yes	NIPDAU	Level-1-260C-UNLIM	-40 to 125	QVF
TLV70225DSER	Active	Production	WSON (DSE) | 6	3000 | LARGE T&R	Yes	NIPDAUAG	Level-1-260C-UNLIM	-40 to 125	SY
TLV70225DSER.A	Active	Production	WSON (DSE) | 6	3000 | LARGE T&R	Yes	NIPDAUAG	Level-1-260C-UNLIM	-40 to 125	SY
TLV70225DSER.B	Active	Production	WSON (DSE) | 6	3000 | LARGE T&R	Yes	NIPDAUAG	Level-1-260C-UNLIM	-40 to 125	SY
TLV70225DSET	Active	Production	WSON (DSE) | 6	250 | SMALL T&R	Yes	NIPDAUAG	Level-1-260C-UNLIM	-40 to 125	SY
TLV70225DSET.A	Active	Production	WSON (DSE) | 6	250 | SMALL T&R	Yes	NIPDAUAG	Level-1-260C-UNLIM	-40 to 125	SY
TLV70225DSET.B	Active	Production	WSON (DSE) | 6	250 | SMALL T&R	Yes	NIPDAUAG	Level-1-260C-UNLIM	-40 to 125	SY
TLV70228DBVR	Active	Production	SOT-23 (DBV) | 5	3000 | LARGE T&R	Yes	NIPDAU	Level-1-260C-UNLIM	-40 to 125	QUX
TLV70228DBVR.B	Active	Production	SOT-23 (DBV) | 5	3000 | LARGE T&R	Yes	NIPDAU	Level-1-260C-UNLIM	-40 to 125	QUX
TLV70228DBVRG4	Active	Production	SOT-23 (DBV) | 5	3000 | LARGE T&R	Yes	NIPDAU	Level-1-260C-UNLIM	-40 to 125	QUX
TLV70228DBVRG4.B	Active	Production	SOT-23 (DBV) | 5	3000 | LARGE T&R	Yes	NIPDAU	Level-1-260C-UNLIM	-40 to 125	QUX
TLV70228DBVT	Active	Production	SOT-23 (DBV) | 5	250 | SMALL T&R	Yes	NIPDAU | SN	Level-1-260C-UNLIM	-40 to 125	QUX
TLV70228DBVT.B	Active	Production	SOT-23 (DBV) | 5	250 | SMALL T&R	Yes	SN	Level-1-260C-UNLIM	-40 to 125	QUX

Orderable part number	Status (1)	Material type (2)	Package | Pins	Package qty | Carrier	RoHS (3)	Lead finish/ Ball material (4)	MSL rating/ Peak reflow (5)	Op temp (°C)	Part marking (6)
TLV70228DSER	Active	Production	WSON (DSE) | 6	3000 | LARGE T&R	Yes	NIPDAUAG	Level-1-260C-UNLIM	-40 to 125	VY
TLV70228DSER.B	Active	Production	WSON (DSE) | 6	3000 | LARGE T&R	Yes	NIPDAUAG	Level-1-260C-UNLIM	-40 to 125	VY
TLV70228DSET	Active	Production	WSON (DSE) | 6	250 | SMALL T&R	Yes	NIPDAUAG	Level-1-260C-UNLIM	-40 to 125	VY
TLV70228DSET.B	Active	Production	WSON (DSE) | 6	250 | SMALL T&R	Yes	NIPDAUAG	Level-1-260C-UNLIM	-40 to 125	VY
TLV70228PDBVR	Active	Production	SOT-23 (DBV) | 5	3000 | LARGE T&R	Yes	NIPDAU	Level-1-260C-UNLIM	-40 to 125	QVA
TLV70228PDBVR.B	Active	Production	SOT-23 (DBV) | 5	3000 | LARGE T&R	Yes	NIPDAU	Level-1-260C-UNLIM	-40 to 125	QVA
TLV70228PDBVRG4	Active	Production	SOT-23 (DBV) | 5	3000 | LARGE T&R	Yes	NIPDAU	Level-1-260C-UNLIM	-40 to 125	QVA
TLV70228PDBVRG4.B	Active	Production	SOT-23 (DBV) | 5	3000 | LARGE T&R	Yes	NIPDAU	Level-1-260C-UNLIM	-40 to 125	QVA
TLV70228PDBVT	Active	Production	SOT-23 (DBV) | 5	250 | SMALL T&R	Yes	NIPDAU | SN	Level-1-260C-UNLIM	-40 to 125	QVA
TLV70228PDBVT.B	Active	Production	SOT-23 (DBV) | 5	250 | SMALL T&R	Yes	SN	Level-1-260C-UNLIM	-40 to 125	QVA
TLV70229DBVR	Active	Production	SOT-23 (DBV) | 5	3000 | LARGE T&R	Yes	NIPDAU	Level-1-260C-UNLIM	-40 to 125	SJW
TLV70229DBVR.B	Active	Production	SOT-23 (DBV) | 5	3000 | LARGE T&R	Yes	NIPDAU	Level-1-260C-UNLIM	-40 to 125	SJW
TLV70229DBVRG4	Active	Production	SOT-23 (DBV) | 5	3000 | LARGE T&R	Yes	NIPDAU	Level-1-260C-UNLIM	-40 to 125	SJW
TLV70229DBVRG4.B	Active	Production	SOT-23 (DBV) | 5	3000 | LARGE T&R	Yes	NIPDAU	Level-1-260C-UNLIM	-40 to 125	SJW
TLV70229DBVT	Active	Production	SOT-23 (DBV) | 5	250 | SMALL T&R	Yes	NIPDAU	Level-1-260C-UNLIM	-40 to 125	SJW
TLV70229DBVT.B	Active	Production	SOT-23 (DBV) | 5	250 | SMALL T&R	Yes	NIPDAU	Level-1-260C-UNLIM	-40 to 125	SJW
TLV70229DSER	Active	Production	WSON (DSE) | 6	3000 | LARGE T&R	Yes	NIPDAUAG	Level-1-260C-UNLIM	-40 to 125	SZ
TLV70229DSER.B	Active	Production	WSON (DSE) | 6	3000 | LARGE T&R	Yes	NIPDAUAG	Level-1-260C-UNLIM	-40 to 125	SZ
TLV70229DSET	Active	Production	WSON (DSE) | 6	250 | SMALL T&R	Yes	NIPDAUAG	Level-1-260C-UNLIM	-40 to 125	SZ
TLV70229DSET.B	Active	Production	WSON (DSE) | 6	250 | SMALL T&R	Yes	NIPDAUAG	Level-1-260C-UNLIM	-40 to 125	SZ
TLV70230DBVR	Active	Production	SOT-23 (DBV) | 5	3000 | LARGE T&R	Yes	NIPDAU | SN	Level-1-260C-UNLIM	-40 to 125	QUY
TLV70230DBVR.A	Active	Production	SOT-23 (DBV) | 5	3000 | LARGE T&R	Yes	NIPDAU	Level-1-260C-UNLIM	-40 to 125	QUY
TLV70230DBVR.B	Active	Production	SOT-23 (DBV) | 5	3000 | LARGE T&R	Yes	NIPDAU	Level-1-260C-UNLIM	-40 to 125	QUY
TLV70230DBVT	Active	Production	SOT-23 (DBV) | 5	250 | SMALL T&R	Yes	NIPDAU | SN	Level-1-260C-UNLIM	-40 to 125	QUY
TLV70230DBVT.A	Active	Production	SOT-23 (DBV) | 5	250 | SMALL T&R	Yes	SN	Level-1-260C-UNLIM	-40 to 125	QUY
TLV70230DBVT.B	Active	Production	SOT-23 (DBV) | 5	250 | SMALL T&R	Yes	SN	Level-1-260C-UNLIM	-40 to 125	QUY
TLV70231DBVR	Active	Production	SOT-23 (DBV) | 5	3000 | LARGE T&R	Yes	NIPDAU	Level-1-260C-UNLIM	-40 to 125	QUZ
TLV70231DBVR.A	Active	Production	SOT-23 (DBV) | 5	3000 | LARGE T&R	Yes	NIPDAU	Level-1-260C-UNLIM	-40 to 125	QUZ
TLV70231DBVR.B	Active	Production	SOT-23 (DBV) | 5	3000 | LARGE T&R	Yes	NIPDAU	Level-1-260C-UNLIM	-40 to 125	QUZ
TLV70231DBVT	Active	Production	SOT-23 (DBV) | 5	250 | SMALL T&R	Yes	NIPDAU	Level-1-260C-UNLIM	-40 to 125	QUZ
TLV70231DBVT.A	Active	Production	SOT-23 (DBV) | 5	250 | SMALL T&R	Yes	NIPDAU	Level-1-260C-UNLIM	-40 to 125	QUZ

Orderable part number	Status (1)	Material type (2)	Package | Pins	Package qty | Carrier	RoHS (3)	Lead finish/ Ball material (4)	MSL rating/ Peak reflow (5)	Op temp (°C)	Part marking (6)
TLV70231DBVT.B	Active	Production	SOT-23 (DBV) | 5	250 | SMALL T&R	Yes	NIPDAU	Level-1-260C-UNLIM	-40 to 125	QUZ
TLV70233DBVR	Active	Production	SOT-23 (DBV) | 5	3000 | LARGE T&R	Yes	NIPDAU | SN	Level-1-260C-UNLIM	-40 to 125	QVD
TLV70233DBVR.A	Active	Production	SOT-23 (DBV) | 5	3000 | LARGE T&R	Yes	NIPDAU	Level-1-260C-UNLIM	-40 to 125	QVD
TLV70233DBVR.B	Active	Production	SOT-23 (DBV) | 5	3000 | LARGE T&R	Yes	NIPDAU	Level-1-260C-UNLIM	-40 to 125	QVD
TLV70233DBVRG4	Active	Production	SOT-23 (DBV) | 5	3000 | LARGE T&R	Yes	NIPDAU	Level-1-260C-UNLIM	-40 to 125	QVD
TLV70233DBVRG4.A	Active	Production	SOT-23 (DBV) | 5	3000 | LARGE T&R	Yes	NIPDAU	Level-1-260C-UNLIM	-40 to 125	QVD
TLV70233DBVRG4.B	Active	Production	SOT-23 (DBV) | 5	3000 | LARGE T&R	Yes	NIPDAU	Level-1-260C-UNLIM	-40 to 125	QVD
TLV70233DBVT	Active	Production	SOT-23 (DBV) | 5	250 | SMALL T&R	Yes	NIPDAU | SN	Level-1-260C-UNLIM	-40 to 125	QVD
TLV70233DBVT.A	Active	Production	SOT-23 (DBV) | 5	250 | SMALL T&R	Yes	NIPDAU	Level-1-260C-UNLIM	-40 to 125	QVD
TLV70233DBVT.B	Active	Production	SOT-23 (DBV) | 5	250 | SMALL T&R	Yes	NIPDAU	Level-1-260C-UNLIM	-40 to 125	QVD
TLV70233DSER	Active	Production	WSON (DSE) | 6	3000 | LARGE T&R	Yes	NIPDAUAG	Level-1-260C-UNLIM	-40 to 125	WK
TLV70233DSER.B	Active	Production	WSON (DSE) | 6	3000 | LARGE T&R	Yes	NIPDAUAG	Level-1-260C-UNLIM	-40 to 125	WK
TLV70233DSET	Active	Production	WSON (DSE) | 6	250 | SMALL T&R	Yes	NIPDAUAG	Level-1-260C-UNLIM	-40 to 125	WK
TLV70233DSET.B	Active	Production	WSON (DSE) | 6	250 | SMALL T&R	Yes	NIPDAUAG	Level-1-260C-UNLIM	-40 to 125	WK
TLV70233PDBVR	Active	Production	SOT-23 (DBV) | 5	3000 | LARGE T&R	Yes	NIPDAU | SN	Level-1-260C-UNLIM	-40 to 125	SLH
TLV70233PDBVR.B	Active	Production	SOT-23 (DBV) | 5	3000 | LARGE T&R	Yes	SN	Level-1-260C-UNLIM	-40 to 125	SLH
TLV70233PDBVRG4	Active	Production	SOT-23 (DBV) | 5	3000 | LARGE T&R	Yes	NIPDAU	Level-1-260C-UNLIM	-40 to 125	SLH
TLV70233PDBVRG4.B	Active	Production	SOT-23 (DBV) | 5	3000 | LARGE T&R	Yes	NIPDAU	Level-1-260C-UNLIM	-40 to 125	SLH
TLV70233PDBVT	Active	Production	SOT-23 (DBV) | 5	250 | SMALL T&R	Yes	NIPDAU | SN	Level-1-260C-UNLIM	-40 to 125	SLH
TLV70233PDBVT.B	Active	Production	SOT-23 (DBV) | 5	250 | SMALL T&R	Yes	SN	Level-1-260C-UNLIM	-40 to 125	SLH
TLV70235DBVR	Active	Production	SOT-23 (DBV) | 5	3000 | LARGE T&R	Yes	NIPDAU | SN	Level-1-260C-UNLIM	-40 to 125	SDT
TLV70235DBVR.A	Active	Production	SOT-23 (DBV) | 5	3000 | LARGE T&R	Yes	SN	Level-1-260C-UNLIM	-40 to 125	SDT
TLV70235DBVR.B	Active	Production	SOT-23 (DBV) | 5	3000 | LARGE T&R	Yes	SN	Level-1-260C-UNLIM	-40 to 125	SDT
TLV70235DBVT	Active	Production	SOT-23 (DBV) | 5	250 | SMALL T&R	Yes	NIPDAU | SN	Level-1-260C-UNLIM	-40 to 125	SDT
TLV70235DBVT.A	Active	Production	SOT-23 (DBV) | 5	250 | SMALL T&R	Yes	SN	Level-1-260C-UNLIM	-40 to 125	SDT
TLV70235DBVT.B	Active	Production	SOT-23 (DBV) | 5	250 | SMALL T&R	Yes	SN	Level-1-260C-UNLIM	-40 to 125	SDT
TLV70236DSER	Active	Production	WSON (DSE) | 6	3000 | LARGE T&R	Yes	NIPDAUAG	Level-1-260C-UNLIM	-40 to 125	VZ
TLV70236DSER.B	Active	Production	WSON (DSE) | 6	3000 | LARGE T&R	Yes	NIPDAUAG	Level-1-260C-UNLIM	-40 to 125	VZ
TLV70236DSET	Active	Production	WSON (DSE) | 6	250 | SMALL T&R	Yes	NIPDAUAG	Level-1-260C-UNLIM	-40 to 125	VZ
TLV70236DSET.B	Active	Production	WSON (DSE) | 6	250 | SMALL T&R	Yes	NIPDAUAG	Level-1-260C-UNLIM	-40 to 125	VZ
TLV70237DBVR	Active	Production	SOT-23 (DBV) | 5	3000 | LARGE T&R	Yes	NIPDAU | SN	Level-1-260C-UNLIM	-40 to 125	QXR

Orderable part number	Status (1)	Material type (2)	Package | Pins	Package qty | Carrier	RoHS (3)	Lead finish/ Ball material (4)	MSL rating/ Peak reflow (5)	Op temp (°C)	Part marking (6)
TLV70237DBVR.A	Active	Production	SOT-23 (DBV) | 5	3000 | LARGE T&R	Yes	SN	Level-1-260C-UNLIM	-40 to 125	QXR
TLV70237DBVR.B	Active	Production	SOT-23 (DBV) | 5	3000 | LARGE T&R	Yes	SN	Level-1-260C-UNLIM	-40 to 125	QXR
TLV70237DBVT	Active	Production	SOT-23 (DBV) | 5	250 | SMALL T&R	Yes	NIPDAU	Level-1-260C-UNLIM	-40 to 125	QXR
TLV70237DBVT.A	Active	Production	SOT-23 (DBV) | 5	250 | SMALL T&R	Yes	NIPDAU	Level-1-260C-UNLIM	-40 to 125	QXR
TLV70237DBVT.B	Active	Production	SOT-23 (DBV) | 5	250 | SMALL T&R	Yes	NIPDAU	Level-1-260C-UNLIM	-40 to 125	QXR
TLV70237DSER	Active	Production	WSON (DSE) | 6	3000 | LARGE T&R	Yes	NIPDAUAG	Level-1-260C-UNLIM	-40 to 125	D8
TLV70237DSER.B	Active	Production	WSON (DSE) | 6	3000 | LARGE T&R	Yes	NIPDAUAG	Level-1-260C-UNLIM	-40 to 125	D8
TLV70237DSET	Active	Production	WSON (DSE) | 6	250 | SMALL T&R	Yes	NIPDAUAG	Level-1-260C-UNLIM	-40 to 125	D8
TLV70237DSET.B	Active	Production	WSON (DSE) | 6	250 | SMALL T&R	Yes	NIPDAUAG	Level-1-260C-UNLIM	-40 to 125	D8
TLV70242PDSER	Active	Production	WSON (DSE) | 6	3000 | LARGE T&R	Yes	NIPDAUAG	Level-1-260C-UNLIM	-40 to 125	B9
TLV70242PDSER.B	Active	Production	WSON (DSE) | 6	3000 | LARGE T&R	Yes	NIPDAUAG	Level-1-260C-UNLIM	-40 to 125	B9
TLV70242PDSET	Active	Production	WSON (DSE) | 6	250 | SMALL T&R	Yes	NIPDAUAG	Level-1-260C-UNLIM	-40 to 125	B9
TLV70242PDSET.B	Active	Production	WSON (DSE) | 6	250 | SMALL T&R	Yes	NIPDAUAG	Level-1-260C-UNLIM	-40 to 125	B9
TLV70243DSER	Active	Production	WSON (DSE) | 6	3000 | LARGE T&R	Yes	NIPDAUAG	Level-1-260C-UNLIM	-40 to 125	5Q
TLV70243DSER.B	Active	Production	WSON (DSE) | 6	3000 | LARGE T&R	Yes	NIPDAUAG	Level-1-260C-UNLIM	-40 to 125	5Q
TLV70243DSET	Active	Production	WSON (DSE) | 6	250 | SMALL T&R	Yes	NIPDAUAG	Level-1-260C-UNLIM	-40 to 125	5Q
TLV70243DSET.B	Active	Production	WSON (DSE) | 6	250 | SMALL T&R	Yes	NIPDAUAG	Level-1-260C-UNLIM	-40 to 125	5Q
TLV70245DBVR	Active	Production	SOT-23 (DBV) | 5	3000 | LARGE T&R	Yes	NIPDAU | SN	Level-1-260C-UNLIM	-40 to 125	SCK
TLV70245DBVR.A	Active	Production	SOT-23 (DBV) | 5	3000 | LARGE T&R	Yes	SN	Level-1-260C-UNLIM	-40 to 125	SCK
TLV70245DBVR.B	Active	Production	SOT-23 (DBV) | 5	3000 | LARGE T&R	Yes	SN	Level-1-260C-UNLIM	-40 to 125	SCK
TLV70245DBVT	Active	Production	SOT-23 (DBV) | 5	250 | SMALL T&R	Yes	NIPDAU | SN	Level-1-260C-UNLIM	-40 to 125	SCK
TLV70245DBVT.A	Active	Production	SOT-23 (DBV) | 5	250 | SMALL T&R	Yes	SN	Level-1-260C-UNLIM	-40 to 125	SCK
TLV70245DBVT.B	Active	Production	SOT-23 (DBV) | 5	250 | SMALL T&R	Yes	SN	Level-1-260C-UNLIM	-40 to 125	SCK
TLV70245DBVTG4	Active	Production	SOT-23 (DBV) | 5	250 | SMALL T&R	Yes	NIPDAU	Level-1-260C-UNLIM	-40 to 125	SCK
TLV70245DBVTG4.A	Active	Production	SOT-23 (DBV) | 5	250 | SMALL T&R	Yes	NIPDAU	Level-1-260C-UNLIM	-40 to 125	SCK
TLV70245DBVTG4.B	Active	Production	SOT-23 (DBV) | 5	250 | SMALL T&R	Yes	NIPDAU	Level-1-260C-UNLIM	-40 to 125	SCK
TLV702475DBVR	Active	Production	SOT-23 (DBV) | 5	3000 | LARGE T&R	Yes	NIPDAU | SN	Level-1-260C-UNLIM	-40 to 125	QWJ
TLV702475DBVR.A	Active	Production	SOT-23 (DBV) | 5	3000 | LARGE T&R	Yes	SN	Level-1-260C-UNLIM	-40 to 125	QWJ
TLV702475DBVR.B	Active	Production	SOT-23 (DBV) | 5	3000 | LARGE T&R	Yes	SN	Level-1-260C-UNLIM	-40 to 125	QWJ
TLV702475DBVT	Active	Production	SOT-23 (DBV) | 5	250 | SMALL T&R	Yes	NIPDAU | SN	Level-1-260C-UNLIM	-40 to 125	QWJ
TLV702475DBVT.A	Active	Production	SOT-23 (DBV) | 5	250 | SMALL T&R	Yes	SN	Level-1-260C-UNLIM	-40 to 125	QWJ

Orderable part number	Status (1)	Material type (2)	Package | Pins	Package qty | Carrier	RoHS (3)	Lead finish/ Ball material (4)	MSL rating/ Peak reflow (5)	Op temp (°C)	Part marking (6)
TLV702475DBVT.B	Active	Production	SOT-23 (DBV) | 5	250 | SMALL T&R	Yes	SN	Level-1-260C-UNLIM	-40 to 125	QWJ

(1) **Status:** For more details on status, see our product life cycle.

(2) **Material type:** When designated, preproduction parts are prototypes/experimental devices, and are not yet approved or released for full production. Testing and final process, including without limitation quality assurance, reliability performance testing, and/or process qualification, may not yet be complete, and this item is subject to further changes or possible discontinuation. If available for ordering, purchases will be subject to an additional waiver at checkout, and are intended for early internal evaluation purposes only. These items are sold without warranties of any kind.

(3) **RoHS values:** Yes, No, RoHS Exempt. See the TI RoHS Statement for additional information and value definition.

(4) **Lead finish/Ball material:** Parts may have multiple material finish options. Finish options are separated by a vertical ruled line. Lead finish/Ball material values may wrap to two lines if the finish value exceeds the maximum column width.

(5) **MSL rating/Peak reflow:** The moisture sensitivity level ratings and peak solder (reflow) temperatures. In the event that a part has multiple moisture sensitivity ratings, only the lowest level per JEDEC standards is shown. Refer to the shipping label for the actual reflow temperature that will be used to mount the part to the printed circuit board.

(6) **Part marking:** There may be an additional marking, which relates to the logo, the lot trace code information, or the environmental category of the part.

Multiple part markings will be inside parentheses. Only one part marking contained in parentheses and separated by a "~" will appear on a part. If a line is indented then it is a continuation of the previous line and the two combined represent the entire part marking for that device.

Important Information and Disclaimer: The information provided on this page represents TI's knowledge and belief as of the date that it is provided. TI bases its knowledge and belief on information provided by third parties, and makes no representation or warranty as to the accuracy of such information. Efforts are underway to better integrate information from third parties. TI has taken and continues to take reasonable steps to provide representative and accurate information but may not have conducted destructive testing or chemical analysis on incoming materials and chemicals. TI and TI suppliers consider certain information to be proprietary, and thus CAS numbers and other limited information may not be available for release.

In no event shall TI's liability arising out of such information exceed the total purchase price of the TI part(s) at issue in this document sold by TI to Customer on an annual basis.

OTHER QUALIFIED VERSIONS OF TLV702 :

- Automotive : TLV702-Q1

NOTE: Qualified Version Definitions:

- Automotive - Q100 devices qualified for high-reliability automotive applications targeting zero defects

TAPE AND REEL INFORMATION

REEL DIMENSIONS

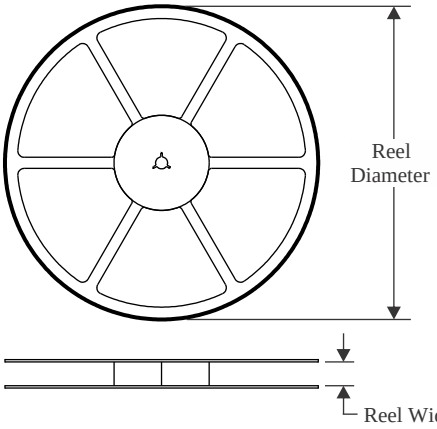

TAPE DIMENSIONS

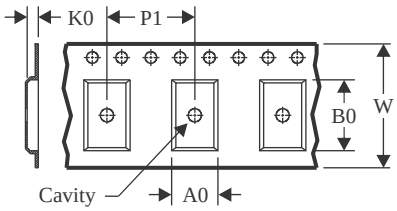

A0	Dimension designed to accommodate the component width
B0	Dimension designed to accommodate the component length
K0	Dimension designed to accommodate the component thickness
W	Overall width of the carrier tape
P1	Pitch between successive cavity centers

QUADRANT ASSIGNMENTS FOR PIN 1 ORIENTATION IN TAPE

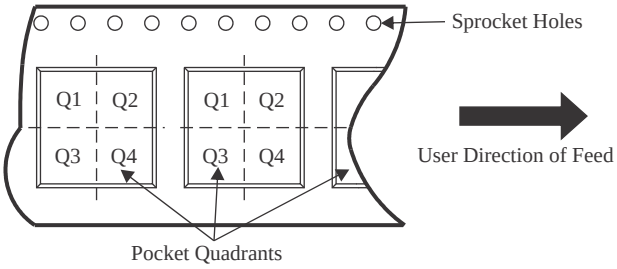

*All dimensions are nominal

Device	Package Type	Package Drawing	Pins	SPQ	Reel Diameter (mm)	Reel Width W1 (mm)	A0 (mm)	B0 (mm)	K0 (mm)	P1 (mm)	W (mm)	Pin1 Quadrant
TLV70212DBVR	SOT-23	DBV	5	3000	180.0	8.4	3.2	3.2	1.4	4.0	8.0	Q3
TLV70212DBVRG4	SOT-23	DBV	5	3000	180.0	8.4	3.2	3.2	1.4	4.0	8.0	Q3
TLV70212DBVT	SOT-23	DBV	5	250	180.0	8.4	3.2	3.2	1.4	4.0	8.0	Q3
TLV70213DBVR	SOT-23	DBV	5	3000	180.0	8.4	3.2	3.2	1.4	4.0	8.0	Q3
TLV70213DBVT	SOT-23	DBV	5	250	180.0	8.4	3.2	3.2	1.4	4.0	8.0	Q3
TLV70215DBVR	SOT-23	DBV	5	3000	180.0	8.4	3.2	3.2	1.4	4.0	8.0	Q3
TLV70215DBVT	SOT-23	DBV	5	250	180.0	8.4	3.2	3.2	1.4	4.0	8.0	Q3
TLV70215DBVT	SOT-23	DBV	5	250	178.0	8.4	3.23	3.17	1.37	4.0	8.0	Q3
TLV70215PDBVR	SOT-23	DBV	5	3000	178.0	8.4	3.2	3.2	1.4	4.0	8.0	Q3
TLV70215PDBVT	SOT-23	DBV	5	250	178.0	8.4	3.23	3.17	1.37	4.0	8.0	Q3
TLV70215PDBVT	SOT-23	DBV	5	250	180.0	8.4	3.2	3.2	1.4	4.0	8.0	Q3
TLV70218DBVR	SOT-23	DBV	5	3000	180.0	8.4	3.2	3.2	1.4	4.0	8.0	Q3
TLV70218DBVR	SOT-23	DBV	5	3000	180.0	8.4	3.2	3.2	1.4	4.0	8.0	Q3
TLV70218DBVRG4	SOT-23	DBV	5	3000	180.0	8.4	3.2	3.2	1.4	4.0	8.0	Q3
TLV70218DBVRG4	SOT-23	DBV	5	3000	180.0	8.4	3.2	3.2	1.4	4.0	8.0	Q3
TLV70218DBVT	SOT-23	DBV	5	250	180.0	8.4	3.23	3.17	1.37	4.0	8.0	Q3

Device	Package Type	Package Drawing	Pins	SPQ	Reel Diameter (mm)	Reel Width W1 (mm)	A0 (mm)	B0 (mm)	K0 (mm)	P1 (mm)	W (mm)	Pin1 Quadrant
TLV70218DBVT	SOT-23	DBV	5	250	180.0	8.4	3.2	3.2	1.4	4.0	8.0	Q3
TLV70220PDBVR	SOT-23	DBV	5	3000	178.0	9.0	3.23	3.17	1.37	4.0	8.0	Q3
TLV70220PDBVRG4	SOT-23	DBV	5	3000	178.0	9.0	3.23	3.17	1.37	4.0	8.0	Q3
TLV70220PDBVT	SOT-23	DBV	5	250	178.0	8.4	3.23	3.17	1.37	4.0	8.0	Q3
TLV70225DBVR	SOT-23	DBV	5	3000	178.0	8.4	3.2	3.2	1.4	4.0	8.0	Q3
TLV70225DBVRG4	SOT-23	DBV	5	3000	180.0	8.4	3.2	3.2	1.4	4.0	8.0	Q3
TLV70225DBVT	SOT-23	DBV	5	250	180.0	8.4	3.2	3.2	1.4	4.0	8.0	Q3
TLV70225DSER	WSON	DSE	6	3000	179.0	8.4	1.8	1.8	1.0	4.0	8.0	Q2
TLV70225DSET	WSON	DSE	6	250	179.0	8.4	1.8	1.8	1.0	4.0	8.0	Q2
TLV70228DBVR	SOT-23	DBV	5	3000	180.0	8.4	3.2	3.2	1.4	4.0	8.0	Q3
TLV70228DBVRG4	SOT-23	DBV	5	3000	180.0	8.4	3.2	3.2	1.4	4.0	8.0	Q3
TLV70228DBVT	SOT-23	DBV	5	250	180.0	8.4	3.2	3.2	1.4	4.0	8.0	Q3
TLV70228DSER	WSON	DSE	6	3000	179.0	8.4	1.8	1.8	1.0	4.0	8.0	Q2
TLV70228DSET	WSON	DSE	6	250	179.0	8.4	1.8	1.8	1.0	4.0	8.0	Q2
TLV70228PDBVR	SOT-23	DBV	5	3000	180.0	8.4	3.23	3.17	1.37	4.0	8.0	Q3
TLV70228PDBVRG4	SOT-23	DBV	5	3000	180.0	8.4	3.23	3.17	1.37	4.0	8.0	Q3
TLV70228PDBVT	SOT-23	DBV	5	250	180.0	8.4	3.23	3.17	1.37	4.0	8.0	Q3
TLV70228PDBVT	SOT-23	DBV	5	250	180.0	8.4	3.2	3.2	1.4	4.0	8.0	Q3
TLV70229DBVR	SOT-23	DBV	5	3000	180.0	8.4	3.2	3.2	1.4	4.0	8.0	Q3
TLV70229DBVRG4	SOT-23	DBV	5	3000	180.0	8.4	3.2	3.2	1.4	4.0	8.0	Q3
TLV70229DBVT	SOT-23	DBV	5	250	180.0	8.4	3.2	3.2	1.4	4.0	8.0	Q3
TLV70229DSER	WSON	DSE	6	3000	180.0	8.4	1.83	1.83	0.89	4.0	8.0	Q2
TLV70229DSET	WSON	DSE	6	250	180.0	8.4	1.83	1.83	0.89	4.0	8.0	Q2
TLV70230DBVR	SOT-23	DBV	5	3000	178.0	8.4	3.2	3.2	1.4	4.0	8.0	Q3
TLV70230DBVT	SOT-23	DBV	5	250	180.0	8.4	3.2	3.2	1.4	4.0	8.0	Q3
TLV70231DBVR	SOT-23	DBV	5	3000	180.0	8.4	3.2	3.2	1.4	4.0	8.0	Q3
TLV70231DBVT	SOT-23	DBV	5	250	180.0	8.4	3.2	3.2	1.4	4.0	8.0	Q3
TLV70233DBVR	SOT-23	DBV	5	3000	178.0	8.4	3.2	3.2	1.4	4.0	8.0	Q3
TLV70233DBVRG4	SOT-23	DBV	5	3000	180.0	8.4	3.2	3.2	1.4	4.0	8.0	Q3
TLV70233DBVRG4	SOT-23	DBV	5	3000	180.0	8.4	3.2	3.2	1.4	4.0	8.0	Q3
TLV70233DBVT	SOT-23	DBV	5	250	180.0	8.4	3.2	3.2	1.4	4.0	8.0	Q3
TLV70233DSER	WSON	DSE	6	3000	179.0	8.4	1.8	1.8	1.0	4.0	8.0	Q2
TLV70233DSET	WSON	DSE	6	250	179.0	8.4	1.8	1.8	1.0	4.0	8.0	Q2
TLV70233PDBVR	SOT-23	DBV	5	3000	178.0	8.4	3.2	3.2	1.4	4.0	8.0	Q3
TLV70233PDBVRG4	SOT-23	DBV	5	3000	178.0	9.0	3.23	3.17	1.37	4.0	8.0	Q3
TLV70233PDBVT	SOT-23	DBV	5	250	178.0	8.4	3.23	3.17	1.37	4.0	8.0	Q3
TLV70233PDBVT	SOT-23	DBV	5	250	180.0	8.4	3.2	3.2	1.4	4.0	8.0	Q3
TLV70235DBVR	SOT-23	DBV	5	3000	178.0	8.4	3.2	3.2	1.4	4.0	8.0	Q3
TLV70235DBVT	SOT-23	DBV	5	250	180.0	8.4	3.2	3.2	1.4	4.0	8.0	Q3
TLV70236DSER	WSON	DSE	6	3000	179.0	8.4	1.8	1.8	1.0	4.0	8.0	Q2
TLV70236DSET	WSON	DSE	6	250	179.0	8.4	1.8	1.8	1.0	4.0	8.0	Q2

Device	Package Type	Package Drawing	Pins	SPQ	Reel Diameter (mm)	Reel Width W1 (mm)	A0 (mm)	B0 (mm)	K0 (mm)	P1 (mm)	W (mm)	Pin1 Quadrant
TLV70237DBVR	SOT-23	DBV	5	3000	180.0	8.4	3.2	3.2	1.4	4.0	8.0	Q3
TLV70237DBVT	SOT-23	DBV	5	250	180.0	8.4	3.2	3.2	1.4	4.0	8.0	Q3
TLV70237DSER	WSON	DSE	6	3000	180.0	8.4	1.83	1.83	0.89	4.0	8.0	Q2
TLV70237DSET	WSON	DSE	6	250	180.0	8.4	1.83	1.83	0.89	4.0	8.0	Q2
TLV70242PDSER	WSON	DSE	6	3000	180.0	8.4	1.83	1.83	0.89	4.0	8.0	Q2
TLV70242PDSET	WSON	DSE	6	250	180.0	8.4	1.83	1.83	0.89	4.0	8.0	Q2
TLV70243DSER	WSON	DSE	6	3000	180.0	8.4	1.83	1.83	0.89	4.0	8.0	Q2
TLV70243DSET	WSON	DSE	6	250	180.0	8.4	1.83	1.83	0.89	4.0	8.0	Q2
TLV70245DBVR	SOT-23	DBV	5	3000	178.0	8.4	3.2	3.2	1.4	4.0	8.0	Q3
TLV70245DBVT	SOT-23	DBV	5	250	178.0	8.4	3.3	3.2	1.4	4.0	8.0	Q3
TLV70245DBVT	SOT-23	DBV	5	250	180.0	8.4	3.2	3.2	1.4	4.0	8.0	Q3
TLV70245DBVT	SOT-23	DBV	5	250	180.0	8.4	3.23	3.17	1.37	4.0	8.0	Q3
TLV70245DBVTG4	SOT-23	DBV	5	250	178.0	8.4	3.3	3.2	1.4	4.0	8.0	Q3
TLV702475DBVR	SOT-23	DBV	5	3000	178.0	8.4	3.2	3.2	1.4	4.0	8.0	Q3
TLV702475DBVT	SOT-23	DBV	5	250	178.0	8.4	3.23	3.17	1.37	4.0	8.0	Q3
TLV702475DBVT	SOT-23	DBV	5	250	180.0	8.4	3.23	3.17	1.37	4.0	8.0	Q3
TLV702475DBVT	SOT-23	DBV	5	250	180.0	8.4	3.2	3.2	1.4	4.0	8.0	Q3

TAPE AND REEL BOX DIMENSIONS

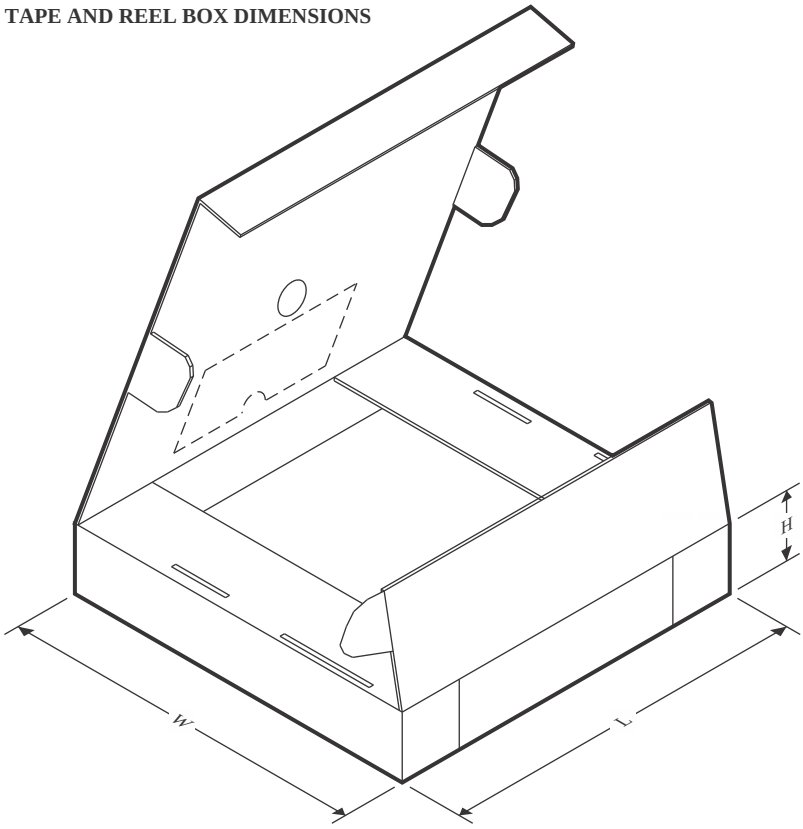

*All dimensions are nominal

Device	Package Type	Package Drawing	Pins	SPQ	Length (mm)	Width (mm)	Height (mm)
TLV70212DBVR	SOT-23	DBV	5	3000	210.0	185.0	35.0
TLV70212DBVRG4	SOT-23	DBV	5	3000	210.0	185.0	35.0
TLV70212DBVT	SOT-23	DBV	5	250	210.0	185.0	35.0
TLV70213DBVR	SOT-23	DBV	5	3000	210.0	185.0	35.0
TLV70213DBVT	SOT-23	DBV	5	250	210.0	185.0	35.0
TLV70215DBVR	SOT-23	DBV	5	3000	210.0	185.0	35.0
TLV70215DBVT	SOT-23	DBV	5	250	210.0	185.0	35.0
TLV70215DBVT	SOT-23	DBV	5	250	180.0	180.0	18.0
TLV70215PDBVR	SOT-23	DBV	5	3000	208.0	191.0	35.0
TLV70215PDBVT	SOT-23	DBV	5	250	180.0	180.0	18.0
TLV70215PDBVT	SOT-23	DBV	5	250	210.0	185.0	35.0
TLV70218DBVR	SOT-23	DBV	5	3000	210.0	185.0	35.0
TLV70218DBVR	SOT-23	DBV	5	3000	210.0	185.0	35.0
TLV70218DBVRG4	SOT-23	DBV	5	3000	210.0	185.0	35.0
TLV70218DBVRG4	SOT-23	DBV	5	3000	210.0	185.0	35.0
TLV70218DBVT	SOT-23	DBV	5	250	183.0	183.0	20.0
TLV70218DBVT	SOT-23	DBV	5	250	210.0	185.0	35.0
TLV70220PDBVR	SOT-23	DBV	5	3000	180.0	180.0	18.0

Device	Package Type	Package Drawing	Pins	SPQ	Length (mm)	Width (mm)	Height (mm)
TLV70220PDBVRG4	SOT-23	DBV	5	3000	180.0	180.0	18.0
TLV70220PDBVT	SOT-23	DBV	5	250	180.0	180.0	18.0
TLV70225DBVR	SOT-23	DBV	5	3000	208.0	191.0	35.0
TLV70225DBVRG4	SOT-23	DBV	5	3000	210.0	185.0	35.0
TLV70225DBVT	SOT-23	DBV	5	250	210.0	185.0	35.0
TLV70225DSER	WSON	DSE	6	3000	200.0	183.0	25.0
TLV70225DSET	WSON	DSE	6	250	200.0	183.0	25.0
TLV70228DBVR	SOT-23	DBV	5	3000	210.0	185.0	35.0
TLV70228DBVRG4	SOT-23	DBV	5	3000	210.0	185.0	35.0
TLV70228DBVT	SOT-23	DBV	5	250	210.0	185.0	35.0
TLV70228DSER	WSON	DSE	6	3000	200.0	183.0	25.0
TLV70228DSET	WSON	DSE	6	250	200.0	183.0	25.0
TLV70228PDBVR	SOT-23	DBV	5	3000	183.0	183.0	20.0
TLV70228PDBVRG4	SOT-23	DBV	5	3000	183.0	183.0	20.0
TLV70228PDBVT	SOT-23	DBV	5	250	183.0	183.0	20.0
TLV70228PDBVT	SOT-23	DBV	5	250	210.0	185.0	35.0
TLV70229DBVR	SOT-23	DBV	5	3000	210.0	185.0	35.0
TLV70229DBVRG4	SOT-23	DBV	5	3000	210.0	185.0	35.0
TLV70229DBVT	SOT-23	DBV	5	250	210.0	185.0	35.0
TLV70229DSER	WSON	DSE	6	3000	183.0	183.0	20.0
TLV70229DSET	WSON	DSE	6	250	183.0	183.0	20.0
TLV70230DBVR	SOT-23	DBV	5	3000	208.0	191.0	35.0
TLV70230DBVT	SOT-23	DBV	5	250	210.0	185.0	35.0
TLV70231DBVR	SOT-23	DBV	5	3000	210.0	185.0	35.0
TLV70231DBVT	SOT-23	DBV	5	250	210.0	185.0	35.0
TLV70233DBVR	SOT-23	DBV	5	3000	208.0	191.0	35.0
TLV70233DBVRG4	SOT-23	DBV	5	3000	210.0	185.0	35.0
TLV70233DBVRG4	SOT-23	DBV	5	3000	210.0	185.0	35.0
TLV70233DBVT	SOT-23	DBV	5	250	210.0	185.0	35.0
TLV70233DSER	WSON	DSE	6	3000	200.0	183.0	25.0
TLV70233DSET	WSON	DSE	6	250	200.0	183.0	25.0
TLV70233PDBVR	SOT-23	DBV	5	3000	208.0	191.0	35.0
TLV70233PDBVRG4	SOT-23	DBV	5	3000	180.0	180.0	18.0
TLV70233PDBVT	SOT-23	DBV	5	250	180.0	180.0	18.0
TLV70233PDBVT	SOT-23	DBV	5	250	210.0	185.0	35.0
TLV70235DBVR	SOT-23	DBV	5	3000	208.0	191.0	35.0
TLV70235DBVT	SOT-23	DBV	5	250	210.0	185.0	35.0
TLV70236DSER	WSON	DSE	6	3000	200.0	183.0	25.0
TLV70236DSET	WSON	DSE	6	250	203.0	203.0	35.0
TLV70237DBVR	SOT-23	DBV	5	3000	210.0	185.0	35.0
TLV70237DBVT	SOT-23	DBV	5	250	210.0	185.0	35.0
TLV70237DSER	WSON	DSE	6	3000	183.0	183.0	20.0
TLV70237DSET	WSON	DSE	6	250	183.0	183.0	20.0

Device	Package Type	Package Drawing	Pins	SPQ	Length (mm)	Width (mm)	Height (mm)
TLV70242PDSER	WSON	DSE	6	3000	183.0	183.0	20.0
TLV70242PDSET	WSON	DSE	6	250	183.0	183.0	20.0
TLV70243DSER	WSON	DSE	6	3000	183.0	183.0	20.0
TLV70243DSET	WSON	DSE	6	250	183.0	183.0	20.0
TLV70245DBVR	SOT-23	DBV	5	3000	208.0	191.0	35.0
TLV70245DBVT	SOT-23	DBV	5	250	180.0	180.0	18.0
TLV70245DBVT	SOT-23	DBV	5	250	210.0	185.0	35.0
TLV70245DBVT	SOT-23	DBV	5	250	183.0	183.0	20.0
TLV70245DBVTG4	SOT-23	DBV	5	250	180.0	180.0	18.0
TLV702475DBVR	SOT-23	DBV	5	3000	208.0	191.0	35.0
TLV702475DBVT	SOT-23	DBV	5	250	180.0	180.0	18.0
TLV702475DBVT	SOT-23	DBV	5	250	183.0	183.0	20.0
TLV702475DBVT	SOT-23	DBV	5	250	210.0	185.0	35.0

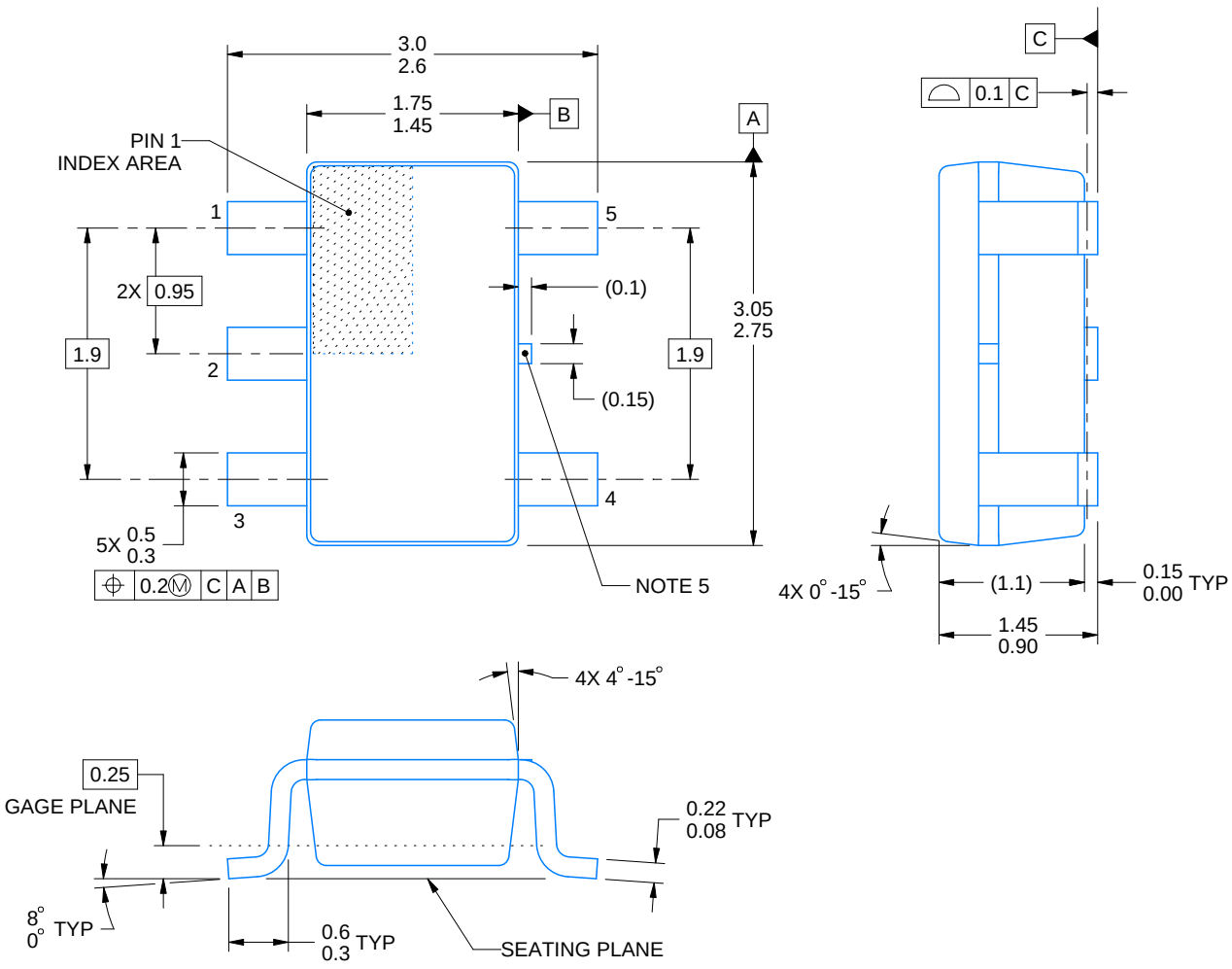

4214839/K 08/2024

NOTES:

1. All linear dimensions are in millimeters. Any dimensions in parenthesis are for reference only. Dimensioning and tolerancing per ASME Y14.5M.
2. This drawing is subject to change without notice.
3. Refernce JEDEC MO-178.
4. Body dimensions do not include mold flash, protrusions, or gate burrs. Mold flash, protrusions, or gate burrs shall not exceed 0.25 mm per side.
5. Support pin may differ or may not be present.

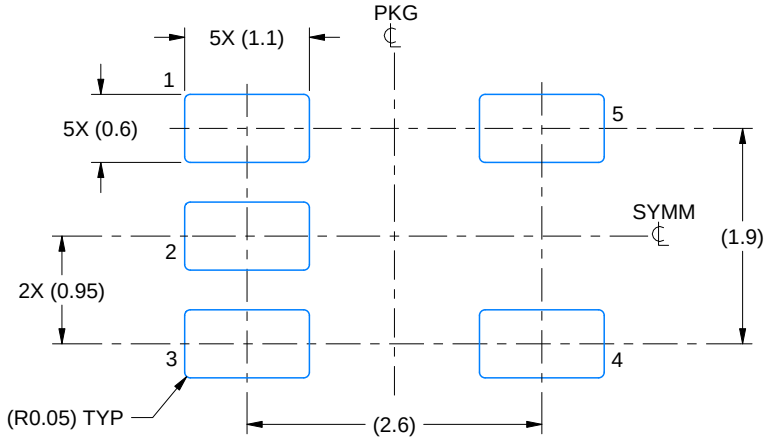

LAND PATTERN EXAMPLE
EXPOSED METAL SHOWN
SCALE:15X

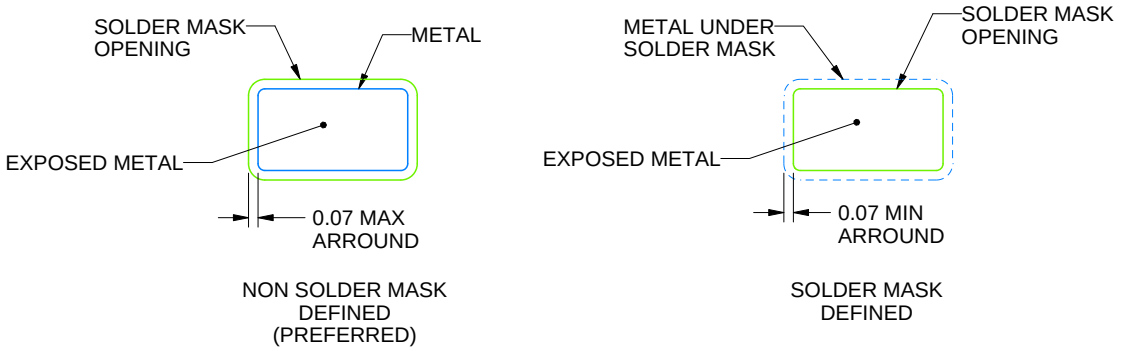

SOLDER MASK DETAILS

4214839/K 08/2024

NOTES: (continued)

6. Publication IPC-7351 may have alternate designs.
7. Solder mask tolerances between and around signal pads can vary based on board fabrication site.

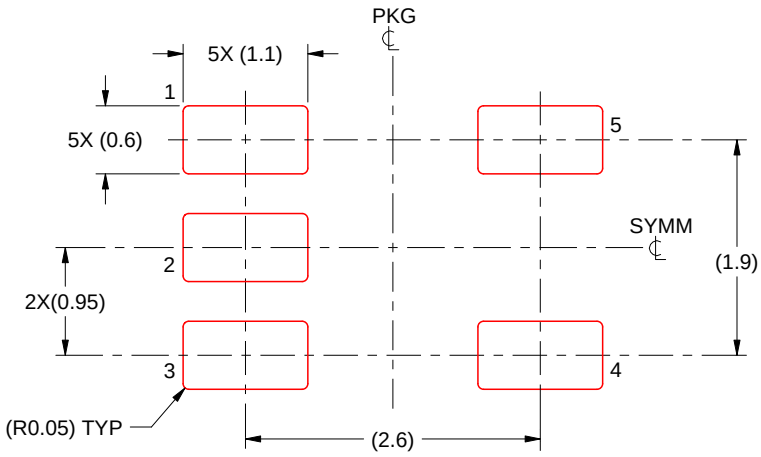

SOLDER PASTE EXAMPLE
BASED ON 0.125 mm THICK STENCIL
SCALE:15X

4214839/K 08/2024

NOTES: (continued)

8. Laser cutting apertures with trapezoidal walls and rounded corners may offer better paste release. IPC-7525 may have alternate design recommendations.
9. Board assembly site may have different recommendations for stencil design.

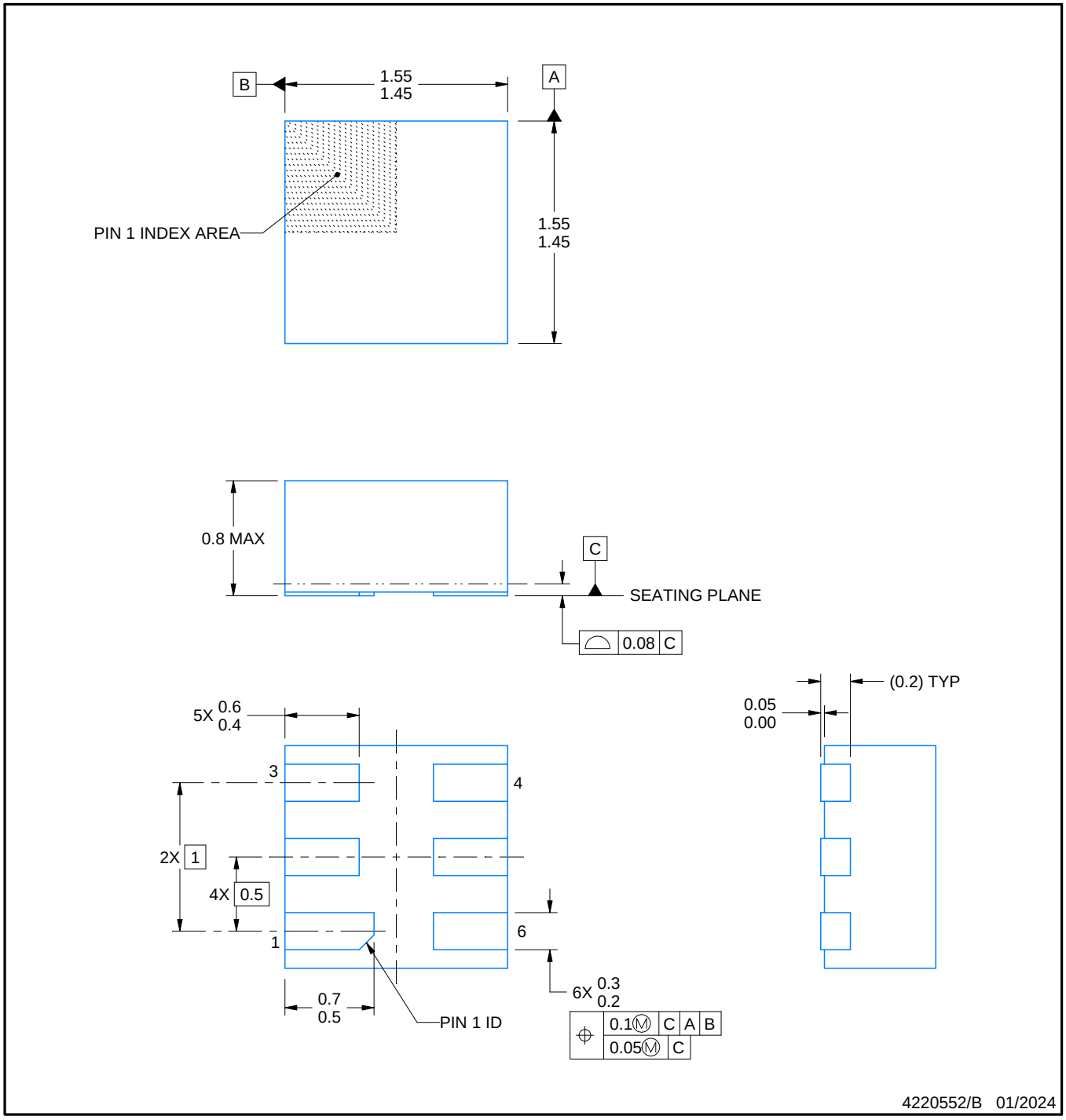

NOTES:

1. All linear dimensions are in millimeters. Any dimensions in parenthesis are for reference only. Dimensioning and tolerancing per ASME Y14.5M.
2. This drawing is subject to change without notice.

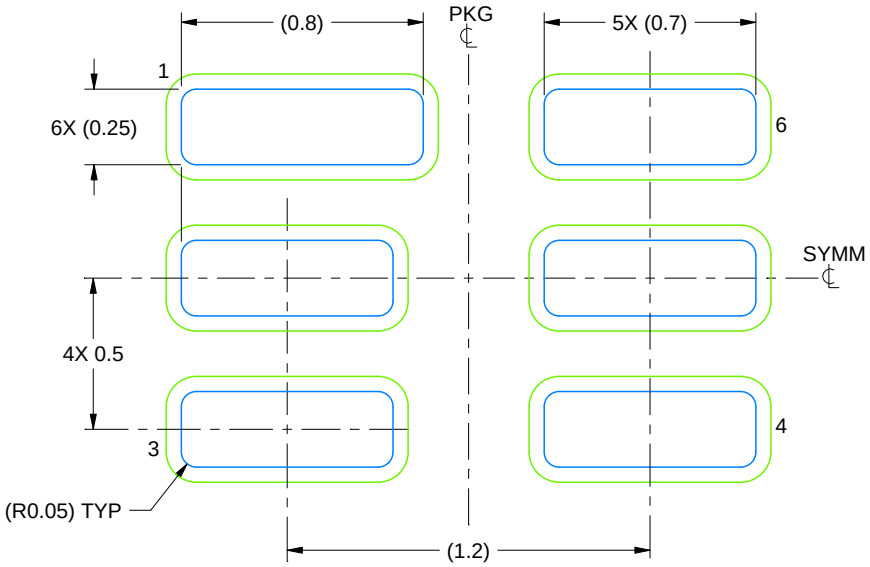

LAND PATTERN EXAMPLE
SCALE:40X

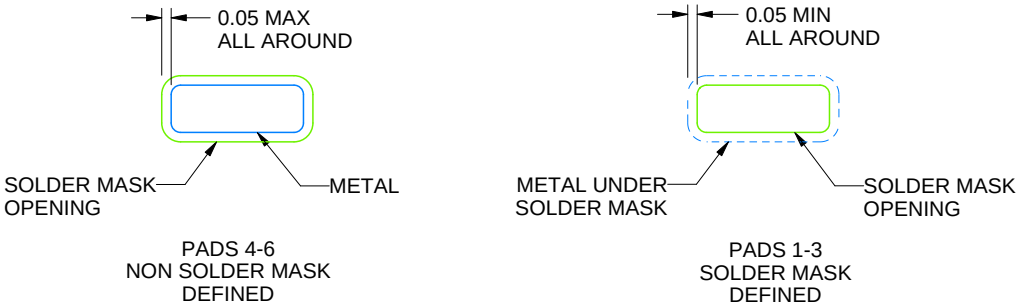

SOLDER MASK DETAILS

4220552/B 01/2024

NOTES: (continued)

3. For more information, see Texas Instruments literature number SLUA271 (www.ti.com/lit/slua271).

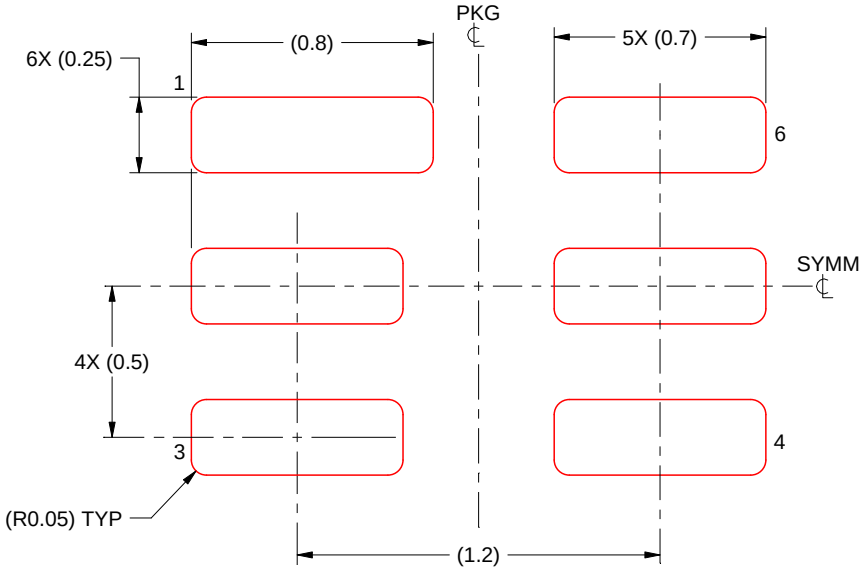

SOLDER PASTE EXAMPLE
BASED ON 0.125 mm THICK STENCIL
SCALE:40X

NOTES: (continued)

4. Laser cutting apertures with trapezoidal walls and rounded corners may offer better paste release. IPC-7525 may have alternate design recommendations.

重要通知和免责声明

TI“按原样”提供技术和可靠性数据（包括数据表）、设计资源（包括参考设计）、应用或其他设计建议、网络工具、安全信息和其他资源，不保证没有瑕疵且不做出任何明示或暗示的担保，包括但不限于对适销性、与某特定用途的适用性或不侵犯任何第三方知识产权的暗示担保。

这些资源可供使用 TI 产品进行设计的熟练开发人员使用。您将自行承担以下全部责任：(1) 针对您的应用选择合适的 TI 产品，(2) 设计、验证并测试您的应用，(3) 确保您的应用满足相应标准以及任何其他安全、安保法规或其他要求。

这些资源如有变更，恕不另行通知。TI 授权您仅可将这些资源用于研发本资源所述的 TI 产品的相关应用。严禁以其他方式对这些资源进行复制或展示。您无权使用任何其他 TI 知识产权或任何第三方知识产权。对于因您对这些资源的使用而对 TI 及其代表造成的任何索赔、损害、成本、损失和债务，您将全额赔偿，TI 对此概不负责。

TI 提供的产品受 TI 销售条款)、TI 通用质量指南 或 ti.com 上其他适用条款或 TI 产品随附的其他适用条款的约束。TI 提供这些资源并不会扩展或以其他方式更改 TI 针对 TI 产品发布的适用的担保或担保免责声明。 除非德州仪器 (TI) 明确将某产品指定为定制产品或客户特定产品，否则其产品均为按确定价格收入目录的标准通用器件。

TI 反对并拒绝您可能提出的任何其他或不同的条款。

版权所有 © 2025，德州仪器 (TI) 公司

最后更新日期：2025 年 10 月