bq24715 2-3 节窄电压直流 (NVDC)-1 电池充电器控制器 具有超快速瞬态响应和高轻负载效率

1 特性

- 6-24V 输入系统管理总线 (SMBus) NVDC-1 2-3S 电池充电器控制器
- 无电池或深度放电电池工作时系统瞬时接通运行
- 100µs 的超快速瞬态响应
- 500µA 的超低静态电流，以及 20mA 负载时高脉冲频率调制 (PFM) 轻负载效率，以符合能源之星 (Energy Star) 和能源相关产品 (ErP) Lot6 规范
- 开关频率：600kHz/800kHz/1MHz
- 具有高精度的可编程系统/充电电压（每步长 16mV），输入/充电电流（每步长 64mA）
  - 充电电压稳压范围为 ±0.5%
  - ±3% 输入/充电电流调节
  - ±2% 40x 输入 / 16x 充电电流监控输出
- 支持电池 LEARN（学习）功能
- 在深度放电电池或无电池时最大限度地提高 CPU 性能
- 集成 NMOS ACFET 和 RBFET 驱动器
- 20 引脚 3.5mm x 3.5mm^2 四方扁平无引线 (QFN) Package

2 应用范围

- Ultrabook，笔记本计算机和平板个人电脑
- 工业用和医疗用设备
- 便携式设备

3 说明

bq24715 是一款 NVDC-1 同步电池充电控制器，此充电器具有针对 2S 或 3S 锂离子电池充电应用的低静态电流、高轻负载效率，从而提供低组件数量。

电源路径管理可实现系统在电池电压上的电压调节，但是不会下降到低于可编程系统最低电压以下。

bq24715 提供针对电源路径管理的 N 通道 ACFET 和 RBFET 驱动器。 它还提供外部 P 通道电池 FET 的驱动器。 环路补偿是完全集成的。

bq24715 通过 SMBus 通信接口提供具有极高稳压精度的可编程 11 位充电电压，7 位输入/充电电流和 6 位最低系统电压。

bq24715 通过 IOUT 引脚监控适配器电流或电池放电电流，从而使主机能够在需要时减低 CPU 速度。

bq24715 提供针对过流、过压和 MOSFET 短路的广泛安全特性。

器件信息

器件名称	封装（引脚）	封装尺寸
bq24715	超薄四方扁平无引线封装 (VQFN) (20)	3.5mm x 3.5mm

Simplified Application Diagram

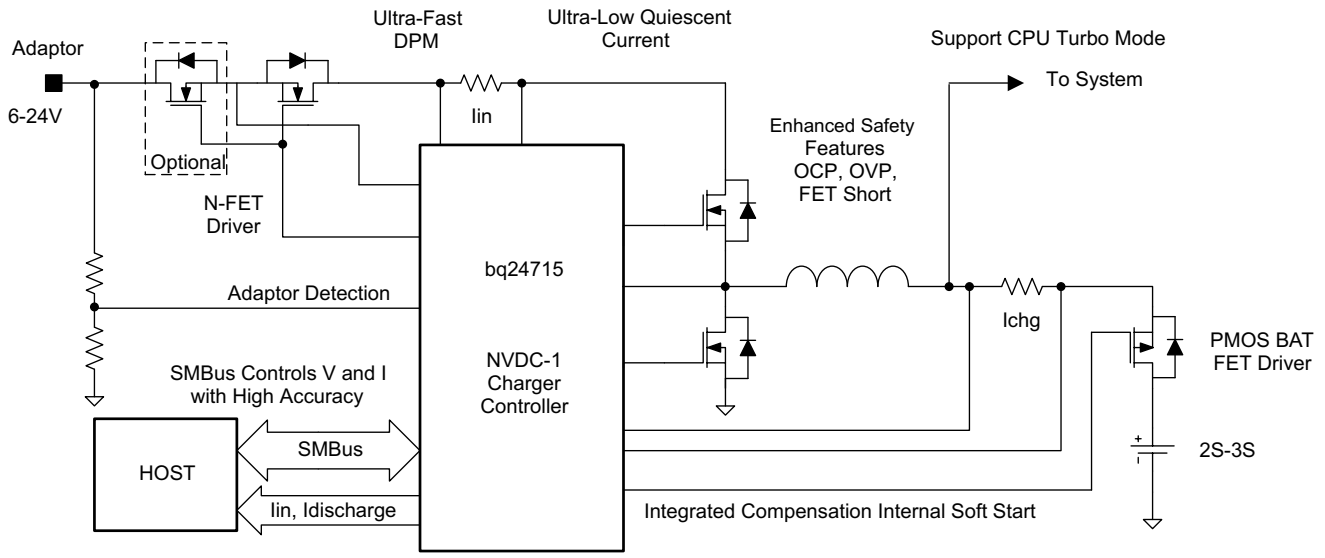

PRODUCTION DATA information is current as of publication date. Products conform to specifications per the terms of the Texas Instruments standard warranty. Production processing does not necessarily include testing of all parameters.

4 修订历史记录

NOTE: Page numbers for previous revisions may differ from page numbers in the current version.

Changes from Original (March 2013) to Revision A	Page
• 已添加 器件型号至标题，并已按照全新的数据表模板添加器件信息表	1

要获得完整数据表，请通过 电子邮件 与 TI 联系。

版权 © 2013–2014, Texas Instruments Incorporated

PACKAGING INFORMATION

Orderable part number	Status (1)	Material type (2)	Package | Pins	Package qty | Carrier	RoHS (3)	Lead finish/ Ball material (4)	MSL rating/ Peak reflow (5)	Op temp (°C)	Part marking (6)
BQ24715RGRR	Active	Production	VQFN (RGR) | 20	3000 | LARGE T&R	Yes	NIPDAU | SN	Level-2-260C-1 YEAR	-20 to 125	BQ715
BQ24715RGRR.A	Active	Production	VQFN (RGR) | 20	3000 | LARGE T&R	Yes	NIPDAU	Level-2-260C-1 YEAR	-20 to 125	BQ715
BQ24715RGRT	Active	Production	VQFN (RGR) | 20	250 | SMALL T&R	Yes	Call TI | Sn	Level-1-260C-UNLIM	-20 to 125	BQ715
BQ24715RGRT.A	Active	Production	VQFN (RGR) | 20	250 | SMALL T&R	Yes	Call TI | Sn	Level-1-260C-UNLIM	-20 to 125	BQ715

(1) **Status:** For more details on status, see our product life cycle.

(2) **Material type:** When designated, preproduction parts are prototypes/experimental devices, and are not yet approved or released for full production. Testing and final process, including without limitation quality assurance, reliability performance testing, and/or process qualification, may not yet be complete, and this item is subject to further changes or possible discontinuation. If available for ordering, purchases will be subject to an additional waiver at checkout, and are intended for early internal evaluation purposes only. These items are sold without warranties of any kind.

(3) **RoHS values:** Yes, No, RoHS Exempt. See the TI RoHS Statement for additional information and value definition.

(4) **Lead finish/Ball material:** Parts may have multiple material finish options. Finish options are separated by a vertical ruled line. Lead finish/Ball material values may wrap to two lines if the finish value exceeds the maximum column width.

(5) **MSL rating/Peak reflow:** The moisture sensitivity level ratings and peak solder (reflow) temperatures. In the event that a part has multiple moisture sensitivity ratings, only the lowest level per JEDEC standards is shown. Refer to the shipping label for the actual reflow temperature that will be used to mount the part to the printed circuit board.

(6) **Part marking:** There may be an additional marking, which relates to the logo, the lot trace code information, or the environmental category of the part.

Multiple part markings will be inside parentheses. Only one part marking contained in parentheses and separated by a "~" will appear on a part. If a line is indented then it is a continuation of the previous line and the two combined represent the entire part marking for that device.

Important Information and Disclaimer: The information provided on this page represents TI's knowledge and belief as of the date that it is provided. TI bases its knowledge and belief on information provided by third parties, and makes no representation or warranty as to the accuracy of such information. Efforts are underway to better integrate information from third parties. TI has taken and continues to take reasonable steps to provide representative and accurate information but may not have conducted destructive testing or chemical analysis on incoming materials and chemicals. TI and TI suppliers consider certain information to be proprietary, and thus CAS numbers and other limited information may not be available for release.

In no event shall TI's liability arising out of such information exceed the total purchase price of the TI part(s) at issue in this document sold by TI to Customer on an annual basis.

TAPE AND REEL INFORMATION

REEL DIMENSIONS

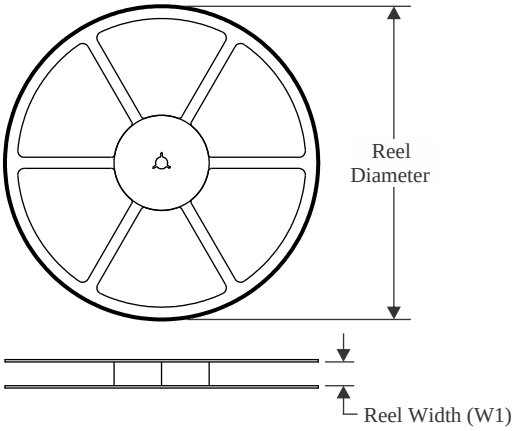

TAPE DIMENSIONS

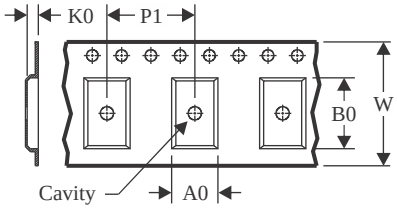

A0	Dimension designed to accommodate the component width
B0	Dimension designed to accommodate the component length
K0	Dimension designed to accommodate the component thickness
W	Overall width of the carrier tape
P1	Pitch between successive cavity centers

QUADRANT ASSIGNMENTS FOR PIN 1 ORIENTATION IN TAPE

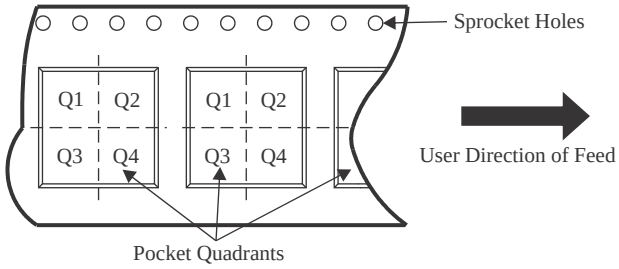

*All dimensions are nominal

Device	Package Type	Package Drawing	Pins	SPQ	Reel Diameter (mm)	Reel Width W1 (mm)	A0 (mm)	B0 (mm)	K0 (mm)	P1 (mm)	W (mm)	Pin1 Quadrant
BQ24715RGRR	VQFN	RGR	20	3000	330.0	12.4	3.75	3.75	1.15	8.0	12.0	Q2

TAPE AND REEL BOX DIMENSIONS

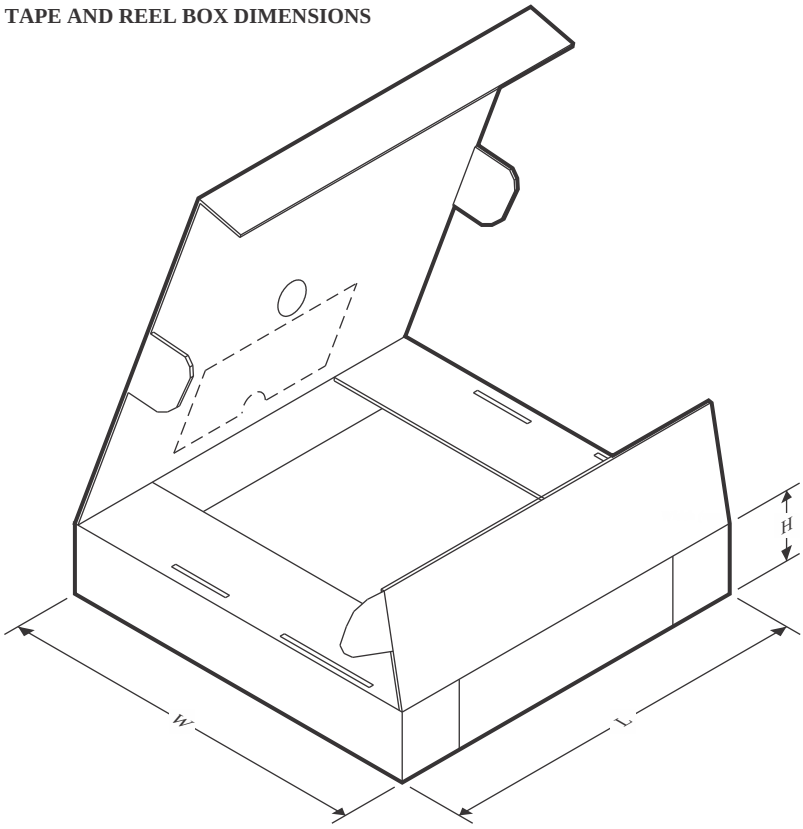

*All dimensions are nominal

Device	Package Type	Package Drawing	Pins	SPQ	Length (mm)	Width (mm)	Height (mm)
BQ24715RGRR	VQFN	RGR	20	3000	356.0	356.0	36.0

GENERIC PACKAGE VIEW

RGR 20

VQFN - 1 mm max height

3.5 x 3.5, 0.5 mm pitch

PLASTIC QUAD FLATPACK - NO LEAD

This image is a representation of the package family, actual package may vary.
Refer to the product data sheet for package details.

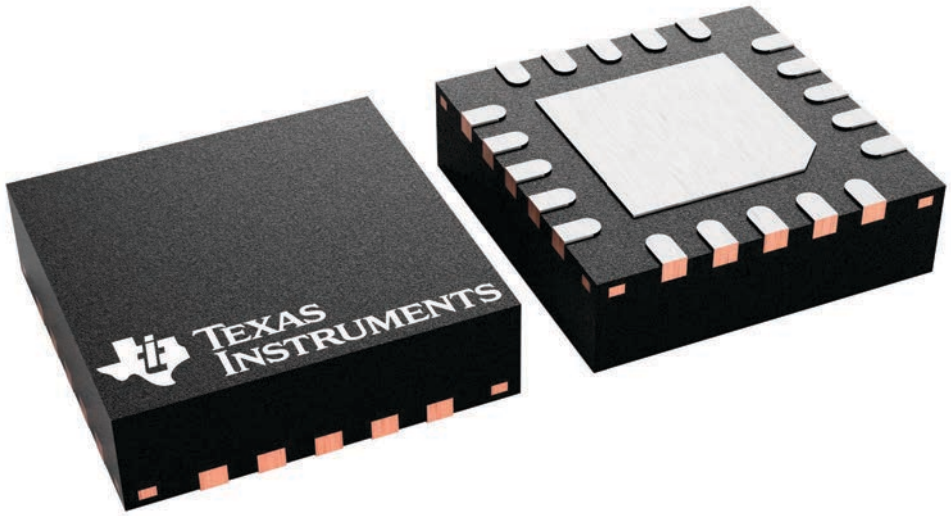

4228482/A

PACKAGE OUTLINE

RGR0020A

VQFN - 1 mm max height

PLASTIC QUAD FLATPACK - NO LEAD

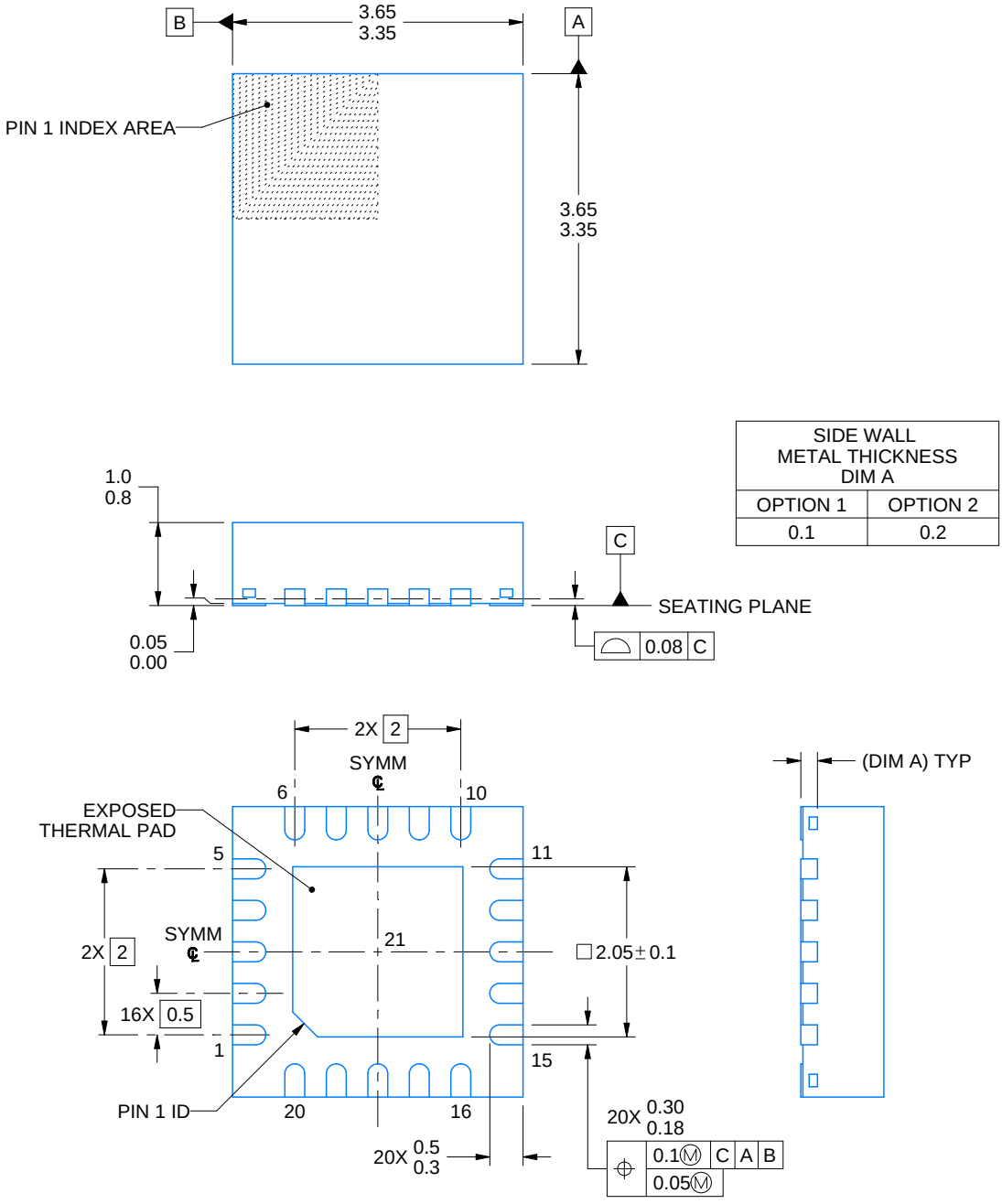

SIDE WALL METAL THICKNESS DIM A	
OPTION 1	OPTION 2
0.1	0.2

4219031/B 04/2022

NOTES:

1. All linear dimensions are in millimeters. Any dimensions in parenthesis are for reference only. Dimensioning and tolerancing per ASME Y14.5M.
2. This drawing is subject to change without notice.
3. The package thermal pad must be soldered to the printed circuit board for thermal and mechanical performance.

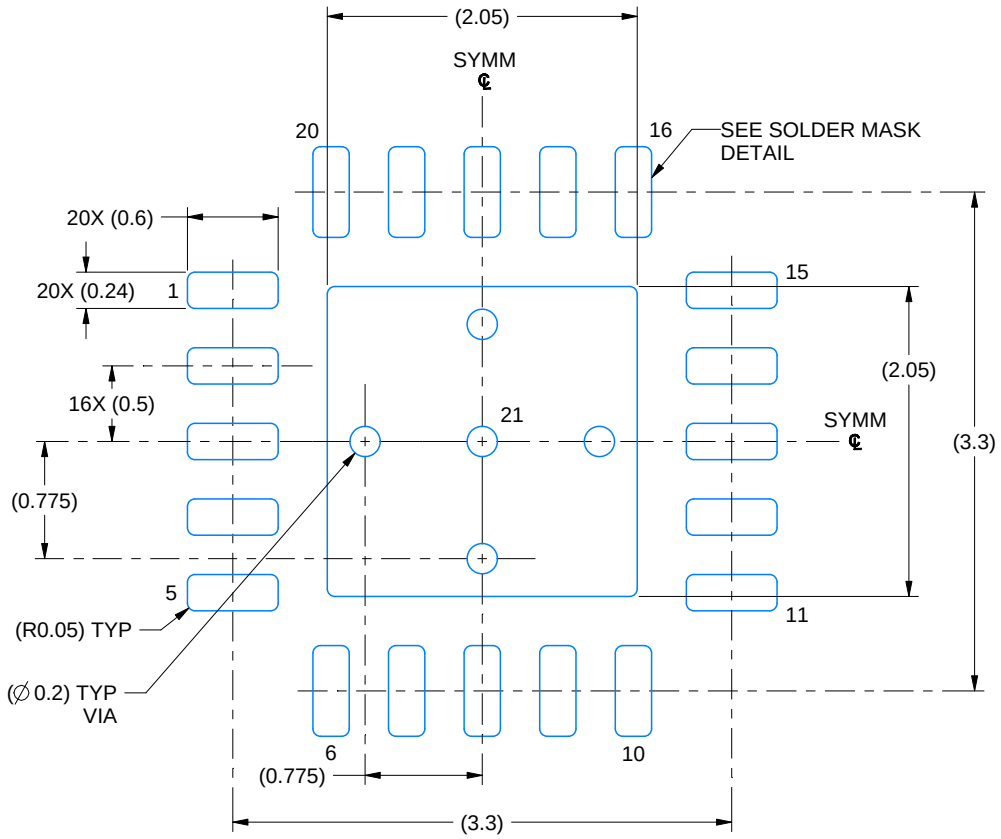

LAND PATTERN EXAMPLE
EXPOSED METAL SHOWN
SCALE: 20X

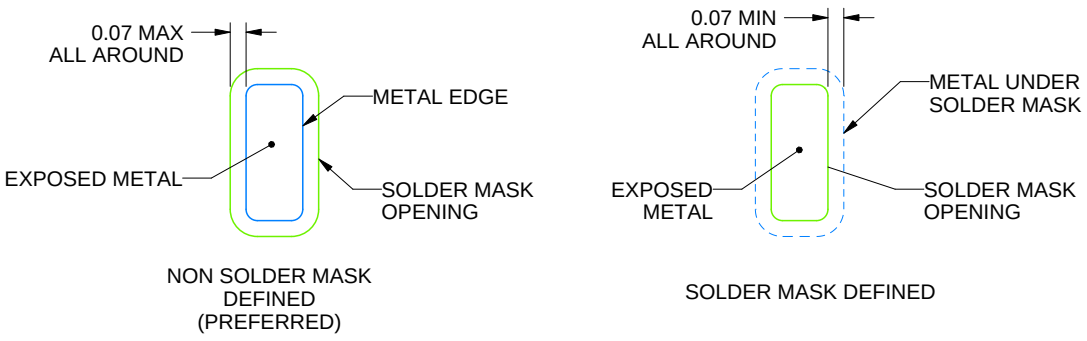

SOLDER MASK DETAILS

4219031/B 04/2022

NOTES: (continued)

4. This package is designed to be soldered to a thermal pad on the board. For more information, see Texas Instruments literature number SLUA271 (www.ti.com/lit/slua271).
5. Vias are optional depending on application, refer to device data sheet. If any vias are implemented, refer to their locations shown on this view. It is recommended that vias under paste be filled, plugged or tented.

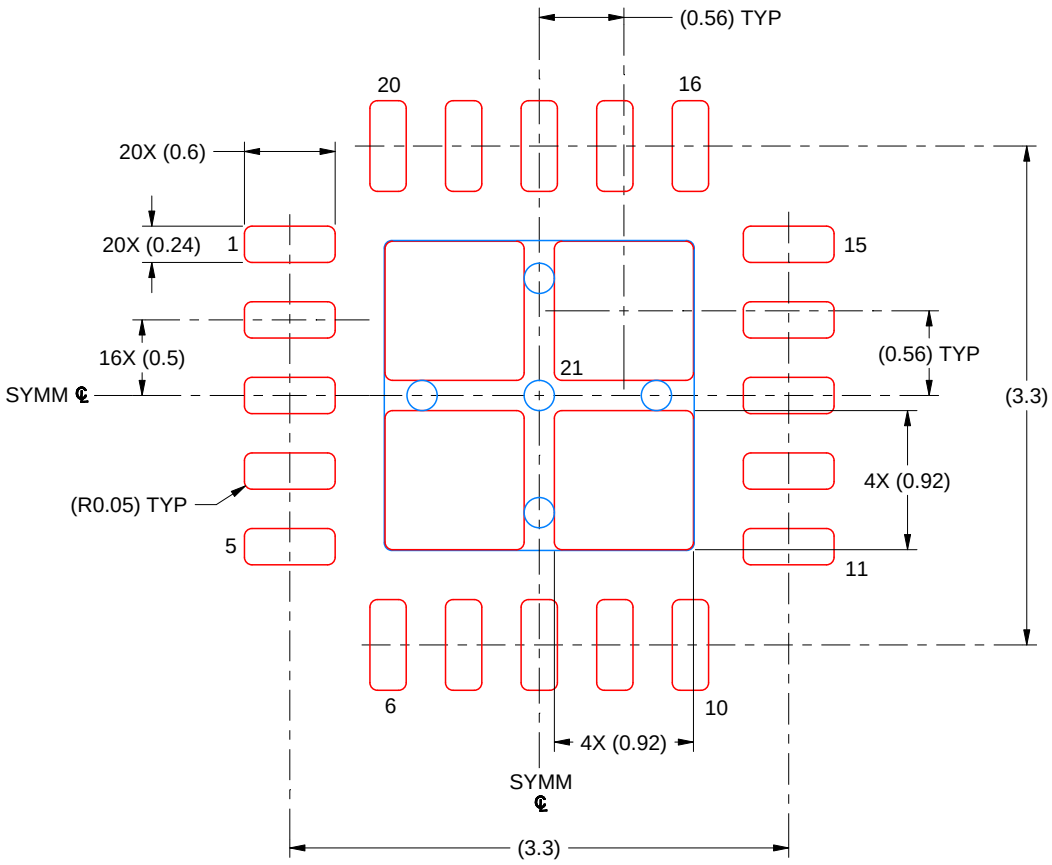

SOLDER PASTE EXAMPLE
BASED ON 0.125 MM THICK STENCIL
SCALE: 20X

EXPOSED PAD 21
81% PRINTED SOLDER COVERAGE BY AREA UNDER PACKAGE

4219031/B 04/2022

NOTES: (continued)

6. Laser cutting apertures with trapezoidal walls and rounded corners may offer better paste release. IPC-7525 may have alternate design recommendations.

重要通知和免责声明

TI“按原样”提供技术和可靠性数据（包括数据表）、设计资源（包括参考设计）、应用或其他设计建议、网络工具、安全信息和其他资源，不保证没有瑕疵且不做出任何明示或暗示的担保，包括但不限于对适销性、与某特定用途的适用性或不侵犯任何第三方知识产权的暗示担保。

这些资源可供使用 TI 产品进行设计的熟练开发人员使用。您将自行承担以下全部责任：(1) 针对您的应用选择合适的 TI 产品，(2) 设计、验证并测试您的应用，(3) 确保您的应用满足相应标准以及任何其他安全、安保法规或其他要求。

这些资源如有变更，恕不另行通知。TI 授权您仅可将这些资源用于研发本资源所述的 TI 产品的相关应用。严禁以其他方式对这些资源进行复制或展示。您无权使用任何其他 TI 知识产权或任何第三方知识产权。对于因您对这些资源的使用而对 TI 及其代表造成的任何索赔、损害、成本、损失和债务，您将全额赔偿，TI 对此概不负责。

TI 提供的产品受 TI 销售条款)、TI 通用质量指南 或 ti.com 上其他适用条款或 TI 产品随附的其他适用条款的约束。TI 提供这些资源并不会扩展或以其他方式更改 TI 针对 TI 产品发布的适用的担保或担保免责声明。 除非德州仪器 (TI) 明确将某产品指定为定制产品或客户特定产品，否则其产品均为按确定价格收入目录的标准通用器件。

TI 反对并拒绝您可能提出的任何其他或不同的条款。

版权所有 © 2026，德州仪器 (TI) 公司

最后更新日期：2025 年 10 月