TEXAS INSTRUMENTS
CD54HC259, CD74HC259, CD54HCT259, CD74HCT259
ZHCSPC0D – NOVEMBER 1997 – REVISED NOVEMBER 2021

CDx4HC(T)259 高速 SMOS 逻辑 8 位可寻址锁存器

1 特性

- 缓冲输入和输出
- 四个工作模式
- 当 V_{CC} = 5V、C_L = 15pF、T_A = 25ºC 时的传播延迟典型值
- 扇出（在温度范围内）
  - 标准输出：10 个 LSTTL 负载
  - 总线驱动器输出：15 个 LSTTL 负载
- 宽工作温度范围：-55ºC 至 125ºC
- 平衡的传播延迟及转换时间
- 与 LSTTL 逻辑 IC 相比，可显著降低功耗
- HC 类型
  - 工作电压为 2 V 至 6 V
  - 高抗噪性：当 V_{CC} = 5 V 时，N_{IL} = 30%，N_{IH} = V_{CC} 的 30%
- HCT 类型
  - 工作电压为 4.5 V 至 5.5 V
  - 直接 LSTTL 输入逻辑兼容性，V_{IL} = 0.8V（最大值），V_{IH} = 2V（最小值）
  - CMOS 输入兼容性，当电压为 V_{OL}、V_{OH} 时，I_I ≤ 1µA

2 说明

CDx4HC(T)259 是具有三个有效工作模式（可寻址锁存器、存储器和 8 线解码器）和一个复位模式的 8 位可寻址锁存器。

器件信息

器件型号	封装[1]	封装尺寸（标称值）
CD54HC259F3A	陶瓷双列直插封装 (CDIP) (16)	21.34mm × 6.92mm
CD54HCT259F3A	陶瓷双列直插封装 (CDIP) (16)	21.34mm × 6.92mm
CD74HC259E	PDIP (16)	19.31mm × 6.35mm
CD74HCT259E	PDIP (16)	19.31mm × 6.35mm
CD74HC259M	SOIC (16)	9.90mm × 3.90mm
CD74HCT259M	SOIC (16)	9.90mm × 3.90mm

(1) 如需了解所有封装，请参阅数据表末尾的可订购产品附录。

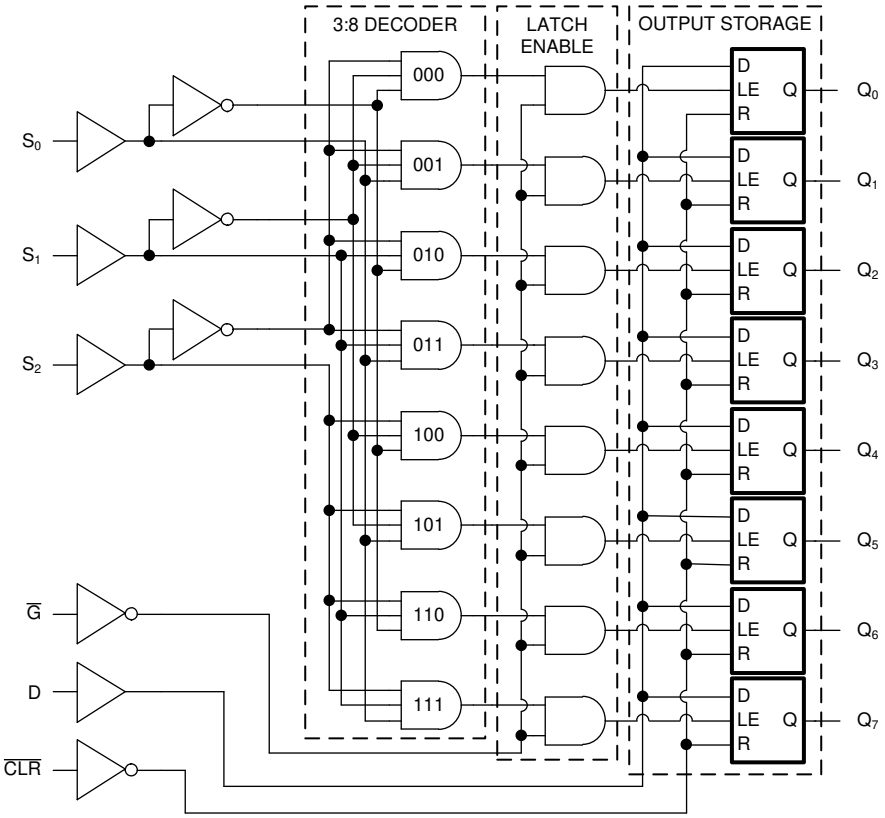

功能框图

本文档旨在为方便起见，提供有关 TI 产品中文版本的信息，以确认产品的概要。有关适用的官方英文版本的最新信息，请访问 www.ti.com，其内容始终优先。TI 不保证翻译的准确性和有效性。在实际设计之前，请务必参考最新版本的英文版本。

Table of Contents

1 特性.....1
2 说明.....1
3 Revision History.....2
4 Pin Configuration and Functions.....3
5 Specifications.....4
5.1 Absolute Maximum Ratings.....4
5.2 Recommended Operating Conditions.....4
5.3 Thermal Information.....4
5.4 Electrical Characteristics.....5
5.5 Prerequisite for Switching Characteristics.....6
5.6 Switching Characteristics(2).....7
6 Parameter Measurement Information.....8
7 Detailed Description.....10
7.1 Overview.....10
7.2 Functional Block Diagram.....10
7.3 Device Functional Modes.....11
8 Power Supply Recommendations.....12
9 Layout.....12
9.1 Layout Guidelines.....12
10 Device and Documentation Support.....13
10.1 Documentation Support.....13
10.2 接收文档更新通知.....13
10.3 支持资源.....13
10.4 Trademarks.....13
10.5 Electrostatic Discharge Caution.....13
10.6 术语表.....13
11 Mechanical, Packaging, and Orderable Information.....13

3 Revision History

注：以前版本的页码可能与当前版本的页码不同

Changes from Revision C (October 2003) to Revision D (November 2021)	Page
• 更新了整个文档中的编号、格式、表格、图和交叉参考，以反映现代数据表标准	1
• Updated pin names to match current TI naming conventions. A_0 is now S_0, A_1 is now S_1, A_2 is now S_2	3

Copyright © 2022 Texas Instruments Incorporated

4 Pin Configuration and Functions

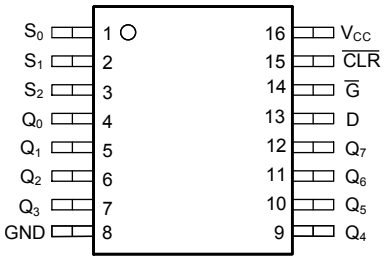

J, D or PW Package
16-Pin CDIP, SOIC or TSSOP
Top View

5 Specifications

5.1 Absolute Maximum Ratings

Over operating free-air temperature range (unless otherwise noted)[1]

			MIN	MAX	UNIT
V_{CC}	Supply voltage		-0.5	7	V
I_{IK}	Input clamp diode current	For V_I < -0.5V or V_I > V_{CC} + 0.5V		±20	mA
I_{OK}	Output clamp diode current	For V_O < -0.5V or V_O > V_{CC} + 0.5V		±20	mA
I_O	Drain current, per output	For -0.5V < V_O < V_{CC} + 0.5V		±25	mA
I_O	Output source or sink current per output pin	For V_O > -0.5V or V_O < V_{CC} + 0.5V		±25	mA
	Continuous current through V_{CC} or GND			±50	mA
T_J	Junction temperature			150	°C
T_{stg}	Storage temperature		-65	150	°C
	Lead temperature (Soldering 10s) (SOIC - lead tips only)			300	°C

(1) Stresses beyond those listed under *absolute maximum ratings* may cause permanent damage to the device. These are stress ratings only and functional operation of the device at these or any other conditions beyond those indicated under *recommended operating conditions* is not implied. Exposure to absolute-maximum-rated conditions for extended periods may affect device reliability.

5.2 Recommended Operating Conditions

			MIN	MAX	UNIT
V_{CC}	Supply voltage range	HC Types	2	6	V
		HCT Types	4.5	5.5	
V_I	Input voltage		0	V_{CC}	V
V_O	Output voltage		0	V_{CC}	V
t_t	Input rise and fall time	V_{CC} = 2V		1000	ns
		V_{CC} = 4.5V		500	
		V_{CC} = 6V		400	
T_A	Temperature range		-55	125	°C

5.3 Thermal Information

THERMAL METRIC		CD74HC259, CD74HCT259 N (PDIP) 16 PINS	CD74HC259, CD74HCT259 D (SOIC) 16 PINS	UNIT
$R_{\theta JA}$	Junction-to-ambient thermal resistance[1]	67	73	°C/W

(1) For more information about traditional and new thermal metrics, see the Semiconductor and IC Package Thermal Metrics application report.

Copyright © 2022 Texas Instruments Incorporated

5.4 Electrical Characteristics

PARAMETER		TEST CONDITIONS	V_{CC} (V)	25°C			-40°C to 85°C		-55°C to 125°C		UNIT
				MIN	TYP	MAX	MIN	MAX	MIN	MAX	
HC TYPES											
V_{IH}	High-level input voltage		2	1.5			1.5		1.5		V
			4.5	3.15			3.15		3.15		V
			6	4.2			4.2		4.2		V
V_{IL}	Low-level input voltage		2			0.5		0.5		0.5	V
			4.5			1.35		1.35		1.35	V
			6			1.8		1.8		1.8	V
V_{OH}	High-level output voltage	I_{OH} = – 20 µA	2	1.9			1.9		1.9		V
		I_{OH} = – 20 µA	4.5	4.4			4.4		4.4		V
		I_{OH} = – 20 µA	6	5.9			5.9		5.9		V
	High-level output voltage	I_{OH}= – 4 mA	4.5	3.98			3.84		3.7		V
		I_{OH} = – 5.2 mA	6	5.48			5.34		5.2		V
V_{OL}	Low-level output voltage	I_{OL} = 20 µA	2			0.1		0.1		0.1	V
		I_{OL} = 20 µA	4.5			0.1		0.1		0.1	V
		I_{OL} = 20 µA	6			0.1		0.1		0.1	V
	Low-level output voltage	I_{OL}= 4 mA	4.5			0.26		0.33		0.4	V
		I_{OL} = 5.2 mA	6			0.26		0.33		0.4	V
I_I	Input leakage current	V_I = V_{CC} or GND	6			±0.1		±1		±1	µA
I_{CC}	Supply current	V_I = V_{CC} or GND	6			8		80		160	µA
HCT TYPES											
V_{IH}	High-level input voltage		4.5 to 5.5	2			2		2		V
V_{IL}	Low-level input voltage		4.5 to 5.5			0.8		0.8		0.8	V
V_{OH}	High-level output voltage	V_{OH} = – 20 µA	4.5	4.4			4.4		4.4		V
	HIgh-level output voltage	V_{OH} = – 4 mA	4.5	3.98			3.84		3.7		V
V_{OL}	Low-level output voltage	V_{OL} = 20 µA	4.5			0.1		0.1		0.1	V
	Low-level output voltage	V_{OL} = 4 mA	4.5			0.26		0.33		0.4	V
I_I	Input leakage current	V_I = V_{CC} or GND	5.5			±0.1		±1		±1	µA
I_{CC}	Supply current	V_I = V_{CC} or GND	5.5			8		80		160	µA
ΔI_{CC}(1)	Additional supply current per input pin	One of A0 - A2 and $\overline{LE}$ inputs held at V_{CC} – 2.1	4.5 to 5.5		100	540		675		735	µA
		D input held at V_{CC} – 2.1	4.5 to 5.5		100	432		540		588	
		$\overline{MR}$ input held at V_{CC} – 2.1	4.5 to 5.5		100	270		337.5		367.5	

(1) V_I = V_{IH} or V_{IL}, unless otherwise noted.

Copyright © 2022 Texas Instruments Incorporated

5.5 Prerequisite for Switching Characteristics

PARAMETER		V_{CC} (V)	25°C			-40°C to 85°C			-55°C to 125°C			UNIT
			MIN	TYP	MAX	MIN	TYP	MAX	MIN	TYP	MAX	
HC TYPES												
t_{WL}	Pulse Width $\overline{G}$	2	70			90			105			ns
		4.5	14			18			21			
		5	12			15			18			
t_{WL}	$\overline{CLR}$	2	70			90			105			ns
		4.5	14			18			21			
		6	12			15			18			
t_{SU}	Setup time D to $\overline{G}$ S to $\overline{G}$	2	80			100			120			ns
		4.5	16			20			24			
		6	14			17			20			
t_H	Hold time D to $\overline{G}$ S to $\overline{G}$	2	0			0			0			ns
		4.5	0			0			0			
		6	0			0			0			
HCT TYPES												
t_{WL}	Pulse width $\overline{G}$ $\overline{CLR}$	4.5	18			23			27			ns
t_{SU}	Setup Time D to $\overline{G}$ S to $\overline{G}$	4.5	17			21			26			ns
t_H	Hold Time D to $\overline{G}$ S to $\overline{G}$	4.5	0			0			0			pF

Copyright © 2022 Texas Instruments Incorporated

5.6 Switching Characteristics[2]

C_L = 50pF, Input t_t = 6ns

PARAMETER		V_{CC} (V)	25°C			-40°C to 85°C		-55°C to 125°C		UNIT
			MIN	TYP	MAX	MIN	MAX	MIN	MAX	
HC TYPES										
t_{pd}	D to Q	2			185		230		280	ns
		4.5		15[1]	37		46		56	
		6			31		39		48	
	$\overline{G}$ to Q	2			170		215		255	ns
		4.5		14[1]	34		43		51	
		6			29		37		43	
	S to Q	2			185		230		280	ns
		4.5		15[1]	37		46		56	
		6			31		39		48	
	$\overline{CLR}$ to Q	2			155		195		235	ns
		4.5		13[1]	31		39		47	
		6			26		33		40	
t_t	Output transition time	2			75		95		110	ns
		4.5			15		19		22	
		6			13		16		19	
C_{pd}	Power dissipation Capacitance[1]	5		21[1]						pF
C_i	Input capacitance		10		10	10		10		pF
HCT TYPES										
t_{pd}	D to Q	4.5		16[1]	39		49		59	ns
	$\overline{G}$ to Q	4.5		16[1]	38		48		57	ns
	S to Q	4.5		17[1]	41		51		61	ns
	$\overline{CLR}$ to Q	4.5		16[1]	39		49		59	pF
C_{pd}	Power dissipaction Capacitance[1]	5		22[1]						pF
C_i	Input Capacitance		10		10	10		10		pF
t_t	Output transition time	4.5			15		19		22	ns

(1) C_L = 15pF and V_{CC} = 5 V.
(2) For details on CMOS power calculation see, SCAA053B.

Copyright © 2022 Texas Instruments Incorporated

6 Parameter Measurement Information

Phase relationships between waveforms were chosen arbitrarily. All input pulses are supplied by generators having the following characteristics: PRR ≤ 1 MHz, Z_O = 50 Ω, t_t < 6 ns.

For clock inputs, f_{max} is measured when the input duty cycle is 50%.

The outputs are measured one at a time with one input transition per measurement.

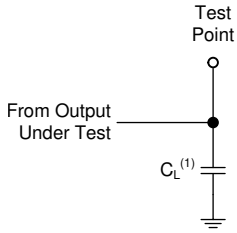

(1) C_L includes probe and test-fixture capacitance.

图 6-1. Load Circuit for Push-Pull Outputs

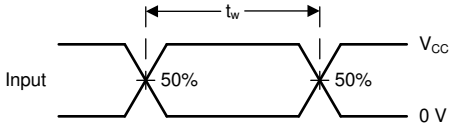

图 6-2. Voltage Waveforms, Standard CMOS Inputs Pulse Duration

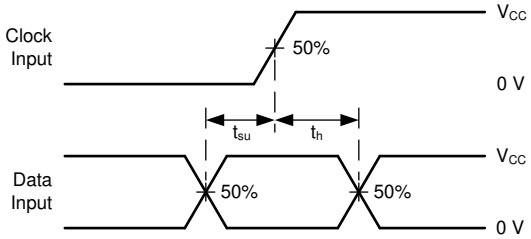

图 6-3. Voltage Waveforms, Standard CMOS Inputs Setup and Hold Times

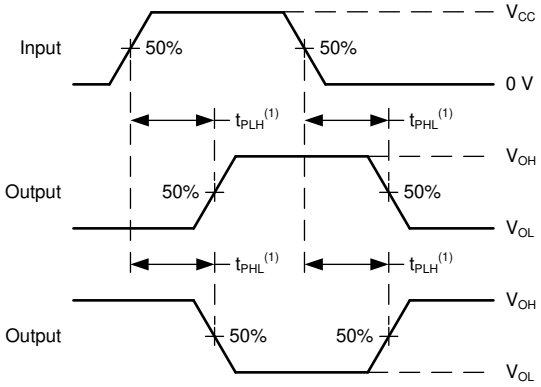

(1) The greater between t_{PLH} and t_{PHL} is the same as t_{pd}.

图 6-4. Voltage Waveforms, Propagation Delays for Standard CMOS Inputs

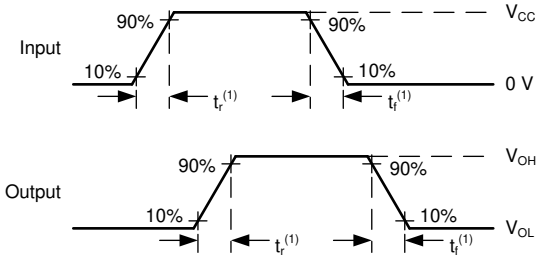

(1) The greater between t_r and t_f is the same as t_t.

图 6-5. Voltage Waveforms, Input and Output Transition Times for Standard CMOS Inputs

Copyright © 2022 Texas Instruments Incorporated

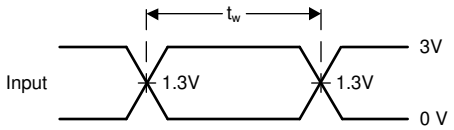

图 6-6. Voltage Waveforms, TTL-Compatible CMOS Inputs Pulse Duration

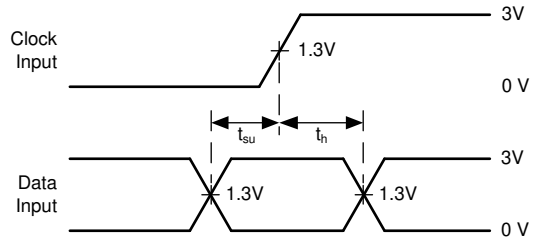

图 6-7. Voltage Waveforms, TTL-Compatible CMOS Inputs Setup and Hold Times

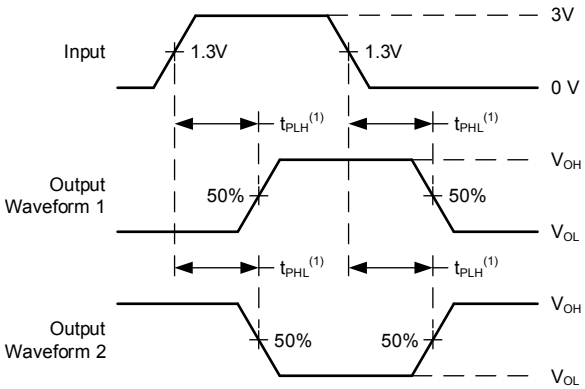

(1) The greater between t_{PLH} and t_{PHL} is the same as t_{pd}.

图 6-8. Voltage Waveforms, Propagation Delays for TTL-Compatible Inputs

Copyright © 2022 Texas Instruments Incorporated

7 Detailed Description

7.1 Overview

The CDx4HC(T)259 8-bit addressable latches are designed for general-purpose storage applications in digital systems. Specific uses include working registers, serial-holding registers, and active-high decoders or demultiplexers. They are multifunctional devices capable of storing single-line data in eight addressable latches and being a 1-of-8 decoder or demultiplexer with active-high outputs.

Four distinct modes of operation are selectable by controlling the clear ($\overline{CLR}$) and enable ($\overline{G}$) inputs:

- Addressable-latch mode: $\overline{CLR}$ = HIGH; $\overline{G}$ = LOW
  - Data at the data-in terminal is written into the addressed latch
  - The addressed latch follows the data input, with all unaddressed latches remaining in their previous states
- Memory mode: $\overline{CLR}$ = HIGH; $\overline{G}$ = HIGH
  - All latches remain in their previous states and are unaffected by the data or address inputs
  - To eliminate the possibility of entering erroneous data in the latches, $\overline{G}$ should be held high (inactive) while the address lines are changing
- 1-of-8 decoding or demultiplexing mode: $\overline{CLR}$ = LOW; $\overline{G}$ = LOW
  - The addressed output follows the level of the D input with all other outputs low
- Clear mode: $\overline{CLR}$ = LOW; $\overline{G}$ = HIGH
  - All outputs are low and unaffected by the address and data inputs

7.2 Functional Block Diagram

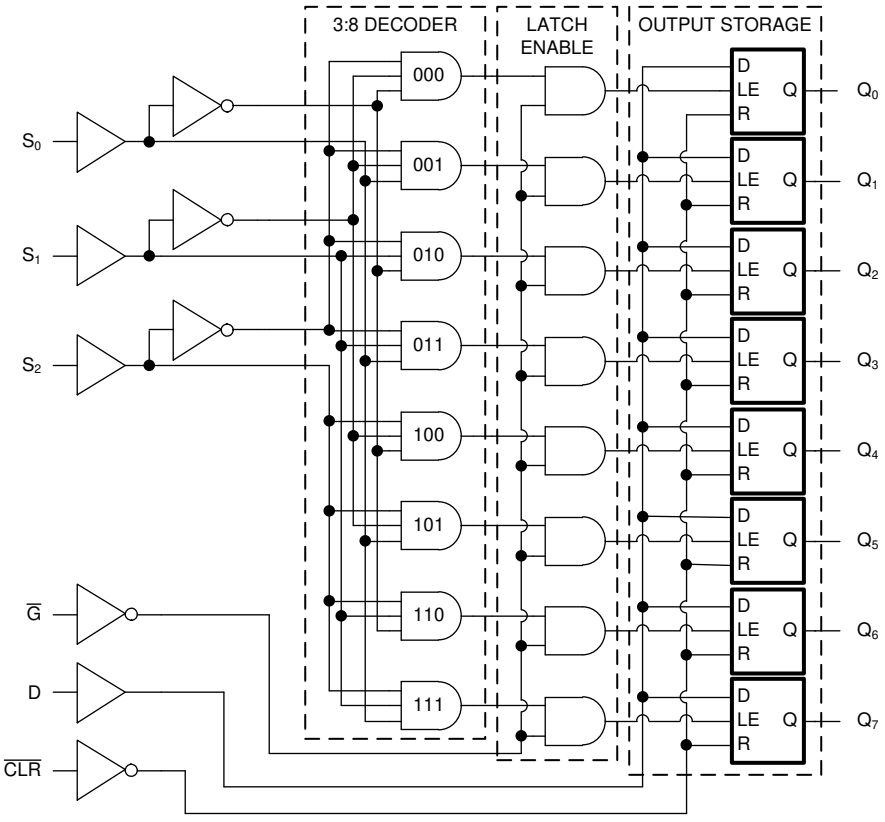

Copyright © 2022 Texas Instruments Incorporated

7.3 Device Functional Modes

The Function Tableand Latch Selection Table below list the functional modes of the CDx4HC(T)259.

表 7-1. Function Table

INPUTS(1)		OUTPUT OF ADDRESSED LATCH(2)	EACH OTHER OUTPUT(2)	FUNCTION
$\overline{CLR}$	$\overline{G}$			
H	L	D	Q_{iO}	Addressable latch
H	H	Q_{iO}	Q_{iO}	Memory
L	L	D	L	8-line demultiplexer
L	H	L	L	Clear

(1) H = High voltage level, L = Low voltage level
(2) Q_{iO} = Previous output state of selected latch, D = Data input logic value

表 7-2. Latch Selection Table

SELECT INPUTS(1)			LATCH ADDRESSED
S2	S1	S0	
L	L	L	0
L	L	H	1
L	H	L	2
L	H	H	3
H	L	L	4
H	L	H	5
H	H	L	6
H	H	H	7

(1) H = High Voltage Level, L = Low Voltage Level

Copyright © 2022 Texas Instruments Incorporated

8 Power Supply Recommendations

The power supply can be any voltage between the minimum and maximum supply voltage rating located in the *Recommended Operating Conditions*. Each V_{CC} terminal should have a good bypass capacitor to prevent power disturbance. A 0.1-μF capacitor is recommended for this device. It is acceptable to parallel multiple bypass caps to reject different frequencies of noise. The 0.1-μF and 1-μF capacitors are commonly used in parallel. The bypass capacitor should be installed as close to the power terminal as possible for best results.

9 Layout

9.1 Layout Guidelines

When using multiple-input and multiple-channel logic devices inputs must not ever be left floating. In many cases, functions or parts of functions of digital logic devices are unused; for example, when only two inputs of a triple-input AND gate are used or only 3 of the 4 buffer gates are used. Such unused input pins must not be left unconnected because the undefined voltages at the outside connections result in undefined operational states. All unused inputs of digital logic devices must be connected to a logic high or logic low voltage, as defined by the input voltage specifications, to prevent them from floating. The logic level that must be applied to any particular unused input depends on the function of the device. Generally, the inputs are tied to GND or V_{CC}, whichever makes more sense for the logic function or is more convenient.

Copyright © 2022 Texas Instruments Incorporated

10 Device and Documentation Support

TI offers an extensive line of development tools. Tools and software to evaluate the performance of the device, generate code, and develop solutions are listed below.

10.1 Documentation Support

10.1.1 Related Documentation

10.2 接收文档更新通知

要接收文档更新通知，请导航至 ti.com 上的器件产品文件夹。点击 *订阅更新* 进行注册，即可每周接收产品信息更改摘要。有关更改的详细信息，请查看任何已修订文档中包含的修订历史记录。

10.3 支持资源

TI E2E™ 支持论坛是工程师的重要参考资料，可直接从专家获得快速、经过验证的解答和设计帮助。搜索现有解答或提出自己的问题可获得所需的快速设计帮助。

链接的内容由各个贡献者“按原样”提供。这些内容并不构成 TI 技术规范，并且不一定反映 TI 的观点；请参阅 TI 的《使用条款》。

10.4 Trademarks

TI E2E™ is a trademark of Texas Instruments.
所有商标均为其各自所有者的财产。

10.5 Electrostatic Discharge Caution



This integrated circuit can be damaged by ESD. Texas Instruments recommends that all integrated circuits be handled with appropriate precautions. Failure to observe proper handling and installation procedures can cause damage.

ESD damage can range from subtle performance degradation to complete device failure. Precision integrated circuits may be more susceptible to damage because very small parametric changes could cause the device not to meet its published specifications.

10.6 术语表

TI 术语表　　本术语表列出并解释了术语、首字母缩略词和定义。

11 Mechanical, Packaging, and Orderable Information

The following pages include mechanical, packaging, and orderable information. This information is the most current data available for the designated devices. This data is subject to change without notice and revision of this document. For browser-based versions of this data sheet, refer to the left-hand navigation.

Copyright © 2022 Texas Instruments Incorporated

PACKAGING INFORMATION

Orderable part number	Status (1)	Material type (2)	Package | Pins	Package qty | Carrier	RoHS (3)	Lead finish/ Ball material (4)	MSL rating/ Peak reflow (5)	Op temp (°C)	Part marking (6)
5962-8985201EA	Active	Production	CDIP (J) | 16	25 | TUBE	No	SNPB	N/A for Pkg Type	-55 to 125	5962-8985201EA CD54HCT259F3A
CD54HC259F3A	Active	Production	CDIP (J) | 16	25 | TUBE	No	SNPB	N/A for Pkg Type	-55 to 125	8551901EA CD54HC259F3A
CD54HC259F3A.A	Active	Production	CDIP (J) | 16	25 | TUBE	No	SNPB	N/A for Pkg Type	-55 to 125	8551901EA CD54HC259F3A
CD54HCT259F3A	Active	Production	CDIP (J) | 16	25 | TUBE	No	SNPB	N/A for Pkg Type	-55 to 125	5962-8985201EA CD54HCT259F3A
CD54HCT259F3A.A	Active	Production	CDIP (J) | 16	25 | TUBE	No	SNPB	N/A for Pkg Type	-55 to 125	5962-8985201EA CD54HCT259F3A
CD74HC259E	Active	Production	PDIP (N) | 16	25 | TUBE	Yes	NIPDAU	N/A for Pkg Type	-55 to 125	CD74HC259E
CD74HC259E.A	Active	Production	PDIP (N) | 16	25 | TUBE	Yes	NIPDAU	N/A for Pkg Type	-55 to 125	CD74HC259E
CD74HC259M	Obsolete	Production	SOIC (D) | 16	-	-	Call TI	Call TI	-55 to 125	HC259M
CD74HC259M96	Active	Production	SOIC (D) | 16	2500 | LARGE T&R	Yes	NIPDAU | SN	Level-1-260C-UNLIM	-55 to 125	HC259M
CD74HC259M96.A	Active	Production	SOIC (D) | 16	2500 | LARGE T&R	Yes	NIPDAU	Level-1-260C-UNLIM	-55 to 125	HC259M
CD74HC259M96G4	Active	Production	SOIC (D) | 16	2500 | LARGE T&R	Yes	NIPDAU	Level-1-260C-UNLIM	-55 to 125	HC259M
CD74HC259M96G4.A	Active	Production	SOIC (D) | 16	2500 | LARGE T&R	Yes	NIPDAU	Level-1-260C-UNLIM	-55 to 125	HC259M
CD74HC259MT	Obsolete	Production	SOIC (D) | 16	-	-	Call TI	Call TI	-55 to 125	HC259M
CD74HCT259E	Active	Production	PDIP (N) | 16	25 | TUBE	Yes	NIPDAU	N/A for Pkg Type	-55 to 125	CD74HCT259E
CD74HCT259E.A	Active	Production	PDIP (N) | 16	25 | TUBE	Yes	NIPDAU	N/A for Pkg Type	-55 to 125	CD74HCT259E
CD74HCT259EE4	Active	Production	PDIP (N) | 16	25 | TUBE	Yes	NIPDAU	N/A for Pkg Type	-55 to 125	CD74HCT259E
CD74HCT259M	Obsolete	Production	SOIC (D) | 16	-	-	Call TI	Call TI	-55 to 125	HCT259M
CD74HCT259M96	Active	Production	SOIC (D) | 16	2500 | LARGE T&R	Yes	NIPDAU | SN	Level-1-260C-UNLIM	-55 to 125	HCT259M
CD74HCT259M96.A	Active	Production	SOIC (D) | 16	2500 | LARGE T&R	Yes	NIPDAU	Level-1-260C-UNLIM	-55 to 125	HCT259M
CD74HCT259M96G4	Active	Production	SOIC (D) | 16	2500 | LARGE T&R	Yes	NIPDAU	Level-1-260C-UNLIM	-55 to 125	HCT259M
CD74HCT259M96G4.A	Active	Production	SOIC (D) | 16	2500 | LARGE T&R	Yes	NIPDAU	Level-1-260C-UNLIM	-55 to 125	HCT259M
CD74HCT259MT	Obsolete	Production	SOIC (D) | 16	-	-	Call TI	Call TI	-55 to 125	HCT259M

(1) **Status:** For more details on status, see our product life cycle.

(2) **Material type:** When designated, preproduction parts are prototypes/experimental devices, and are not yet approved or released for full production. Testing and final process, including without limitation quality assurance, reliability performance testing, and/or process qualification, may not yet be complete, and this item is subject to further changes or possible discontinuation. If available for ordering, purchases will be subject to an additional waiver at checkout, and are intended for early internal evaluation purposes only. These items are sold without warranties of any kind.

(3) **RoHS values:** Yes, No, RoHS Exempt. See the TI RoHS Statement for additional information and value definition.

(4) **Lead finish/Ball material:** Parts may have multiple material finish options. Finish options are separated by a vertical ruled line. Lead finish/Ball material values may wrap to two lines if the finish value exceeds the maximum column width.

(5) **MSL rating/Peak reflow:** The moisture sensitivity level ratings and peak solder (reflow) temperatures. In the event that a part has multiple moisture sensitivity ratings, only the lowest level per JEDEC standards is shown. Refer to the shipping label for the actual reflow temperature that will be used to mount the part to the printed circuit board.

(6) **Part marking:** There may be an additional marking, which relates to the logo, the lot trace code information, or the environmental category of the part.

Multiple part markings will be inside parentheses. Only one part marking contained in parentheses and separated by a "~" will appear on a part. If a line is indented then it is a continuation of the previous line and the two combined represent the entire part marking for that device.

Important Information and Disclaimer: The information provided on this page represents TI's knowledge and belief as of the date that it is provided. TI bases its knowledge and belief on information provided by third parties, and makes no representation or warranty as to the accuracy of such information. Efforts are underway to better integrate information from third parties. TI has taken and continues to take reasonable steps to provide representative and accurate information but may not have conducted destructive testing or chemical analysis on incoming materials and chemicals. TI and TI suppliers consider certain information to be proprietary, and thus CAS numbers and other limited information may not be available for release.

In no event shall TI's liability arising out of such information exceed the total purchase price of the TI part(s) at issue in this document sold by TI to Customer on an annual basis.

OTHER QUALIFIED VERSIONS OF CD54HC259, CD54HCT259, CD74HC259, CD74HCT259 :

- Catalog : CD74HC259, CD74HCT259
- Military : CD54HC259, CD54HCT259

NOTE: Qualified Version Definitions:

- Catalog - TI's standard catalog product
- Military - QML certified for Military and Defense Applications

TAPE AND REEL INFORMATION

REEL DIMENSIONS

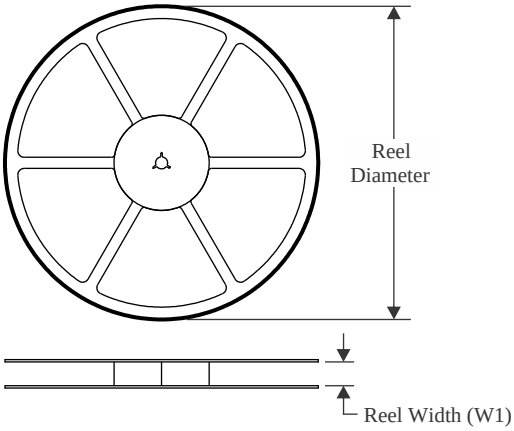

TAPE DIMENSIONS

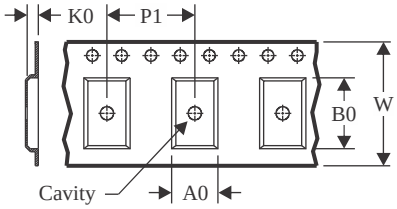

A0	Dimension designed to accommodate the component width
B0	Dimension designed to accommodate the component length
K0	Dimension designed to accommodate the component thickness
W	Overall width of the carrier tape
P1	Pitch between successive cavity centers

QUADRANT ASSIGNMENTS FOR PIN 1 ORIENTATION IN TAPE

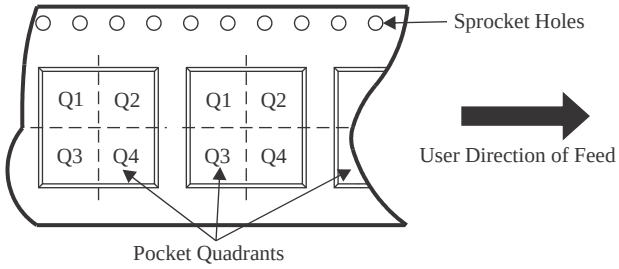

*All dimensions are nominal

Device	Package Type	Package Drawing	Pins	SPQ	Reel Diameter (mm)	Reel Width W1 (mm)	A0 (mm)	B0 (mm)	K0 (mm)	P1 (mm)	W (mm)	Pin1 Quadrant
CD74HC259M96	SOIC	D	16	2500	330.0	16.4	6.5	10.3	2.1	8.0	16.0	Q1
CD74HC259M96G4	SOIC	D	16	2500	330.0	16.4	6.5	10.3	2.1	8.0	16.0	Q1
CD74HCT259M96G4	SOIC	D	16	2500	330.0	16.4	6.5	10.3	2.1	8.0	16.0	Q1

TAPE AND REEL BOX DIMENSIONS

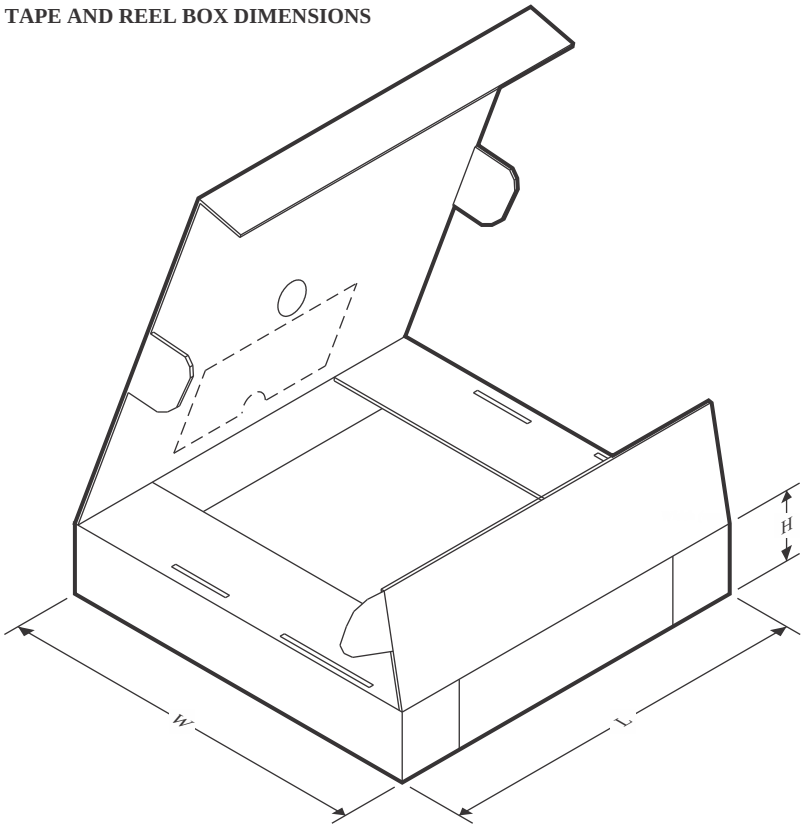

*All dimensions are nominal

Device	Package Type	Package Drawing	Pins	SPQ	Length (mm)	Width (mm)	Height (mm)
CD74HC259M96	SOIC	D	16	2500	340.5	336.1	32.0
CD74HC259M96G4	SOIC	D	16	2500	353.0	353.0	32.0
CD74HCT259M96G4	SOIC	D	16	2500	353.0	353.0	32.0

TUBE

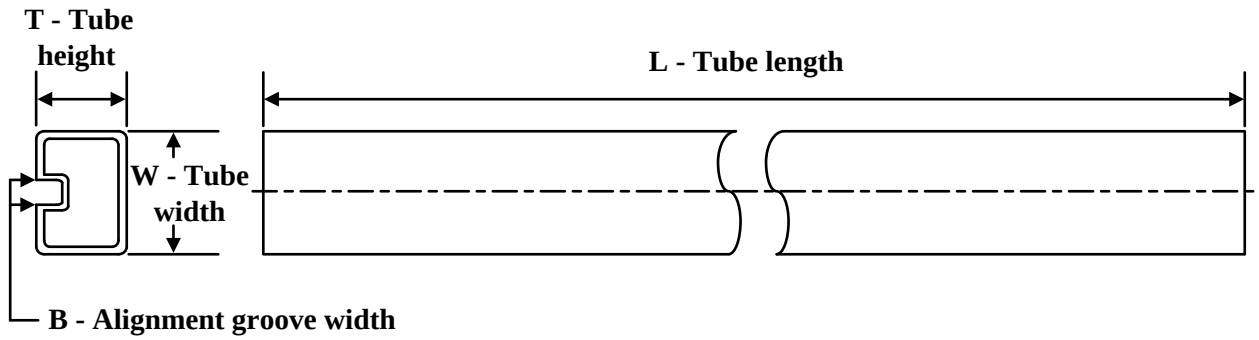

*All dimensions are nominal

Device	Package Name	Package Type	Pins	SPQ	L (mm)	W (mm)	T (µm)	B (mm)
CD74HC259E	N	PDIP	16	25	506	13.97	11230	4.32
CD74HC259E	N	PDIP	16	25	506	13.97	11230	4.32
CD74HC259E.A	N	PDIP	16	25	506	13.97	11230	4.32
CD74HC259E.A	N	PDIP	16	25	506	13.97	11230	4.32
CD74HCT259E	N	PDIP	16	25	506	13.97	11230	4.32
CD74HCT259E	N	PDIP	16	25	506	13.97	11230	4.32
CD74HCT259E.A	N	PDIP	16	25	506	13.97	11230	4.32
CD74HCT259E.A	N	PDIP	16	25	506	13.97	11230	4.32
CD74HCT259EE4	N	PDIP	16	25	506	13.97	11230	4.32
CD74HCT259EE4	N	PDIP	16	25	506	13.97	11230	4.32

D (R–PDSO–G16) PLASTIC SMALL OUTLINE

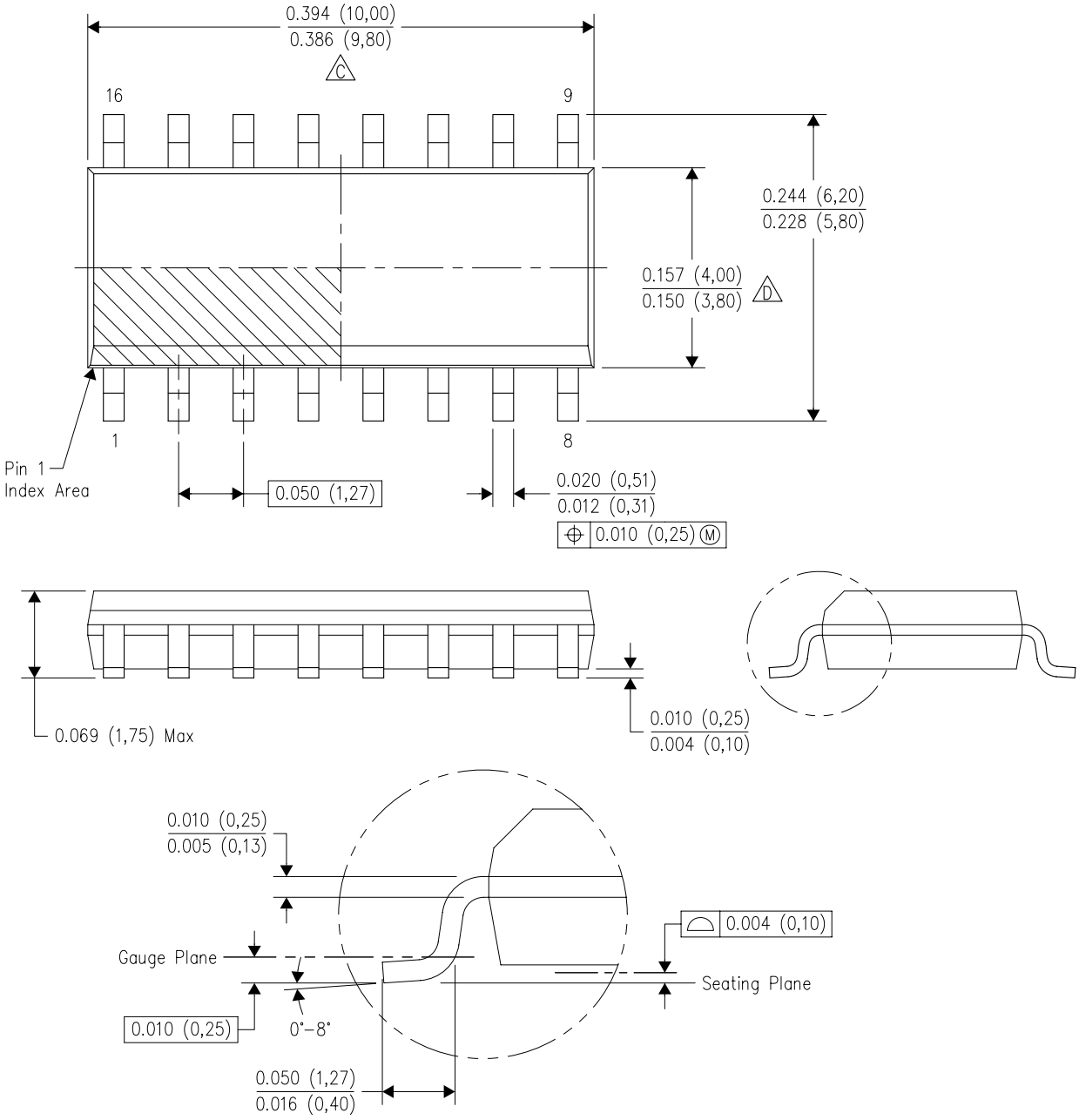

NOTES:
A. All linear dimensions are in inches (millimeters).
B. This drawing is subject to change without notice.
C. Body length does not include mold flash, protrusions, or gate burrs. Mold flash, protrusions, or gate burrs shall not exceed 0.006 (0,15) each side.
D. Body width does not include interlead flash. Interlead flash shall not exceed 0.017 (0,43) each side.
E. Reference JEDEC MS–012 variation AC.

J (R–GDIP–T**)

14 LEADS SHOWN

CERAMIC DUAL IN–LINE PACKAGE

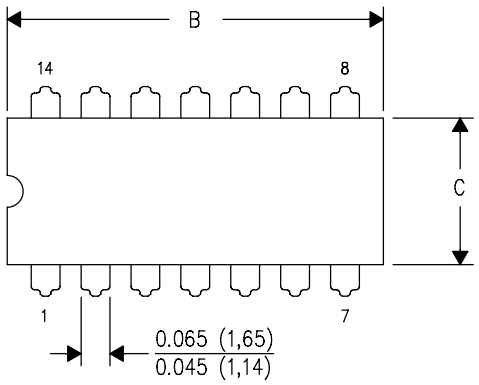

DIM \ PINS **	14	16	18	20
A	0.300 (7,62) BSC	0.300 (7,62) BSC	0.300 (7,62) BSC	0.300 (7,62) BSC
B MAX	0.785 (19,94)	.840 (21,34)	0.960 (24,38)	1.060 (26,92)
B MIN	—	—	—	—
C MAX	0.300 (7,62)	0.300 (7,62)	0.310 (7,87)	0.300 (7,62)
C MIN	0.245 (6,22)	0.245 (6,22)	0.220 (5,59)	0.245 (6,22)

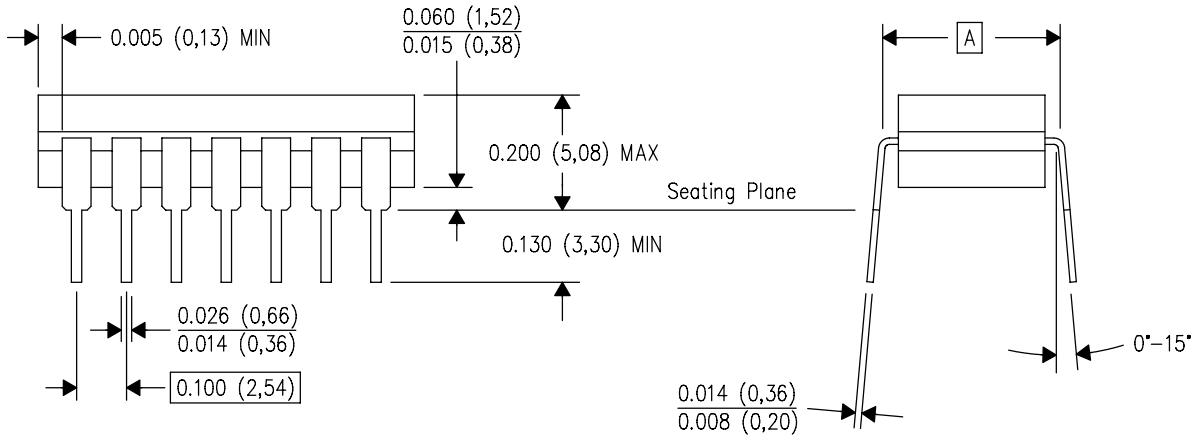

4040083/F 03/03

NOTES:
A. All linear dimensions are in inches (millimeters).
B. This drawing is subject to change without notice.
C. This package is hermetically sealed with a ceramic lid using glass frit.
D. Index point is provided on cap for terminal identification only on press ceramic glass frit seal only.
E. Falls within MIL STD 1835 GDIP1–T14, GDIP1–T16, GDIP1–T18 and GDIP1–T20.

N (R–PDIP–T**)

PLASTIC DUAL–IN–LINE PACKAGE

16 PINS SHOWN

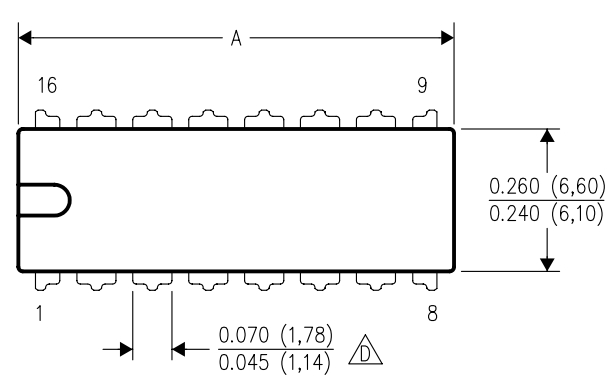

DIM \ PINS **	14	16	18	20
A MAX	0.775 (19,69)	0.775 (19,69)	0.920 (23,37)	1.060 (26,92)
A MIN	0.745 (18,92)	0.745 (18,92)	0.850 (21,59)	0.940 (23,88)
MS–001 VARIATION (C)	AA	BB	AC	AD

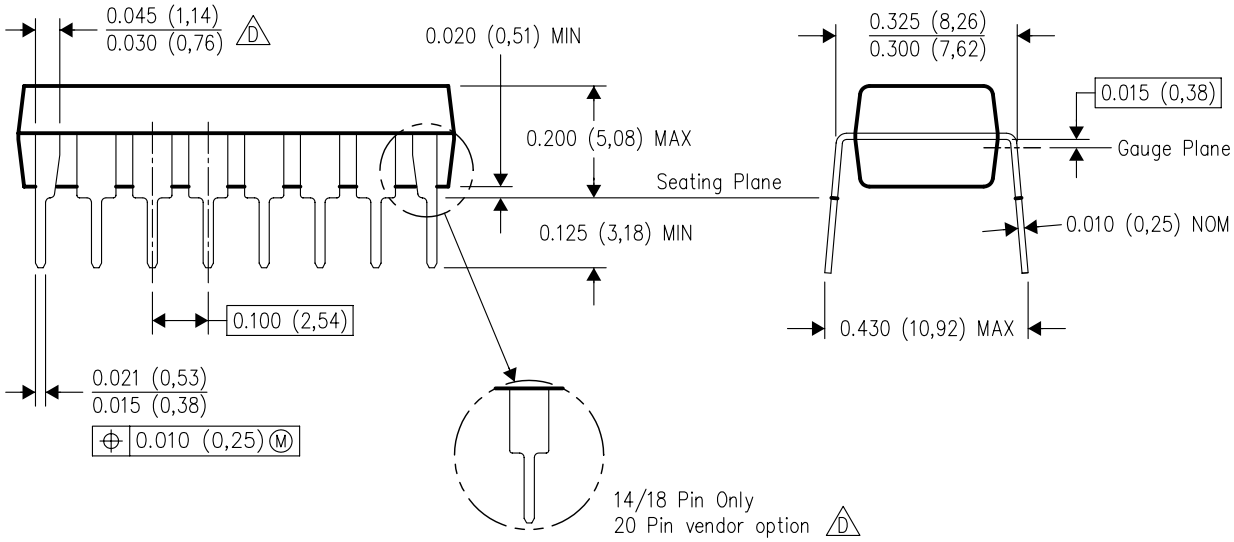

4040049/E 12/2002

NOTES:
A. All linear dimensions are in inches (millimeters).
B. This drawing is subject to change without notice.
C. Falls within JEDEC MS–001, except 18 and 20 pin minimum body length (Dim A).
D. The 20 pin end lead shoulder width is a vendor option, either half or full width.

重要通知和免责声明

TI“按原样”提供技术和可靠性数据（包括数据表）、设计资源（包括参考设计）、应用或其他设计建议、网络工具、安全信息和其他资源，不保证没有瑕疵且不做出任何明示或暗示的担保，包括但不限于对适销性、与某特定用途的适用性或不侵犯任何第三方知识产权的暗示担保。

这些资源可供使用 TI 产品进行设计的熟练开发人员使用。您将自行承担以下全部责任：(1) 针对您的应用选择合适的 TI 产品，(2) 设计、验证并测试您的应用，(3) 确保您的应用满足相应标准以及任何其他安全、安保法规或其他要求。

这些资源如有变更，恕不另行通知。TI 授权您仅可将这些资源用于研发本资源所述的 TI 产品的相关应用。严禁以其他方式对这些资源进行复制或展示。您无权使用任何其他 TI 知识产权或任何第三方知识产权。对于因您对这些资源的使用而对 TI 及其代表造成的任何索赔、损害、成本、损失和债务，您将全额赔偿，TI 对此概不负责。

TI 提供的产品受 TI 销售条款)、TI 通用质量指南 或 ti.com 上其他适用条款或 TI 产品随附的其他适用条款的约束。TI 提供这些资源并不会扩展或以其他方式更改 TI 针对 TI 产品发布的适用的担保或担保免责声明。 除非德州仪器 (TI) 明确将某产品指定为定制产品或客户特定产品，否则其产品均为按确定价格收入目录的标准通用器件。

TI 反对并拒绝您可能提出的任何其他或不同的条款。

版权所有 © 2026，德州仪器 (TI) 公司

最后更新日期：2025 年 10 月